myprojectorlamps.com

The most trusted, dependable name in projector lamp sales.

http://www.myprojectorlamps.com

http://www.myprojectorlamps.ca

http://www.myprojectorlamps.eu

The following projector manual has not been modified or altered in any way.

PROJECTOR
User's Manual

H9080FD

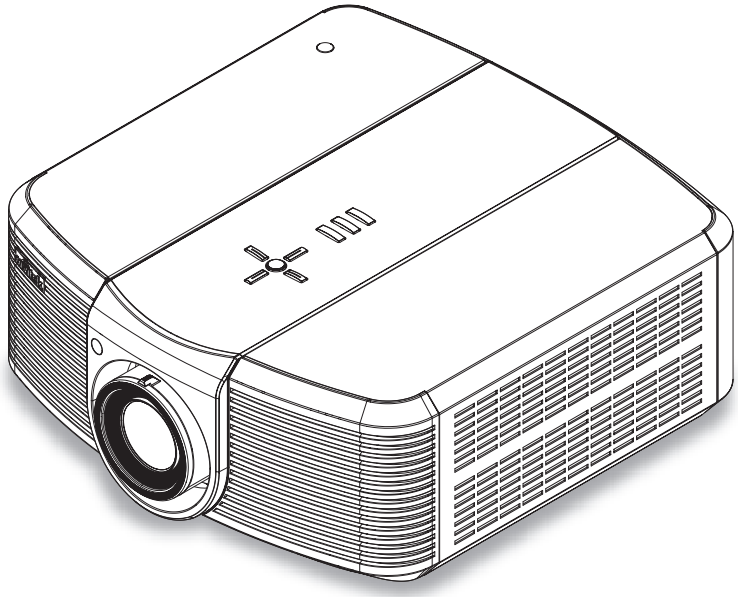

TABLE OF CONTENTS

Copyright Information **4**

Copyright *4*

Disclaimer *4*

About this manual *4*

Important Safety Instructions **5**

FCC PART 15: *6*

INDUSTRY CANADA (ICES-003): *6*

DISPOSAL OF OLD ELECTRICAL AND ELECTRONIC EQUIPMENT *6*

Introduction **7**

1.1 About This Manual 7

Target Audience *7*

Textual and Graphic Conventions *7*

1.2 Using This Manual 8

1.3 Description, Features and Benefits 9

Key Features and Benefits *9*

Additional Features of the H9080FD *10*

Parts List *10*

Controls and Functions **11**

2.1 H9080FD at a Glance 11

2.2 H9080FD I/O Panel 13

2.3 H9080FD Key Pad 14

2.4 H9080FD Remote Control 15

Installation **16**

3.1 Remote Control 16

Notes on Batteries *16*

Notes on Remote Control Operation *17*

3.2 Installation Considerations 18

Installation Type *18*

Ambient Light *18*

Throw Distance *19*

Vertical and Horizontal Position *20*

Folded Optics *21*

Other Considerations *21*

Lens Shift *22*

3.3 Mounting the H9080FD 24
Floor Mounting (Upright) *24*
Ceiling Mounting (Inverted) *24*
Adjusting the Projection Angle *24*
3.4 Connections to the H9080FD 25
Connecting Source Components to the H9080FD *25*
RS-232 Controller Connection *29*
Connecting an External IR Receiver *30*
Connecting to AC Power *30*
3.5 Turning on the Power 31
3.6 Changing the OSD Language 31
3.7 Adjusting the Picture Orientation 31
Rear Projection *31*
Ceiling Mode *31*
3.8 Lens Adjustments 32
Focus *32*
Zoom *32*
Lens Shift *33*
Operation 34
4.1 Selecting an Aspect Ratio 34
4.2 Selecting An Input Source 34
4.3 Using the On-Screen Menus 34
GENERAL *36*
IMAGE *40*
ADVANCED *48*
SETUP *52*
INFO *54*
Maintenance and Troubleshooting 55
5.1 Cleaning the Intake and Exhaust Vents 55
Cleaning the Air Vents *55*
5.2 Troubleshooting Tips 56
Serial Interface Specifications 57
6.1 Transfer Specifications 57
6.2 RS-232 Commands 58
Specifications 65
7.1 H9080FD Specifications 65
7.2 H9080FD Dimensions 67
7.3 Supported Timings 68
7.4 Projection Distance and Screen Size 70

COPYRIGHT INFORMATION

Copyright

This publication, including all photographs, illustrations and software, is protected under international copyright laws, with all rights reserved. Neither this manual, nor any of the material contained herein, may be reproduced without written consent of the manufacturer.

The Vivitek logo is a trademark of “Vivitek Corporation.”

© Copyright 2009

Disclaimer

The information in this document is subject to change without notice. The manufacturer makes no representations or warranties with respect to the contents hereof and specifically disclaims any implied warranties of merchantability or fitness for any particular purpose. The manufacturer reserves the right to revise this publication and to make changes from time to time in the content here without obligation of the manufacturer to notify any person of such revision or changes.

About this manual

This manual is intended for end users and describes how to install and operate the DLP projector. Wherever possible, relevant information such as an illustration and its description has been kept on one page. This printer-friendly format is both for your convenience and to help save paper, thereby protecting the environment. It is suggested that you only print sections that are relevant to your needs.

IMPORTANT SAFETY INSTRUCTIONS

Thank you for your purchase of this quality product! For best performance, please read this manual carefully as it is your guide through the menus and operation.

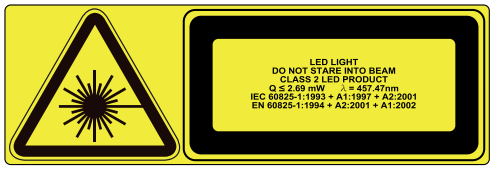

1. Read these instructions.
2. Keep these instructions.
3. Heed all warnings.
4. Follow all instructions.
5. Do not use this apparatus near water.
6. Clean only with a dry cloth.
7. Do not block any of the ventilation openings. Install in accordance with the manufacturer's instructions.
8. Do not install near any heat sources such as radiators, heat registers, stoves, or other apparatus (including amplifiers) that produce heat.
9. Do not defeat the safety purpose of the polarized or grounding type plug. A polarized plug has two blades with one wider than the other. A grounding type plug has two blades and a third grounding prong. The wide blade or the third prong is provided for your safety. When the provided plug does not fit into your outlet, consult an electrician for the replacement of the obsolete outlet.
10. Protect the power cord from being walked on or pinched particularly at plugs, convenience receptacles and the point where they exit from the apparatus.
11. Only use the attachments/accessories specified by the manufacturer.
12. Use only with a cart, stand, tripod, bracket or table specified by the manufacturer or sold with the apparatus. When a cart is used, use caution when moving the cart/apparatus to avoid injury from tip-over.

13. Unplug this apparatus during lightning storms or when unused for long periods of time.
14. Refer all servicing to qualified service personnel. Servicing is required when the apparatus has been damaged in any way, such as power supply cord or plug is damaged, liquid has been spilled or objects have fallen into the apparatus, the apparatus has been exposed to rain or moisture, does not operate normally, or has been dropped.
15. The +12V trigger only outputs 12Vdc signal for triggering. Do not connect to any other power input or output. This could cause damage to this unit.
16. Keep the packing material in case the equipment should ever need to be shipped.
17. This is a Class II LED Product. Never look into the lens when the projector is on.

FCC PART 15:

NOTE: This equipment has been tested and found to comply with the limits for a Class B digital device, pursuant to Part 15 of the FCC Rules. These limits are designed to provide reasonable protection against harmful interference in a residential installation.

This equipment generates, uses and can radiate radio frequency energy and, if not installed and used in accordance with the instructions, may cause harmful interference to radio communications. However, there is no guarantee that interference will not occur in a particular installation. If this equipment does cause harmful interference to radio or television reception, which can be determined by turning the equipment off and on, the user is encouraged to try to correct the interference by one or more of the following measures:

- Re-orient or relocate the receiving antenna.
- Increase the separation between the equipment and receiver.
- Connect the equipment into an outlet on a circuit different from that to which the receiver is connected.
- Consult the dealer or an experienced radio/TV technician for help.

INDUSTRY CANADA (ICES-003):

This Class B digital apparatus complies with Canadian ICES-003.

Cet appareil numérique de la classe B est conforme à la norme NMB-003 du Canada.

DISPOSAL OF OLD ELECTRICAL AND ELECTRONIC EQUIPMENT

(Applicable throughout the European Union and other European countries with separate collection programs)

This symbol found on your product or on its packaging, indicates that this product should not be treated as household waste when you wish to dispose of it. Instead, it should be handed over to an applicable collection point for the recycling of electrical and electronic equipment. By ensuring this product is disposed of correctly, you will help prevent potential negative consequences to the environment and human health, which could otherwise be caused by inappropriate disposal of this product. The recycling of materials will help to conserve natural resources. This symbol is only valid in the European Union. If you wish to discard this product, please contact your local authorities or dealer and ask for the correct method of disposal.

INTRODUCTION 1

1.1 About This Manual

This User's Manual describes how to install, set up and operate the H9080FD.

Throughout this manual, the Projector is referred to as the "H9080FD."

Target Audience

Vivitek has prepared this manual to help installers and end users get the most out of the H9080FD.

Vivitek has made every effort to ensure that this manual is accurate as of the date it was printed. However, because of ongoing product improvements and customer feedback, it may require updating from time to time. You can always find the latest version of this and other Vivitek product manuals on-line, at www.vivitekcorp.com.

Textual and Graphic Conventions

Text Conventions: The following conventions are used in this manual, in order to clarify the information and instructions provided:

- Remote and built-in keypad button identifiers are set in upper-case bold type; for example, "Press **ENTER** to return to the previous menu."
- **<Enter>** indicates that you may press the **ENTER** key on your key pad.

In addition to these conventions, underlining, boldface and/or italics are occasionally used to highlight important information.

Graphic Conventions: These symbols appear in numerous places throughout the manual, to emphasize points that you must keep in mind to avoid problems with your equipment or injury:

Tip	TIPS highlight time-saving short cuts and helpful guidelines for using certain features.
Note	NOTES emphasize text with unusual importance or special significance. They also provide supplemental information.
Caution	CAUTIONS alert users that a given action or omitted action can degrade performance or cause a malfunction.
WARNING	WARNINGS appear when a given action or omitted action can result in damage to the equipment, or possible non-fatal injury to the user.
DANGER!	DANGER appears when a given action can cause severe injury or death.

1.2 Using This Manual

Use the following table to locate the specific information you need in this manual.

If you need...	... Turn to page:
General information about the H9080FD 1080p DLP Projector	9
Installation instructions	16
OSD Operation	35
Troubleshooting tips	56
Specifications for the H9080FD 1080p DLP Projector	65

1.3 Description, Features and Benefits

The Vivitek H9080FD provides state-of-the-art technology for 1080P picture performance, Full HD (1920 x 1080) native resolution for crystal clear, pristine images. The H9080FD offers incredibly high definition images at today's highest available resolutions.

Equipped with precision optics, the H9080FD includes zoom, focus and lens shift controls for a throw range of 1.85:1 to 2.40:1. For a smaller throw distance (1.56:1 to 1.86:1), the H9080FD can be fitted with a varying optics package (optional) to meet different requirements.

Exceptional scaling and film-to-video (3:2 pull-down) conversion is easily achieved. Combined with Vivitek's sophisticated parameters for white balancing, the H9080FD's proprietary de-interlacing technology provides the highest level of development for gray-scale and color balancing and artifact-free images.

Completing this engineering marvel are discrete infrared (IR) and RS-232 control, power and source selection controls for seamless, flexible operation.

Key Features and Benefits

The H9080FD offers these key features and benefits:

- Native Resolution: 1920 x 1080 (16:9 Native Aspect Ratio)
- DLP system using high-performance Digital Micromirror Device (DMD)
- Two (2), HDMI 1.3 Inputs with High-bandwidth Digital Content Protection (HDCP)
- HDTV Compatible
- Wide Color Gamut: H9080FD can provide a 25% wider color gamut than NTSC or 77% wider than REC 709.
- Excellent Video Processing on progressive and interlaced video inputs.
- Green Product with:
  - Lead free solder used for soldering including circuit and component electronics.
  - Lead free glasses and coatings.
  - Recycled paper used in the user manuals and packing cartons.
- Instant Hot Restart requires no cool down period before re-starting the projector.
- Energy Saving: High efficiency power switching and less than 1W power consumption in standby mode.

Additional Features of the H9080FD

- Horizontal and vertical lens shift

Parts List

Your H9080FD is shipped with the following items. If any items are missing or damaged, please contact your dealer or Vivitek Customer Service.

- H9080FD DLP Projector
- Remote Control Unit and two (2) AA-size batteries
- AC Power Cords
- HDMI Cable
- Allen Wrench (for lens shift adjustment)
- Component Cable
- Lens Cap
- User manual (English Hard Copy)
- CD
- Warranty Card
- Inspection Card (China Only)
- Quick Guide

CONTROLS AND FUNCTIONS 2

2.1 H9080FD at a Glance

Figure 2-1 and Figure 2-2 show the key H9080FD components.

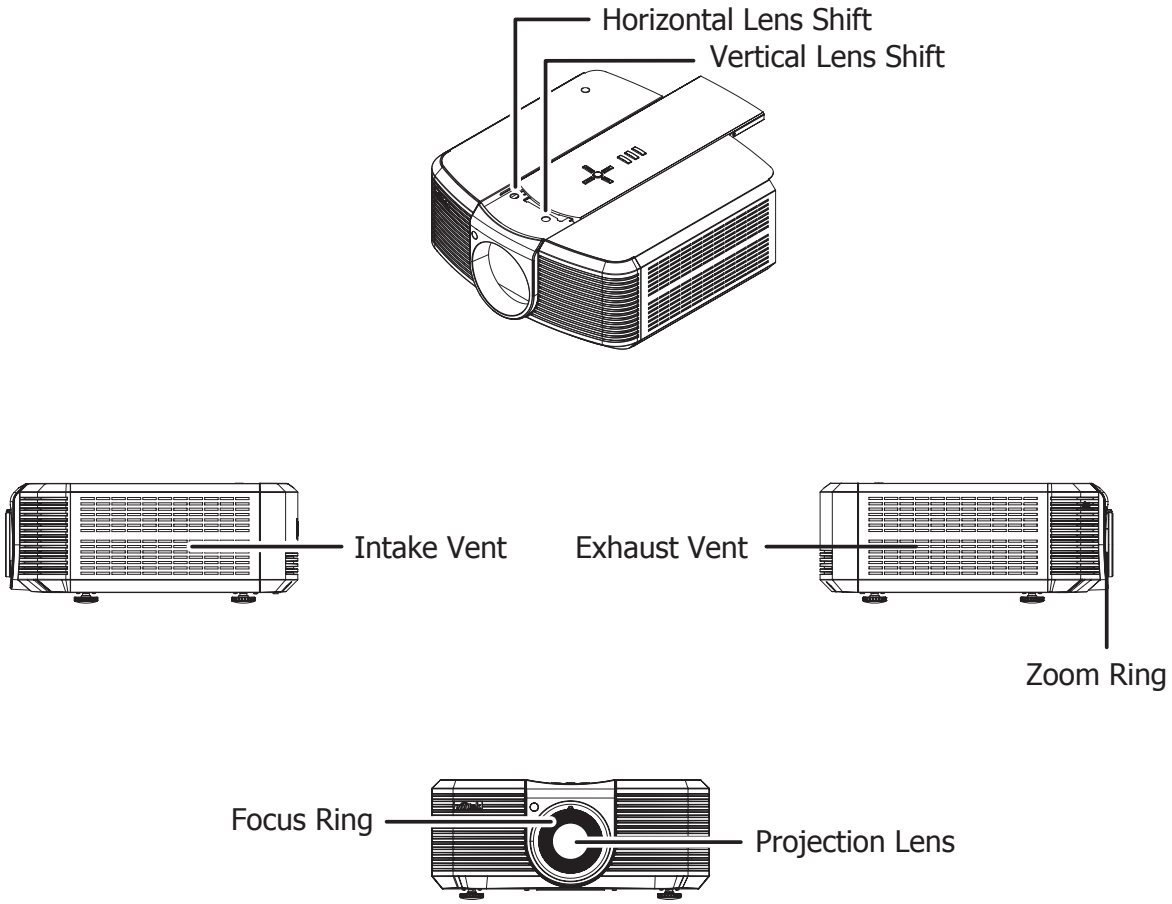

Figure 2-1: H9080FD Front/Side View

- EXHAUST VENT
  Warm air exits the projector through this vent. Ensure that it is not blocked.
- INTAKE VENT
  Internal fans draw cool air into the projector through this vent.
- ZOOM RING
  Rotate this to change the projected image size.
- FOCUS RING
  Rotate this to focus the projected image.
- PROJECTION LENS
  - Standard throw range (1.85 to 2.40:1)
  - Short throw range (1.56 to 1.86:1) (Optional)

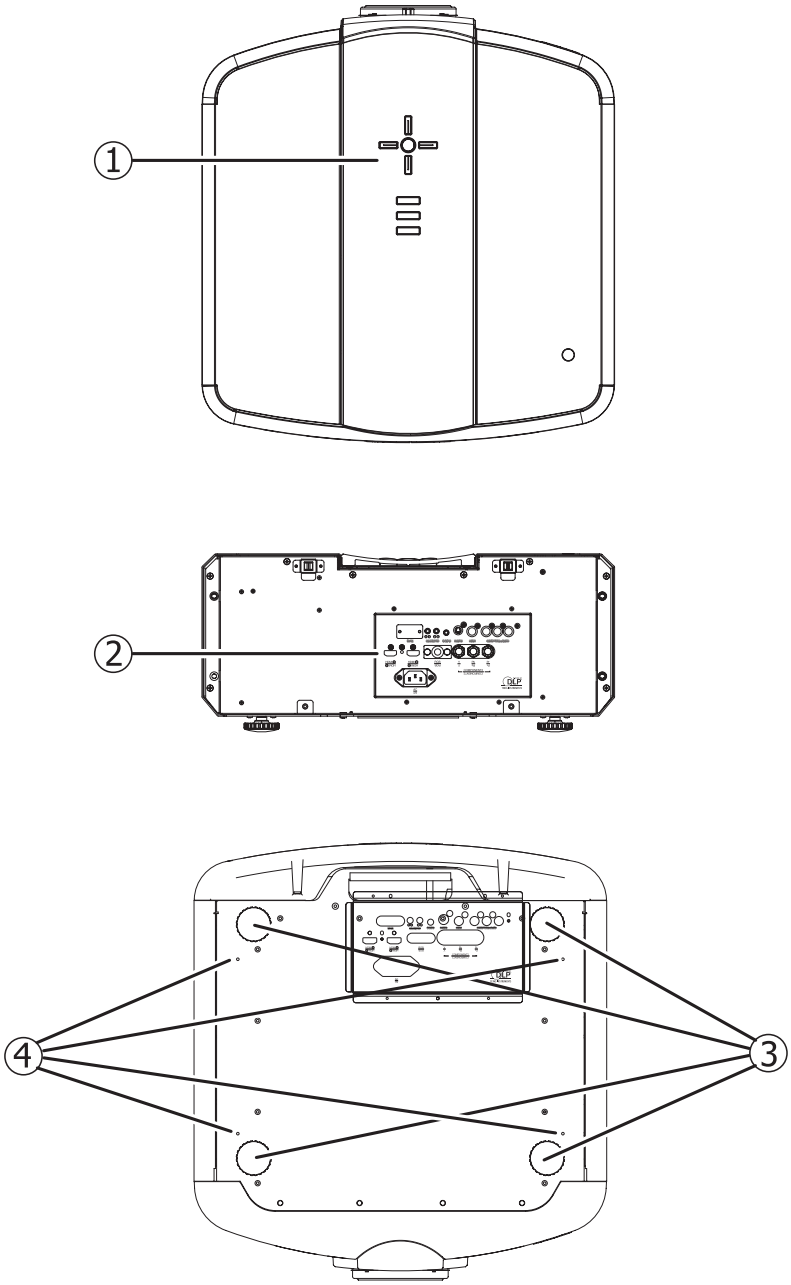

Figure 2-2: H9080FD Top/ Rear/ Bottom View

1. KEY PAD
   Initiate On Screen Display (OSD) menu and access control buttons for projector adjustment.
2. I/O PANEL
   Connect input and output devices to these ports.
3. ADJUSTABLE FEET
   Use these when the projector is installed in a table-top configuration to level the image and/or adjust the projection angle.
4. CEILING MOUNT HOLES
   Use these to attach the ceiling bracket to the projector.

2.2 H9080FD I/O Panel

Figure 2-3 shows the H9080FD I/O panel.

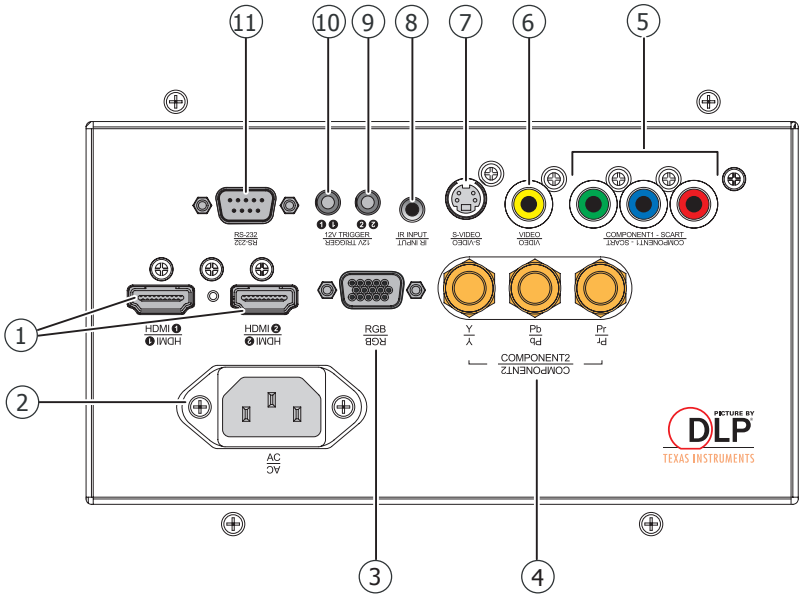

Figure 2-3: H9080FD I/O Panel

1. HDMI 1 (Digital)
   HDMI 2 (Digital)
   HDCP-compliant digital video inputs for connecting an HDMI or DVI source.
2. POWER INPUT (100 to 240 VAC)
   Connect the H9080FD to power here.
3. RGB
   Provides a standard, 15-pin VGA-style connection to either an RGB or component high-definition source, or to a personal computer. The H9080FD automatically detects the input signal resolution.
4. COMPONENT 2
   Three BNCs for connecting component (YPbPr) video sources.
5. COMPONENT 1/SCART (RCA connectors)
   Standard- or high-definition (480i/480p/576i/576p/720p/1080i/1080p) Component (YPbPr) input for connecting a DVD/HD-DVD/BD player, HD set-top box or other SD/HD source. Also provides RGB input for RGBS sources.
6. VIDEO
   Standard composite video input for connecting a VCR, laser disc player or other composite video source. Also provides composite sync input for RGBS sources.
7. S-VIDEO
   A standard S-Video input for connecting a DVD player, satellite receiver or Super VHS (S-VHS) VCR.
8. IR INPUT
   Wired input from a Niles- or Xantech-compatible, infrared (IR) repeater system.
9. TRIGGER 2 (3.5-mm, mini phono jack)
   Provides 12 (+/- 1.5) volt switched output for screen relays with 250mA current capacity and short protection.
10. TRIGGER 1
    Provides 12 (+/- 1.5) volt switched output for screen relays with 250mA current capacity and short protection.
11. RS-232
    A female, 9-pin D-sub connector for interfacing with a PC or home theater automation/control system.

2.3 H9080FD Key Pad

Figure 2-4 shows the H9080FD key pad, and the paragraphs that follow describe its functionality.

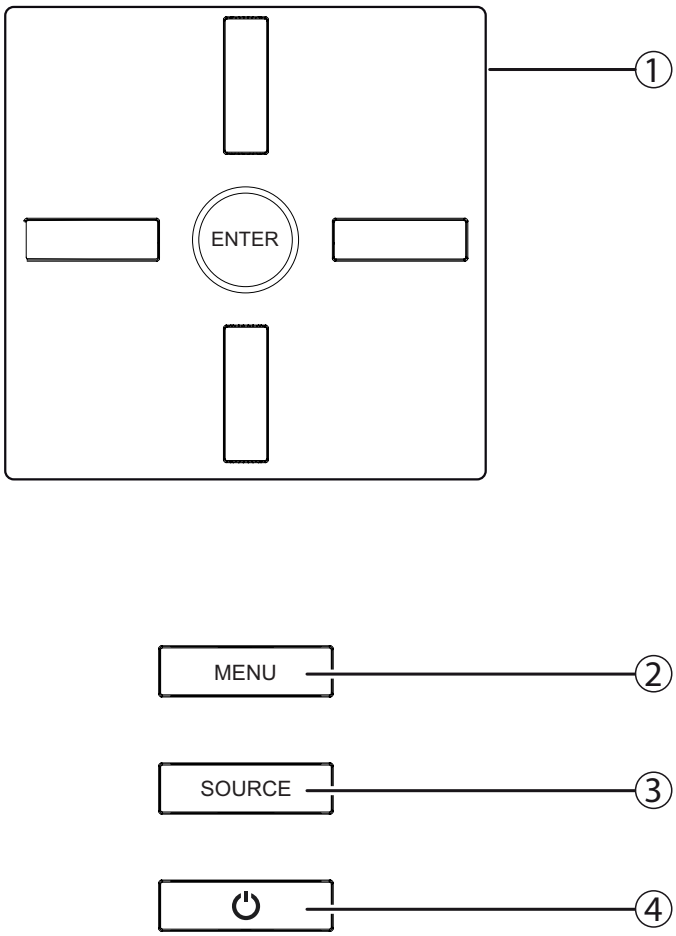

1. Cursor Keys (▲ , ◀ , ▼ , ▶):
   Use these buttons to select items or settings, adjust settings or switch display patterns.

   ENTER: Press to select a highlighted menu item or confirm a changed setting.
2. MENU:
   Press this button to show or hide the OSD menu.
3. SOURCE:
   Press to select a video source.
   HDMI1, HDMI2, RGB, COMP1, COMP2, VIDEO or S-VIDEO.
4. Power:
   Use the button to turn on/off the projector.

Figure 2-4: H9080FD Key Pad

2.4 H9080FD Remote Control

Figure 2-5 shows the H9080FD remote control, and the paragraphs that follow describe its functionality.

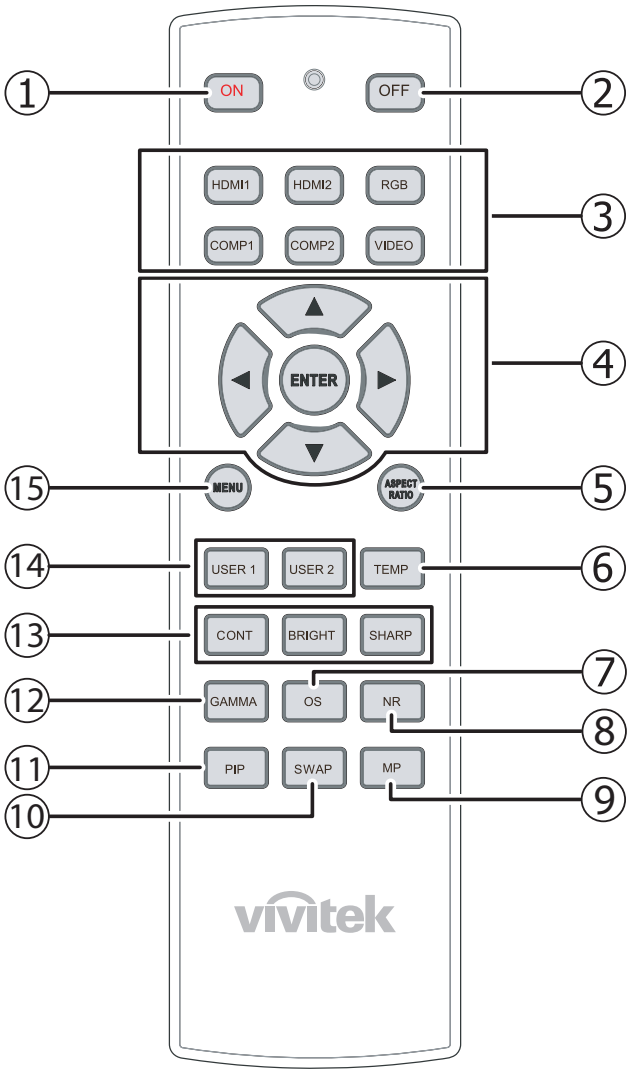

Figure 2-5: H9080FD Remote Control

1. ON: Use this button to turn the projector on.
2. OFF: Use this button to turn the projector off.
3. Source Selection Buttons:
   Press to select a video source.
   HDMI1, HDMI2, RGB, COMP1, COMP2, VIDEO or S-VIDEO.
4. Cursor Keys (▲ , ◀ , ▼ , ▶):
   Use these buttons to select items or settings, adjust settings or switch display patterns.

   ENTER: Press to select a highlighted menu item or confirm a changed setting.
5. Aspect Ratio Selection Button: Press this button repeatedly to select one of the following aspect ratios:

   • 16 : 9: For viewing 16:9 DVDs or HDTV programs in their native aspect ratio.
   • Letterbox: For viewing LaserDisc movies or non-anamorphic DVDs on a 16:9 screen.

   • 4 : 3: Scales the input signal to fit 4:3 sources in the center of the screen.

   • 4:3 Narrow: Scales the input signal to fit 4:3 sources in the center of the screen when using an anamorphic lens.

   • Native: Displays source image in its native resolution without re-sizing or overscan.
6. TEMP: Press this button to adjust the color temperature.
7. OS: Press this button to switch to the next Overscan mode.
8. NR: Press this button to show or hide the Noise Reduction slider.
9. MP: Press this button to select where the OSD menus display on the screen.
10. SWAP: Press this button to swap the PIP image with active source image.
11. PIP: Press this button to switch to the next PIP image.
12. GAMMA: Press this button to switch to the next Gamma setting.
13. CONT, BRIGHT, SHARP:
    Press these buttons to show or hide the Contrast, Brightness, and Sharpness sliders.
14. USER 1, USER 2: Press these buttons to recall preset User display settings 1 and 2.
15. MENU: Press this button to show or hide the OSD menu.

3 INSTALLATION

3.1 Remote Control

To install batteries in the remote control:

1. Slide the battery compartment cover in the direction of the arrow to remove it.
2. Install two AA batteries with the correct polarity.
3. Replace the cover.

1.
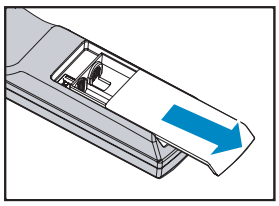

2.
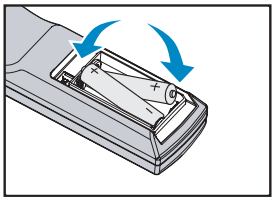

3.
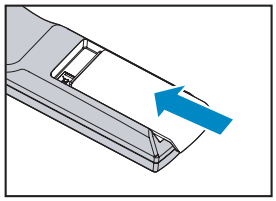

Notes on Batteries

- Make sure that the battery polarities are correct when installing the batteries.
- Do not mix an old battery with a new one or different types of batteries.
- If you will not use the remote control for a long time, remove the batteries to avoid damage from battery leakage.

Notes on Remote Control Operation

- In most situations, you can simply point the remote control at the screen which will reflect the IR signal from the remote back toward the IR receiver on the projector. In some cases, however, ambient conditions may prevent this. If so, point the remote control at the projector and try again.
- If the effective range of the remote control decreases, or it stops working, replace the batteries with new ones.
- The remote control may fail to operate if the infrared remote sensor is exposed to bright sunlight or fluorescent lighting.

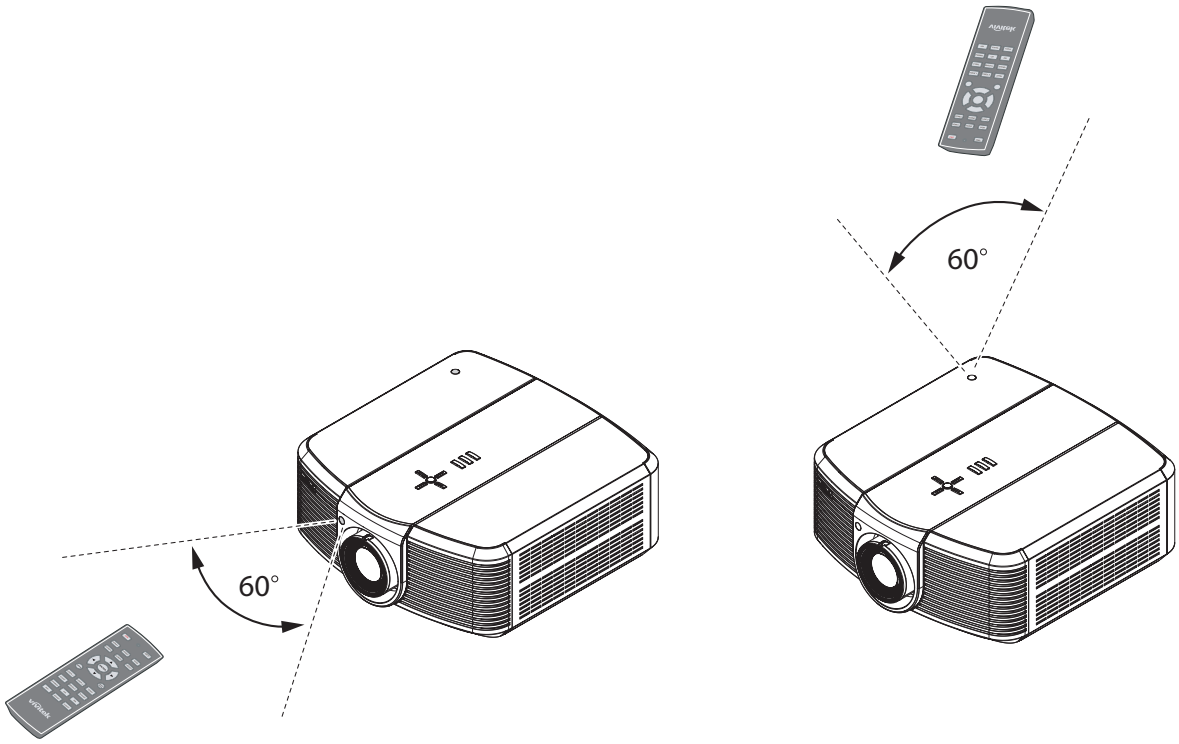

Figure 3-1: IR Reception Angles

3.2 Installation Considerations

Proper installation of your projector will ensure the quality of your display. Whether you are installing a projector temporarily or permanently, you should take the following into account to ensure your projector performs optimally.

Installation Type

Choose the installation type that best suits your needs: front or rear screen, floor mount or inverted mount. Table 3-1 compares these various installation methods.

Advantages	Considerations
Front Screen, Floor Mount Installation	
• Easy to set up • Can be moved or changed quickly • Easy to access	• Shares floor space with audience
Front Screen, Inverted Mount (ceiling) Installation	
• Does not take up audience space • Projector is unobtrusive • Projector cannot be accidentally moved	• Installation is more permanent • Projector access is more difficult
Rear Screen, Floor Mount Installation	
• Projector is completely hidden • Projector is easily accessed • Usually good ambient light rejection	• Requires separate room • Installation cost is usually higher
Rear Screen, Inverted Mount (ceiling) Installation	
• Projector is completely hidden • Usually good ambient light rejection	• Requires separate room • Installation cost is usually higher
Rear Screen, Floor Mount with Mirror	
• Projector is completely hidden • Usually good ambient light rejection • Requires less space behind screen than other rear screen installations	• Requires separate room • Installation cost is usually higher

Table 3-1: Projector Installation Options

Ambient Light

In general, minimize or eliminate light sources directed at the screen. Contrast ratio in your images will be noticeably reduced if light directly strikes the screen, such as when a shaft of light from a window or floodlight falls on the image. Images may then appear washed out and less vibrant.

Throw Distance

Throw distance is the distance measured from the front of the projector to the screen. This is an important calculation in any projector installation as it determines whether or not you have enough room to install your projector with a desired screen size and if your image will be the right size for your screen.

You can quickly estimate the throw distance by taking the width of the screen and multiplying it by the lens throw ratio; see Figure 3-2. The result of this calculation tells you roughly how far back the projector should be positioned from the screen in order to project a focused image large enough to fill the screen.

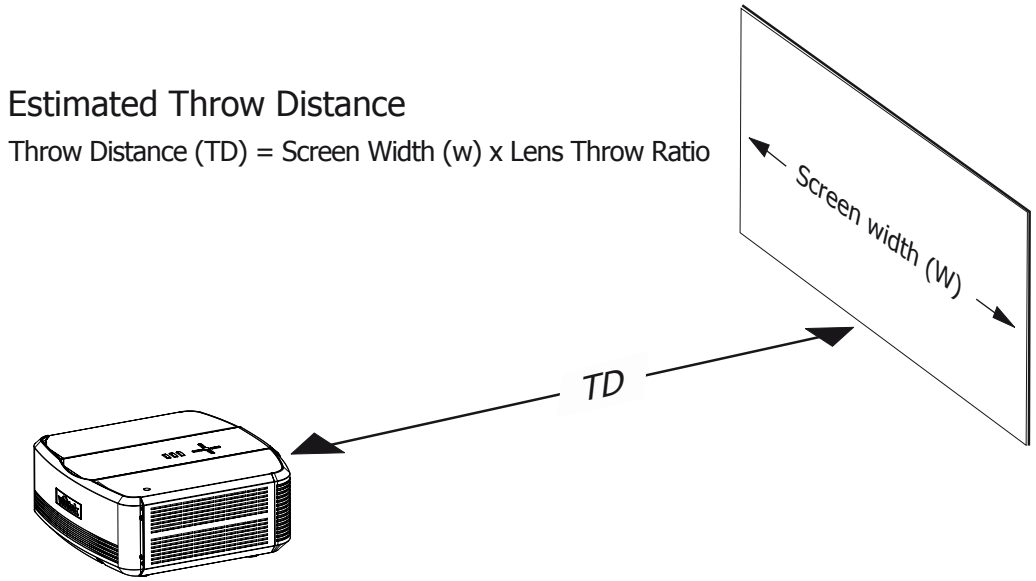

Figure 3-2: Estimated Throw Distance

Two models of the H9080FD are available, one with 1.56-1.86:1 lens (PA03500-002) and the other with 1.85-2.40:1 lens (PA03500-001). With optional zoom adaptors throw ratios of 1.24 – 3.0 can be achieved.

The standard H9080FD offers throw ratios between 1.85:1 and 2.40:1.

With the optional, short-throw lens, the H9080FD offers throw ratios between 1.56:1 and 1.86:1.

Vertical and Horizontal Position

Proper placement of the projector relative to the screen will yield a rectangular, perfectly-centered image that completely fills the screen.

Ideally, the projector should be positioned perpendicular to the screen.

The lens center should be aligned with either the top or bottom edge of the screen areas. The lens should be centered in the middle of the screen. See Figure 3-3.

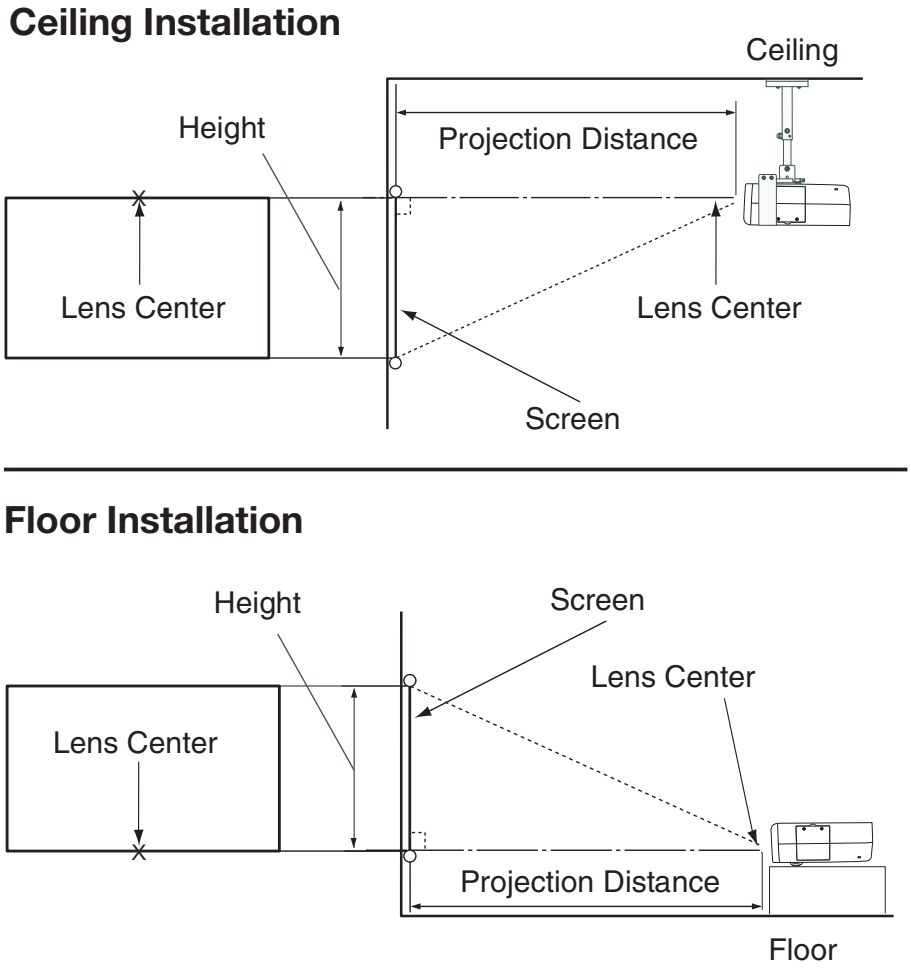

Figure 3-3: Projector Placement

When installing, ensure that you use only UL Listed ceiling mounts.

For ceiling installations, use approved mounting hardware and M4 screws with a maximum screw depth of 8 mm (0.31inch).

The construction of the ceiling mount must be of suitable shape and strength. The ceiling mount load capacity must exceed the weight of the installed equipment, and as an additional precaution be capable of withstanding three times the weight of the equipment (not less than 48 kg) over a period of 60 seconds.

Folded Optics

In rear-screen applications where space behind the projector is limited, a mirror may be used to fold the optical path, as shown in Figure 3-4. The position of the projector and mirror must be accurately set. If you are considering this type of installation, contact your dealer for assistance.

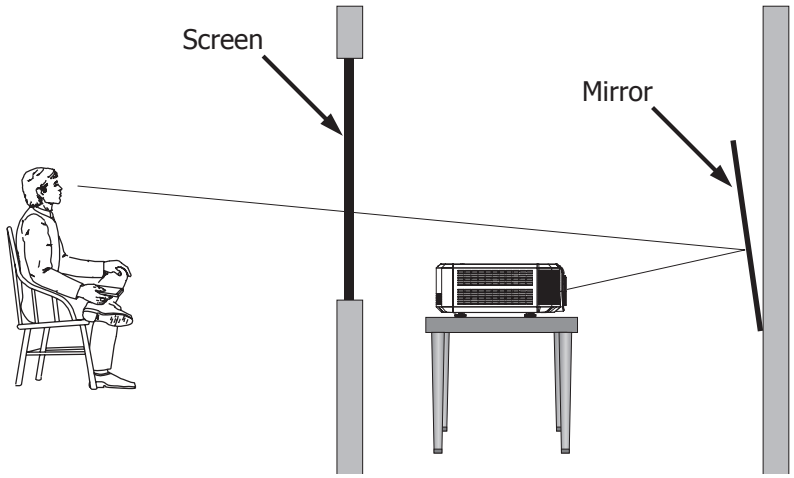

Figure 3-4: Folded Optics

Other Considerations

Other considerations and tips that can help improve your installation:

- Keep the ambient temperature constant and below 35°C (95°F). Keep the projector away from heating and/or air conditioning vents. Changes in temperature may cause drifts in the projector circuitry, which may affect performance.
- Keep the projector away from devices that radiate electromagnetic energy such as motors and transformers. Common sources of these include slide projectors, speakers, power amplifiers and elevators.
- Utilize optical offset prior to tilting or aiming projector at screen.
- Keep optics, lens and port glass clean for best performance and image quality.

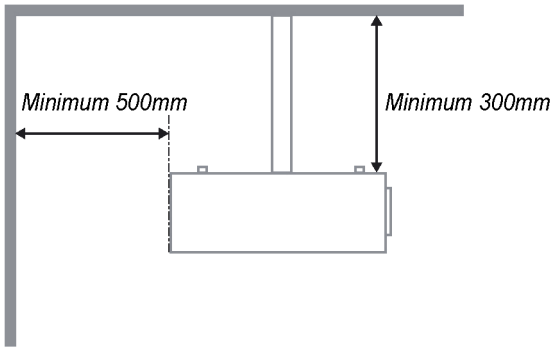

Note

- Allow at least 50 cm clearance around the exhaust vent.
- Ensure that the intake vents do not recycle hot air from the exhaust vent.

Lens Shift

The H9080FD has a lens shift capability which allows the vertical movement of the image without moving the projector. Lens shift is generally expressed as a percentage of the screen height. For ceiling mounted projectors, the lens can be moved 120% (0.6V) downward, while the lens can be moved 120% (0.6V) up or down on a desktop mounted projector.

Vertical Lens Shift:

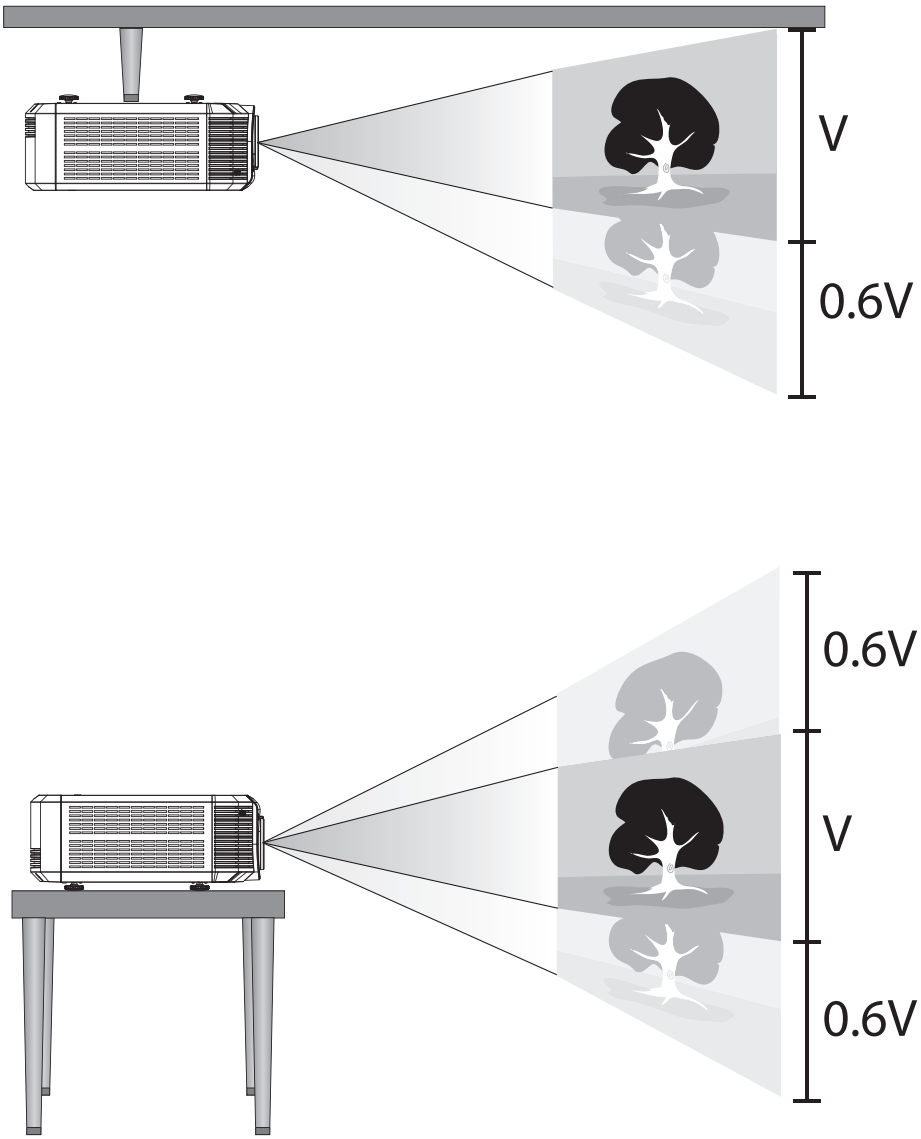

Note

This is a general example of lens shift. Lenses vary in their shift capabilities. No particular lens or projector is used in this example.

Figure 3-5: Vertical Lens Shift (Example Only)

Horizontal Lens Shift:

The H9080FD has a lens shift capability which allows the horizontal movement of the image without moving the projector. The lens can be moved 30% (0.15H) to the right or left within the housing.

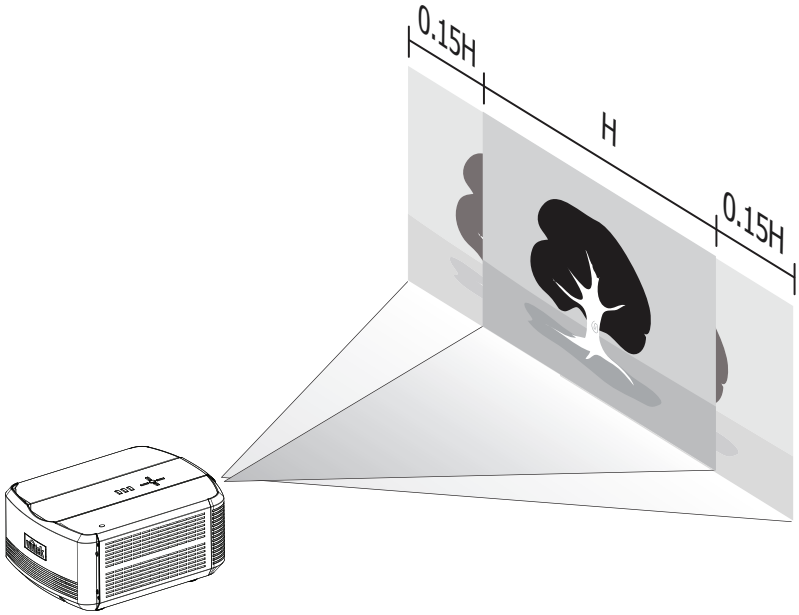

Note

This is a general example of lens shift. Lenses vary in their shift capabilities. No particular lens or projector is used in this example.

Figure 3-6: Horizontal Lens Shift (Example Only)

Note

1. With no vertical or horizontal lens shift, the lens center and screen center are aligned with each other.
2. Vertical shift limits are percentages of the screen height. Horizontal shift limits are percentages of the screen width.
3. Vertical lens shift figures are for ceiling mount configurations. For floor installations (where the projector is upright), reverse the up/down vertical lens shift percentages.

3.3 Mounting the H9080FD

There are several methods for mounting the projector. Depending on your chosen installation, one method may be more suitable than another.

Floor Mounting (Upright)

In typical front and rear screen installations, the projector can be mounted to a secure and level surface such as a table or cart. Carts are useful when moving a projector during a presentation or from site to site. If possible, lock the wheels when it's in position to prevent it from being moved during a presentation.

Ceiling Mounting (Inverted)

For fixed installations, and for those that want the projector out of sight or have a limited space for projector and audience, you can invert the H9080FD and suspend it from the ceiling using a specially-designed ceiling mount fixture.

Note

Use only the Vivitek-approved ceiling mount kit designed for your projector. Install the mount kit according to the instructions provided with it.

Note

When installing, ensure that you use only UL Listed ceiling mounts.

For ceiling installations, use approved mounting hardware and M4 screws with a maximum screw depth of 8 mm (0.31inch).

The construction of the ceiling mount must be of suitable shape and strength. The ceiling mount load capacity must exceed the weight of the installed equipment, and as an additional precaution be capable of withstanding three times the weight of the equipment (not less than 48 kg) over a period of 60 seconds.

Adjusting the Projection Angle

If the screen is significantly higher or lower than the projector, you can also tilt the projector at a slight angle. In a ceiling installation, you do this by adjusting the ceiling mount.

For a floor installation, turn the adjustable feet at the bottom of the projector to adjust the projection angle.

If you do this, you may need to vertically shift the image to compensate. For detailed instructions, refer to Lens Adjustments on page 32.

3.4 Connections to the H9080FD

Proceed as follows to connect the H9080FD to your video sources, external controller(s) - if present - and AC power.

When connecting your equipment:

- Use the correct signal cables for each source.
- Ensure that the cables are securely connected. Tighten the thumbscrews on connectors that have them.

Connecting Source Components to the H9080FD

Connect your video sources to the H9080FD as shown and described in the sections that follow.

HDMI/DVI Connections: See Figure 3-7.

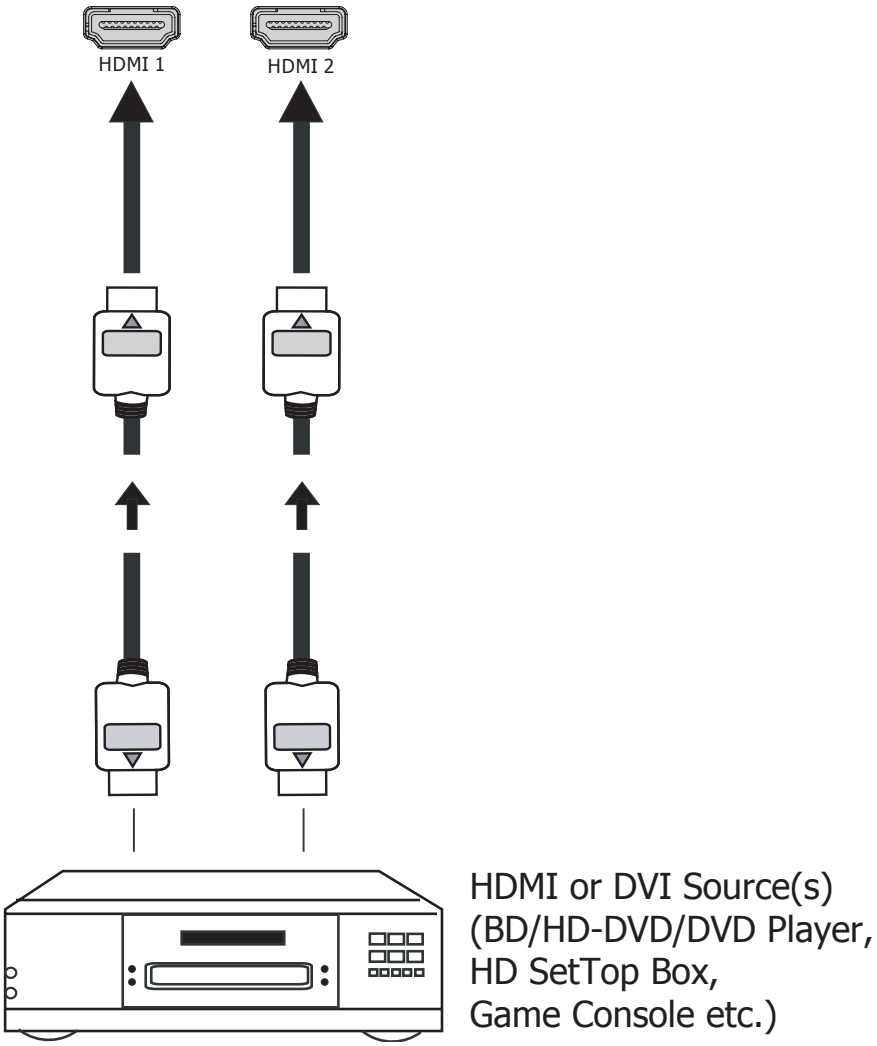

Figure 3-7: HDMI/DVI Source Connections

RGB Connections: Connect your personal computer or other RGB source to the RGB input.

Optionally, if the source outputs RGB with composite sync, connect the green, blue and red outputs to the Y, Pb and Pr terminals on the COMPONENT 1/SCART input and the sync output to the VIDEO input.

See Figure 3-8.

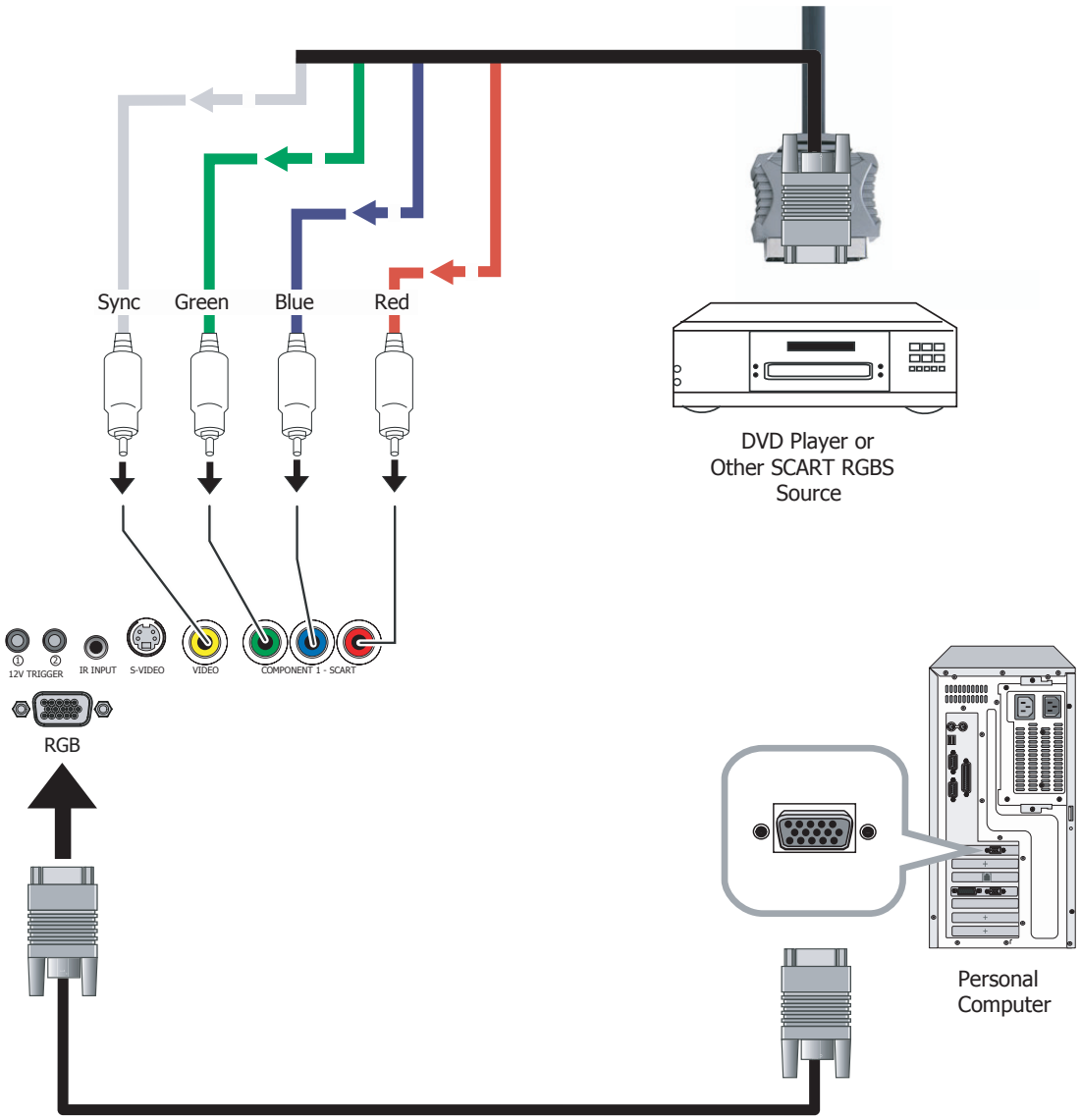

Figure 3-8: RGB Connections

Component Video Connections: Connect your component video sources to the COMPONENT 1/SCART, COMPONENT 2 or RGB inputs as shown in Figure 3-9.

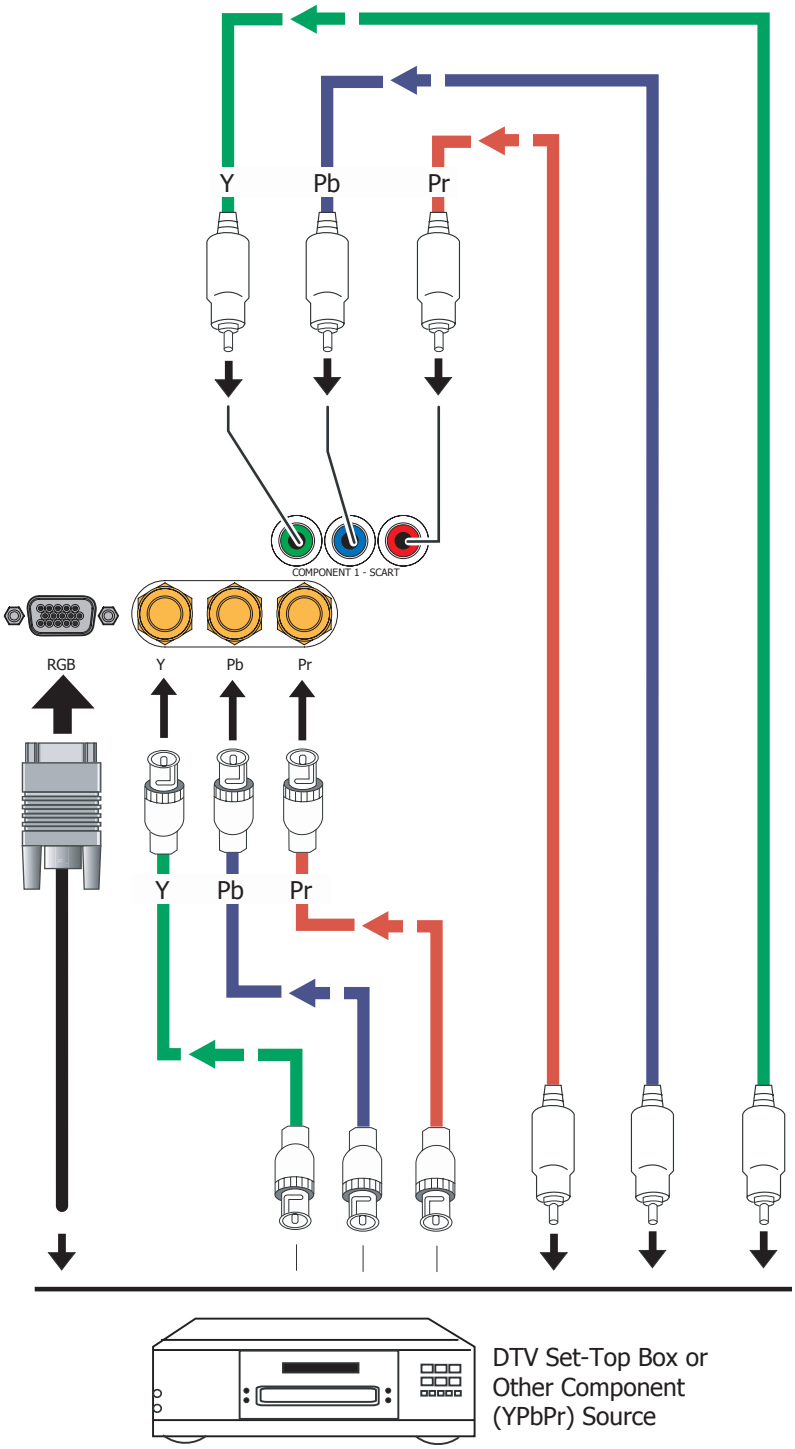

Figure 3-9: Component Video Connections

Composite/S-Video Connections: Connect your Composite and S-Video sources to the H9080FD as shown in Figure 3-10.

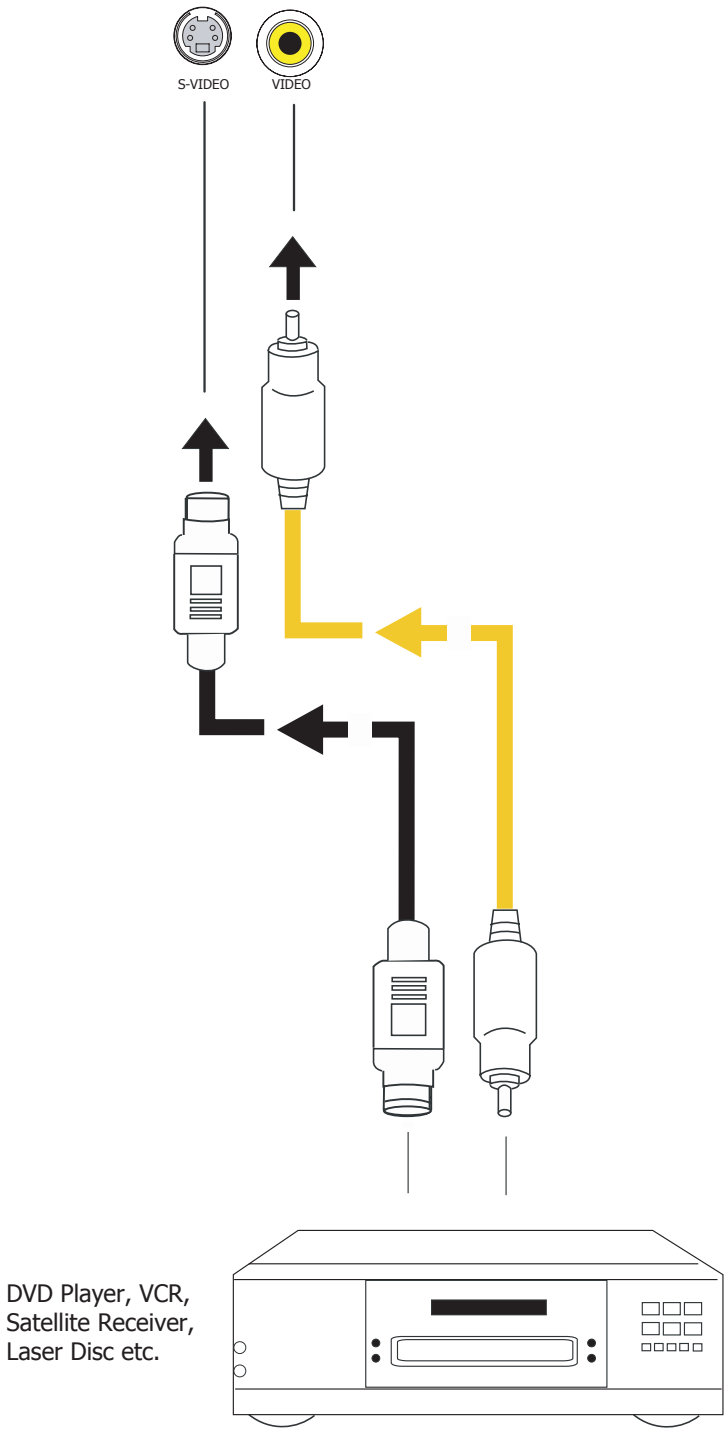

Figure 3-10: Composite and S-Video Connections

RS-232 Controller Connection

Connect a PC or home theater control/automation system (if present) to the RS-232 port on the H9080FD; see Figure 3-11. Use a standard, 9-pin serial cable, wired straight-through.

For more information about using this connection, refer to Serial Interface Specifications on page 58.

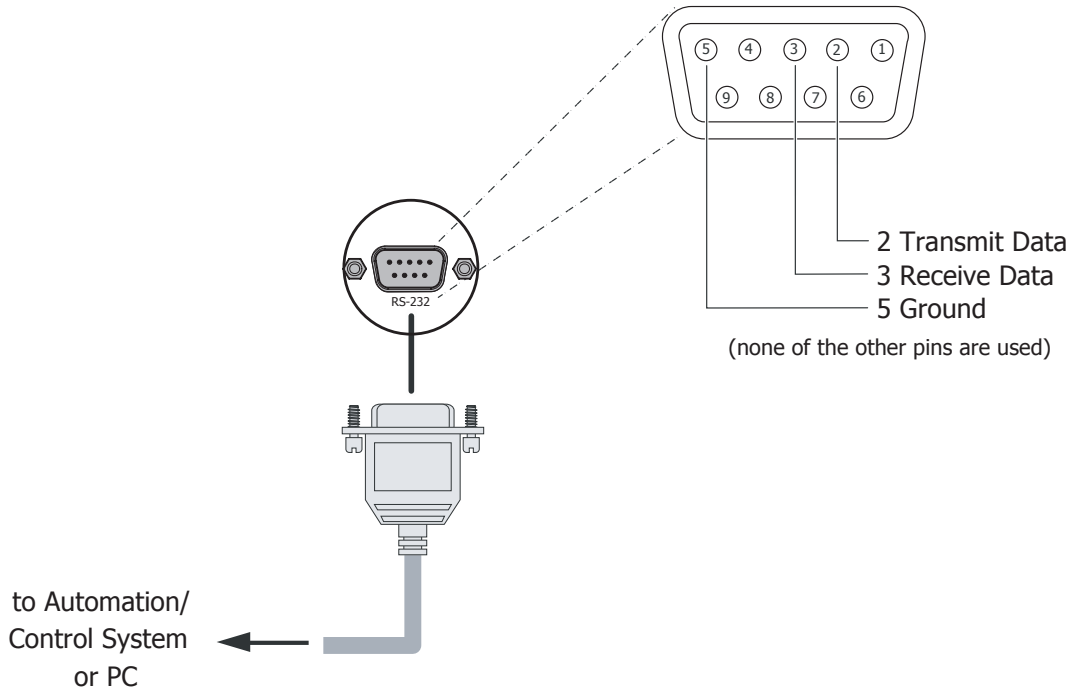

Figure 3-11: RS-232 Control System Connection

Connecting an External IR Receiver

If infrared signals from the remote control cannot reach the projector due to excessive distance or obstructions such as walls or cabinet doors, you can connect an external IR repeater system to the IR INPUT on the H9080FD to extend the range of the remote control. See Figure 3-12.

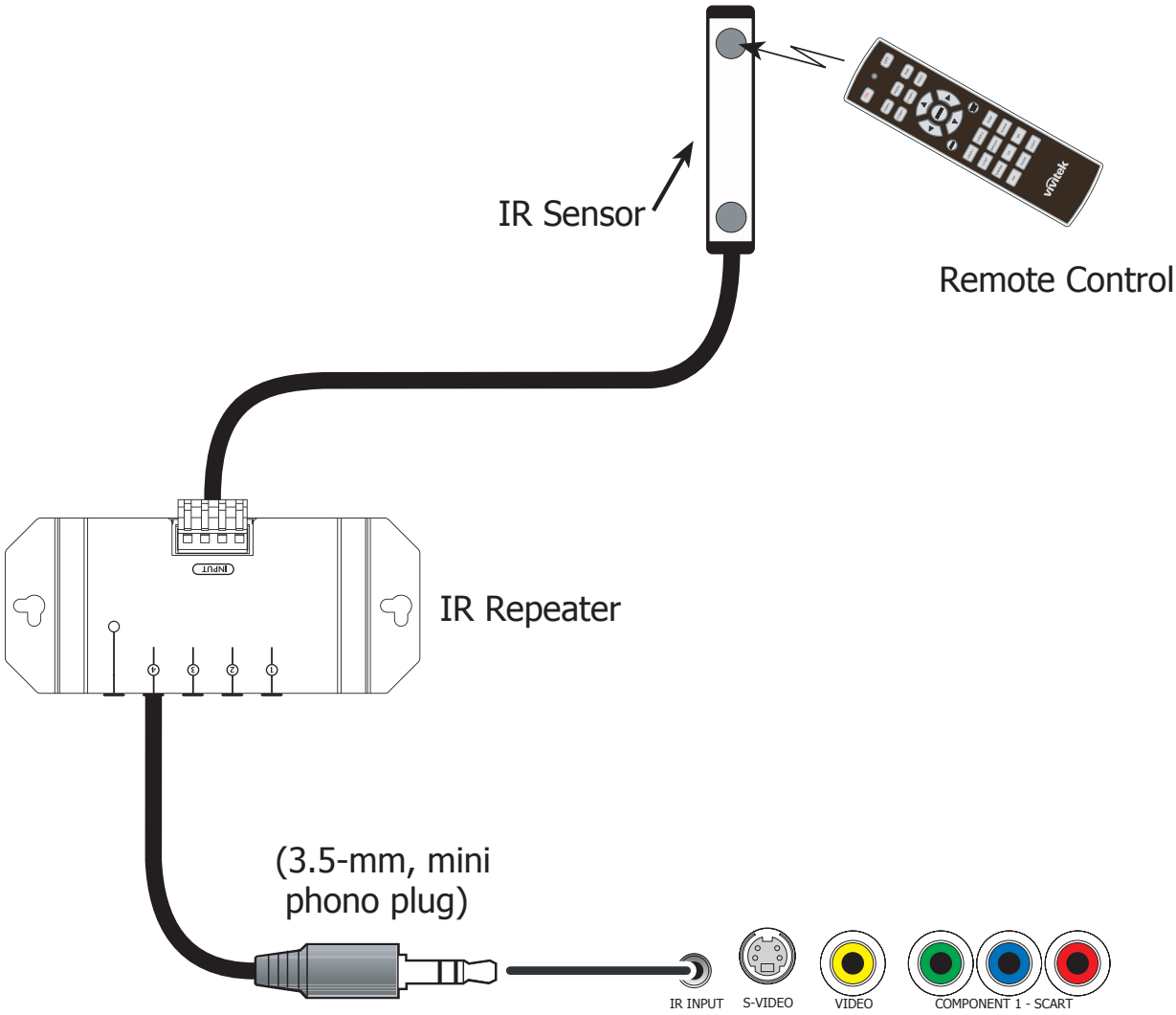

Figure 3-12: External IR Receiver Connection

Connecting to AC Power

The H9080FD ships with various types of AC power cords. Choose the one that is appropriate to your locale.

Plug the female end of the power cord into the AC receptacle on the rear of the projector (AC 100V ~ 240V); see Figure 2-3. Then, connect the other end to your AC power source.

3.5 Turning on the Power

1. Press the ON button on the remote control to turn on the H9080FD.
   The power LED indicator flashes green to indicate that it is warming up.
2. When the projector is ready for use, the LED indicator turns off, and the projector lights.

3.6 Changing the OSD Language

The H9080FD can display the menus in English, Español, Français, Deutsch, Nederlands, Italiano, 繁體中文, and 简体中文. Enter the OSD, select Language in SETUP menu, then press the ◀ or ▶ buttons to select a language. Then, press ENTER to confirm your selection.

3.7 Adjusting the Picture Orientation

If the H9080FD is installed behind the screen, you must change the picture orientation to match the installation method. To do this, press MENU on the remote control. Then, select SETUP from the Main Menu.

Rear Projection

If the projector is used in a rear-projection application, press ▼ repeatedly to select Rear Projection from the SETUP Menu. Press ◀ or ▶ to set it to On.

Ceiling Mode

If the projector is ceiling-mounted, the H9080FD automatically inverts the image. If this automatic inversion is not desired, select Ceiling Mode from the SETUP Menu and set it to Off.

3.8 Lens Adjustments

The H9080FD gives you a great deal of control over the picture size, position and focus.

Focus

To focus the projected image, grasp the lens by the front ring and rotate it.

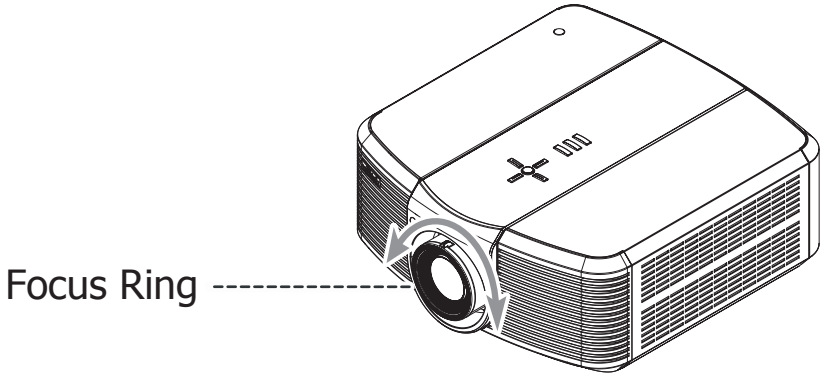

Zoom

To make the picture smaller (zoom out) or larger (zoom in), rotate the zoom ring in the appropriate direction..

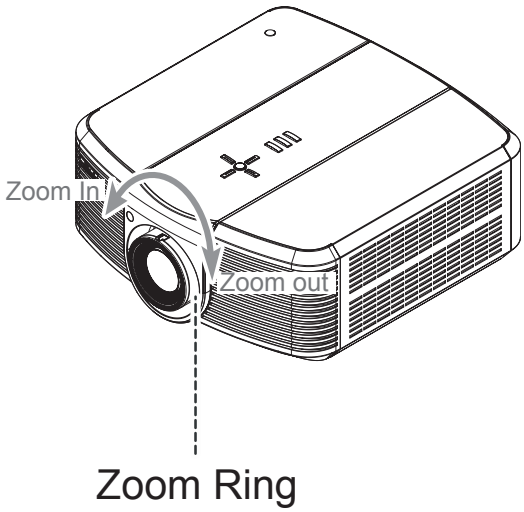

Lens Shift

To access the lens shift controls:

1. Loosen the two screws located at the rear side and underneath of the projector as shown in the figure at the right.
2. Slide the center portion of the top cover backward to expose the holes for lens shift.

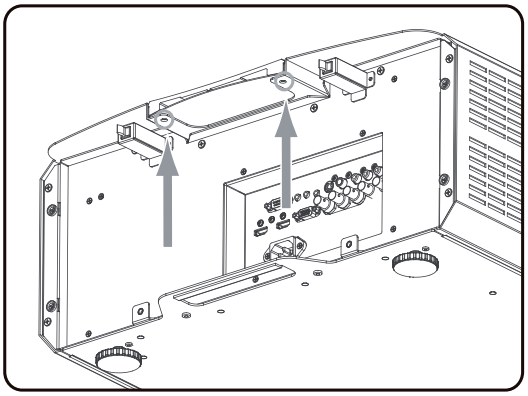

Vertical Lens Shift: To shift the projected image vertically, insert the provided hex wrench into the hole at the top of the projector (directly above the lens). Then, turn the wrench as shown to shift the lens in the desired direction.

Horizontal Lens Shift: To shift the projected image horizontally, insert the provided hex wrench into the hole at the top of the projector. Then, turn the wrench as shown to shift the lens in the desired direction.

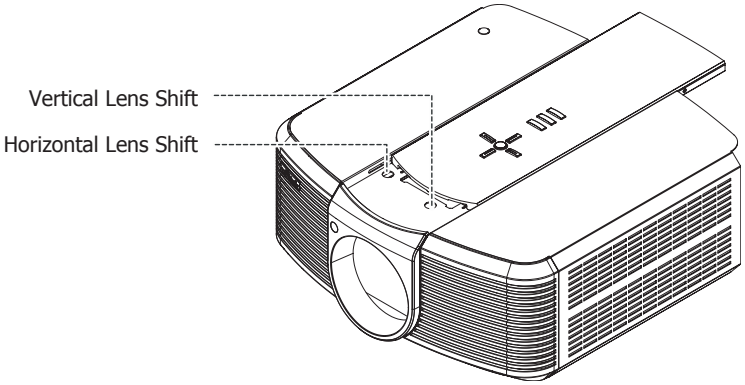

4 OPERATION

4.1 Selecting an Aspect Ratio

Press the aspect ratio (ASPECT RATIO) button to select the appropriate aspect ratio for the type of program material being viewed.

4.2 Selecting An Input Source

When you turn on the H9080FD, it switches to the last selected input and looks for a valid signal.

Use these buttons on the remote control to select an input source directly.

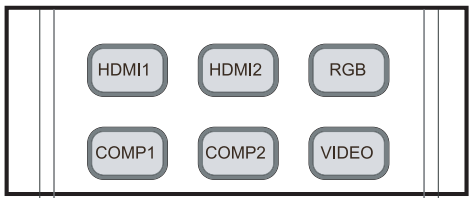

4.3 Using the On-Screen Menus

1. Press the MENU button on the remote control or system keypad to display the Main Menu.
2. There are five menus. Press ◀ or ▶ to select a sub-menu.
3. Press ▲ or ▼ to select a sub-menu item.
4. For each sub-menu item, the currently-selected value is highlighted.
   Press ◀ or ▶ to choose a setting for that item, or press ENTER to go to another sub-menu.
5. Press MENU to return to the previous menu.
6. From the Main Menu, press MENU to turn off the OSD menu.

The H9080FD OSD menus are arranged hierarchically, as shown in Figure 4-1.

Note Depending on the selected input source and signal characteristics, some menu options may not be available.

GENEAL	Source Select	HDMI 1, HDMI 2, RGB, Comp 1, Comp 2, Video, S-Video, SCART	
	Menu Position	Top Left, Top Right, Bottom Left, Bottom Right, Center	
	PIP Select	Off, HDMI 1, HDMI 2, RGB, Comp 1, Comp 2, Video, S-Video, SCART	
	PIP Position	Top Left, Top Right, Bottom Left, Bottom Right, PBP, Split	
	Memory	Recall Memory	User1, User2, Default
		Save Settings	User1, User2
	Blank Screen	Logo, Black, Blue, White	
	Logo Display	On, Off	
	Auto Source	On, Off	
	Test Patern	On, Off	
	Blue Only	On, Off	
IMAGE	Aspect Ratio	16:9, Letterbox, 4:3, 4:3 Narrow, Native	
	Brightness	0-200	
	Contrast	0-200	
	Color Sauration	0-200	
	Color Tint	0-200	
	Sharpness	Sharpness	0-200
		Sharpness Mode	Simple, Advanced
		Horizontal Sharpness	0-200
		Vertical Sharpness	0-200
		Diagonal Sharpness	0-200
		Sharpness Overshoot	0-200
		Horizontal Texture	0-200
		Verical Texture	0-200
		Diagonal Texture	0-200
		Texture Overshoot	0-200
		Noise Threshold	0-200
	Noise Reduction	Noise Reduction	0-200
		Noise Reduction Mode	Simple, Advanced
		General Noise Reduction	0-200
		Block Artifact Reduction	0-200
		Mosquito Noise Reduction	0-200
	Overscan	Off, Crop, Zoom	
	HSG	HSG Select	Hue, Saturation, Gain
		Red	0-200
		Green	0-200
		Blue	0-200
		Cyan	0-200
		Magenta	0-200
		Yellow	0-200
	Resync		

ADVANCED	Color Space	Auto, REC709, REC601, RGB-PC, RGB-VIDEO	
	Video Format	Auto, NTSC, PAL, SECAM	
	Gamma	CRT, Film, Cinema, Bright, Graphics	
	Color Temperature	Warm, Standard, Cool, Cooler	
	DLP Frame Rate	Auto, 48Hz, 50Hz, 60Hz	
	Color Gamut	Auto, REC709, SMPTE-C, EBU, Native, DCI	
	BrilliantColr	Off, On	
	Dynamic Iris	Off, On, Ultra-DI, Infinity	
	Adaptive Contrast	Off, On	
	RGB Adjust	Red Offset	0-200
		Green Offset	0-200
		Blue Offset	0-200
		Red Gain	0-200
		Green Gain	0-200
		Blue Gain	0-200
	Fine Sync	V Position	0-200
		H Position	0-200
		Phase	0-200
		Tracking	0-200
		Sync Level	0-200
SETUP	Language	English, Español, Français, Deutsch, Nederlands, Italiano, 繁體中文, 简体中文	
	Source Enable	HDMI 1	On, Off
		HDMI 2	On, Off
		RGB	On, Off
		Comp 1	On, Off
		Comp 2	On, Off
		Video	On, Off
		S-Video	On, Off
		SCART	On, Off
	Auto Power Off	Off, On	
	Auto Power On	Off, On	
	Rear Projection	Off, On	
	Ceiling Mode	Auto, Off, On	
	Trigger 1	LED, 16:9, Letterbox, 4:3, 4:3 Narrow, RS232	
	Trigger 2	LED, 16:9, Letterbox, 4:3, 4:3 Narrow, RS232	
	Factory Reset		
INFO	Model		
	Serial Number		
	Software Version		
	Active/PIP Source		
	Pixel Clock		
	Signal Format		
	H/V Refresh Rate		
	LED Hours		
	LED Hour Reset		

Figure 4-1: H9080FD OSD Menu Structure

GENERAL

The H9080FD GENERAL Menu, shown in Figure 4-2, provides access to the most commonly-used projector functions.

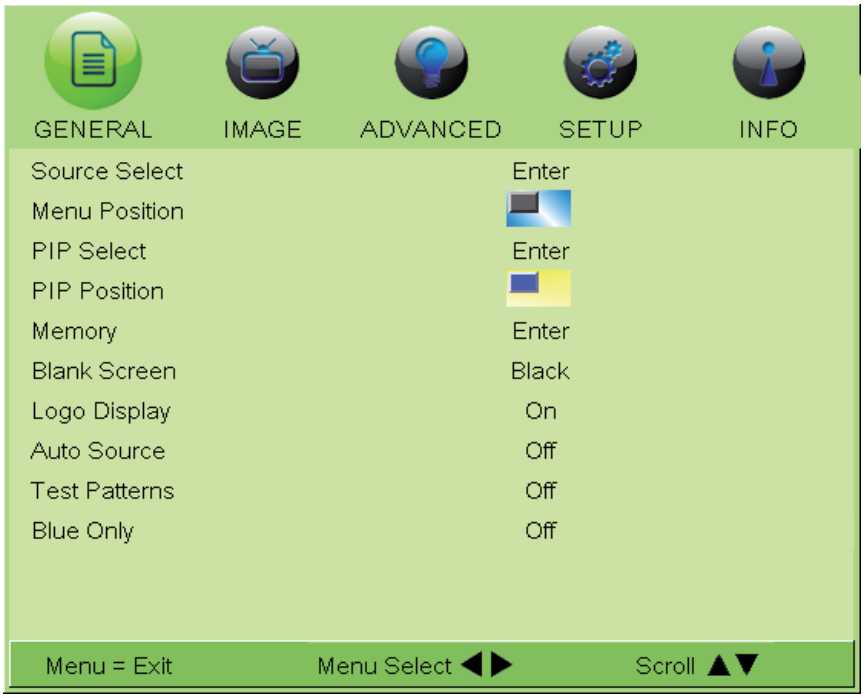

Figure 4-2: H9080FD GENERAL Menu

- **Source Select:** To select a video source, press ▲ or ▼ to highlight Source Select, then press ENTER. This displays the Source Select submenu, shown in Figure 4-3.

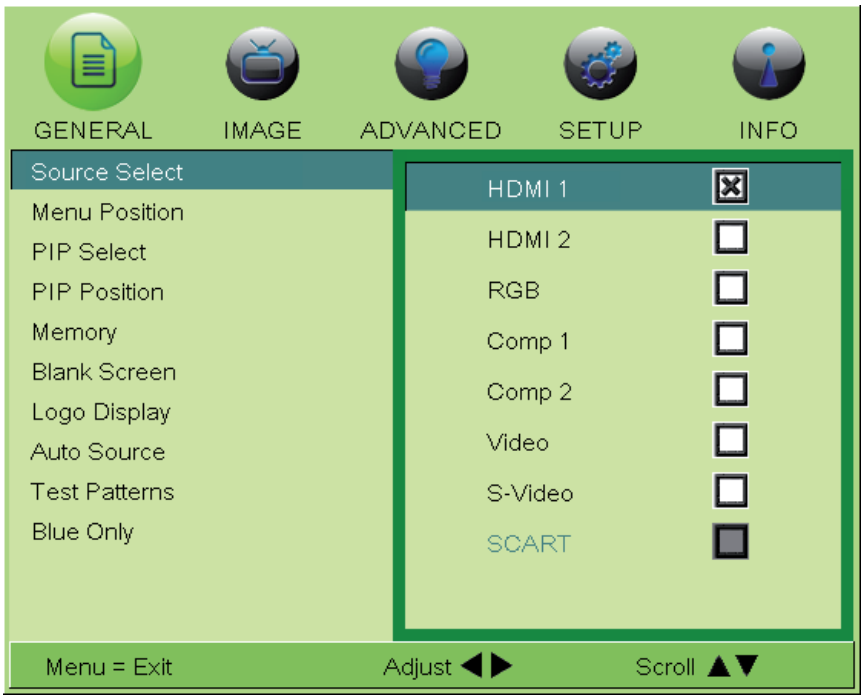

Figure 4-3: Source Select Sub-Menu

- **Menu Position:** Select Menu Position from the GENERAL menu to change the OSD menu position.

  The default setting is "" (top left).
- **PIP Select:** To select a Picture in Picture source, press ▲ or ▼ to highlight PIP Select, then press ENTER. This displays the PIP Select sub-menu.
  The default source selection is Off. All sources that are not available (refer to Source Enable on page 49) are grayed out.

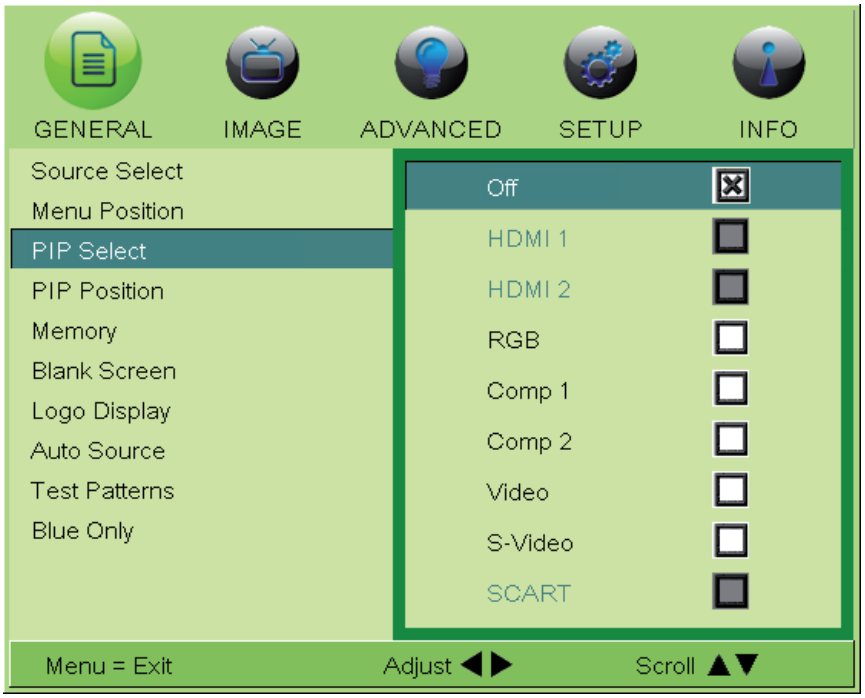

Figure 4-4: PIP Select Sub-Menu

- **PIP Position:** Press ◀ or ▶ to select the on-screen PIP position. Choose one of the following:

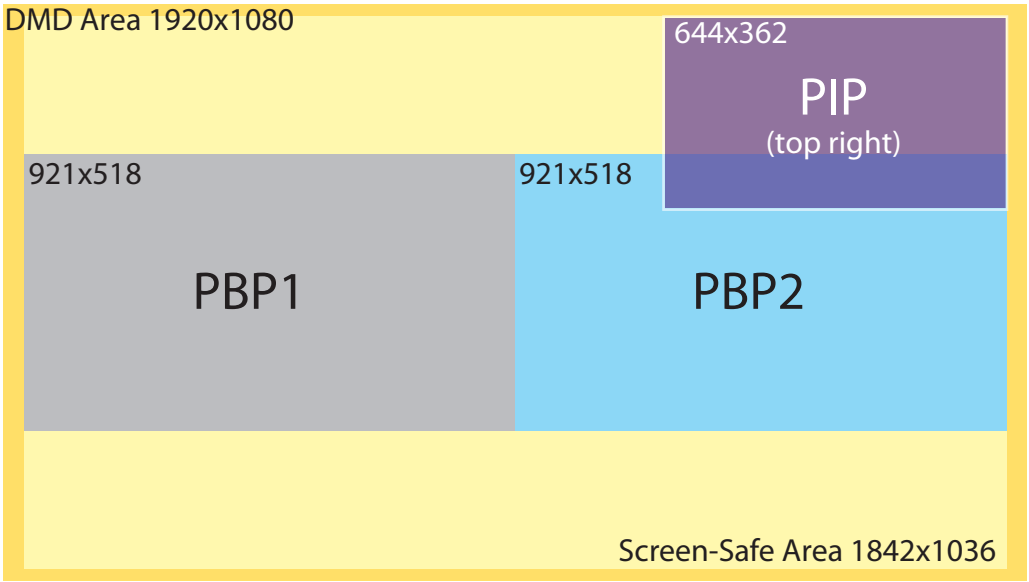

Figure 4-5: PIP and PBP areas for 1080p Display

- Top Left: This places the PIP source into a 644x362 designated image area at the top left of the screen.
- Top Right: This places the PIP source into a 644x362 designated image area at the top right of the screen.
- Bottom Left: This places the PIP source into a 644x362 designated image area at the bottom left of the screen-safe area of the DMD.
- Bottom Right: This places the PIP source into a 644x362 designated image area at the bottom right of the screen-safe area of the DMD.
- PBP (Picture-By-Picture): This reduces the designated image area of the Active source to 921x518 and places it next to the PIP source, which is also in a 921x518 image area. These two images are centered on the screen.
- Split: This is the mode in which the active source is also used as the PIP source and placed in a PIP area equal to half the display on the left side. This results in the right half of the image being the active source and the left half is the PIP source.

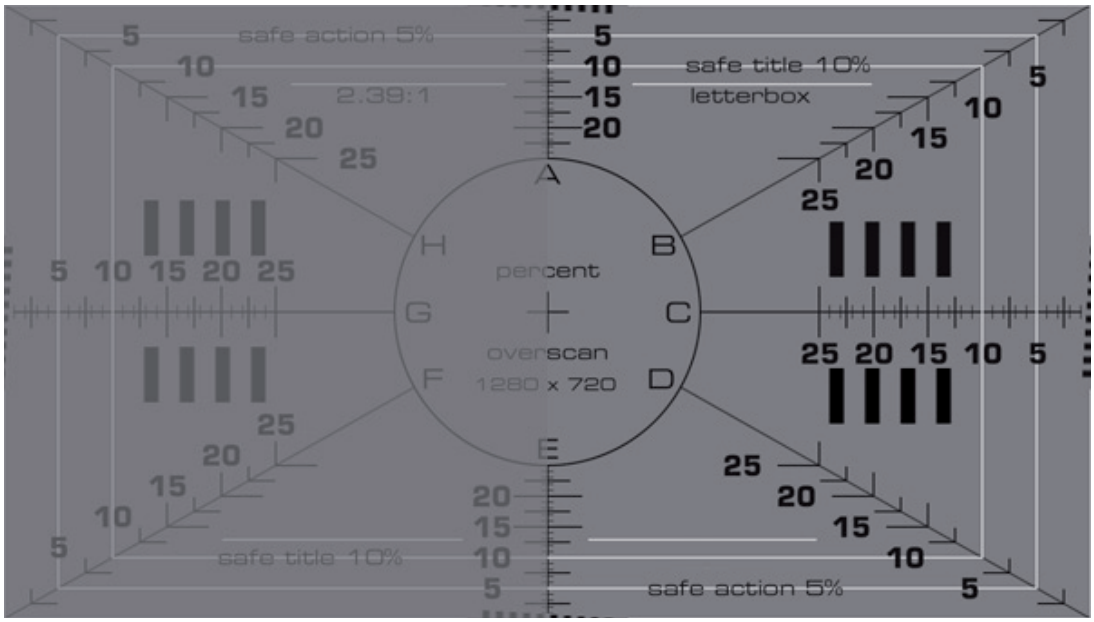

Figure 4-6: PIP Split Mode

- **Memory:** Select to save user defined settings.
  The following items are saved (for all sources, not just the active source):
  - Brightness / Contrast
  - Sharpness (all settings in sub-menu)
  - HSG (all settings in sub-menu)
  - Color Temperature
  - Color Gamut
  - Dynamic Iris
  - RGB Adjust (all settings in sub-menu)
  - Color Saturation / Color Tint
  - Noise Reduction (all settings in sub-menu)
  - Color Space
  - DLP Frame Rate
  - BrilliantColor
  - Adaptive Contrast

- **Recall Memory**: Select Memory from the General menu, and then press Enter to activate Recall Memory. Use the ◀ or ▶ buttons to select the modes: User-1, User-2 or Default.
- **Save Settings**: Select Memory from the General menu, and then press ▼ to highlight Save Settings. Use the ◀ or ▶ buttons to select the modes: User-1 or User-2.

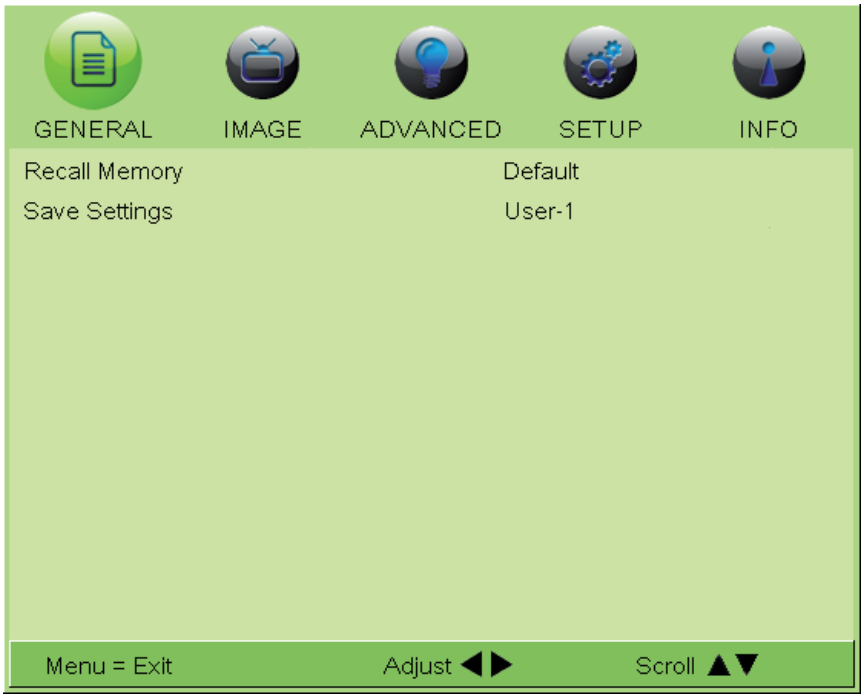

Figure 4-7: Memory Sub-Menu

- **Blank Screen:** Select Blank Screen from the GENERAL menu to choose the color of the blank screen that appears when no source signal is present. The options are Logo, Black, Blue and White. The default is Black.
- **Logo Display:** Select to enable or disable the splash screen.
- **Auto Source:** This function scans for active sources when the current source is not available (default setting is Off).
- **Test Patterns:** The H9080FD has numerous internal test patterns that are useful to technicians for advanced calibration, measurement and fault isolation purposes. To access them, select Test Patterns from the GENERAL menu and set it to On. The available test patterns are:
  - White
  - Black
  - Red
  - Green
  - Blue
  - Cyan
  - Magenta
  - Yellow
  - ANSI Checkerboard
  - Horizontal Gray Ramp
  - Focus Grid

  Press ◀ or ▶ on the remote control unit or built-in keypad to cycle through the test patterns.

  Note The OSD menus are not available when in "test pattern" mode.

  To turn test patterns off, press any key other than ◀ or ▶ on the remote control unit or built-in keypad.
- **Blue Only:** This feature removes all red and green color information from the image, and is useful for color-calibrating the projector or other video components.

IMAGE

The H9080FD IMAGE Menu, shown in Figure 4-8, to perform image adjustments.

Figure 4-8: H9080FD IMAGE Menu

The PIP function must be disabled before you change the aspect ratio.

- **Aspect Ratio:** To change the aspect ratio (size and shape) of the projected image, press ▲ or ▼ to highlight Aspect Ratio. Use the ◀ or ▶ buttons to select the appropriate aspect ratio for your screen size, installed lens configuration and the type of program material being viewed, then press ENTER; refer to Table 4-1.

Aspect Ratio Setting	Description	Aspect Ratio of Source Signal	Geometry of Projected Image	
			With Standard Lens (1.78:1 Screen)	With Anamorphic Lens (2.35:1 Screen)
16:9	16:9 linearly scales the source active image horizontally and vertically to fill a 16:9 screen.	16:9	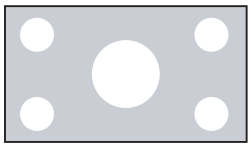	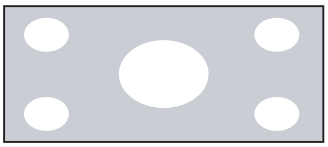
		4:3	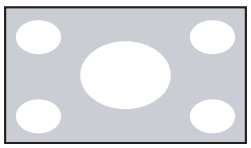	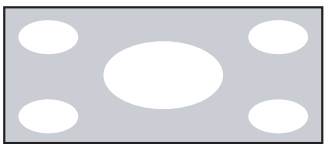
4:3	4:3 linearly scales the source active image horizontally and vertically to fill a 4:3 screen.	16:9	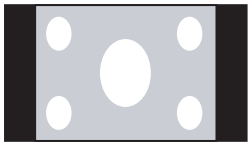	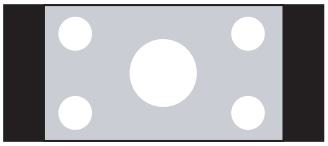
		4:3	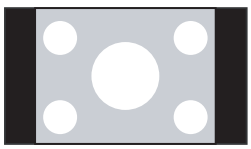	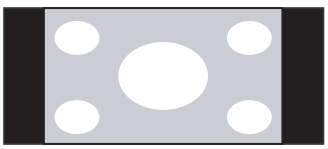

Aspect Ratio Setting	Description	Aspect Ratio of Source Signal	Geometry of Projected Image	
			With Standard Lens (1.78:1 Screen)	With Anamorphic Lens (2.35:1 Screen)
Letterbox	Letterbox mode scales (zooms in on) a 4:3 image linearly (by the same amount on all sides) to fill a 16:9 display, cropping the top and bottom of the image.	16:9	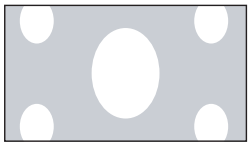	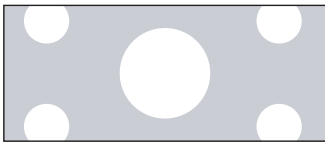
		4:3	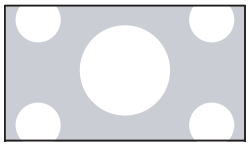	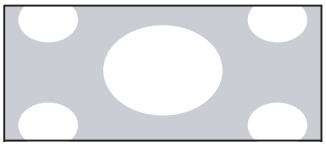
4:3 Narrow	4:3 Narrow linearly scales the source active image horizontally, so that a 4:3 source has the correct aspect ratio when using an anamorphic lens.	16:9	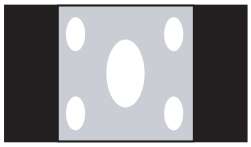	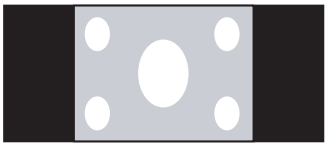
		4:3	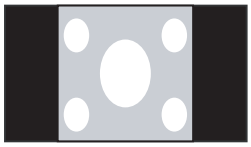	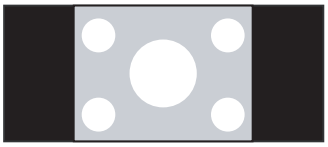
Native	Select Native to display the source signal in its native resolution, centered in the display area with no re-sizing or overscan. This means, for example, that 720p HDTV programs will display with unused pixels on all sides: 320 on the left and right sides and 180 above and below. With SDTV and EDTV sources, the H9080FD scales the image horizontally to achieve a 16:9 aspect ratio.	16:9	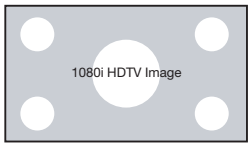 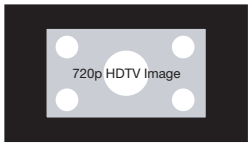	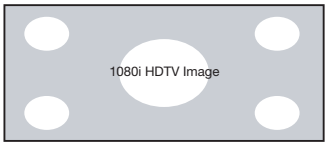 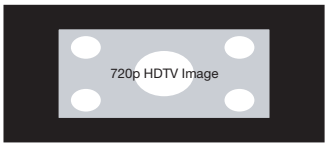
		4:3	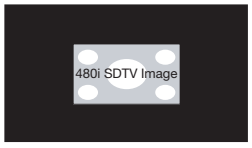 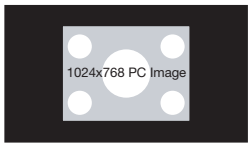	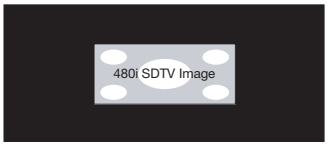 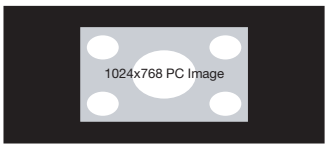

Table 4-1: Aspect Ratio Settings

On your external test pattern source, select a PLUGE pattern. (PLUGE is an acronym for “Picture Line-Up Generation Equipment.”) Figure 4-9 shows a typical PLUGE pattern.

PLUGE patterns vary but generally consist of some combination of black, white and gray areas against a black background. The example above includes two vertical bars and four shaded boxes.

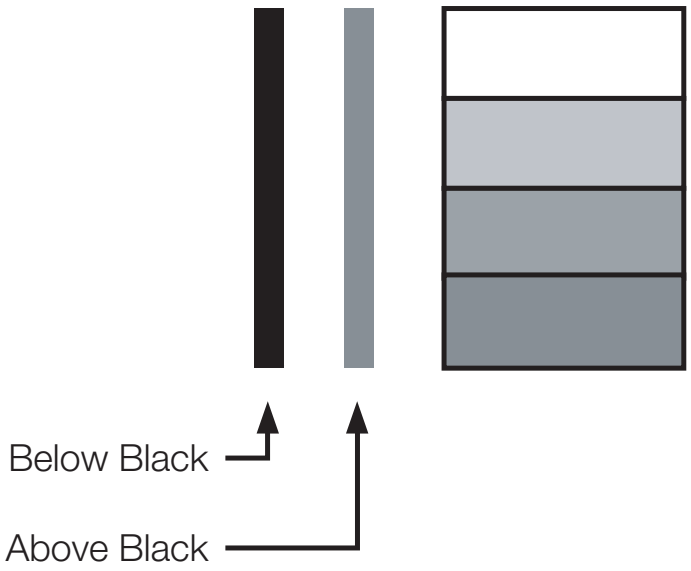

Figure 4-9: Typical PLUGE Pattern for Adjusting Brightness

- **Brightness:** Select Brightness from the Image menu. Use the ◀ or ▶ buttons to adjust the level so that:
  The darkest black bars disappear into the background.

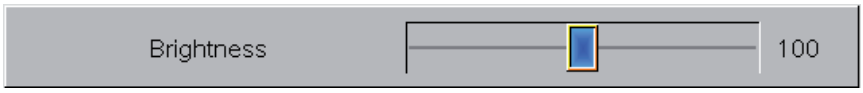

Note For best results, Vivitek recommends that you set Dynamic Iris to Off before adjusting Brightness, Contrast and other image quality settings in IMAGE menu (refer to Dynamic Iris on page 50). After you have completed the initial calibration, set Dynamic Iris to On if desired.

- The dark gray areas are barely visible.
- The lighter gray areas are clearly visible.
- The white areas are a comfortable level of true white.
- The image contains only black, gray and white (no color).

- **Contrast:** On your external test pattern source, select a stepped, gray-bar pattern like the one shown in Figure 4-10.

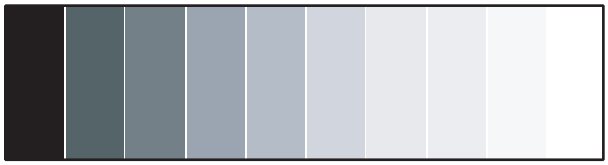

Figure 4-10: Typical Gray Bar Pattern for Adjusting Contrast

Select Contrast from the IMAGE menu. Use the ◀ or ▶ buttons to adjust the contrast up until the top two bars become almost the same brightness, then down just until the brightness change between these bars is consistent with the other bars.

Note Brightness and Contrast controls are interactive. A change to one may require a subtle change to the other in order to achieve the optimum setting.

- **Color Saturation**: To adjust the overall color intensity, select Color Saturation from the IMAGE menu. Decrease this setting if colors are overly saturated; increase it if colors appear muted or washed out.
- **Color Tint:** Tint or "hue" is the ratio of red to green in the color portion of the image. To adjust the tint, select Color Tint from the IMAGE menu. Decrease this setting to shift the hue toward red; increase it to shift the hue toward green.

Note Like the Brightness and Contrast controls, the color and tint controls are interactive. A change to one may require a subtle change to the other in order to achieve the optimum setting.

- **Sharpness:** Sharpness is the amount of high-frequency detail in the image.

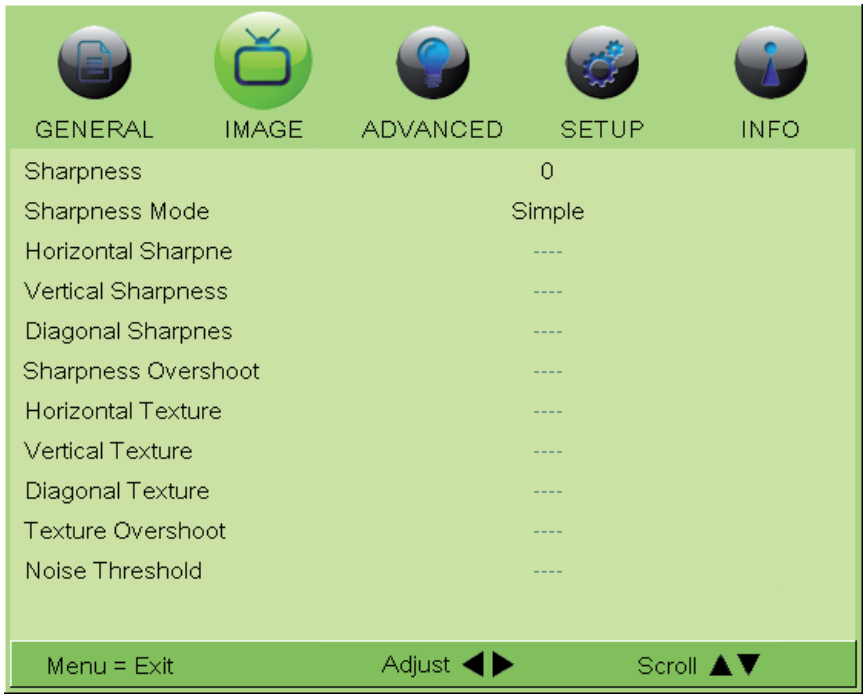

Figure 4-11: Sharpness Sub-Menu

To adjust this, select Sharpness from the IMAGE menu and press ENTER. On your external test pattern source, select a pattern like the one shown in Figure 4-12.

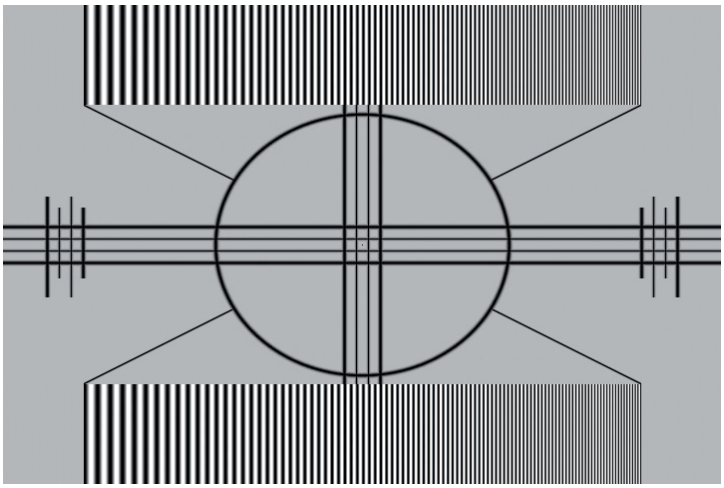

Figure 4-12: Typical Test Pattern for Adjusting Sharpness

- Sharpness (Simple Mode): Adjust as needed, looking for white edges around the transitions from black to gray and differently-sized lines in the “sweep” patterns at the top and bottom. Lower the sharpness setting to eliminate them.
- Sharpness Mode: Sharpness Mode allows or prevents access to the detailed sharpness controls in this menu. In most cases, Simple mode provides a sufficient level of control to produce the best picture from the most popular sources. In Simple mode, only the Sharpness (top-most) slider is adjustable; the others are grayed out.
- Horizontal Sharpness / Vertical Sharpness / Diagonal Sharpness: Use these controls to enhance image detail along horizontal, vertical and diagonal edges respectively.
- Sharpness Overshoot: Use the Sharpness Overshoot control to minimize or eliminate rings or shadows on dominant edges that cannot be removed using the “simple” Sharpness control.
- Horizontal Texture / Vertical Texture / Diagonal Texture / Texture Overshoot: Use these controls to remove artifacts from textured areas that cannot be removed using the “simple” Sharpness control.
- Noise Threshold: The Noise Threshold setting adjusts the frequency below which the Sharpness controls have an effect. Frequencies above the threshold are considered “noise.”

  Generally, the higher the setting, the more noticeable the effect of any adjustments will be.

- **Noise Reduction:** To apply noise reduction to the source signal, select Noise Reduction from the IMAGE menu and press ENTER.

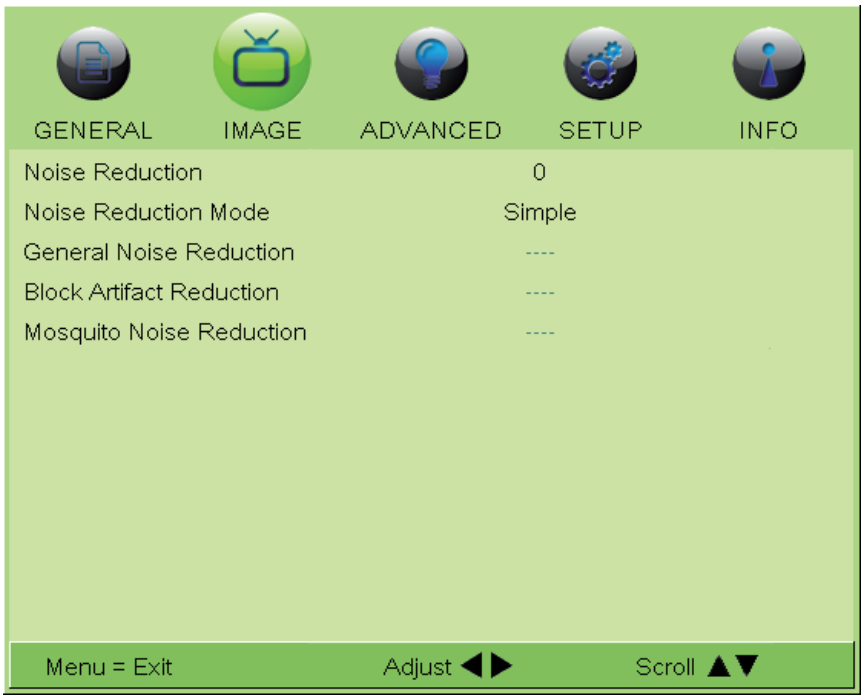

Figure 4-13: Noise Reduction Sub-Menu

Noise Reduction is useful for clearing up noisy images from interlaced SD sources.

- Noise Reduction (Simple Mode): Use the ◀ or ▶ buttons to adjust as desired, keeping in mind that reducing noise (which reduces high frequencies) may also soften the image.
- Noise Reduction Mode: Noise Reduction Mode allows or prevents access to the detailed noise reduction controls in this menu.
  In most cases, Simple mode provides a sufficient level of control to produce the best picture from the most popular sources. In Simple mode, only the Noise Reduction (top-most) slider is adjustable; the others are grayed out. Choose Advanced mode if you need more precise control over noise reduction. In Advanced mode, only the top slider is grayed out.
- General Noise Reduction: General Noise Reduction is temporal and spatial noise reduction for all types of inputs. The scene is analyzed for differences from frame to frame and reduces those differences that are not determined to be motion.
- Block Artifact Reduction: Use this control to reduce or eliminate so-called “block artifacts” in MPEG-compressed video signals (digital broadcasts or DVDs). Set it as needed to minimize distortion within horizontal and vertical block boundaries.
- Mosquito Noise Reduction: Use this control to reduce or eliminate so-called “mosquito noise” in MPEG-compressed video signals. Set it as needed to minimize distortion around the edges of moving objects, moving artifacts around edges and/or blotchy noise patterns superimposed over the objects.

- **Overscan:** Some television programs are produced based on the assumption that older television sets may not display the outer edges of the broadcast picture area. Overscan effectively hides these inactive, outer edges of the image. Choose one of the following:
  - Off: This setting leaves the image as-is.
  - Crop: This setting adds a mask at the left and right edges of the source active image equal to 3% of the displayed horizontal resolution, and at the top and bottom edges equal to 3% of the displayed vertical resolution.
  - Zoom: This setting adds a factor to the scaling of the source active image so that the vertical and horizontal resolutions are 106% of the size determined by the aspect ratio function. Anything outside of the original image area is removed.

Note When the Aspect Ratio is set to Native, set Overscan to Off or Crop.

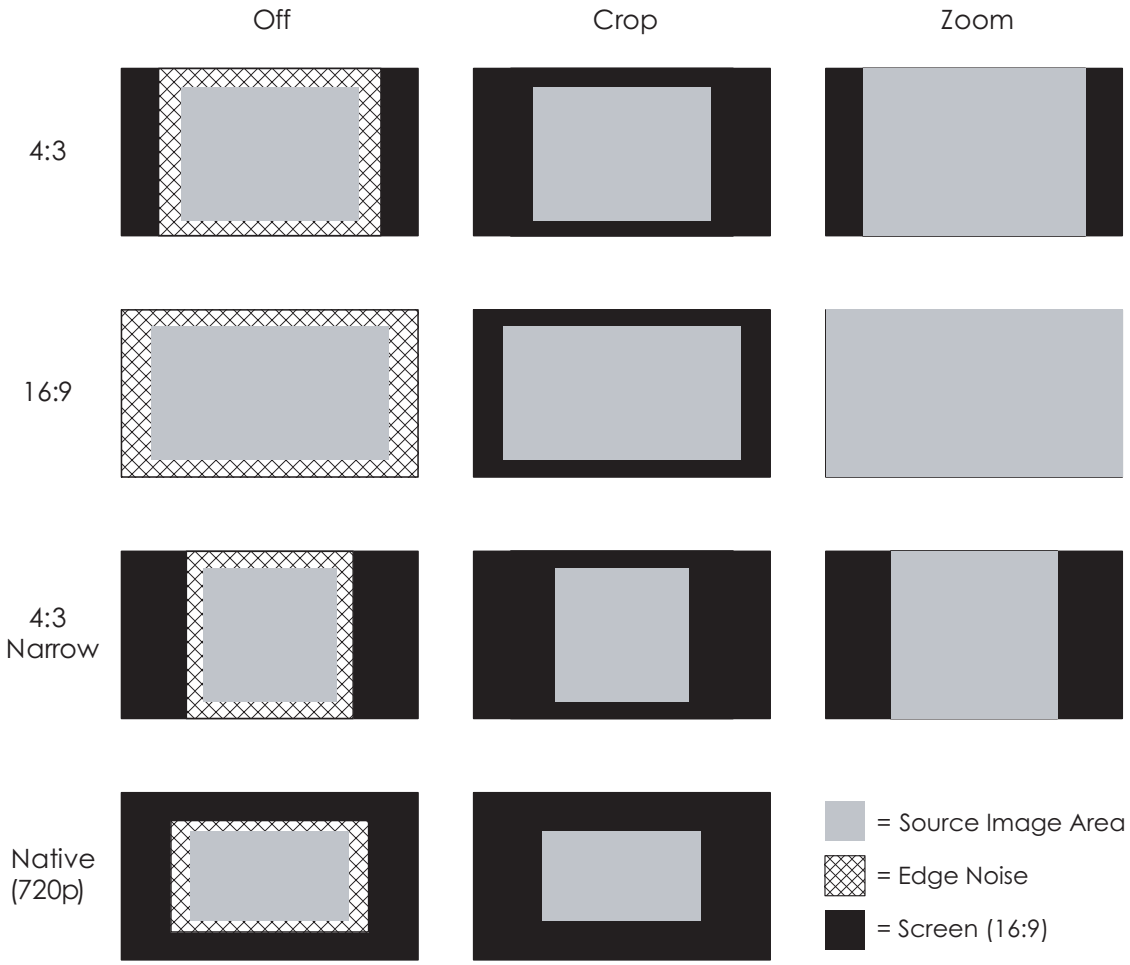

Figure 4-14: Overscan Examples

- **HSG:** Use these controls to adjust the Hue, Saturation and Gain (red, green, blue, cyan, magenta, yellow) color settings.

Figure 4-15: HSG Sub-Menu

- **Resync:** If experiencing a distorted or scrambled input source image, activate Resync, which affects FineSync settings (see page 52) in the default mode to re-obtain the active and PIP sources.

ADVANCED

Use the controls in the ADVANCED menu, shown in Figure 4-16, to perform advanced image adjustments.

Figure 4-16: H9080FD ADVANCED Menu

- **Color Space:** Select Color Space from the ADVANCED menu to choose the color space of the source signal for HDMI, RGB, and component connections.
  The default setting, Auto, functions as follows:
  - HDMI: If the Auxiliary Video Information (AVI) infoframe contains color space and/or range data, the H9080FD uses that information. Otherwise, for RGB sources, the H9080FD uses the RGB-Video color space. For component SDTV and EDTV resolutions, REC601 is used. For other component video resolutions, REC709 is used.
  - RGB: If Hsync or Vsync signals are present, the H9080FD uses the RGB-PC color space. Otherwise, REC601 is used for SDTV and EDTV sources, and REC709 for all other sources.
  - Component: For SDTV and EDTV resolutions, the H9080FD uses the REC601 color space. For all other resolutions REC709 is used.

  In most cases, the Auto setting determines the correct color space to use. If it does not, you can force the H9080FD to use a specific color space. Choose one of the following:
  - REC709 sets the color space matrix to that defined in ITU-R BT.709.
  - REC601 sets the color space matrix to that defined in ITU-R BT.601.
  - RGB-PC uses RGB color space and sets black at 0,0,0 RGB and white at 255,255,255 RGB, assuming an 8-bit image.
  - RGB-Video uses RGB color space and sets black at 16,16,16 RGB and white at 235,235,235, assuming an 8-bit image, to correspond to the luminance values defined in digital component standards.

- **Video Standard:** Select Video Standard from the ADVANCED menu to specify the color system for composite video or S-Video input signals.
  Different countries use different formats for video signals. Select the appropriate Video Standard for your region:
  - Auto: The color systems are automatically identified and the format is set accordingly.
  - NTSC: This is the standard format used mainly in the United States and Japan.
  - PAL: This is the standard used in Europe, Australia and many other parts of the world, typically with a 50Hz frame rate.
  - SECAM: This is a standard format used mainly in France and Russia.
- **Gamma:** Select Gamma from the ADVANCED menu to choose a DLP de-gamma curve. Used correctly, the Gamma control can improve contrast while maintaining good details for blacks and whites.
  If excess ambient light washes out the image and it becomes difficult or impossible to see details in dark areas, lower the gamma setting to compensate. This improves contrast while maintaining good details for blacks. Conversely, if the image is washed out and unnatural, with excessive detail in black areas, increase the setting.
  - CRT sets the gamma to 2.5.
  - Film sets the gamma to 2.2.
  - Cinema is similar to Film gamma but differs in dark areas of the image to correspond to the function that video cameras use to create images.
  - Bright sets the gamma to 2.0.
  - Graphics should only be used for computer presentations that require increased brightness at the cost of gray-scale accuracy.
- **Color Temperature:** Select to set the projector's color temperature. Range: Warm, Standard (default), Cool, Cooler.
- **DLP Frame Rate:** Select DLP Frame Rate from the ADVANCED menu to choose the output frame rate. You can have the H9080FD automatically determine the optimum frame rate, or you can force it to use a specific frame rate. The default setting, Auto, frame locks to the main source if it has a vertical refresh rate of between 48 and 62Hz. Vertical refresh rates of from 24 to 31Hz are doubled. Frame rates between 31 and 48Hz and greater than 62Hz are converted to 60Hz.
  - Select 48Hz to force the output frame rate to 48Hz. Use this setting to eliminate 2:3 pull-down judder with 60Hz film-based sources.
  - 50Hz and 60Hz force the output frame rate to 50Hz and 60Hz respectively.
- **Color Gamut:** Press the ◀ or ▶ buttons to select the Golor Gamut values. The default setting is Auto.
- **BrilliantColor:** Press the ◀ or ▶ buttons to enable or disable BrilliantColor.
- **Dynamic Iris:** Press the ◀ or ▶ buttons to enable or disable Dynamic Iris.
- **Adaptive Contrast:** Adaptive Contrast enhancement expands the light and dark portions of an output image according to the mean luminance of the input image.

- **RGB Adjust:** To remove any trace of color from the white areas of the projected image, choose RGB Adjust from the ADVANCED menu and press ENTER. This displays the RGB Adjust sub-menu, shown in Figure 4-17.

Figure 4-17: RGB Adjust Sub-Menu

- Offset: Use the Offset controls in the RGB Adjust sub-menu to correct color imbalances in the dark areas of the image. A good way to do this is to use a test pattern consisting mostly of dark gray areas, such as a 30 IRE "window" pattern. If the gray areas contain traces of red, green or blue, decrease the Offset for that color.
- Gain: Use the Gain controls to correct color imbalances in the bright areas of the image. A good way to do this is to use a test pattern consisting mostly of solid white areas, such as an 80 IRE "window" pattern. If the white areas contain traces of red, green or blue, decrease the Gain for that color.

  The Gain controls increase or decrease the full-scale input range; the Offset controls shift the entire range, resulting in a change in brightness.

Note Generally, higher Gain settings reduce the image contrast; higher Offset settings reduce the image brightness.

- **Fine Sync:** To fine-tune the position and other image attributes, choose Fine Sync from the ADVANCED menu and press ENTER. This displays the Fine Sync sub-menu, shown in Figure 4-18.

Figure 4-18: Fine Sync Sub-Menu

- V Position: This control adjusts the vertical position of the image within the designated image area, up to 25 percent of the image height up or down.
- H Position: This control adjusts the horizontal position of the image within the designated image area, up to 25 percent of the image width left or right.
- Phase (RGB or Component sources): This control adjusts the phase of the pixel sampling clock relative to the incoming signal. Adjust the phase when an RGB or Component image still shows shimmer or "noise" after Tracking has been optimized.

Tip

Adjust the Phase after adjusting Tracking (see below). If some shimmer from a video or HDTV source persists, use the Noise Reduction controls (described on page 44) to remove high-frequency noise from the signal.

For best results, use a good test pattern such as a smooth gray consisting of a clear pattern of black and white pixels, or a similar "half on, half off" graphic image. Adjust the slidebar until the image stabilizes and each pixel is clearly defined. You may notice that you can stabilize the image at more than one point. Use either setting in such cases.

- Tracking (RGB or Component sources): Tracking determines the frequency of the pixel sampling clock, indicated by the number of incoming pixels per line, so that all pixels generated by a particular source are sampled. Steady flickering or several soft vertical stripes or bands across the entire image indicates poor pixel tracking. Proper pixel tracking helps ensure that the image quality is consistent across the screen, that aspect ratio is maintained and that pixel phase (see above) can be optimized.
- Sync Level (Component sources only): Select Sync Level to adjust the voltage level of the H9080FD Sync signal detection circuitry.
  Sync Level adjustment is occasionally necessary when a DVD player or HDTV source signal drops "below black" (for example, during scenes with explosions or when subtitles are present) and causes the projector to temporarily lose sync. If the Sync Level from the source is persistently too low, the projector won't sync with the source at all.
  The range is from 50 to 256 millivolts (mV) inclusive. The default setting is 240 mV and should rarely require adjustment.

SETUP

Use the controls in the SETUP menu, shown in Figure 4-19, to change the display orientation and perform other, common installation tasks.

Figure 4-19: H9080FD SETUP Menu

- **Language:** Select Language and press the ◀ or ▶ buttons to change the OSD Language. The H9080FD can display the menus in English, Español, Français, Deutsch, Nederlands, Italiano, 繁體中文, and 简体中文.
  Source Enable: To enable or disable selection of a source, choose Source Enable and press ENTER. This displays the Source Enable sub-menu, shown in Figure 4-20.

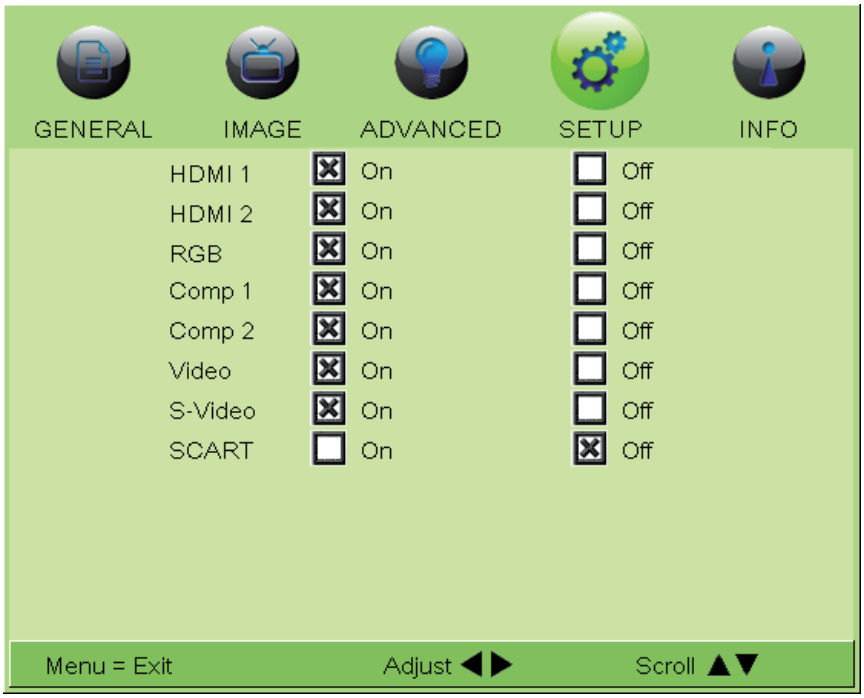

Figure 4-20: Source Enable Sub-Menu

- HDMI 1/HDMI 2: Enables or disables the HDMI 1 and HDMI 2 sources.
- RGB: Enables or disables the RGB source.
- Comp 1/Comp 2: Enables or disables the Component 1 and Component 2 sources.
- Video: Enables or disables the Composite video source.

Note If either Component 1 or Video is enabled, SCART must be disabled.

- S-Video: Enables or disables the S-Video source.
- SCART: Enables or disables the SCART RGBS source.

Note If SCART is enabled, both Component 1 and Video must be disabled.

- **Auto Power Off:** Set Auto Power Off to On to have the H9080FD turn itself off after 20 minutes of inactivity (no source signal present).
- **Auto Power On:** Set Auto Power On to On causes the projector to automatically power up when AC power is present. If the projector is plugged into a switched AC outlet, this allows the projector to be turned on using a wall switch instead of the remote control unit. If you do not need this capability, set Auto Power On to Off (this is the default setting).
- **Rear Projection:** This control reverses all images and menus, and is necessary when the projector is used in rear-projection applications. The default is Off.
- **Ceiling Mode:** This control flips the image so the projector can be used in ceiling mounted installations.
- **Trigger-1:** Select the primary screen trigger condition:
    - LED: Triggers the screen when the LED is turned on.
    - 16:9, Letterbox, 4:3, or 4:3 Narrow: Triggers the screen when the selected aspect ratio is active.
    - RS232: Triggers the screen when the RS232 “Trigger On” command is received.
- **Trigger-2:** Select the secondary screen trigger condition (see descriptions for Trigger 1).

Note Trigger commands are deactivated when a PIP source is active.

- **Factory Reset:** Select Factory Reset to restore all projector settings - except those listed below - to their factory-default values:
    - LED Hours
    - Model Name / Serial Number
    - Language
    - User Memory 1 / User Memory 2

INFO

Access the INFO Menu, shown in Figure 4-19, to view information that uniquely identifies your projector and indicates its current operational status:

- Model Name
- Unit Serial Number
- Software Version
- Active/PIP Source
- Pixel Clock
- Signal Format
- H/V Refresh Rate
- LED Hours (number of LED hours elapsed since the last reset)
- LED Hour Reset

Should you ever need to contact Vivitek Technical Support, this information will help them answer your questions and/or resolve product performance issues.

Figure 4-21: H9080FD INFO Menu

MAINTENANCE AND TROUBLESHOOTING 5

5.1 Cleaning the Intake and Exhaust Vents

Cleaning the Air Vents

The projector intake/exhaust vents should be cleaned every 500 hours of operation. In dustier environments, it is recommend to clean the projector more frequently to prevent damage or performance degradation.

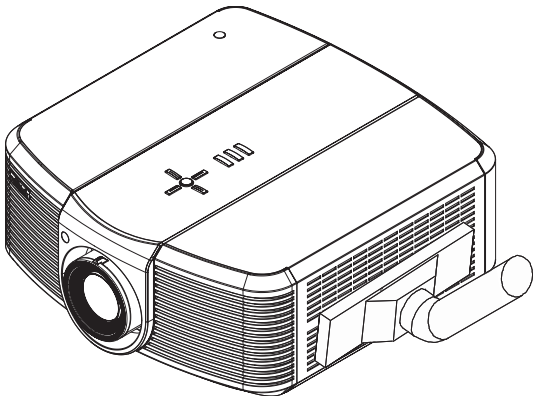

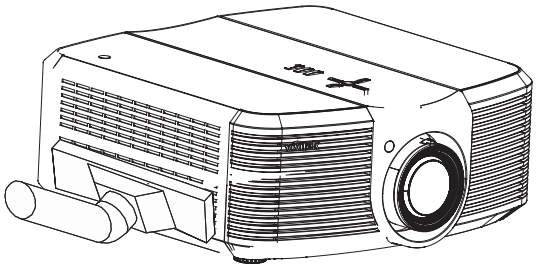

5.2 Troubleshooting Tips

Table 5-1 provides some general guidelines for troubleshooting problems you may encounter with the H9080FD. If the suggested solutions fail to resolve the problem or if you encounter an issue not described here, please contact Vivitek Technical Support.

Symptom	Possible Cause(s)	Solution
The projector does not turn on.	• The H9080FD is not plugged in or the AC outlet is not active.	• Ensure that the H9080FD is plugged in and that the AC outlet is active.
The remote control does not work correctly.	• The batteries have run out. • IR code set mismatch between remote control unit and projector.	• Replace the batteries. • Press and hold the LIGHT and ENTER remote control buttons simultaneously until the remote control back-lighting “blinks” (approximately five seconds). Then, try again.
The projector is on and OSD menus appear, but there is no video image on-screen.	• Incorrect source selection. • Source component is not turned on. • Source component is connected incorrectly or not at all.	• Select the correct source. • Turn on the source. • Check cable connection from source component to projector.
A projected image from a DVD is split or otherwise scrambled.	• DVD player is connected to the Component input and set to progressive scan mode.	• Turn off progressive scan on the DVD player.
Image is blurred.	• The lens is not correctly focused.	• Adjust the focus with the remote control.
Image is too bright and/or lacks definition in the bright areas of the image.	• Contrast is set too high.	• Lower the contrast setting.
Image appears “washed out” and/or dark areas appear too bright.	• Brightness is set too high.	• Lower the brightness setting.
Colors in the image are swapped; for example, reds appear blue or vice versa.	• The Red/Pr, Green/Y or Blue/Pb outputs from the source are connected to the wrong inputs on the H9080FD.	• Ensure that the source outputs are connected to the correct H9080FD input.

Table 5-1: Troubleshooting Chart

SERIAL INTERFACE SPECIFICATIONS 6

6.1 Transfer Specifications

Item	Specifications
Transmission Speed	38400 bps
Data Length	8 bit
Parity	None
Stop Bit	1
Flow Control	None

6.2 RS-232 Commands

There are 2 types of commands:

- Key commands
- Operation commands

All commands start with 2 letters as shown in the following:

- “ky” for key commands.
- “op” for operations commands.

- **Key Commands**

  The following example is the syntax for key commands:

  ky <keyname> [CR]

IR Codes and Keynames				
No.	**Code 1**	**Keyname**	**Remote Button**	**Description**
1.	0x01	pow.on	ON	Turn power on.
2.	0x09	pow.off	OFF	Turn power off.
3.	0x15	menu	MENU	Bring up or cancel menu display.
4.	0x17	enter	ENTER	Key pad enter.
5.	0x18	cur.down	▼	Key pad down arrow.
6.	0x1A	cur.up	▲	Key pad up arrow.
7.	0x1D	cur.left	◀	Key pad left arrow.
8.	0x1F	cur.righ	▶	Keypad right arrow.
9.	0x80	bright	BRIGHT	Bring up or cancel brightness slide bar.
10.	0x81	contrast	CONT	Bring up or cancel contrast slide bar.
11.	0x82	sharp	SHARP	Bring up or cancel sharpness slide bar.
12.	0x83	nr	NR	Bring up or cancel noise reduction slide bar.
13.	0x85	gam.sw	GAMMA	Switch to the next gamma.

IR Codes and Keynames				
No.	**Code 1**	**Keyname**	**Remote Button**	**Description**
14.	0x8B	src.1	HDMI1	Switch the active source to HDMI 1.
15.	0x8C	src.2	HDMI2	Switch the active source to HDMI 2.
16.	0x8D	src.3	RGB	Switch the active source to RGB.
17.	0x8E	src.4	COMP1	Switch the active source to COMP 1.
18.	0x8F	src.5	VIDEO	Switch the active source to VIDEO.
19.	0x89	src.6	COMP2	Switch the active source to COMP 2.
20.	0x93	osc.sw	OS	Switch to the next Overscan mode.
21.	0x98	mem.1	USER 1	Recall user memory associated with the User 1 key.
22.	0x99	mem.2	USER 2	Recall user memory associated with the User 2 key.
23.	0x9A	color.temp	TEMP	Switch the color temperature.
24.	0x9D	asp.sw	ASPECT RATIO	Switch to the next aspect ratio.
25.	0xA3	pip.sw	PIP	Switch to next “PIP Select” state.
26.	0xAA	pip.swap	SWAP	Swap the PIP image with the active source image.
27.	0xAD		MP	Changes the OSD menu position when OSD is activated.

Table 6-1: IR Codes and Keynames

- **Operations Commands**

The following example is the syntax for operations commands:

op <operation> <command> [CR]

No.	Function	Command	Action on unit
1	Set	= <value>	Makes the unit take that value.
2	Get	?	Asks what the current value is.
3	Increment	+	Adds 1 to the current value.
4	Decrement	-	Subtracts 1 from the current value.
5	Execute	(none)	Performs an action.

Table 6-2: Operations Command Functions

Operation	Command	Values	Notes
aspect	= ?	0 = 16:9 1 = Letterbox 2 = 4:3 3 = 4:3 Narrow 4 = Native	
memory	= ?	0 = User Memory 1 1 = User Memory 2 4 = Default	
save.mem	=	0 = User Memory 1 1 = User Memory 2	
bright	= ? + -	0 - 200	
contrast	= ? + -	0 - 200	
saturat	= ? + -	0 - 200	
tint	= ? + -	0 - 200	
sharp.simple	= ? + -	0 - 200	
sharp.mode	= ?	0 = Simple 1 = Advanced	
horiz.sharp	= ? + -	0 - 200	
vert.sharp	= ? + -	0 - 200	
diag.sharp	= ? + -	0 - 200	
sharp.over	= ? + -	0 - 200	
horiz.text	= ? + -	0 - 200	
vert.text	= ? + -	0 - 200	
diag.text	= ? + -	0 - 200	
text.over	= ? + -	0 - 200	
noise.thresh	= ? + -	0 - 200	
nr.simple	= ? + -	0 - 200	
nr.mode	= ?	0 = Simple 1 = Advanced	
nr.general	= ? + -	0 - 200	
block.reduct	= ? + -	0 - 200	
mosq.noise	= ? + -	0 - 200	

Operation	Command	Values	Notes
overscan	= ?	0 = Off 1 = Crop 2 = Zoom	
source.sel	= ?	0 = HDMI 1 1 = HDMI 2 2 = RGB 3 = YPbPr 1 4 = YPbPr 2 5 = S-Video 6 = Video 7 = SCART	
pip.select	= ?	0 = Off 1 = HDMI 1 2 = HDMI 2 3 = RGB 4 = YPbPr 1 5 = YPbPr 2 6 = S-Video 7 = Video 8 = SCART	
resync	(execute)		
color.space	= ?	0 = Auto 1 = REC709 2 = REC601 3 = RGB-PC 4 = RGB-Video	
video.stand	= ?	0 = Auto 1 = NTSC 2 = PAL 3 = SECAM	
gamma	= ?	0 = CRT 1 = Film 2 = Cinema 3 = Bright 4 = Graphics	
color.temp	= ?	0 = Warm 1 = Standard 2 = Cool 3 = Cooler	
dlp.frame	= ?	0 = Auto 2 = 48 Hz 3 = 50 Hz 4 = 60 Hz	
color.gamut	= ?	0 = Auto 1 = REC709 2 = SMPTE C 3 = EBU 4 = Native 5 = DCI	

Operation	Command	Values	Notes
dblack	= ?	0 = Off 1 = On (4x DB) 2 = Ultra-DI (8x DB) 3 = Infinity	
red.off	= ? + -	0-200	
green.off	= ? + -	0-200	
blue.off	= ? + -	0-200	
red.gain	= ? + -	0-200	
green.gain	= ? + -	0-200	
blue.gain	= ? + -	0-200	
vert.pos	= ? + -	0-200	
horiz.pos	= ? + -	0-200	
phase	= ? + -	0-200	
tracking	= ? + -	0-200	
sync.level	= ? + -	0-200	
pip.pos	= ?	0 = Top left 1 = Top right 2 = Bottom left 3 = Bottom right 4 = PBP 5 = Split screen	
menu.pos	= ?	0 = Top left 1 = Top right 2 = Bottom left 3 = Bottom right 4 = Center	
blank.screen	= ?	0 = Black 1 = Blue 2 = White 3 = Logo	
auto.pow.off	= ?	0 = Off 1 = On	
auto.pow.on	= ?	0 = Off 1 = On	
rear.proj	= ?	0 = Off 1 = On	
ceil.mode	= ?	0 = Off 1 = On 2 = Auto	
logo.disp	= ?	0 = Off 1 = On	

Operation	Command	Values	Notes
trig.1	= ?	0 = LED 1 = 16:9 2 = Letterbox 3 = 4:3 4 = 4:3 Narrow 5 = RS232 6 = On 7 = Off	
trig.2	= ?	0 = LED 1 = 16:9 2 = Letterbox 3 = 4:3 4 = 4:3 Narrow 5 = RS232 6 = On 7 = Off	
auto.source	= ?	0 = Off 1 = On	
model.name	?	<string>	
ser.number	?	<string>	
soft.version	?	<string>	
act.source	?	0 = HDMI 1 1 = HDMI 2 2 = RGB 3 = YPbPr 1 4 = YPbPr 2 5 = S-video 6 = Video 7 = SCART	
pip.source	?	0 = HDMI 1 1 = HDMI 2 2 = RGB 3 = YPbPr 1 4 = YPbPr 2 5 = S-video 6 = Video 7 = SCART	
h.refresh	?	<number>	KHz
v.refresh	?	<number>	Hz
pixel.clock	?	<number>	MHz
signal	?	<string>	
led.hours	?	<number>	
total.hours	?	<number>	
led.reset	(execute)		
fact.reset	(execute)		
blue.only	=	0 = Off 1 = On	

Operation	Command	Values	Notes
pattern	=	0 = White 1 = Black 2 = Red 3 = Green 4 = Blue 5 = Cyan 6 = Magenta 7 = Yellow 8 = ANSI Checkerboard 9 = Horizontal Gray Ramp 10 = Focus Grid 11 = Off	
language	= ?	0 = English 1 = Spanish 2 = French 3 = German 4 = Dutch 5= Italian 6 = Traditional Chinese 7 = Simplified Chinese	OSD language only

Table 6-3: Operations Commands

SPECIFICATIONS 7

7.1 H9080FD Specifications

Table 7-1 lists the H9080FD specifications.

Optics	
Microdisplay	TI DLP 1080p 0.95” DMD
Resolution	1920x1080, Full HD
Projection Lens	• Standard Lens throw ratio: 1.85 to 2.4:1 • Optional Lens throw ratio: 1.56 to 1.86:1
Lens Shift	• Vertical ± 120% • Horizontal ± 30%
Image width range	8ft to 30 ft (see screen size table)
Electrical	
I/O - Video Input	• DB15 pin RGB • 2 x HDMI • Component 1 - RCA • Component 2 - BNC • Composite (RCA) • S-Video
I/O - Power Input	IEC-320-C14receptacle
Projector Control	• Hard wired via RS-232 • IR Remote • Keypad control method
Zoom/Focus/Offsets	Manual lens shift, Manual zoom/focus
Projection Modes	Front/ Rear/ Ceiling (Front/Rear)

Power	• Input Voltage: 100 ~ 240V
	• Power Consumption
	  • 110V: BrilliantColor ON 280W, BrilliantColor OFF 240W, Standby <1W (Typical).
	  • 220V: BrilliantColor ON 270W, BrilliantColor OFF 230W, Standby <1W (Typical).

Safety	UL 60950 -1, RoHS compatible , IEC-60825-1
EMI	FCC Class B

Mechanical	
Weight (without packing)	16.6Kg / 36.6lb
Dimensions	520(W) x 224.60(H) x 548(D) mm
Adjustable feet	2” max travel
Reliability	
Operating Temperature	• 7500 ft.~10000 ft. (2286m ~ 3048m): 50 ~ 95°F (10 ~ 35°C), Humidity: 0% ~ 85% • Under 7,500 ft. (2286m): 50 ~ 104°F (10 ~ 40°C), Humidity: 0% ~ 85%
Storage	-4 ~ 140°F (-20 ~ 60°C), Humidity: 5% ~ 90%
Standard Accessories	
Power Cord	US 110VAC
Remote and Batteries	For set up use only
HDMI Cable	For set up use only
User Manual CD	For set up use only
Warranty Card	
Inspection Card	
Q Pass Label	For set up use only
Allen Wrench	For lens shift adjustment

Note: Specifications are subject to change without notice.

Table 7-1: H9080FD Specifications

7.2 H9080FD Dimensions

Figure 7-1 shows the H9080FD dimensions, in millimeters.

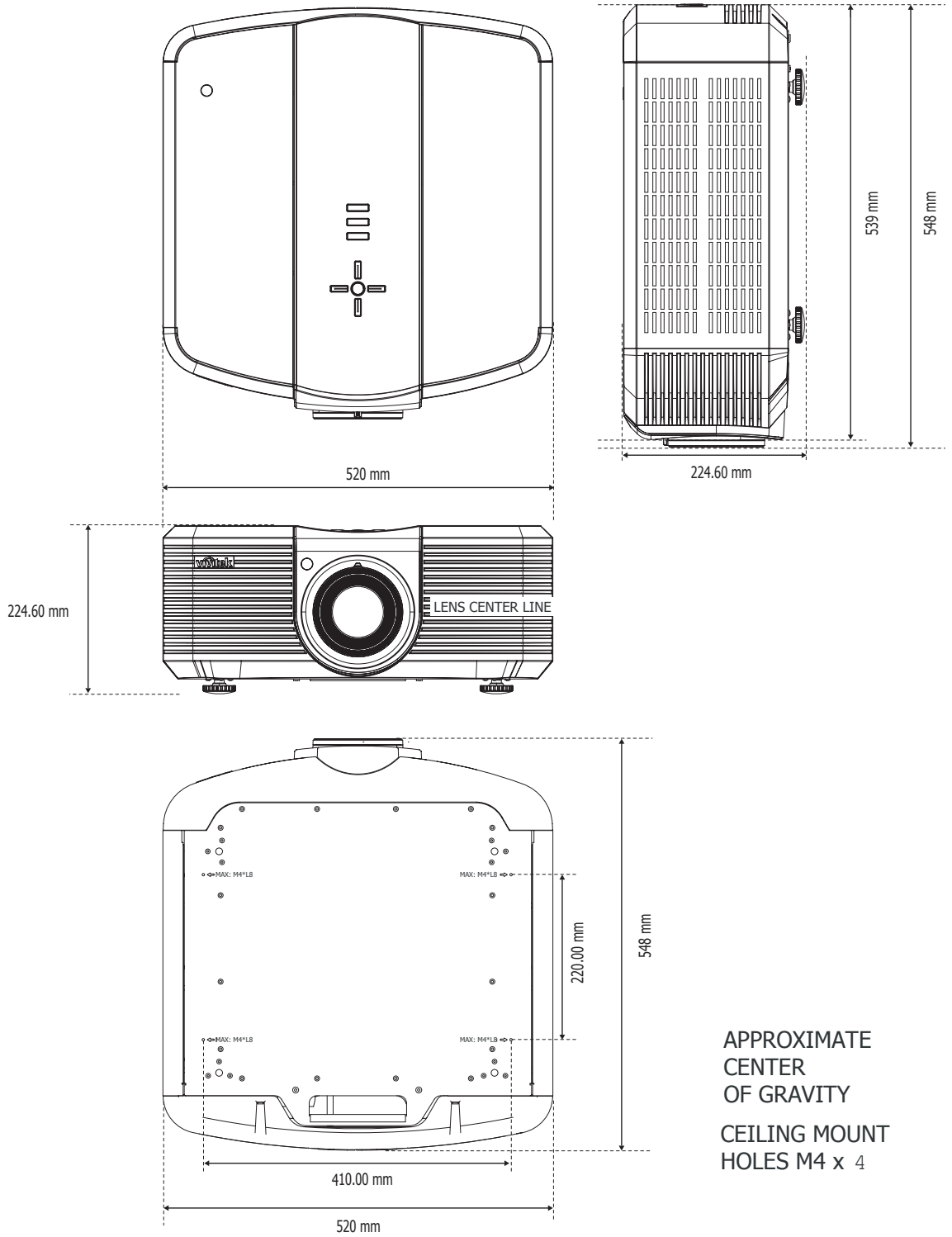

Figure 7-1: H9080FD Dimensions

7.3 Supported Timings

Table 7-2 lists the signal types supported by each input on the H9080FD.

Format	Resolution	Refresh Rate (Hz)	Supported? (✓ = Yes)			
			RGB	Component1 Component2	HDMI 1 HDMI 2	Composite S-Video
PC	640x480	59.94	✓		✓	
	640x480	75	✓		✓	
	640x480	85	✓		✓	
	800x600	60.32	✓		✓	
	800x600	75	✓		✓	
	800x600	85.06	✓		✓	
	848x480	47.95	✓		✓	
	848x480	59.94	✓		✓	
	1024x768	60	✓		✓	
	1024x768	75.03	✓		✓	
	1024x768	85.03	✓		✓	
	1280x720	47.95	✓		✓	
	1280x1024	60.02	✓		✓	
	1280x1024	75.02	✓		✓	
	1280x1024	85.02	✓		✓	
	1600x1200	60	✓		✓	
	1920x1080	47.95	✓		✓	
	1680x1050	59.94	✓		✓	
Apple Mac	640x480	66.59	✓		✓	
	832x624	74.54	✓		✓	
NTSC	NTSC (M, 4.43)	59.94				✓
PAL	PAL (B, G, H, I)	50				✓
	PAL (N)	50				✓
	PAL (M)	59.94				✓
SECAM	SECAM (M)	50				✓

Format	Resolution	Refresh Rate (Hz)	Supported? (✓ = Yes)			
			RGB	Component1 Component2	HDMI 1 HDMI 2	Composite S-Video
SDTV	480i	59.94		✓	✓	
	576i	50		✓	✓	
EDTV	480p	59.94	✓	✓	✓	
	576p	50	✓	✓	✓	
HDTV	720p	50	✓	✓	✓	
	720p	59.94	✓	✓	✓	
	720p	60	✓	✓	✓	
	1035i	60	✓	✓	✓	
	1080i	50	✓	✓	✓	
	1080i (Aus)	50	✓	✓	✓	
	1080i	59.94	✓	✓	✓	
	1080i	60	✓	✓	✓	
	1080p	23.98	✓	✓	✓	
	1080p	24	✓	✓	✓	
	1080p	25	✓	✓	✓	
	1080p	29.97	✓	✓	✓	
	1080p	30	✓	✓	✓	
	1080p	50	✓	✓	✓	
	1080p	59.94	✓	✓	✓	
	1080p	60	✓	✓	✓	

Table 7-2: Supported Signal Timings by Input

7.4 Projection Distance and Screen Size

Note

Screen Size: This is the size of the screen not the size of the projection.

In case of display 16:9 picture on the whole 16:9 Screen

16:9 Screen TR: 1.85~2.4 TR = PD / SW Unit: Inch

Screen Size			Projection Distance	
Diagonal	Width	Height	Min.	Max.
60	52.29	29.41	96.74	125.50
70	61.01	34.32	112.87	146.42
72	62.75	35.30	116.09	150.60
80	69.72	39.22	128.99	167.34
82	71.47	40.20	132.21	171.52
84	73.21	41.18	135.44	175.71
90	78.44	44.12	145.11	188.26
92	80.18	45.10	148.34	192.44
100	87.16	49.02	161.24	209.17
106	92.38	51.97	170.91	221.72
110	95.87	53.93	177.36	230.09
120	104.59	58.83	193.49	251.01
123	107.20	60.30	198.32	257.28
133	115.92	65.20	214.45	278.20
135	117.66	66.18	217.67	282.38
150	130.73	73.54	241.86	313.76
170	148.16	83.34	274.10	355.59
200	174.31	98.05	322.48	418.35
250	217.89	122.56	403.09	522.93
300	261.47	147.07	483.71	627.52

In case of display 16:9 picture on the whole 4:3 Screen

4:3 Screen TR: 1.85~2.4 TR = PD / SW Unit: Inch

Screen Size			Projection Distance	
Diagonal	Width	Height	Min.	Max.
60	48.00	36.00	88.80	115.20
70	56.00	42.00	103.60	134.40
72	57.60	43.20	106.56	138.24
80	64.00	48.00	118.40	153.60
82	65.60	49.20	121.36	157.44
84	67.20	50.40	124.32	161.28
90	72.00	54.00	133.20	172.80
92	73.60	55.20	136.16	176.64
100	80.00	60.00	148.00	192.00
106	84.80	63.60	156.88	203.52
110	88.00	66.00	162.80	211.20
120	96.00	72.00	177.60	230.40
123	98.40	73.80	182.04	236.16
133	106.40	79.80	196.84	255.36
135	108.00	81.00	199.80	259.20
150	120.00	90.00	222.00	288.00
170	136.00	102.00	251.60	326.40
200	160.00	120.00	296.00	384.00
250	200.00	150.00	370.00	480.00
300	240.00	180.00	444.00	576.00

In case of display 16:9 picture on the whole 16:9 Screen

16:9 Screen TR: 1.85~2.4 TR = PD / SW Unit: mm

Screen Size			Projection Distance	
Diagonal	Width	Height	Min.	Max.
60	1328	747	2457	3188
70	1550	872	2867	3719
72	1594	897	2949	3825
80	1771	996	3276	4250
82	1815	1021	3358	4357
84	1860	1046	3440	4463
90	1992	1121	3686	4782
92	2037	1146	3768	4888
100	2214	1245	4095	5313
106	2347	1320	4341	5632
110	2435	1370	4505	5844
120	2656	1494	4915	6376
123	2723	1532	5037	6535
133	2944	1656	5447	7066
135	2989	1681	5529	7173
150	3321	1868	6143	7969
170	3763	2117	6962	9032
200	4427	2490	8191	10626
250	5534	3113	10239	13282
300	6641	3736	12286	15939

In case of display 16:9 picture on the whole 4:3 Screen

4:3 Screen TR: 1.85~2.4 TR = PD / SW Unit: mm

Screen Size			Projection Distance	
Diagonal	Width	Height	Min.	Max.
60	1219	914	2256	2926
70	1422	1067	2631	3414
72	1463	1097	2707	3511
80	1626	1219	3007	3901
82	1666	1250	3083	3999
84	1707	1280	3158	4097
90	1829	1372	3383	4389
92	1869	1402	3458	4487
100	2032	1524	3759	4877
106	2154	1615	3985	5169
110	2235	1676	4135	5364
120	2438	1829	4511	5852
123	2499	1875	4624	5998
133	2703	2027	5000	6486
135	2743	2057	5075	6584
150	3048	2286	5639	7315
170	3454	2591	6391	8291
200	4064	3048	7518	9754
250	5080	3810	9398	12192
300	6096	4572	11278	14630