myprojectorlamps.com

The most trusted, dependable name in projector lamp sales.

http://www.myprojectorlamps.com

http://www.myprojectorlamps.ca

http://www.myprojectorlamps.eu

The following projector manual has not been modified or altered in any way.

Copyright

This publication, including all photographs, illustrations and software, is protected under international copyright laws, with all rights reserved. Neither this manual, nor any of the material contained herein, may be reproduced without written consent of the author.

© Copyright March, 2008

Disclaimer

The information in this document is subject to change without notice. The manufacturer makes no representations or warranties with respect to the contents hereof and specifically disclaims any implied warranties of merchantability or fitness for any particular purpose. The manufacturer reserves the right to revise this publication and to make changes from time to time in the content hereof without obligation of the manufacturer to notify any person of such revision or changes.

Trademark Recognition

Kensington is a U.S. registered trademark of ACCO Brand Corporation with issued registrations and pending applications in other countries throughout the world.

All other product names used in this manual are the properties of their respective owners and are acknowledged.

Important Safety Information

> ***Important:***
> *It is strongly recommended that you read this section carefully before using the projector. These safety and usage instructions will ensure that you enjoy many years of safe use of the projector. Keep this manual for future reference.*

Symbols Used

Warning symbols are used on the unit and in this manual to alert you of hazardous situations.

The following styles are used in this manual to alert you to important information.

> ***Note:***
> *Provides additional information on the topic at hand.*

> ***Important:***
> *Provides additional information that should not be overlooked.*

> ***Caution:***
> *Alerts you to situations that may damage the unit.*

> ***Warning:***
> *Alerts you to situations that may damage the unit, create a hazardous environment, or cause personal injury.*

Throughout this manual, component parts and items in the OSD menus are denoted in bold font as in this example:
"Push the **Menu** button on the remote control to open the **Main** menu."

General Safety Information

- Do not open the unit case. Aside from the projection lamp, there are no user-serviceable parts in the unit. For servicing, contact qualified service personnel.
- Follow all warnings and cautions in this manual and on the unit case.
- The projection lamp is extremely bright by design. To avoid damage to eyes, do not look into the lens when the lamp is on.
- Do not place the unit on an unstable surface, cart, or stand.
- Avoid using the system near water, in direct sunlight, or near a heating device.
- Do not place heavy objects such as books or bags on the unit.

Power Safety

- Only use the supplied power cord.
- Do not place anything on the power cord. Place the power cord where it will not be in the way of foot traffic.
- Remove the batteries from the remote control when storing or not in use for a prolonged period.

Replacing the Lamp

Replacing the lamp can be hazardous if done incorrectly. See *Replacing the Projection Lamp* on page 34 for clear and safe instructions for this procedure. Before replacing the lamp:

- Unplug the power cord.
- Allow the lamp to cool for about one hour.

Cleaning the Projector

- Unplug the power cord before cleaning. See *Cleaning the Projector* on page 37.
- Allow the lamp to cool for about one hour.

Regulatory Warnings

Before installing and using the projector, read the regulatory notices in the *Regulatory Compliance* section on page 48.

Main Features

- *Lightweight unit, easy to pack away and transport.*
- *Compatible with all major video standards including NTSC, PAL, and SECAM.*
- *A high brightness rating allows for presentations in daylight or in lit rooms.*
- *Supports resolutions up to SXGA at 16.7 million colors to deliver crisp, clear images.*
- *Flexible setup allows for front, rear projections.*
- *Line-of-vision projections remain square, with advanced keystone correction for angled projections.*
- *Input source automatically detected.*

About this manual

This manual is intended for end users and describes how to install and operate the DLP projector. Wherever possible, relevant information—such as an illustration and its description—has been kept on one page. This printer-friendly format is both for your convenience and to help save paper, thereby protecting the environment. It is suggested that you only print sections that are relevant to your needs.

Table of Contents

GETTING STARTED **1**

PACKING CHECKLIST 1
VIEWS OF PROJECTOR PARTS 2
DS420/DX420 Front-right View *2*
Top view—On-screen Display (OSD) buttons and LEDs *3*
Rear view *4*
Bottom view *5*
REMOTE CONTROL PARTS 6
REMOTE CONTROL OPERATING RANGE 8
PROJECTOR AND REMOTE CONTROL BUTTONS 8
Remote Control *8*

SETUP AND OPERATION **9**

INSERTING THE REMOTE CONTROL BATTERIES 9
CONNECTING INPUT DEVICES 10
STARTING AND SHUTTING DOWN THE PROJECTOR 11
SETTING AN ACCESS PASSWORD (SECURITY LOCK) 13
ADJUSTING THE PROJECTOR LEVEL 15
ADJUSTING THE ZOOM, FOCUS AND KEYSTONE 16
ADJUSTING THE VOLUME 17

ON-SCREEN DISPLAY (OSD) MENU SETTINGS **18**

OSD MENU CONTROLS 18
Navigating the OSD *18*
SETTING THE OSD LANGUAGE 19
OSD MENU OVERVIEW 20
OSD SUB-MENU OVERVIEW 21
IMAGE MENU 22
Advanced1 Feature *23*
Color Manager *24*
COMPUTER MENU 25
VIDEO/AUDIO MENU 26
Audio *27*
INSTALLATION I MENU 28
INSTALLATION II MENU 29
Advanced2 Feature *30*
OSD Menu Setting *31*
Peripheral Test *31*
Lamp Hour Reset *32*
Factory Reset *33*
Status *33*

MAINTENANCE AND SECURITY **34**

REPLACING THE PROJECTION LAMP 34
Resetting the Lamp *36*
CLEANING THE PROJECTOR 37
Cleaning the Lens *37*
Cleaning the Case *37*
USING THE KENSINGTON® LOCK 38

TROUBLESHOOTING **39**

COMMON PROBLEMS AND SOLUTIONS 39
TIPS FOR TROUBLESHOOTING 39
LED ERROR MESSAGES 40
IMAGE PROBLEMS 40
LAMP PROBLEMS 41
REMOTE CONTROL PROBLEMS 41
AUDIO PROBLEMS 41

HAVING THE PROJECTOR SERVICED 41

SPECIFICATIONS 42

SPECIFICATIONS 42
Input Connectors 42
PROJECTION DISTANCE VS. PROJECTION SIZE 43
DS420 Projection Distance and Size Table 43
DX420 Projection Distance and Size Table 43
DS420 TIMING MODE TABLE 44
DX420 TIMING MODE TABLE 45
PROJECTOR DIMENSIONS 47

REGULATORY COMPLIANCE 48

FCC WARNING 48
CANADA 48
SAFETY CERTIFICATIONS 48
EN 55022 WARNING 48

GETTING STARTED

Packing Checklist

Carefully unpack the projector and check that the following items are included:

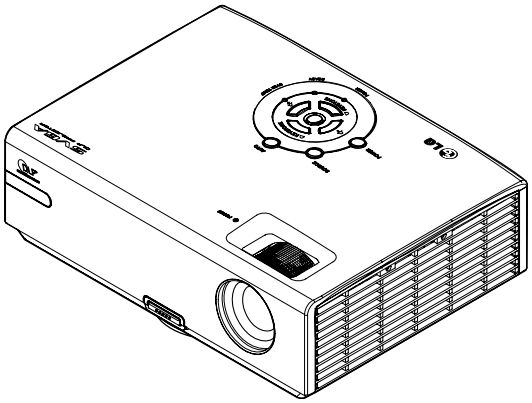

DS420 DLP PROJECTOR

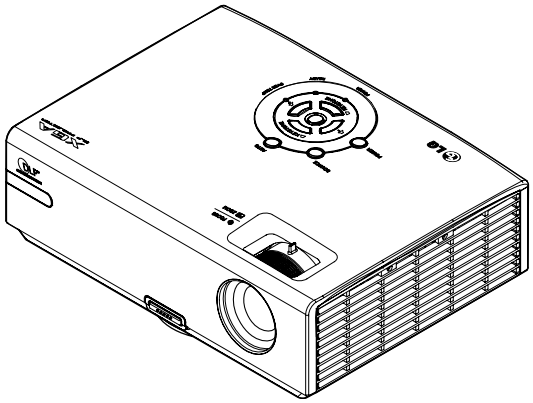

DX420 DLP PROJECTOR

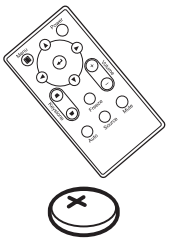

REMOTE CONTROL (WITH ONE 3V CR2025 BATTERY)

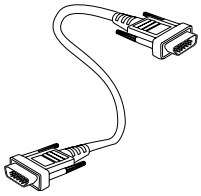

RGB CABLE

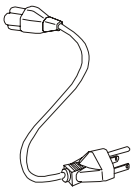

POWER CORD

AUDIO CABLE (OPTIONAL)

COMPONENT CABLE (OPTIONAL)

VIDEO CABLE (OPTIONAL)

S-VIDEO CABLE (OPTIONAL)

RGB TO COMPONENT ADAPTER (OPTIONAL)

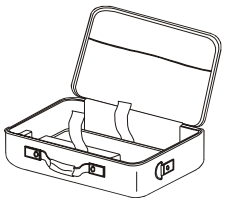

CARRYING CASE

CD-ROM (THIS USER'S MANUAL)

Contact your dealer immediately if any items are missing, appear damaged, or if the unit does not work. It is recommend that you keep the original packing material should you ever need to return the equipment for warranty service.

Caution:
Avoid using the projector in dusty environments.

Views of Projector Parts

DS420/DX420 Front-right View

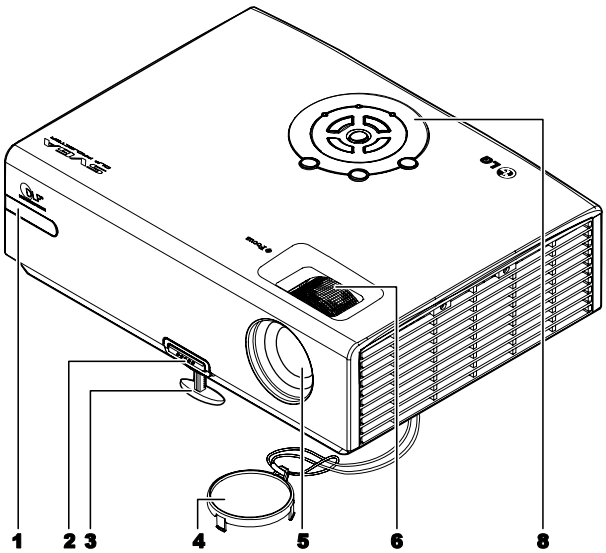

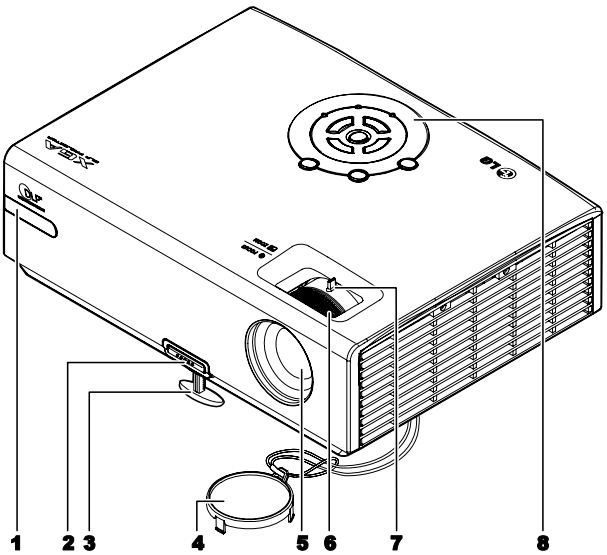

ITEM	LABEL	DESCRIPTION	SEE PAGE:
1.	IR receiver	Receiver for IR signal from remote control	*6*
2.	Height-adjuster button	Push to release height adjuster	*15*
3.	Height adjuster	Adjusts level of projector	
4.	Lens cap	Covers lens to protect when not in use	
5.	Lens	Remove lens cap before use	
6.	Focus ring	Focuses the projected image	*16*
7.	Zoom ring (DX Series only)	Enlarges the projected image	
8.	Function keys	See Top view—On-screen Display (OSD) buttons and LEDs.	*3*

Important:
Ventilation openings on the projector allow for good air circulation, which keeps the projector lamp cool. Do not obstruct any of the ventilation openings.

Top view—On-screen Display (OSD) buttons and LEDs

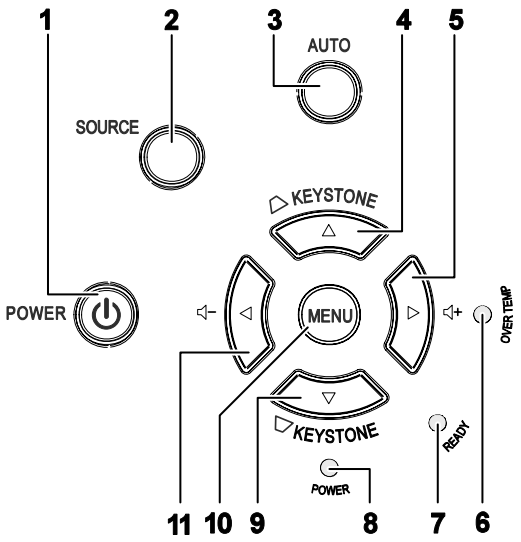

ITEM	LABEL	DESCRIPTION		SEE PAGE:
1.	⏻ (POWER)	Turns the projector On or Off		*11*
2.	SOURCE	Detects the input device		*10*
3.	AUTO	Optimizes image size, position, and resolution		
4.	▲ (Up cursor) / KEYSTONE	Navigates and changes settings in the OSD Quick Menu – For Keystone		*18*
5.	► (Right cursor) / VOL.	Navigates and changes settings in the OSD Quick Menu – For Volume		
6.	OVER TEMP LED	On	System over temperature	
		Off	Normal State	
7.	READY LED	Orange	Lamp is ready to be powered-on.	
		Flashing	Lamp not ready (Warm-up/shutting down/cooling) (see *LED Error Messages* on page 40)	
8.	POWER LED	Green	Power On	
		Off	Power Off (AC Off)	
		Flashing	Error code	
9.	▼ (Down cursor) / KEYSTONE	Navigates and changes settings in the OSD Quick Menu – For Keystone		*18*
10.	MENU	Open and exits the OSD buttons		
11.	◄ (Left cursor) / VOL	Navigates and changes settings in the OSD Quick Menu – For Volume		

Rear view

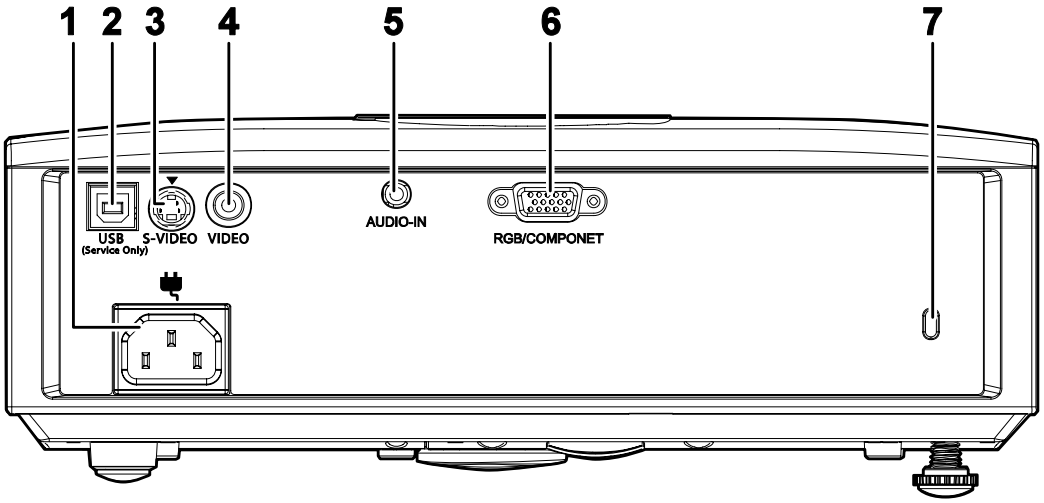

ITEM	LABEL	DESCRIPTION	SEE PAGE:
1.	AC IN	Connect the POWER CABLE	***11***
2.	USB (Service Only)	Connect the USB CABLE from a computer (service only)	***10***
3.	S-VIDEO	Connect the S-VIDEO CABLE from a video device	
4.	VIDEO	Connect the VIDEO CABLE from a video device	
5.	AUDIO-IN	Connect the AUDIO CABLE from the input device	
6.	RGB/COMPONENT	Connect the RGB CABLE from a computer and components	
7.	(Security Lock)	Secure to permanent object with a Kensington® Lock system	***38***

Note:
If your video equipment has both S-VIDEO and RCA jacks (composite video) connect to the S-VIDEO connector. S-VIDEO provides a better quality signal.

Bottom view

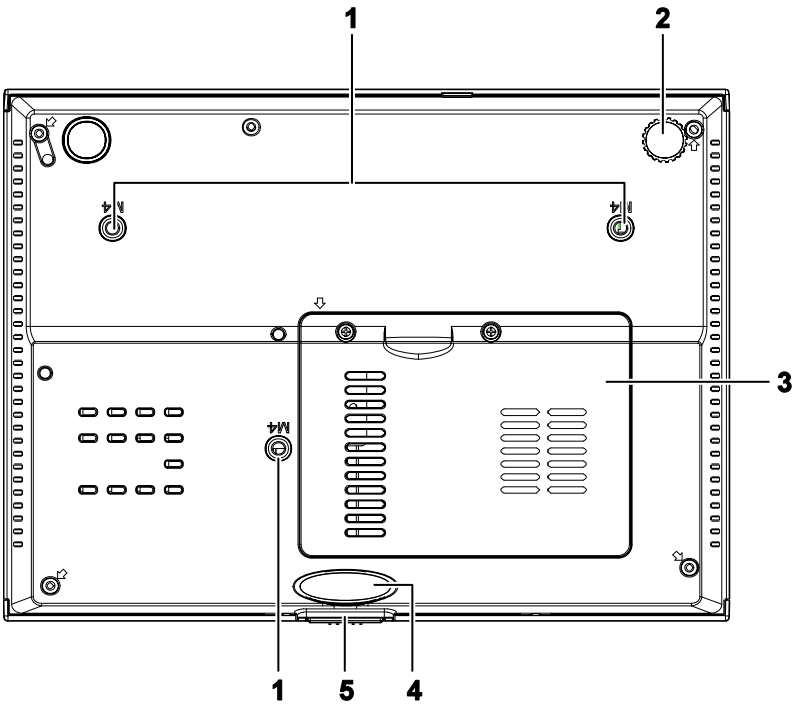

ITEM	LABEL	DESCRIPTION	SEE PAGE:
1.	Ceiling support holes	Contact your dealer for information on mounting the projector on a ceiling	
2.	Tilt adjustor	Rotate adjuster lever to adjust angle position.	*15*
3.	Lamp cover	Remove when changing the lamp.	*34*
4.	Height adjustor	Adjuster drops down when adjuster button is pushed.	*15*
5.	Height adjustor button	Push to release adjustor.	

Note:
When installing, ensure that you use only UL Listed ceiling mounts.

Remote Control Parts

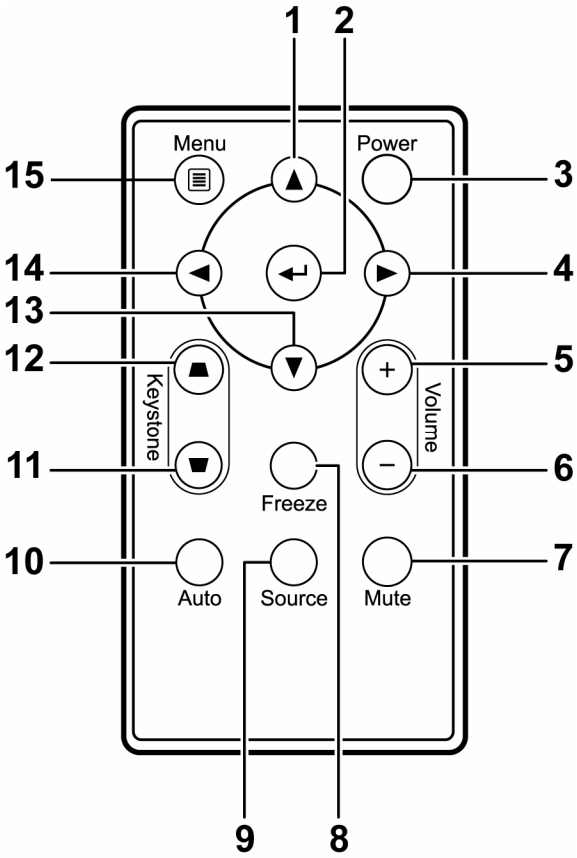

Important:
1. *Avoid using the projector with bright fluorescent lighting turned on. Certain high-frequency fluorescent lights can disrupt remote control operation.*

2. *Be sure nothing obstructs the path between the remote control and the projector. If the path between the remote control and the projector is obstructed, you can bounce the signal off certain reflective surfaces such as projector screens.*

3. *The buttons and keys on the projector have the same functions as the corresponding buttons on the remote control. This user's manual describes the functions based on the remote control.*

ITEM	LABEL	DESCRIPTION	SEE PAGE:
1.	Up cursor	Navigates and changes settings in the OSD	18
2.	Enter	Changes settings in the OSD	
3.	Power	Turns the projector On or Off	11
4.	Right cursor	Navigates and changes settings in the OSD	18
5.	Volume +	Increase volume	17
6.	Volume -	Decrease volume	
7.	Mute	Mutes the built-in speaker	
8.	Freeze	Freeze/unfreezes the on-screen picture	
9.	Source	Detects the input device	10
10.	Auto	Auto adjustment for frequency, tracking, size, position (RGB only)	
11.	Keystone top	Corrects image-trapezoid (wider top) effect	16
12.	Keystone bottom	Corrects image trapezoid (wider bottom) effect	
13.	Down cursor	Navigates and changes settings in the OSD	18
14.	Left cursor	Navigates and changes settings in the OSD	
15.	Menu	Opens the OSD	

Remote Control Operating Range

The remote control uses infrared transmission to control the projector. It is not necessary to point the remote directly at the projector. Provided you are not holding the remote perpendicular to the sides or the rear of the projector, the remote will function well within a radius of about 7 meters (23 feet) and 15 degrees above or below the projector level. If the projector does not respond to the remote control, move a little closer.

Projector and Remote Control Buttons

The projector can be operated using the remote control or the buttons on the top of the projector. All operations can be carried out with the remote control; however, the buttons on the projector are limited in use. The following illustration shows the corresponding buttons on the remote control and on the projector.

Remote Control

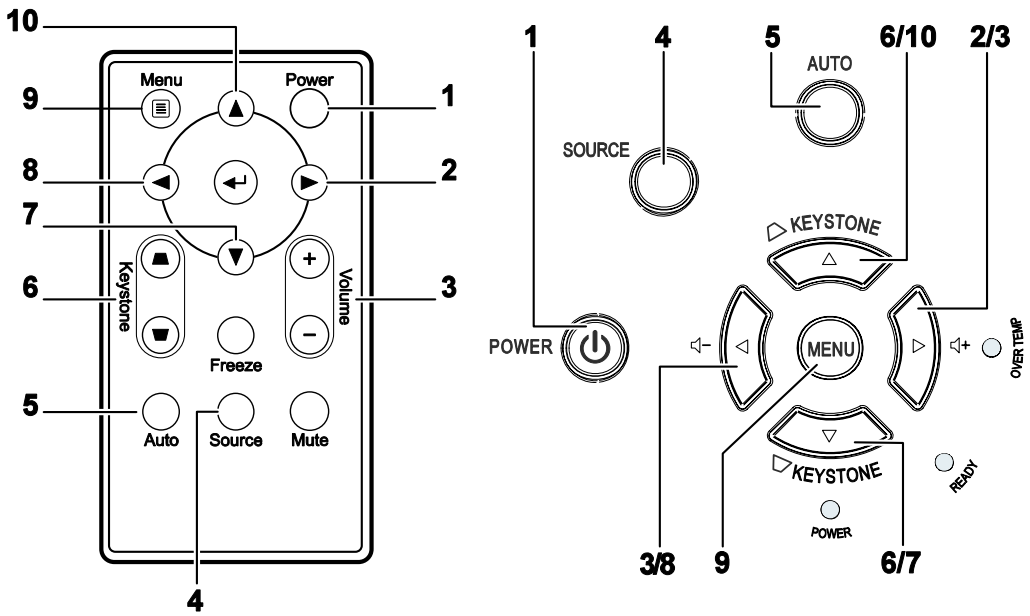

Some buttons on the projector have multiple functions. For example, item 6/7 on the projector functions as the keystone button and as the down cursor key.

Inserting the Remote Control Batteries

1. Remove the battery compartment cover by sliding the cover in the direction of the arrow **(A)**. Pull out the cover **(B)**.

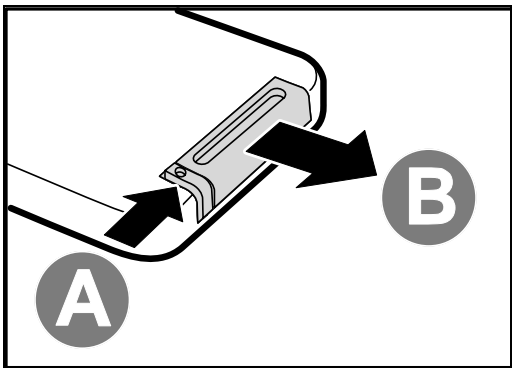

2. Insert the battery with the positive side facing up.

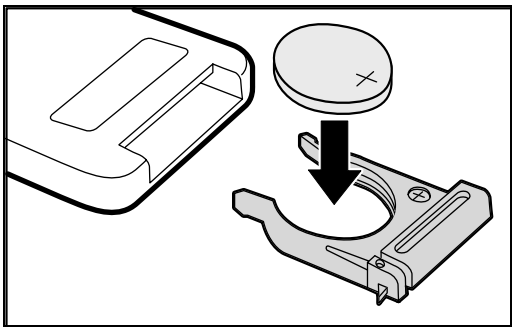

3. Replace the cover.

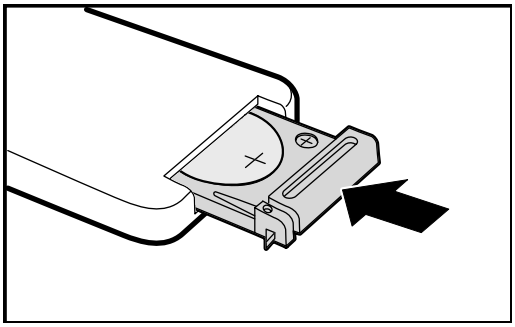

Caution:
1. *Only use a 3V lithium battery (CR2025).*

2. *Dispose of used batteries according to local ordinance regulations.*

3. *Remove the battery when not using the projector for prolonged periods.*

Connecting Input Devices

A PC or notebook computer and video devices can be connected to the projector at the same time. Video devices include DVD, VCD, and VHS players, as well as movie camcorders and digital still cameras. Check the user manual of the connecting device to confirm it has the appropriate output connector.

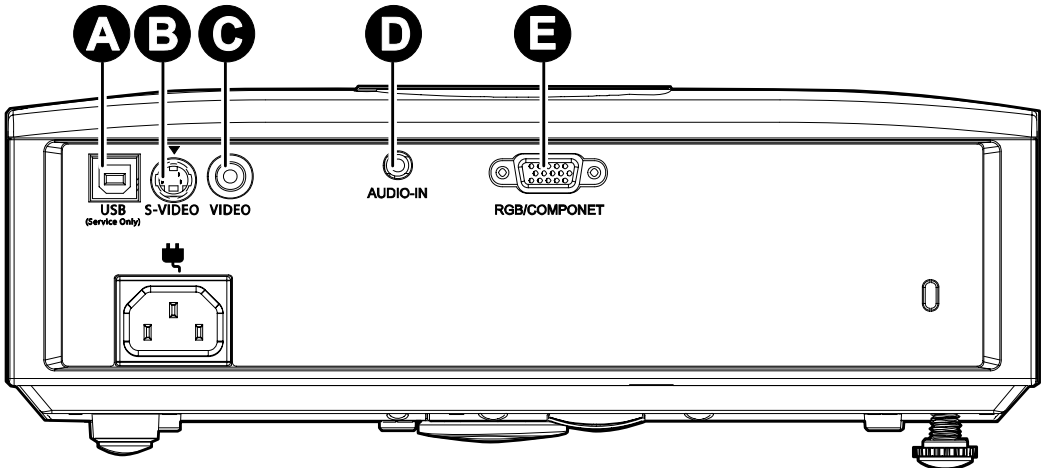

ITEM	LABEL	DESCRIPTION
A	USB (Service Only)	Connect the USB CABLE from a computer (service only).
B	S-VIDEO	Connect the S-VIDEO CABLE from a video device.
C	VIDEO	Connect the VIDEO CABLE from a video device.
D	AUDIO-IN	Connect the AUDIO CABLE from the computer's audio-out connector. Connect the AUDIO CABLE (mini jack-to-RCA x 2) from a video device.
E	RGB	Connect the RGB CABLE from a computer. Connect DVD input YCbCr / YPbPr, through optional RGB to COMPONENT ADAPTOR.

Warning:
As a safety precaution, disconnect all power to the projector and connecting devices before making connections.

Starting and Shutting down the Projector

1. Connect the power cord to the projector. Connect the other end to a wall outlet. The ⏻ **POWER** and **READY** LEDs on the projector light.

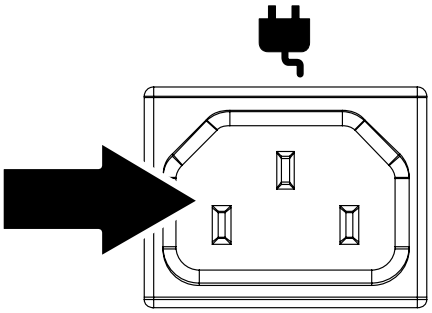

2. Turn on the connected devices.

3. Ensure the READY LED displays a solid orange and not a flashing orange. Then press the ⏻ **POWER** button to turn on the projector.

The projector splash screen displays and connected devices are detected.

See *Setting an Access Password (Security Lock)* on page 13 if security lock is enabled.

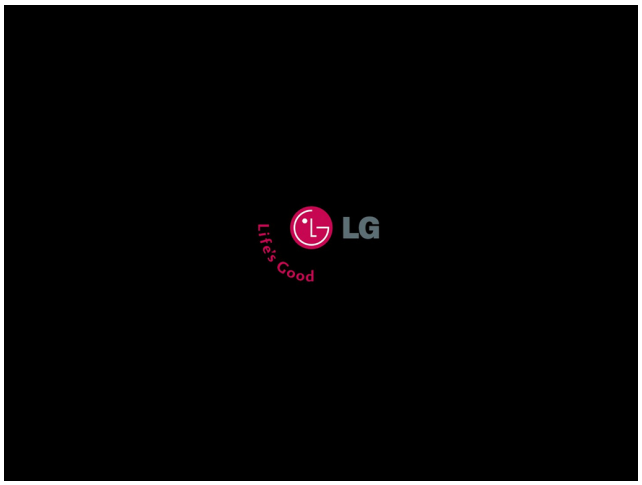

4. If more than one input device is connected, press the **SOURCE** button and use ▲▼ to scroll among devices. (Component is supported through the RGB to COMPONENT ADAPTER.)

- RGB: Analog RGB
  Component: DVD input YCbCr / YPbPr, or HDTV input YPbPr via HD15 connector
- Composite Video: Traditional composite video
- S-Video: Super video (Y/C separated)

5. When the "Power Off? /Press Power again" message appears, press the **POWER** button. The projector turns off.

Caution:

1. Be sure to remove the lens cap before starting projector.

2. Do not unplug the power cord until the READY LED stops flashing–indicating the projector has cooled down.

Setting an Access Password (Security Lock)

You can use the four (arrow) buttons to set a password and prevent unauthorized use of the projector. When enabled, the password must be entered after you power on the projector. (See *Navigating the OSD* on page 18 and *Setting the OSD Language* on page 19 for help on using OSD menus.)

> ***Important:***
> *Keep the password in a safe place. Without the password, you will not be able to use the projector. If you lose the password, contact your reseller for information on clearing the password.*

1. Press the **MENU** button to open the OSD menu.

2. Press the cursor ◄► button to move to the **Installation I** menu.

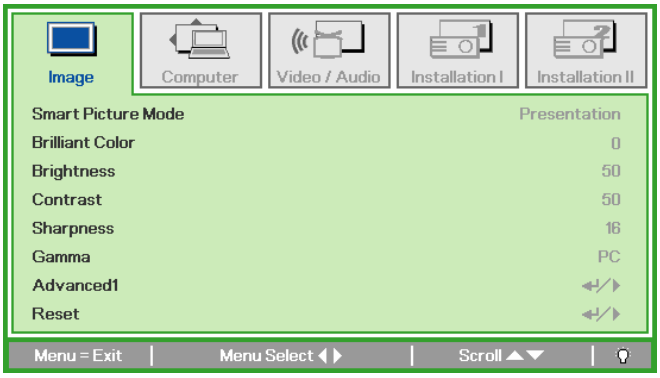

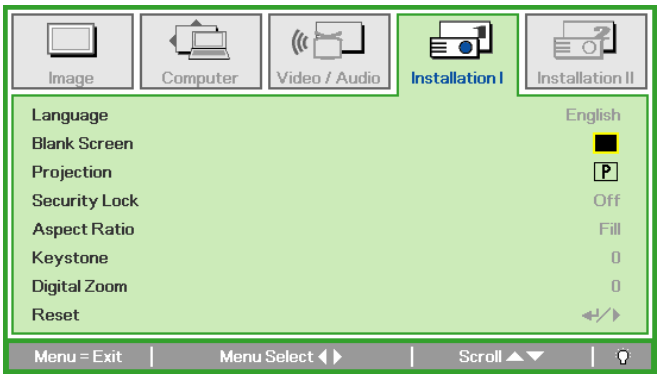

3. Press the cursor ▲▼ button to select **Security Lock**.

4. Press the cursor ◄► button to enable or disable security lock function.

A password dialog box automatically appears.

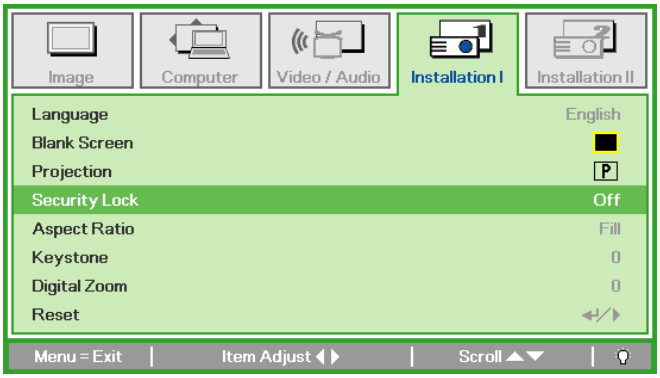

5. You can use the cursor buttons ▲▼◄► either on keypad or IR remote control for password entry. You can use any combination including the same arrow five times, but not less than five.

Press the cursor buttons in any order to set the password. Push the **MENU** button to exit the dialog box.

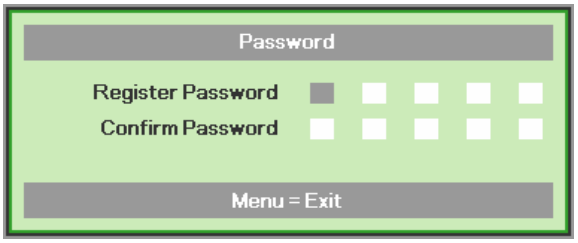

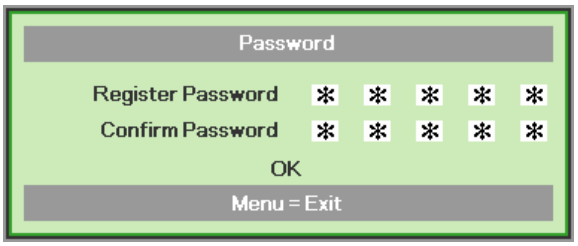

6. The password confirm menu appears when user presses the power-on key in case the **Security Lock** is enabled.
Enter the password in the order you set it at step 5. In case you forget the password, please contact the service center.
Service center will validate the owner and help reset the password.

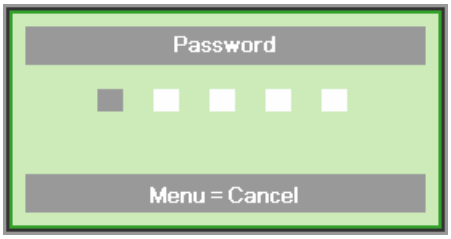

Adjusting the Projector Level

Take note of the following when setting up the projector:

- *The projector table or stand should be level and sturdy.*
- *Position the projector so that it is perpendicular to the screen.*
- *Ensure the cables are in a safe location. You could trip over them.*

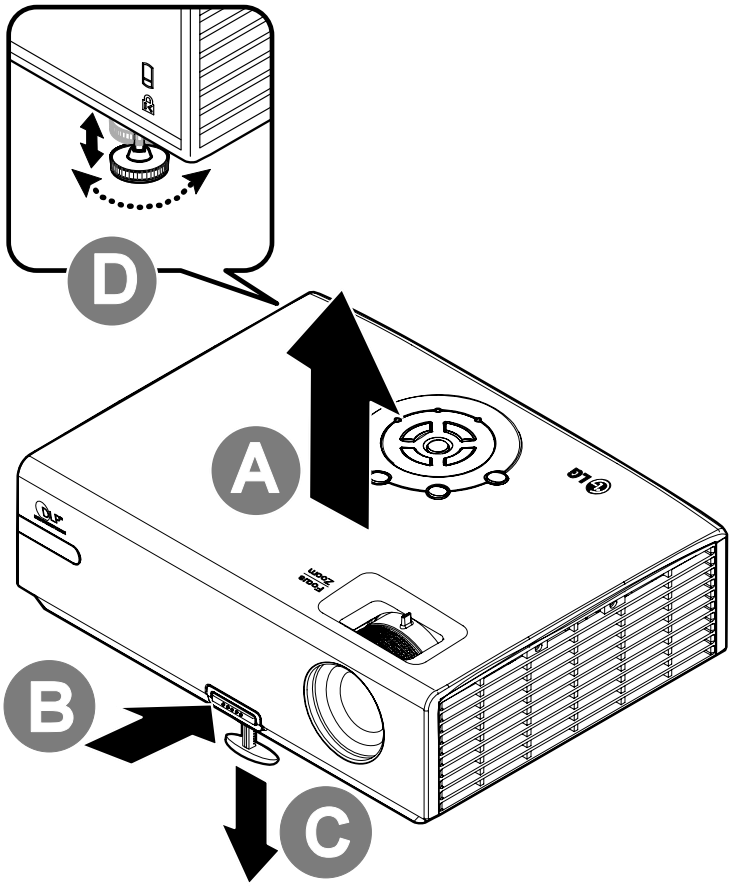

1. To raise the level of the projector, lift the projector **[A]** and press the height-adjuster button **[B]**.

The height adjuster drops down **[C]**.

2. To lower the level of the projector, press the height-adjuster button and push down on the top of the projector.

3. To adjust the angle of the picture, turn the tilt-adjuster **[D]** right or left until the desired angle has been achieved.

Adjusting the Zoom, Focus and Keystone

1. Use the **Image-zoom** control (on the projector only) to resize the projected image and screen size B.

2. Use the **Image-focus** control (on the projector only) to sharpen the projected image A.

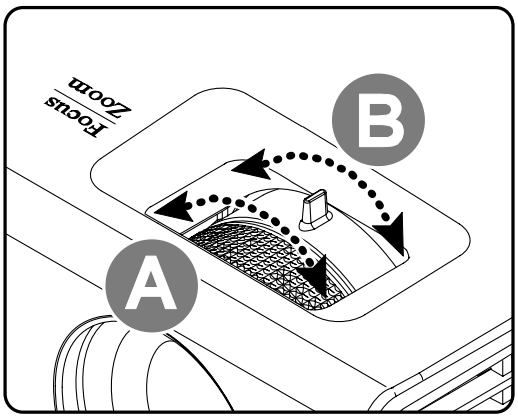

3. Use the **KEYSTONE** buttons (on the projector or the remote control) to correct image-trapezoid (wider top or bottom) effect.

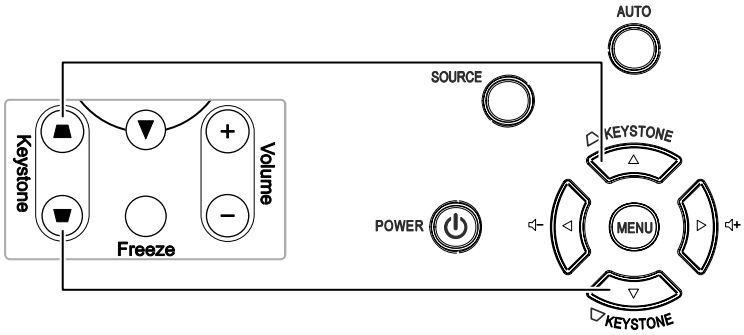

Remote control and OSD panel

4. The keystone control appears on the display.

Adjusting the Volume

1. Press the **Volume** +/- buttons on the remote control.
The volume control appears on the display.

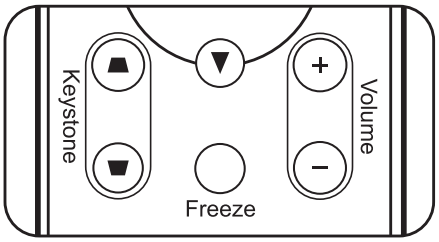

2. Press the **Left** or **Right Cursor** buttons on the keypad to adjust **Volume** +/-.

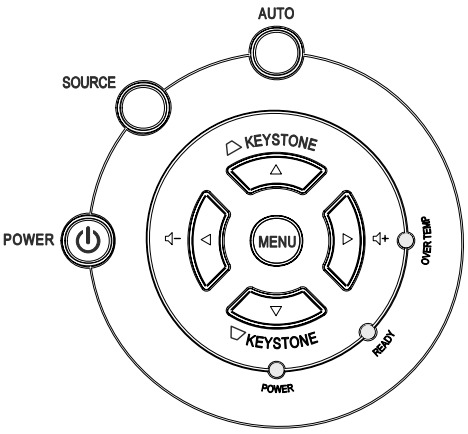

3. Press the **MUTE** button to turn off the volume (This feature is available only on the remote).

OSD Menu Controls

The projector has an OSD that lets you make image adjustments and change various settings.

Navigating the OSD

You can use the remote control cursor buttons or the buttons on the top of the projector to navigate and make changes to the OSD. The following illustration shows the corresponding buttons on the remote control and on the projector.

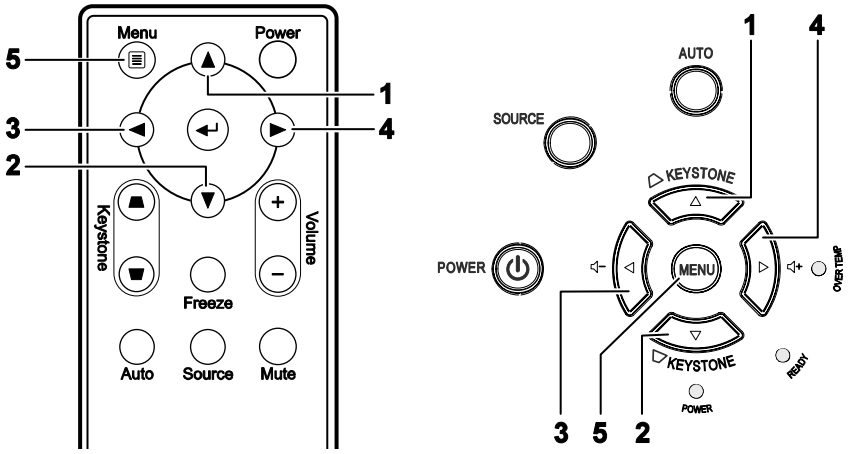

1. To enter the OSD, press the **MENU** button.
2. There are five menus. Press the cursor ◄► button to move through the menus.
3. Press the cursor ▲▼ button to move up and down in a menu.
4. Press ◄► to change values for settings.
5. Press **MENU** to close the OSD or leave a submenu.

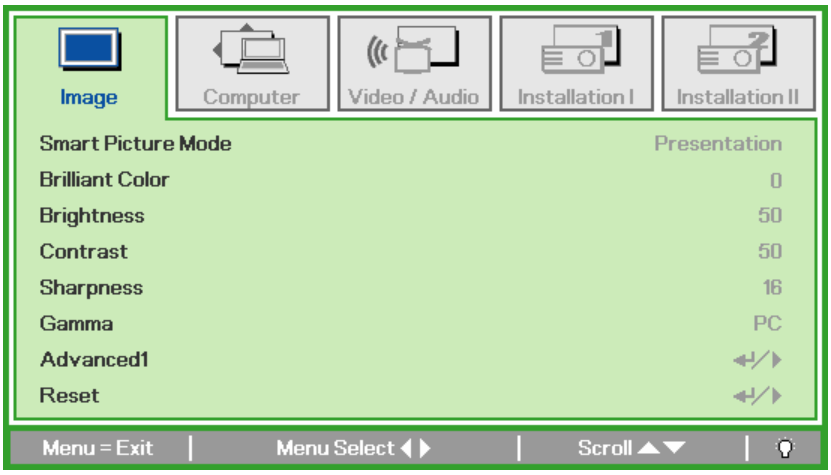

Note:
Depending on the video source, not all items in the OSD are available. For example, the ***Horizontal/Vertical Position*** *items in the Computer menu can only be modified when connected to a PC. Items that are not available cannot be accessed and are grayed out.*

Setting the OSD Language

Set the OSD language to your preference before continuing.

1. Press the **MENU** button. Press the cursor ◄► button to navigate to Installation I.

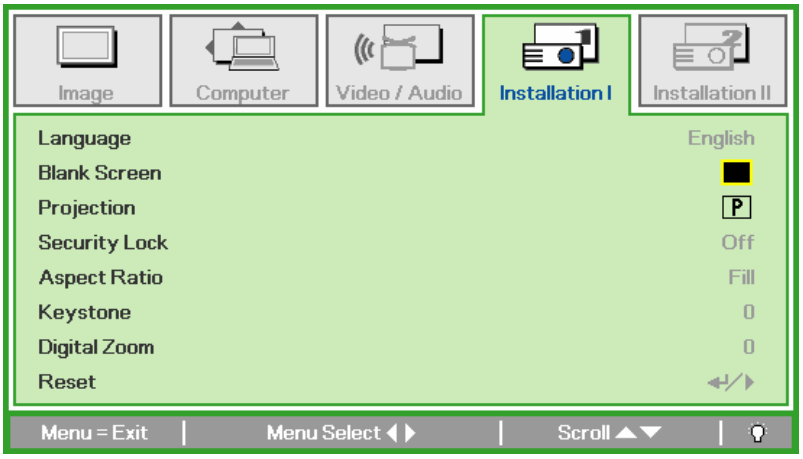

2. Press the cursor ▲▼ button until **Language** is highlighted.

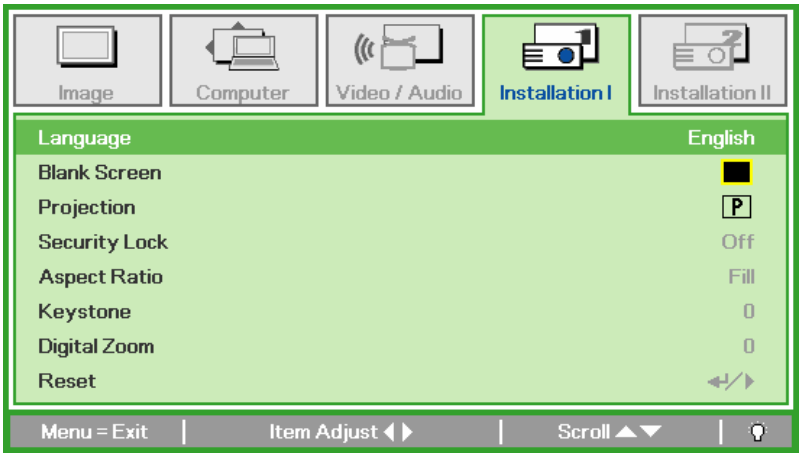

3. Press the cursor ◄► button until the language you want is highlighted.
4. Press the **MENU** button twice to close the OSD.

OSD Menu Overview

Use the following illustration to quickly find a setting or determine the range for a setting.

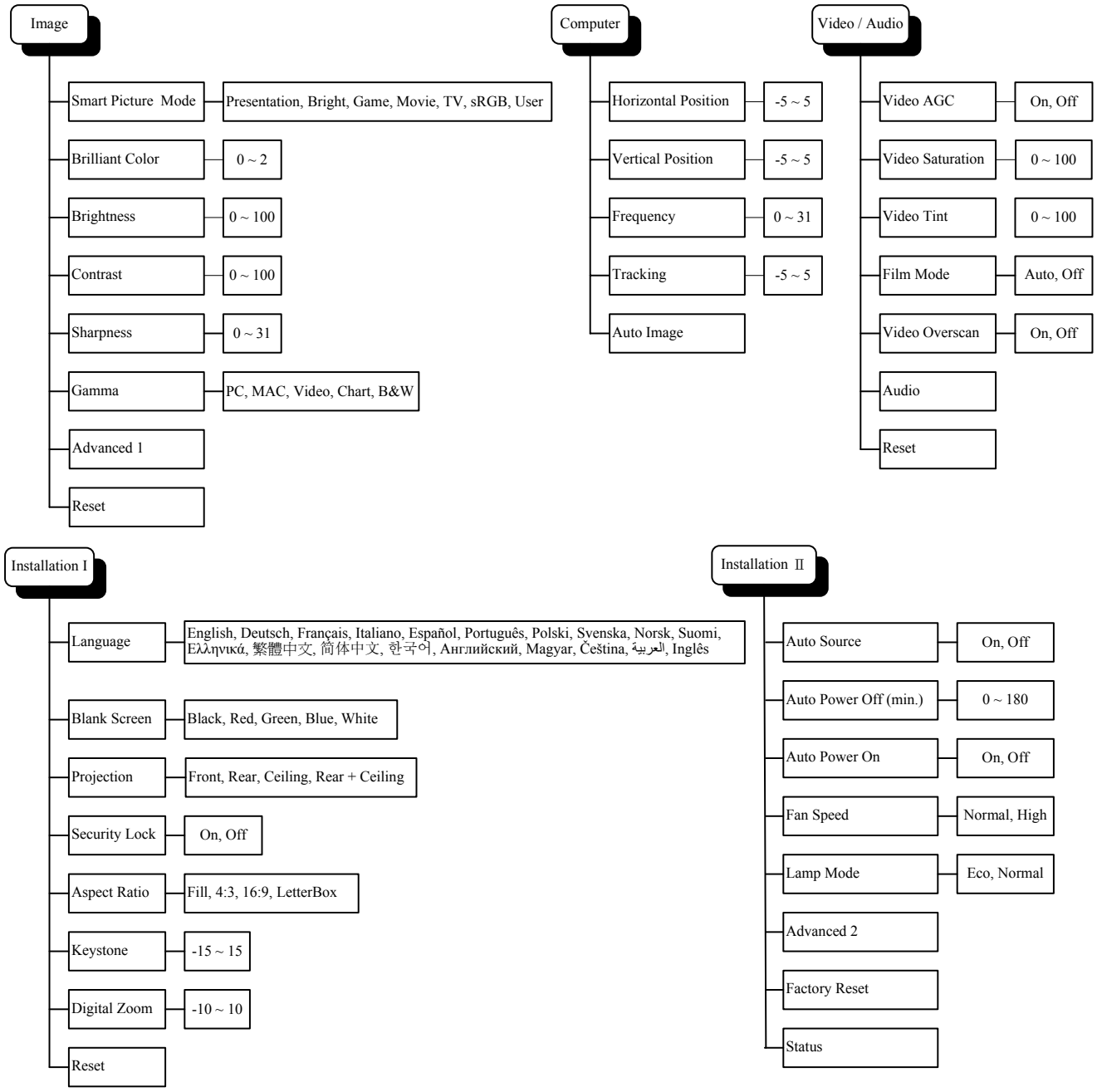

OSD Sub-Menu Overview

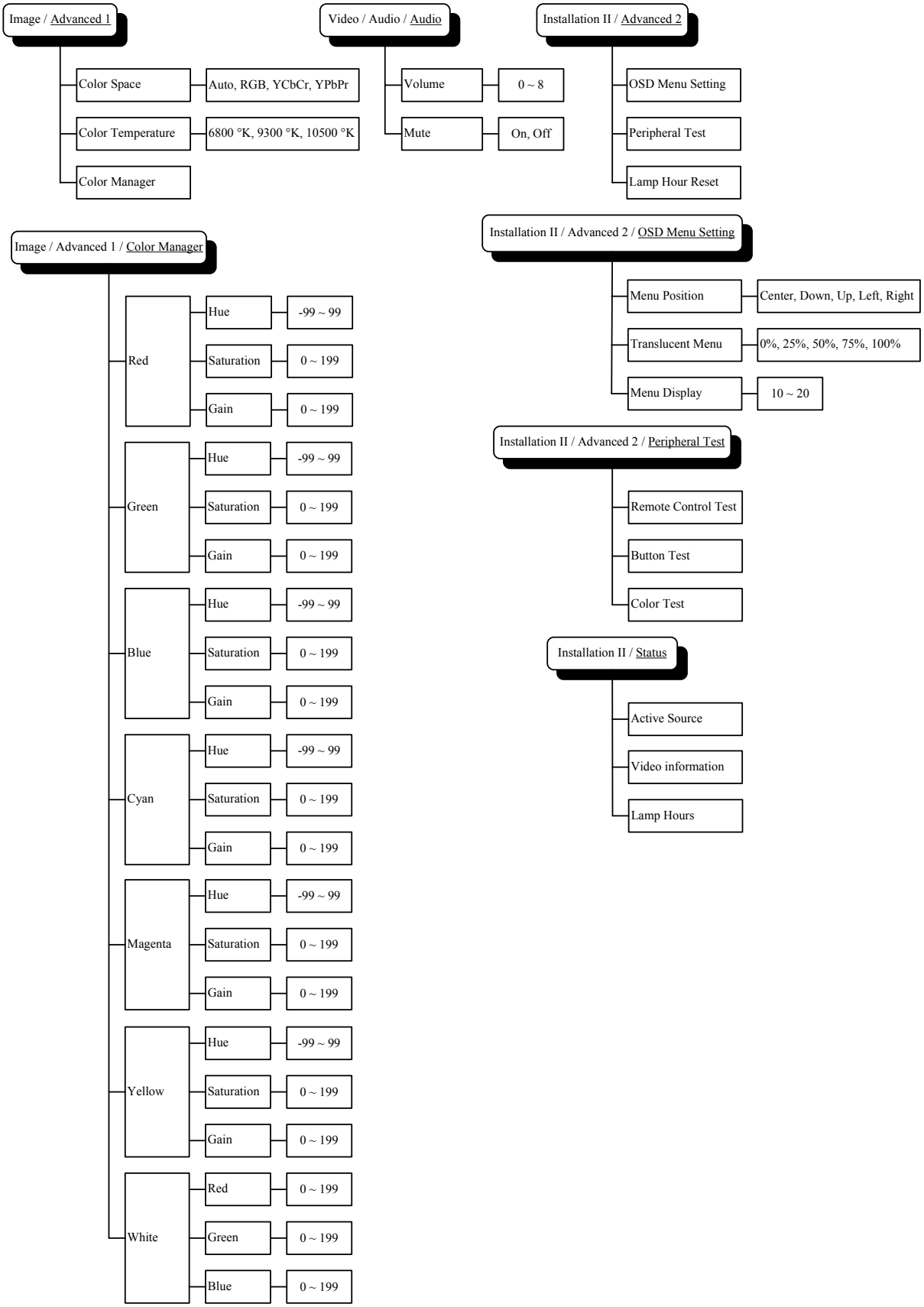

Image Menu

Press the **MENU** button to open the **OSD** menu. Press the cursor ◄► button to move to the **Image Menu**. Press the cursor ▲▼ button to move up and down in the **Image** menu. Press ◄► to change values for settings.

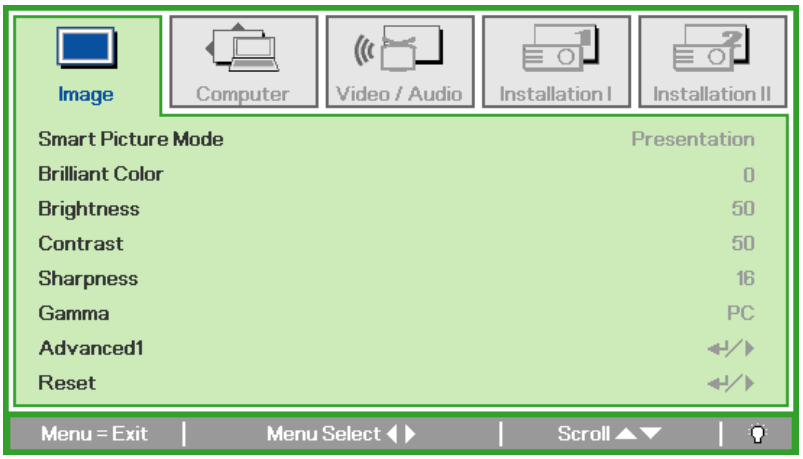

ITEM	DESCRIPTION
Smart Picture Mode	Press the cursor ◄► button to set the Smart Picture Mode.
Brilliant Color	Press the cursor ◄► button to adjust the Brilliant Color value.
Brightness	Press the cursor ◄► button to adjust the display brightness.
Contrast	Press the cursor ◄► button to adjust the display contrast.
Sharpness	Press the cursor ◄► button to adjust the display sharpness level.
Gamma	Press the cursor ◄► button to adjust the gamma correction of the display.
Advanced1	Press ↵ (Enter) / ► to enter the Advanced1 menu. See *Advanced1 Feature* on page 23.
Reset	Press ↵ (Enter) / ► to reset all settings to default values.

Advanced1 Feature

Press the **Menu** button to open the **OSD** menu. Press ◄► to move to the **Image** menu. Press ▼▲ to move to the **Advanced1** menu and then press **Enter** or ►. Press ▼▲ to move up and down in the Advanced1 menu.

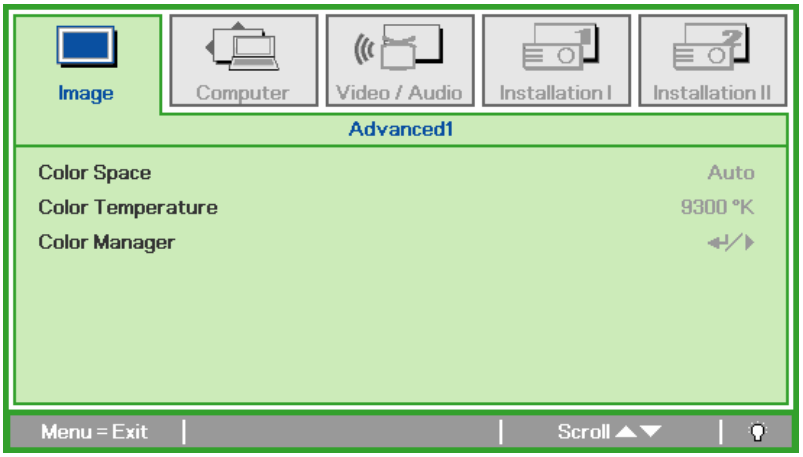

ITEM	DESCRIPTION
Color Space	Press the cursor ◄► button to adjust the color space. (Range: Auto – RGB – YPbPr- YCbCr)
Color Temperature	Press the cursor ◄► button to adjust the color temperature. (Range: 6800 °K ~ 10500 °K)
Color Manager	Press ↵ (Enter) / ► to enter the color manager menu. (Range: Red-Green-Blue-Cyan-Magenta-Yellow-White). See page 24 for more information on Color Manager.

Color Manager

Press ↵ (Enter) / ► to enter the **Color Manager** sub menu.

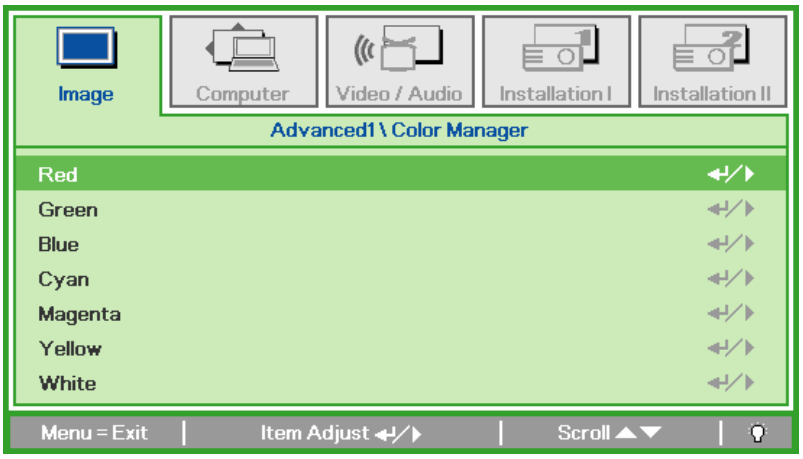

ITEM	DESCRIPTION
Red	Select to enter the Red Color Manager. Press the ◄► buttons to adjust the Hue, Saturation, and Gain.
Green	Select to enter the Green Color Manager. Press the ◄► buttons to adjust the Hue, Saturation, and Gain.
Blue	Select to enter the Blue Color Manager. Press the ◄► buttons to adjust the Hue, Saturation, and Gain.
Cyan	Select to enter the Cyan Color Manager. Press the ◄► buttons to adjust the Hue, Saturation, and Gain.
Magenta	Select to enter the Magenta Color Manager. Press the ◄► buttons to adjust the Hue, Saturation, and Gain.
Yellow	Select to enter the Yellow Color Manager. Press the◄► buttons to adjust the Hue, Saturation, and Gain.
White	Select to enter the White Color Manager. Press the ◄► buttons to adjust the Red, Green, and Blue.

Computer Menu

Press the **MENU** button to open the **OSD** menu. Press the cursor ◄► button to move to the **Computer** menu. Press the cursor ▲▼ button to move up and down in the computer menu. Press ◄► to change values for settings.

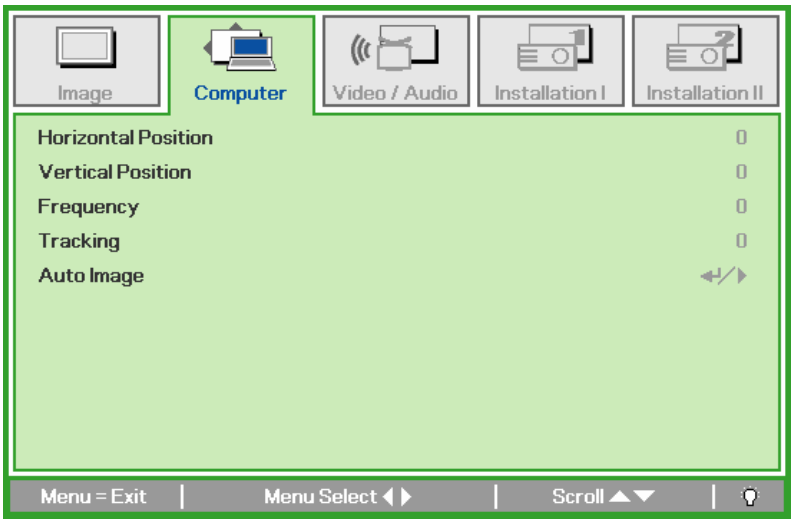

ITEM	DESCRIPTION
Horizontal Position	Press the cursor ◄► button to adjust the display position to left or right.
Vertical Position	Press the cursor ◄► button to adjust the display position to up or down.
Frequency	Press the cursor ◄► button to adjust the A/D sampling clock.
Tracking	Press the cursor ◄► button to adjust the A/D sampling dot.
Auto Image	Press ↵ (Enter) / ► to automatically adjustment for phase, tracking, size and position.

Video/Audio Menu

Press the **MENU** button to open the **OSD** menu. Press the cursor ◄► button to move to the **Video/Audio** menu. Press the cursor ▲▼ button to move up and down in the **Video/Audio** menu. Press ◄► to change values for settings.

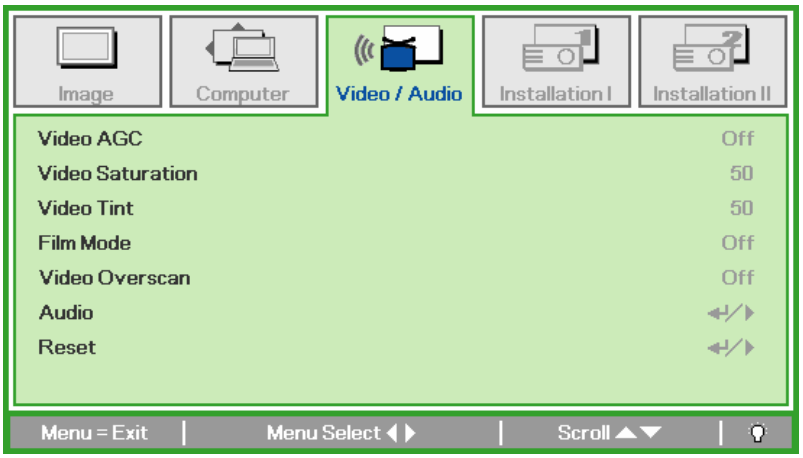

ITEM	DESCRIPTION
Video AGC	Press the ◄► buttons to enable or disable the Automatic Gain Control for video source.
Video Saturation	Press the ◄► buttons to adjust the video saturation.
Video Tint	Press the ◄► buttons to adjust the video tint/hue.
Film Mode	Press the ◄► buttons to select a different film mode.
Video Overscan	Press the ◄► buttons to enable or disable video over scan.
Audio	Press ↵ (Enter) / ► to enter the Audio menu. See *Audio* on page 27.
Reset	Press ↵ (Enter) / ► to reset all settings to default values.

Note:
Video jagging may occur when playing interlace video. To overcome this issue, open the Video / Audio menu and adjust the Film Mode feature.

Audio

Press ↵ (Enter) / ► to enter the **Audio** sub menu.

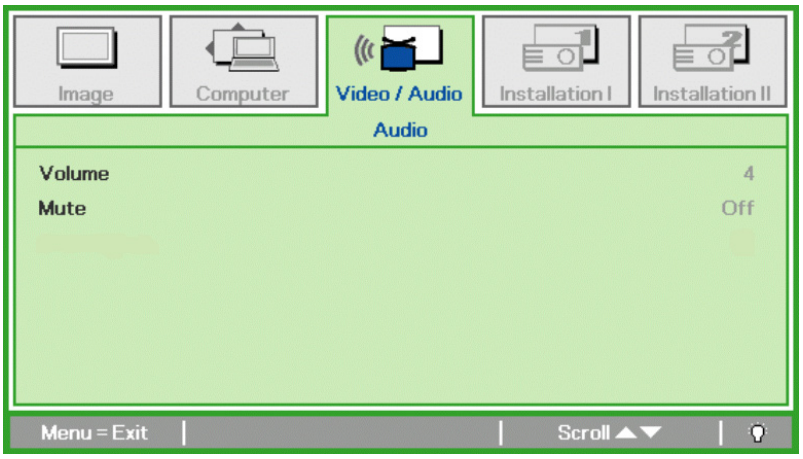

ITEM	DESCRIPTION
Volume	Press the ◄► buttons to adjust the audio volume. (Range: 0~8)
Mute	Press the ◄► buttons to turn on or off the speaker.

Installation I Menu

Press the **MENU** button to open the **OSD** menu. Press the cursor ◄► button to move to the **Installation I** menu. Press the cursor ▲▼ button to move up and down in the **Installation I** menu. Press ◄► to change values for settings.

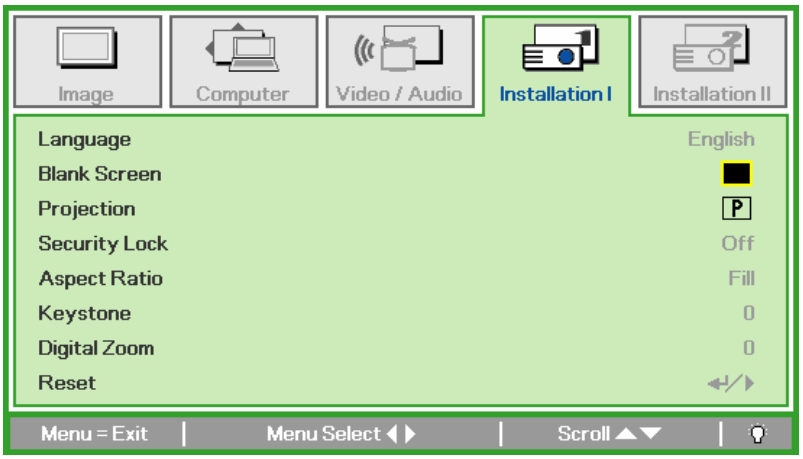

ITEM	DESCRIPTION
Language	Press the cursor ◄► button to select a different localization Menu.
Blank Screen	Press the cursor ◄► button to select different color to blank the screen.
Projection	Press the cursor ◄► button to choose from four projection methods:
Security Lock	Press the cursor ◄► button to enable or disable security lock function.
Aspect Ratio	Press the cursor ◄► button to adjust the video aspect ratio.
Keystone	Press the cursor ◄► button to adjust the display keystone.
Digital Zoom	Press the cursor ◄► button to adjust the Digital Zoom menu. (Range: -10 ~ +10)
Reset	Press ↵ (Enter) / ► to reset all settings to default values.

Installation II Menu

Press the **MENU** button to open the **OSD** menu. Press the cursor ◄► button to move to the **Installation II** menu. Press the cursor ▲▼ button to move up and down in the Installation II menu.

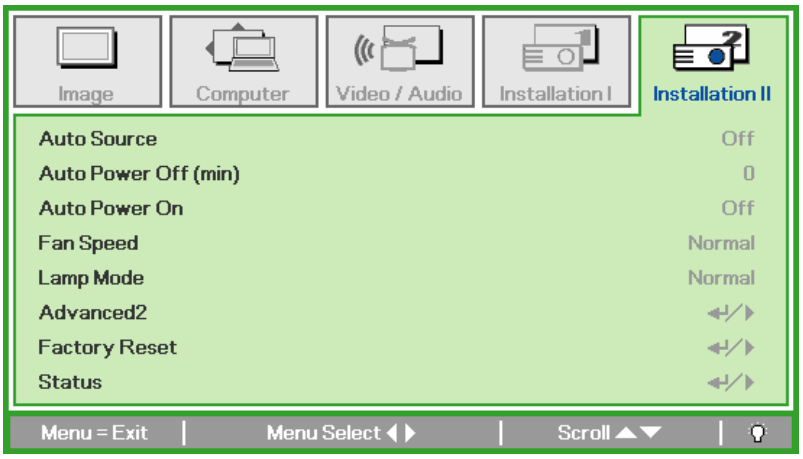

ITEM	DESCRIPTION
Auto Source	Press the cursor ◄► button to enable or disable automatic source detection. (Range: On ~ Off)
Auto Power Off (min.)	Press the cursor ◄► button to enable or disable automatic shutdown of lamp when no signal.
Auto Power On	Press the cursor ◄► button to enable or disable automatic power On when AC power is supplied.
Fan Speed	Press the cursor ◄► button to toggle between Normal and High fan speeds. **Note**: We recommend selecting high speed in high temperatures, high humidity, or high altitude areas.
Lamp Mode	Press the cursor ◄► button to select the lamp mode for higher brightness or lower brightness to save lamp life.
Advanced2	Press ↵ (Enter) / ► to enter the Advanced menu. See *Advanced2 Feature* on page 30.
Factory Reset	Press ↵ (Enter) / ► to reset all items to factory preset values.
Status	Press ↵ (Enter) / ► to enter the Status menu. See page 33 for more information on Status.

Advanced2 Feature

Press the **Menu** button to open the **OSD** menu. Press ◄► to move to the **Installation II** menu. Press ▲▼ to move to the **Advanced2** menu and then press **Enter** or ►. Press ▲▼ to move up and down in the **Advanced2** menu. Press ◄► to change values for setting.

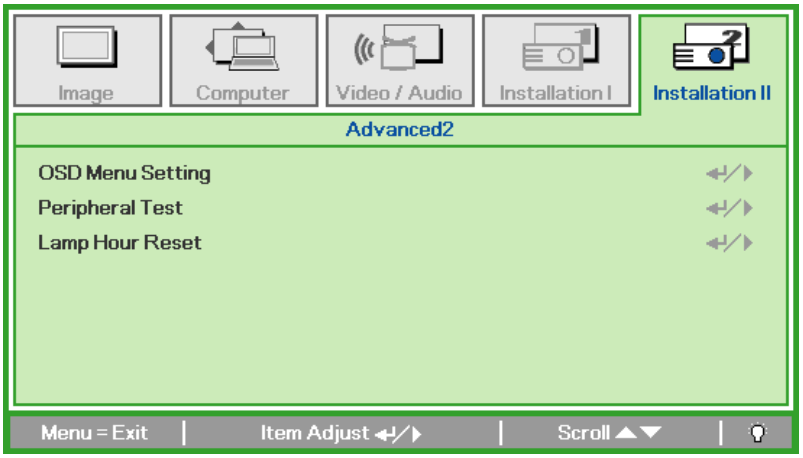

ITEM	DESCRIPTION
OSD Menu Setting	Press Enter / ► to enter the OSD setting menu. See page 31 for more information on OSD Menu Setting.
Peripheral Test	Press Enter/ ► to enter the Peripheral Test menu. See page 31 for more information on Peripheral Test.
Lamp Hour Reset	After replacing the lamp, this item should be reset. See page 32 for more information on Lamp Hour Reset.

OSD Menu Setting

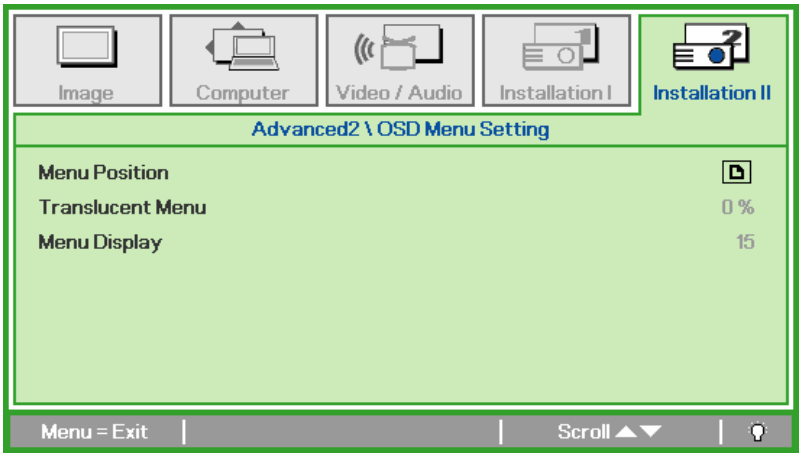

ITEM	DESCRIPTION
Menu Position	Press ◄► button to select different OSD location.
Translucent Menu	Press ◄► button to select OSD background translucent level.
Menu Display	Press ◄► button to select OSD timeout delay.

Peripheral Test

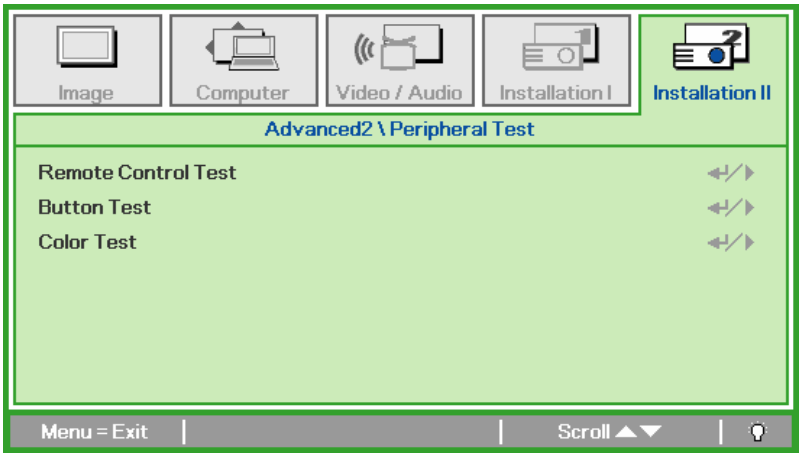

ITEM	DESCRIPTION
Remote Control Test	Press ↵ (Enter) / ► to test the IR remote controller for diagnostic.
Button Test	Press ↵ (Enter) / ► to test the button on keypad.
Color Test	Press ↵ (Enter) / ► to select different colors on screen.

Lamp Hour Reset

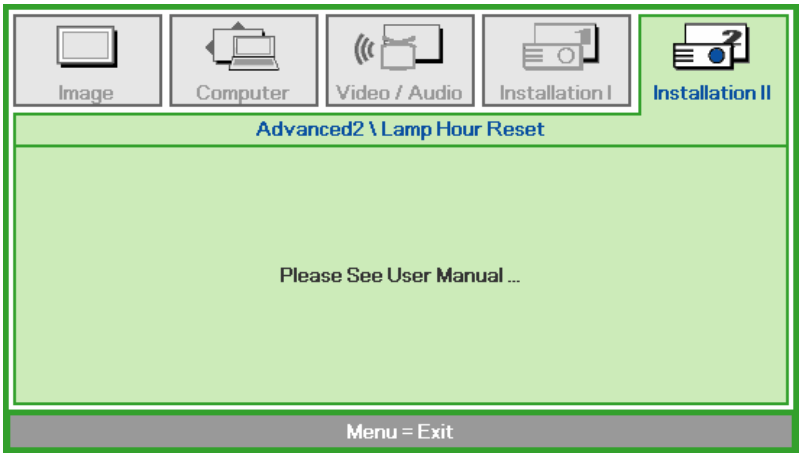

Please refer to *Resetting the Lamp* on page 36 to reset the lamp hour counter.

Factory Reset

Press the cursor ▲▼ button to move up and down in the **Installation II** menu. Select the **Factory Reset** sub menu and press ↵ (Enter) / ► to reset all the menu items to the factory default values.

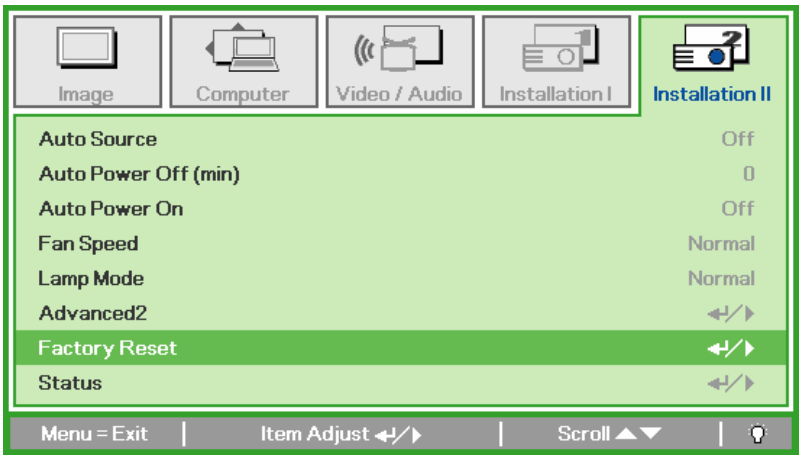

Status

Press the cursor ▲▼ button to move up and down in the **Installation II** menu. Select the **Installation II** sub menu and press ↵ (Enter) / ► to enter the **Status** sub menu.

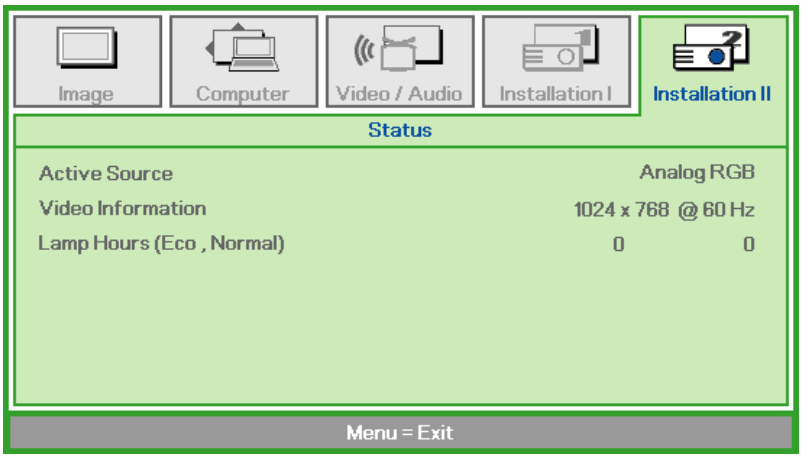

ITEM	DESCRIPTION
Active Source	Display the activated source.
Video Information	Displays resolution/video information for RGB source and color standard for Video source.
Lamp Hours	Lamp hour used information is displayed. Eco and Normal counters are separated.

Replacing the Projection Lamp

The projection lamp should be replaced when it burns out. It should only be replaced with a certified replacement part, which you can order from your local dealer.

Important:
a. *The fluorescent lamp used in this product contains a small amount of mercury*

b. *Do not dispose this product with general household waste.*

c. *Disposal of this product must be carried out in accordance with the regulations of your local authority.*

Warning:
Be sure to turn off and unplug the projector at least 30 minutes before replacing the lamp. Failure to do so could result in a severe burn.

1. Loosen the two captive screws on the lamp compartment cover.

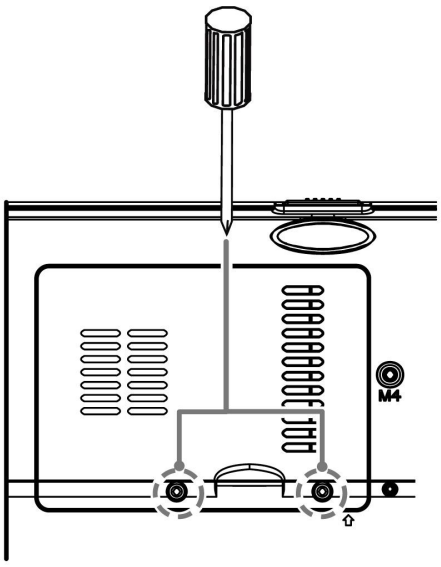

2. Remove the lamp compartment cover.

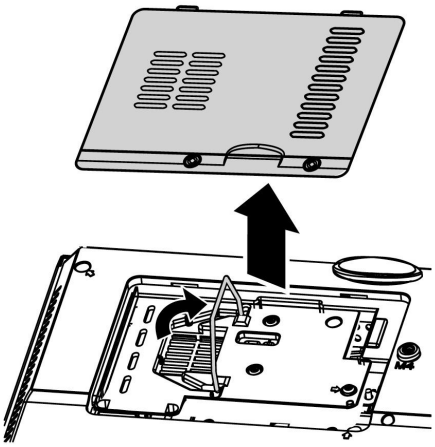

3. Remove the two screws from the lamp module.

4. Lift the module handle up.

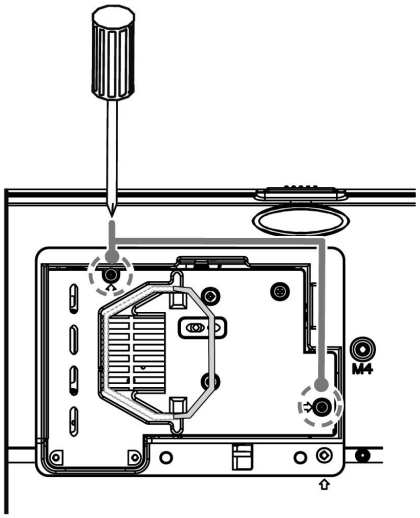

5. Pull firmly on the module handle to remove the lamp module.

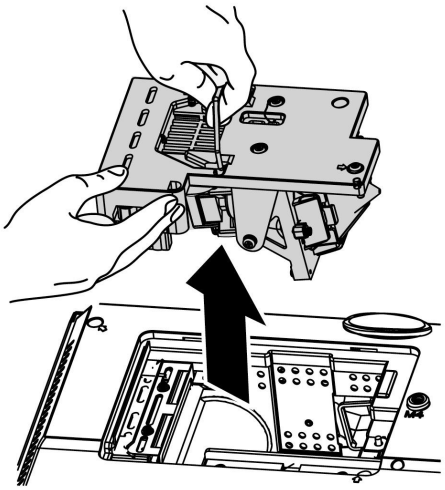

6. Reverse steps 1 to 5 to install the new lamp module. While installing, align the lamp module with the connector and ensure it is level to avoid damage.

Note: The lamp module must sit securely in place and the lamp connector must be connected properly before tightening the screws.

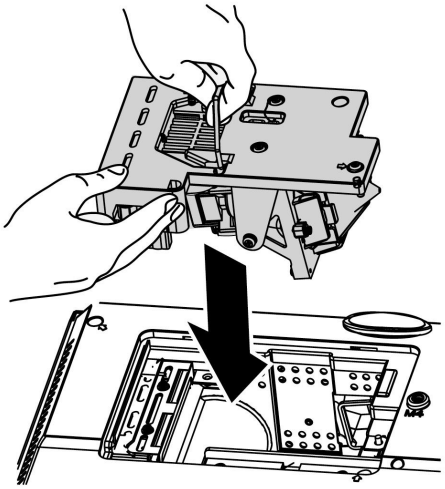

Resetting the Lamp

After replacing the lamp, you should reset the lamp hour counter to zero. Refer to the following:

1. Press the **MENU** button to open the OSD menu.

2. Press the cursor ◄► button to move to the **Installation II** menu. Press the cursor button to move down to **Advanced2**.

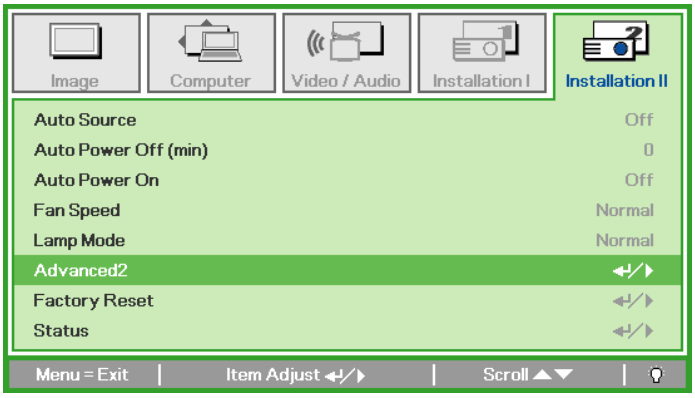

3. Press the cursor ▼▲ button to move down to **Lamp Hour Reset**.

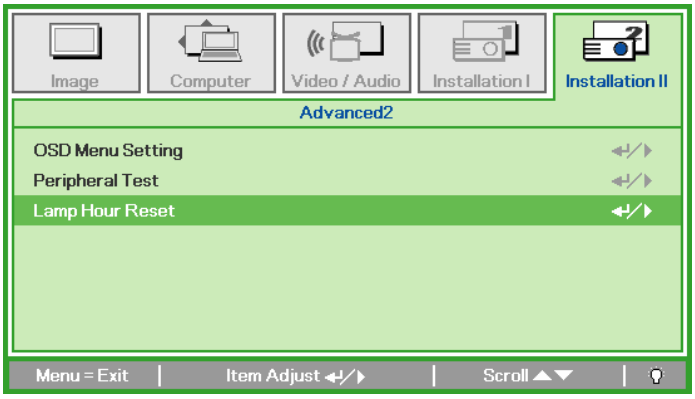

4. Press the cursor ► or Enter button.

A message screen appears.

5. Press ▼▲◄► buttons to reset the lamp hour.

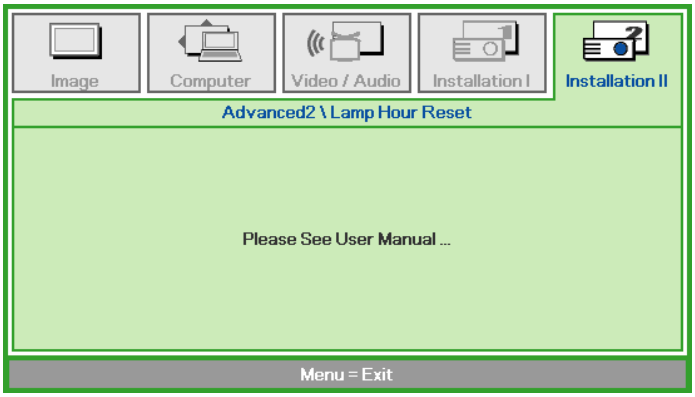

6. Press the **MENU** button to get back to Installation II.

Cleaning the Projector

Cleaning the projector to remove dust and grime will help ensure trouble-free operation.

Warning:
1. *Be sure to turn off and unplug the projector at least 30 minutes before cleaning. Failure to do so could result in a severe burn.*

2. *Use only a dampened cloth when cleaning. Do not allow water to enter the ventilation openings on the projector.*

3. *If a little water gets into the projector interior while cleaning, leave unplugged in a well-ventilated room for several hours before using.*

4. *If a lot of water gets into the projector interior when cleaning, have the projector serviced.*

Cleaning the Lens

You can purchase optic lens cleaner from most camera stores. Refer to the following to clean the projector lens.

1. Apply a little optic lens cleaner to a clean soft cloth. (Do not apply the cleaner directly to the lens.)
2. Lightly wipe the lens in a circular motion.

Caution:
1. *Do not use abrasive cleaners or solvents.*

2. *To prevent discoloration or fading, avoid getting cleaner on the projector case.*

Cleaning the Case

Refer to the following to clean the projector case.

1. Wipe off dust with a clean dampened cloth.
2. Moisten the cloth with warm water and mild detergent (such as used to wash dishes), and then wipe the case.
3. Rinse all detergent from the cloth and wipe the projector again.

Caution:
To prevent discoloration or fading of the case, do not use abrasive alcohol-based cleaners.

Using the Kensington® Lock

If you are concerned about security, attach the projector to a permanent object with the Kensington slot and a security cable.

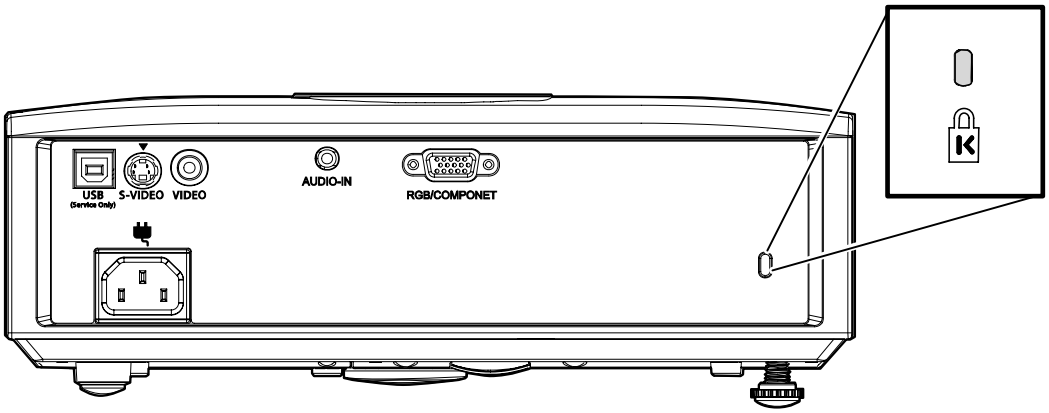

Note:
Contact your vendor for details on purchasing a suitable Kensington security cable.

The security lock corresponds to Kensington's MicroSaver Security System. If you have any comment, contact: Kensington, 2853 Campus Drive, San Mateo, CA 94403, U.S.A. Tel: 800-535-4242, *http://www.Kensington.com*.

Common problems and solutions

These guidelines provide tips to deal with problems you may encounter while using the projector. If the problem remains unsolved, contact your dealer for assistance.

Often after time spent troubleshooting, the problem is traced to something as simple as a loose connection. Check the following before proceeding to the problem-specific solutions.

- *Use some other electrical device to confirm that the electrical outlet is working.*
- *Ensure the projector is turned on.*
- *Ensure all connections are securely attached.*
- *Ensure the attached device is turned on.*
- *Ensure a connected PC is not in suspending mode.*
- *Ensure a connected notebook computer is configured for an external display.*
  (This is usually done by pressing an Fn-key combination on the notebook.)

Tips for Troubleshooting

In each problem-specific section, try the steps in the order suggested. This may help you to solve the problem more quickly.

Try to pin point the problem and thus avoid replacing non-defective parts.
For example, if you replace batteries and the problem remains, put the original batteries back and go to the next step.

Keep a record of the steps you take when troubleshooting: The information may be useful when calling for technical support or for passing on to service personnel.

LED Error Messages

Error Code Messages	Power LED Blink	Over Temp LED	Ready LED Blink
Over temperature	0	ON	0
Thermal break status error	4	0	0
Lamp error	5	0	0
Fan1 error	6	0	1
Fan2 error	6	0	2
Fan3 error	6	0	3
Lamp door open	7	0	0
DMD error	8	0	0
Color wheel error	9	0	0

In the event of an error, please disconnect the AC power cord and wait for one (1) minute before re-starting the projector. If the Power or Ready LEDs are still blinking or the Over Temp LED is lit, contact your service center.

Image Problems

Problem: No image appears on the screen

1. Verify the settings on your notebook or desktop PC.
2. Turn off all equipment and power up again in the correct order.

Problem: The image is blurred

1. Adjust the **Focus** on the projector.
2. Press the **Auto** button on the remote control or projector.
3. Ensure the projector-to-screen distance is within the 10-meter (33-feet) specified range.
4. Check that the projector lens is clean.

Problem: The image is wider at the top or bottom (trapezoid effect)

1. Position the projector so it is as perpendicular to the screen as possible.
2. Use the Keystone button on the remote control or projector to correct the problem.

Problem: The image is reversed

Check the **Projection** setting on the **Installation I** menu of the OSD.

Problem: The image is streaked

1. Set the **Frequency** and **Tracking** settings on the **Computer** menu of the OSD to the default settings.
2. To ensure the problem is not caused by a connected PC's video card, connect to another computer.

Problem: The image is flat with no contrast

Adjust the **Contrast** setting on the **Image** menu of the OSD.

Problem: The color of the projected image does not match the source image.

Adjust the **Color Temperature** and **Gamma** settings on the **Image** menu of the OSD.

Lamp Problems

Problem: There is no light from the projector

1. Check that the power cable is securely connected.
2. Ensure the power source is good by testing with another electrical device.
3. Restart the projector in the correct order and check that the Power LED is green.
4. If you have replaced the lamp recently, try resetting the lamp connections.
5. Replace the lamp module.
6. Put the old lamp back in the projector and have the projector serviced.

Problem: The lamp goes off

1. Power surges can cause the lamp to turn off. Re-plug power cord. When the Ready LED is on, press the power button.
2. Replace the lamp module.
3. Put the old lamp back in the projector and have the projector serviced.

Remote Control Problems

Problem: The projector does not respond to the remote control

1. Direct the remote control towards remote sensor on the projector.
2. Ensure the path between remote and sensor is not obstructed.
3. Turn off any fluorescent lights in the room.
4. Check the battery polarity.
5. Replace the batteries.
6. Turn off other Infrared-enabled devices in the vicinity.
7. Have the remote control serviced.

Audio Problems

Problem: There is no sound

1. Adjust the volume on the remote control.
2. Adjust the volume of the audio source.
3. Check the audio cable connection.
4. Test the source audio output with other speakers.
5. Have the projector serviced.

Problem: The sound is distorted

1. Check the audio cable connection.
2. Test the source audio output with other speakers.
3. Have the projector serviced.

Having the Projector Serviced

If you are unable to solve the problem, you should have the projector serviced. Pack the projector in the original carton. Include a description of the problem and a checklist of the steps you took when trying to fix the problem: The information may be useful to service personnel. For servicing, return the projector to the place you purchased it.

Specifications

Model	DS420	DX420
Display type	TI DMD 0.55-inch SVGA	TI DMD 0.55-inch XGA
Resolution	SVGA 800x600 Native	XGA 1024x768 Native
Projection distance	1.5 meters ~ 10 meters	1 meter ~ 10 meters
Projection screen size	36 to 246 inches	23 to 255 inches
Projection lens	Manual focus	Manual Focus/Manual Zoom
Zoom ratio	N/A	1.1
Vertical keystone correction	+/- 15 degrees	
Projection methods	Front, Rear, Desktop/Ceiling (Rear, Front)	
Data compatibility	IBM PC or compatibles (VGA, SVGA, XGA, SXGA, UXGA), Mac	
SDTV/EDTV/ HDTV	480i, 576i, 480p, 576p, 720p, 1080i	
Video compatibility	NTSC/NTSC 4.43, PAL (B/G/H/I/M/N/60), SECAM	
H-Sync	15, 30 – 80 kHz	
V-Sync	43 – 87 Hz	
Safety certification	FCC-B, UL, cUL, TUV, CB, CE, PCT, SASO and CCC	
Operation temperature	5° ~ 35°C	
Dimensions	280 mm (W) x 88 mm (H) x 205 mm (D)	
AC Input	AC Universal 100 ~ 240, Typical @ 110VAC (100~240)/+-10%	
Power consumption	Typical 230W (Normal mode); Typical 200W (Eco mode)	
Stand By	<5 watts	
Lamp	Normal Mode: 180W; Eco Mode: 150W	
Audio speaker	1W mono speaker	
PC	RGB	
Video	Composite video (RCA X 1)	
	S-Video (Mini-DIN)	
Audio	Mini-jack	
Security	Kensington lock	

Input Connectors

PC	VGA
	USB (Service only)
Video	Composite video (RCAx1)
	S-Video (Mini-DIN)
Audio	Mini-jack
Security	Kensington slot

Projection Distance vs. Projection Size

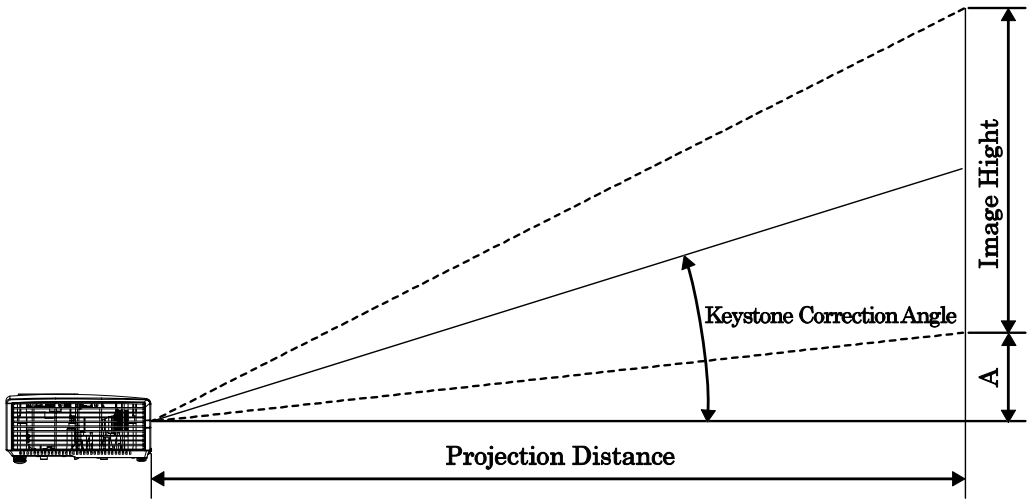

DS420 Projection Distance and Size Table

DS-420	TR 2 FIX ZOOM			
Distance (m)	1.22	3.25	4.06	10.00
Diagonal (inches)	30	80	100	246
Keystone (degree)	13.50	13.50	13.50	13.50
Image Height (mm)	457.2	1219.2	1524	3749.04
Image Width (mm)	609.6	1625.6	2032	4998.72
A (mm)	64.01	170.69	213.36	524.87

DX420 Projection Distance and Size Table

DX-420	TELE				WIDE			
Distance (m)	1.32	3.51	4.39	8.78	1.57	3.14	3.92	10.00
Diagonal (inches)	30	80	100	200	40	80	100	255
Keystone (degree)	12.53	12.53	12.53	12.53	13.97	13.97	13.97	13.97
Image Height (mm)	457.2	1219.2	1524	3048	609.6	1219.2	1524	3886.2
Image Width (mm)	609.6	1625.6	2032	4064	812.8	1625.6	2032	5181.6
A (mm)	64.01	170.69	213.36	426.72	85.34	170.69	213.36	544.07

DS420 Timing Mode Table

The projector can display several resolutions. The following table outlines the resolutions that can be displayed by the projector.

SIGNAL	RESOLUTION	H-SYNC (KHZ)	V-SYNC (HZ)	COMPOSITE / S-VIDEO	COMPONENT	RGB
NTSC	—	15.734	60.0	O	—	—
PAL/SECAM	—	15.625	50.0	O	—	—
VESA	640 x 350*	37.9	85.0	—	—	O
	640 x 400*	37.9	85.0	—	—	O
	720 x 400*	37.9	85.0	—	—	O
	640 x 480	31.5	60.0	—	—	O
	640 x 480	37.9	72.0	—	—	O
	640 x 480	37.5	75.0	—	—	O
	640 x 480	43.3	85.0	—	—	O
	800 x 600	35.2	56.0	—	—	O
	800 x 600	37.9	60.0	—	—	O
	800 x 600	48.1	72.0	—	—	O
	800 x 600	46.9	75.0	—	—	O
	800 x 600	53.7	85.0	—	—	O
	1024 x 768	48.4	60.0	—	—	O
	1024 x 768	56.5	70.0	—	—	O
	1024 x 768	60.0	75.0	—	—	O
	1024 x 768	68.7	85.0	—	—	O
	1440 x 900	55.6	60.0	—	—	O
	1280 x 1024	63.98	60.0	—	—	O
	1280 x 1024	79.98	75.0	—	—	O
	1400 x 1050	65.3	60.0	—	—	O
	640 x 480	35.0	66.68	—	—	O
	832 x 624	49.725	74.55	—	—	O
	1024 x 768	60.24	75.0	—	—	O
	1152 x 870	68.68	75.06	—	—	O
SDTV	480i	15.734	60	—	O	—
	576i	15.625	50	—	O	—
EDTV	480p	31.469	60	—	O	—
	576p	31.25	50	—	O	—

SIGNAL	RESOLUTION	H-SYNC (KHZ)	V-SYNC (HZ)	COMPOSITE / S-VIDEO	COMPONENT	RGB
HDTV	720p	37.5	50	—	O	—
	720p	45.0	60	—	O	—
	1080i	33.8	60	—	O	—
	1080i	28.1	50	—	O	—

O: Frequency supported

—: Frequency not supported

* : Displayable level

The resolution of the panel for the DS420 is 800 x 600. Resolution other than native resolution may display with uneven size of text or lines.

HDTV timing: DVD player (main source), VG828 (secondary source).

DX420 Timing Mode Table

SIGNAL	RESOLUTION	H-SYNC (KHZ)	V-SYNC (HZ)	COMPOSITE / S-VIDEO	COMPONENT	RGB
NTSC 4.43	–	15.734	60.0	O	–	–
PAL B/G/H/I/M/N/60/ SECAM	–	15.625	50.0	O	–	–
VESA	640 x 350*	31.5	70.0	–	–	O
	640 x 350*	37.9	85.0	–	–	O
	640 x 400*	37.9	85.0	–	–	O
	640 x 480	31.5	60.0	–	–	O
	640 x 480	37.9	72.0	–	–	O
	640 x 480	37.5	75.0	–	–	O
	640 x 480	43.3	85.0	–	–	O
	800 x 600	35.2	56.0	–	–	O
	800 x 600	37.9	60.0	–	–	O
	800 x 600	48.1	72.0	–	–	O
	800 x 600	46.9	75.0	–	–	O
	800 x 600	53.7	85.0	–	–	O
	1024 x 768	48.4	60.0	–	–	O
	1024 x 768	56.5	70.0	–	–	O

SIGNAL	RESOLUTION	H-SYNC (KHZ)	V-SYNC (HZ)	COMPOSITE / S-VIDEO	COMPONENT	RGB
VESA	1024 x 768	60.0	75.0	—	—	O
	1024 x 768	68.7	85.0	—	—	O
	1440 x 900	55.6	60.0	—	—	O
	1280 x 1024	63.98	60.0	—	—	O
	1280 x 1024	79.98	75.0	—	—	O
	1400 x 1050	65.3	60.0	—	—	O
	1400 x 1050	64.7	60.0	—	—	O
Apple Mac	640 x 480	34.98	66.66	—	—	O
	640 x 480	35.0	66.68	—	—	O
	832 x 624	49.725	74.55	—	—	O
	1024 x 768	60.24	75.0	—	—	O
	1152 x 870	68.68	75.06	—	—	O
SDTV	480i	15.734	60	—	O	—
	576i	15.625	50	—	O	—
EDTV	480p	31.469	60	—	O	—
	576p	31.25	50	—	O	—
HDTV	720p	37.5	50	—	O	—
	720p	45.0	60	—	O	—
	1080i	33.8	60	—	O	—
	1080i	28.1	50	—	O	—

O: Frequency supported

—: Frequency not supported

* : Displayable level

The resolution of the panel for the DX420 is 1024 x 768. Resolution other than native resolution may display with uneven size of text or lines.

HDTV timing: DVD player (main source), VG828 (secondary source).

Projector Dimensions

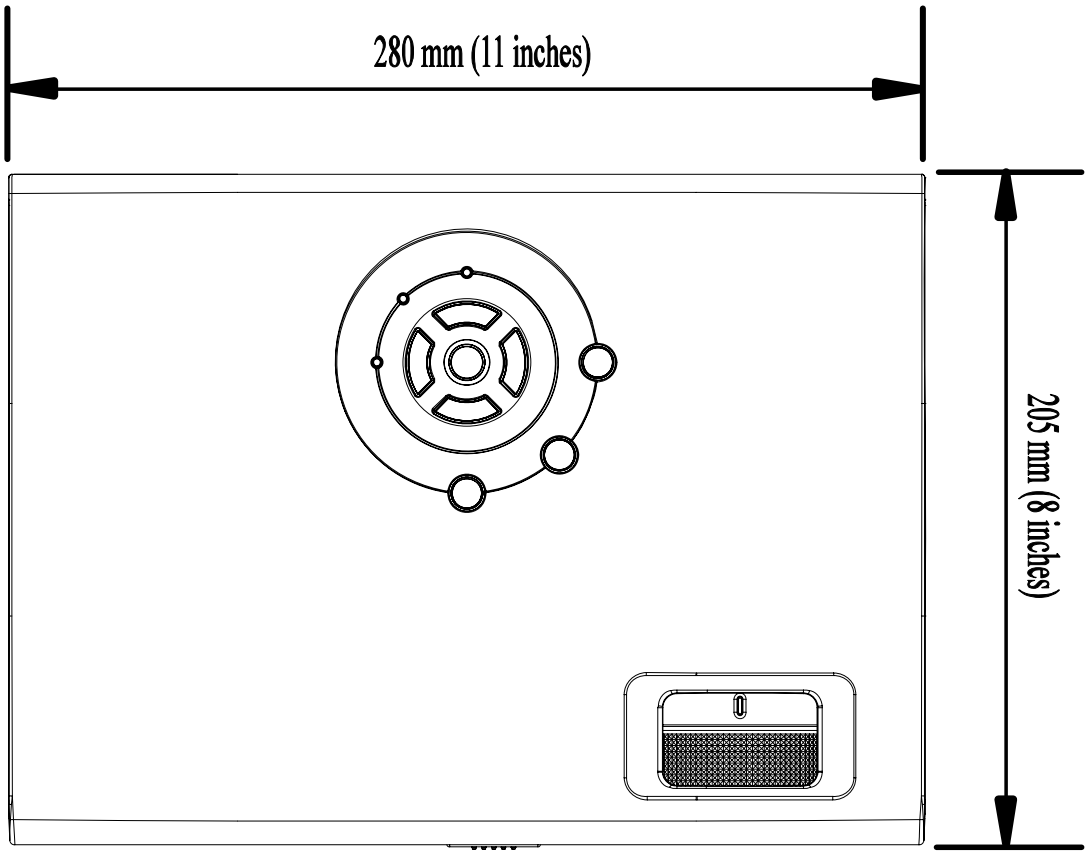

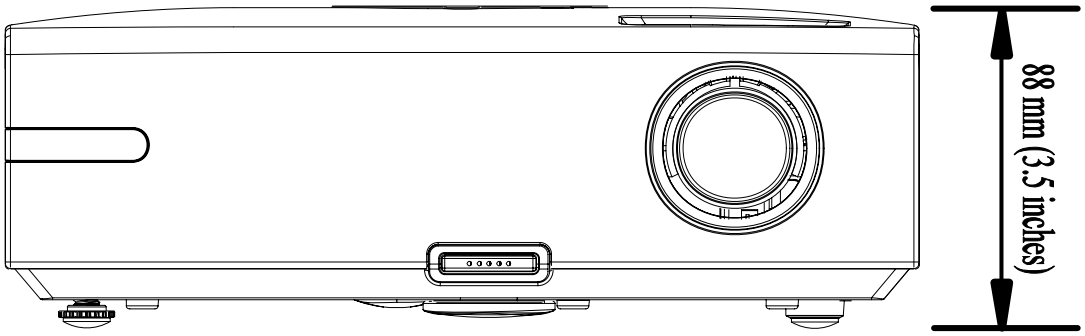

FCC Warning

This equipment has been tested and found to comply with the limits for a Class B digital device pursuant to Part 15 of the FCC Rules. These limits are designed to provide reasonable protection against harmful interference when the equipment is operated in a commercial environment.

This equipment generates, uses, and can radiate radio frequency energy and, if not installed and used in accordance with the instruction manual, may cause harmful interference to radio communications. Operation of this equipment in a residential area is likely to cause harmful interference in which case the user will be required to correct the interference at his/her own expense.

Changes or modifications not expressly approved by the parties responsible for compliance could void the user's authority to operate the equipment.

Canada

This class B digital apparatus complies with Canadian ICES-003.

Safety Certifications

FCC-B, UL, cUL, TUV, CB, CE, PCT, SASO and CCC.

EN 55022 Warning

This is a Class B product. In a domestic environment, it may cause radio interference, in which case the user may be required to take adequate measures. The typical use is in a conference room, meeting room, or auditorium.