myprojectorlamps.com

The most trusted, dependable name in projector lamp sales.

http://www.myprojectorlamps.com

http://www.myprojectorlamps.ca

http://www.myprojectorlamps.eu

The following projector manual has not been modified or altered in any way.

Copyright

This publication, including all photographs, illustrations and software, is protected under international copyright laws, with all rights reserved. Neither this manual, nor any of the material contained herein, may be reproduced without written consent of the author.

© Copyright 2009

Disclaimer

The information in this document is subject to change without notice. The manufacturer makes no representations or warranties with respect to the contents hereof and specifically disclaims any implied warranties of merchantability or fitness for any particular purpose. The manufacturer reserves the right to revise this publication and to make changes from time to time in the content hereof without obligation of the manufacturer to notify any person of such revision or changes.

Trademark Recognition

Kensington is a U.S. registered trademark of ACCO Brand Corporation with issued registrations and pending applications in other countries throughout the world.

All other product names used in this manual are the properties of their respective owners and are acknowledged.

Important Safety Information

> ***Important:***
> *It is strongly recommended that you read this section carefully before using the projector. These safety and usage instructions will ensure that you enjoy many years of safe use of the projector. Keep this manual for future reference.*

Symbols Used

Warning symbols are used on the unit and in this manual to alert you of hazardous situations.

The following styles are used in this manual to alert you to important information.

> ***Note:***
> *Provides additional information on the topic at hand.*

> ***Important:***
> *Provides additional information that should not be overlooked.*

> ***Caution:***
> *Alerts you to situations that may damage the unit.*

> ***Warning:***
> *Alerts you to situations that may damage the unit, create a hazardous environment, or cause personal injury.*

Throughout this manual, component parts and items in the OSD menus are denoted in bold font as in this example:
"Push the **Menu** button on the remote control to open the **Main** menu."

General Safety Information

- Do not open the unit case. Aside from the projection lamp, there are no user-serviceable parts in the unit. For servicing, contact qualified service personnel.
- Follow all warnings and cautions in this manual and on the unit case.
- The projection lamp is extremely bright by design. To avoid damage to eyes, do not look into the lens when the lamp is on.
- Do not place the unit on an unstable surface, cart, or stand.
- Avoid using the system near water, in direct sunlight, or near a heating device.
- Do not place heavy objects such as books or bags on the unit.

Projector Installation Notice

- Place the projector in a horizontal position
  The tilt angle of the projector should not exceed 15 degrees, nor should the projector be installed in any way other than the desktop and ceiling mount, otherwise lamp life could decrease dramatically.

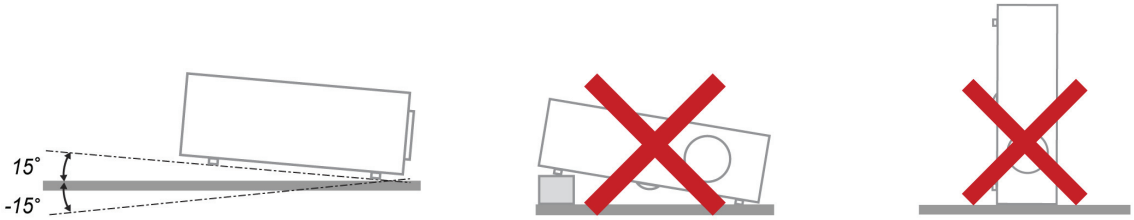

- Allow at least 50 cm clearance around the exhaust vent.

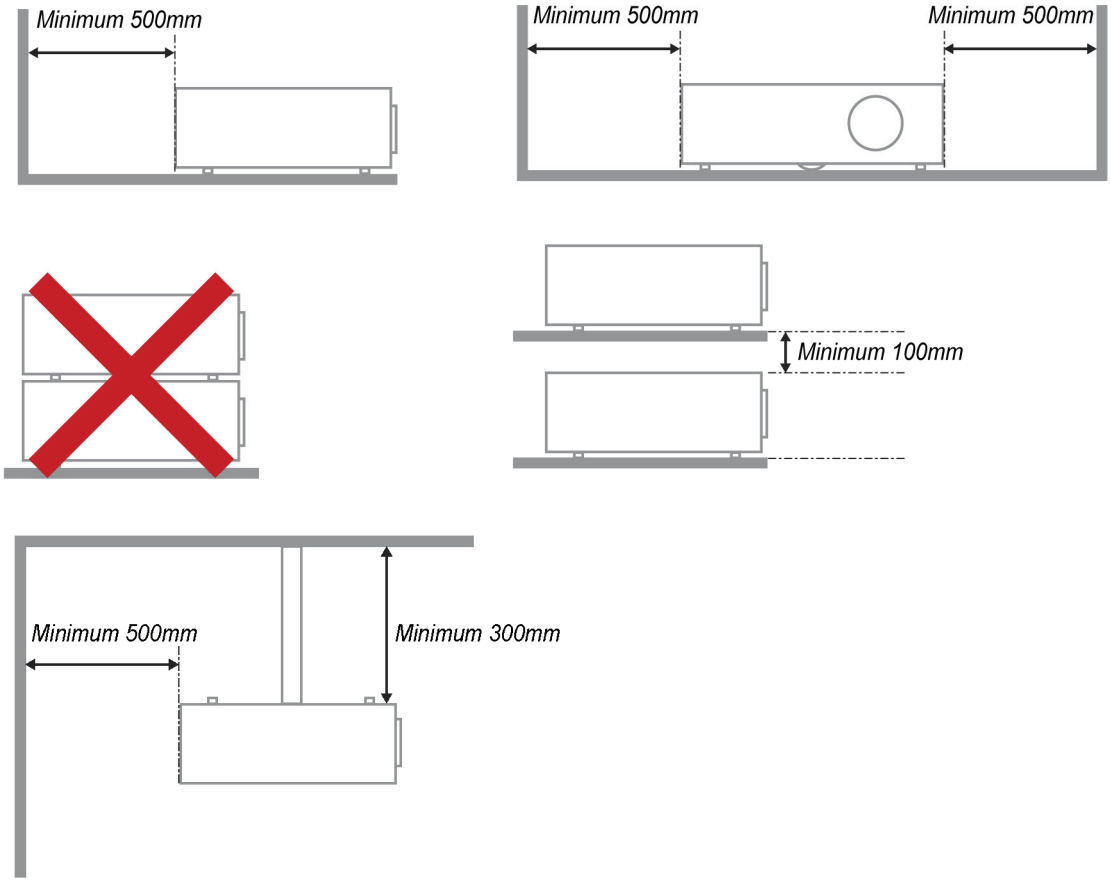

- Ensure that the intake vents do not recycle hot air from the exhaust vent.
- When operating the projector in an enclosed space, ensure that the surrounding air temperature within the enclosure does not exceed 5 – 35°C while the projector is running, and the air intake and exhaust vents are unobstructed.
- All enclosures should pass a certified thermal evaluation to ensure that the projector does not recycle exhaust air, as this may cause the device to shutdown even if the enclosure temperature is with the acceptable 5 – 35°C range.

Power Safety

- Only use the supplied power cord.
- Do not place anything on the power cord. Place the power cord where it will not be in the way of foot traffic.
- Remove the batteries from the remote control when storing or not in use for a prolonged period.

Replacing the Lamp

Replacing the lamp can be hazardous if done incorrectly. See *Replacing the Projection Lamp* on page 39 for clear and safe instructions for this procedure. Before replacing the lamp:

- Unplug the power cord.
- Allow the lamp to cool for about one hour.

Cleaning the Projector

- Unplug the power cord before cleaning. See *Cleaning the Projector* on page 42.
- Allow the lamp to cool for about one hour.

Regulatory Warnings

Before installing and using the projector, read the regulatory notices in the *Regulatory Compliance* section on page 53.

Important Recycle Instructions:

Hg Lamp(s) inside this product contain mercury. This product may contain other electronic waste that can be hazardous if not disposed of properly. Recycle or dispose in accordance with local, state, or federal Laws. For more information, contact the Electronic Industries Alliance at WWW.EIAE.ORG. For lamp specific disposal information check WWW.LAMPRECYCLE.ORG.

Symbol Explanations

DISPOSAL: Do not use household or municipal waste collection services for disposal of electrical and electronic equipment. EU countries require the use of separate recycling collection services.

Main Features

- *Lightweight unit, easy to pack away and transport.*
- *Compatible with all major video standards including NTSC, PAL, and SECAM.*
- *A high brightness rating allows for presentations in daylight or in lit rooms.*
- *Supports resolutions up to SXGA+ at 16.7 million colors to deliver crisp, clear images.*
- *Flexible setup allows for front, rear projections.*
- *Line-of-vision projections remain square, with advanced keystone correction for angled projections.*
- *Input source automatically detected.*

About this manual

This manual is intended for end users and describes how to install and operate the DLP projector. Wherever possible, relevant information—such as an illustration and its description—has been kept on one page. This printer-friendly format is both for your convenience and to help save paper, thereby protecting the environment. It is suggested that you only print sections that are relevant to your needs.

Table of Contents

GETTING STARTED **1**

PACKING CHECKLIST 1
VIEWS OF PROJECTOR PARTS 2
D9 SERIES Front-right View *2*
Top view—On-screen Display (OSD) buttons and LEDs *3*
Rear view *4*
Bottom view *5*
REMOTE CONTROL PARTS 6
REMOTE CONTROL OPERATING RANGE 8
PROJECTOR AND REMOTE CONTROL BUTTONS 8

SETUP AND OPERATION **9**

INSERTING THE REMOTE CONTROL BATTERIES 9
CONNECTING INPUT DEVICES 10
STARTING AND SHUTTING DOWN THE PROJECTOR 11
SETTING AN ACCESS PASSWORD (SECURITY LOCK) 13
ADJUSTING THE PROJECTOR LEVEL 15
ADJUSTING THE ZOOM RING (VX SERIES ONLY), FOCUS AND KEYSTONE 16
ADJUSTING THE VOLUME 17

ON-SCREEN DISPLAY (OSD) MENU SETTINGS **18**

OSD MENU CONTROLS 18
Navigating the OSD *18*
SETTING THE OSD LANGUAGE 19
OSD MENU OVERVIEW 20
OSD SUB-MENU OVERVIEW 21
IMAGE MENU 22
Advanced Feature *23*
Color Manager *24*
COMPUTER MENU 25
VIDEO/AUDIO MENU 26
Audio *27*
INSTALLATION I MENU 28
INSTALLATION II MENU 29
Advanced Feature *30*
OSD Menu Setting *31*
Peripheral Test *31*
Lamp Hour Reset *32*
Network *32*
Factory Reset *38*
Status *38*

MAINTENANCE AND SECURITY **39**

REPLACING THE PROJECTION LAMP 39
Resetting the Lamp *41*
CLEANING THE PROJECTOR 42
Cleaning the Lens *42*
Cleaning the Case *42*
USING THE KENSINGTON® LOCK 43

TROUBLESHOOTING **44**

COMMON PROBLEMS AND SOLUTIONS 44
TIPS FOR TROUBLESHOOTING 44
LED ERROR MESSAGES 45
IMAGE PROBLEMS 45
LAMP PROBLEMS 46
REMOTE CONTROL PROBLEMS 46
AUDIO PROBLEMS 47

HAVING THE PROJECTOR SERVICED 47

SPECIFICATIONS 48

SPECIFICATIONS 48
PROJECTION DISTANCE VS. PROJECTION SIZE 49
D9 SERIES Projection Distance and Size Table 49
D9 SERIES TIMING MODE TABLE 50
PROJECTOR DIMENSIONS 52

REGULATORY COMPLIANCE 53

FCC WARNING 53
CANADA 53
SAFETY CERTIFICATIONS 53
EN 55022 WARNING 53

GETTING STARTED

Packing Checklist

Carefully unpack the projector and check that the following items are included:

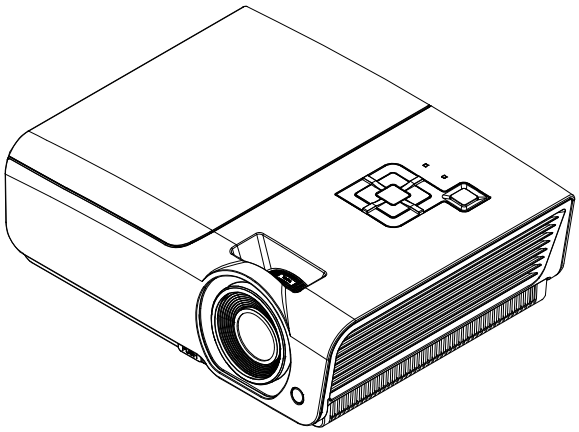

D9 SERIES DLP PROJECTOR

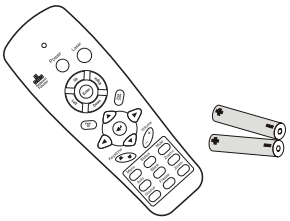

REMOTE CONTROL (WITH TWO AAA BATTERIES)

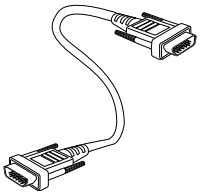

RGB CABLE

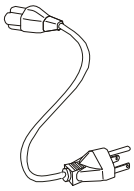

POWER CORD

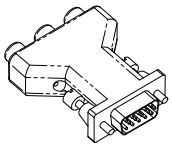

RGB TO COMPONENT ADAPTER (OPTIONAL)

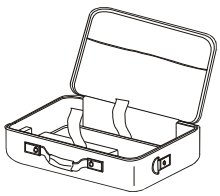

CARRYING CASE

CD-ROM (THIS USER'S MANUAL)

WARRANTY CARD

Contact your dealer immediately if any items are missing, appear damaged, or if the unit does not work. It is recommend that you keep the original packing material should you ever need to return the equipment for warranty service.

Caution:
Avoid using the projector in dusty environments.

Views of Projector Parts

D9 SERIES Front-right View

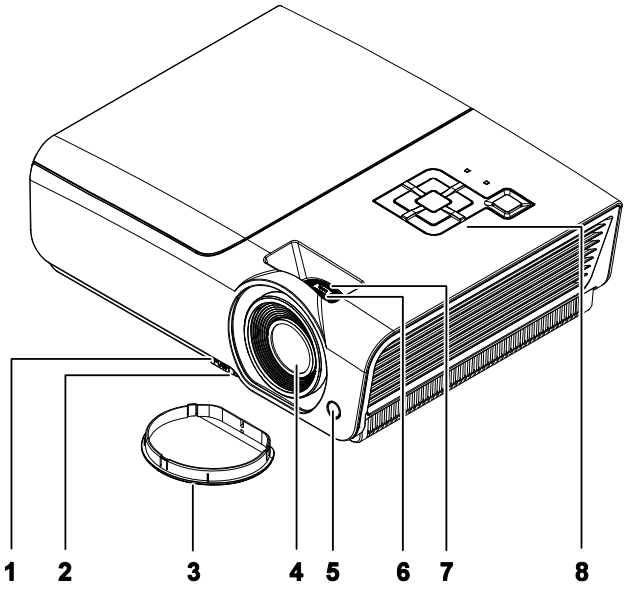

ITEM	LABEL	DESCRIPTION	SEE PAGE:
1.	Height-adjuster button	Push to release height adjuster	***15***
2.	Height adjuster	Adjusts level of projector	
3.	Lens cap	Protect lens when not in use	
4.	Lens	Projection Lens	
5.	IR receiver	Receive IR signal from remote control	***6***
6.	Focus ring	Focuses the projected image	***16***
7.	Zoom ring (VX Series only)	Enlarges the projected image	
8.	Function keys	See Top view—On-screen Display (OSD) buttons and LEDs.	***3***

Important:
Ventilation openings on the projector allow for good air circulation, which keeps the projector lamp cool. Do not obstruct any of the ventilation openings.

Note:
D930TX does not have the zoom ring.

Top view—On-screen Display (OSD) buttons and LEDs

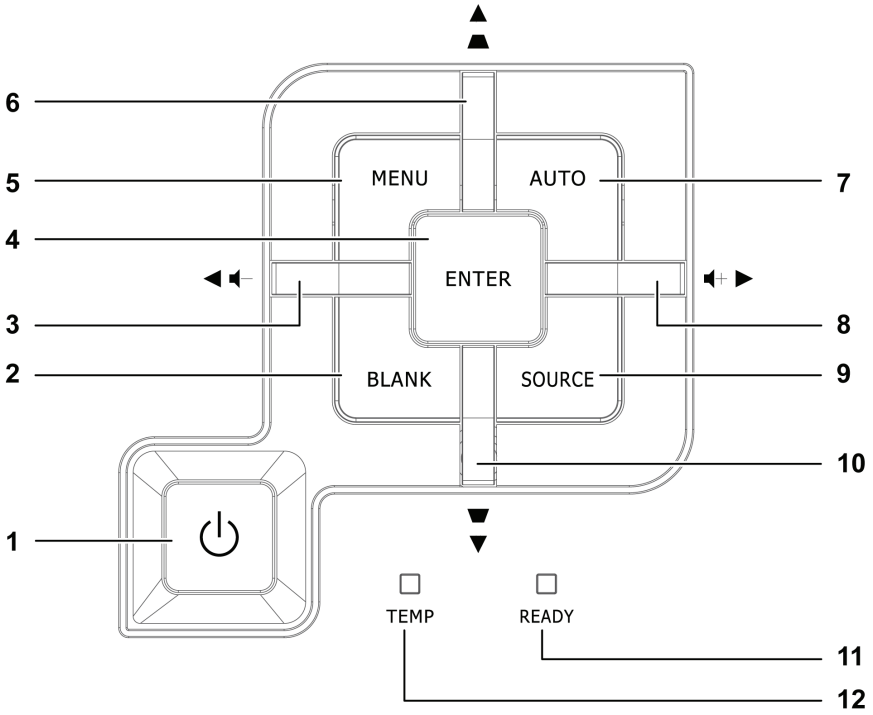

ITEM	LABEL	DESCRIPTION		SEE PAGE:
1.	⏻ (Power button)	Turns the projector On or Off.		***11***
2.	BLANK	Displays a blank screen and mutes audio		
3.	◄ (Left cursor) / Volume	Navigates and changes settings in the OSD Quick Menu – For Volume		***18***
4.	Enter	Enter or confirm highlighted OSD menu item		
5.	MENU	Opens and exits OSD menus		
6.	▲ (Up cursor) / Keystone+	Navigates and changes settings in the OSD Quick Menu – For Keystone		
7.	AUTO	Optimizes image size, position, and resolution		
8.	► (Right cursor) / Volume	Navigates and changes settings in the OSD Quick Menu – For Volume		***18***
9.	SOURCE	Enter the Source menu		***10***
10.	▼ (Down cursor) / Keystone-	Navigates and changes settings in the OSD Quick Menu – For Keystone		***18***
11.	READY LED	Red	Lamp is ready to be powered-on.	
		Flashing	Lamp not ready (Warm-up/shutting down/cooling) (see *LED Error Messages* on page 45)	
12.	TEMP LED	Flashing	Error code	

Rear view

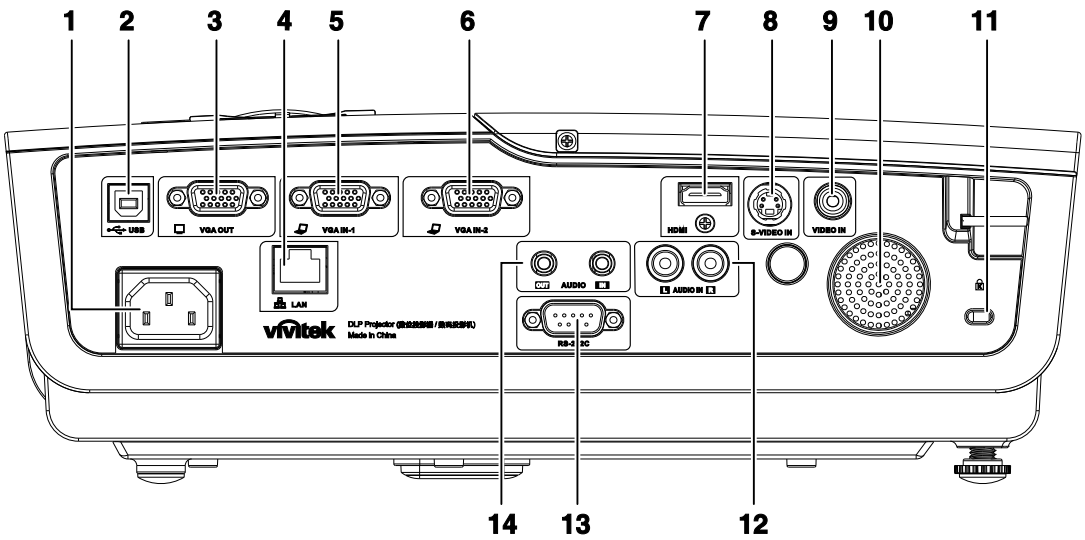

ITEM	LABEL	DESCRIPTION	SEE PAGE:
1.	AC IN	Connect the POWER CABLE	*11*
2.	(USB)	Connect the USB CABLE from a computer	*10*
3.	VGA OUT	Connect the RGB CABLE to a display (Loop Thru only for VGA IN-1)	
4.	LAN	Connect a LAN CABLE from Ethernet	
5.	VGA IN – 1	Connect the RGB CABLE from a computer and components	
6.	VGA IN – 2	Connect the RGB CABLE from a computer and components	
7.	HDMI	Connect the HDMI CABLE from a HDMI device	
8.	S-VIDEO IN	Connect the S-VIDEO CABLE from a video device	
9.	VIDEO IN	Connect the COMPOSITE CABLE from a video device	
10.	Speaker	Outputs audio sound	
11.	Kensington Lock	Secure to permanent object with a Kensington® Lock system	*43*
12.	AUDIO IN (L and R)	Connect the AUDIO CABLES from a audio device	*10*
13.	RS-232	Connect RS-232 serial port cable for remote control	
14.	AUDIO IN AUDIO OUT	Connect an AUDIO CABLE from the input device Connect an AUDIO CABLE for audio loop through	

Note:
If your video equipment has various input sources, it is recommended to connect in priority of HDMI/DVI, component (thru VGA), S-Video, Composite for better picture quality.

Bottom view

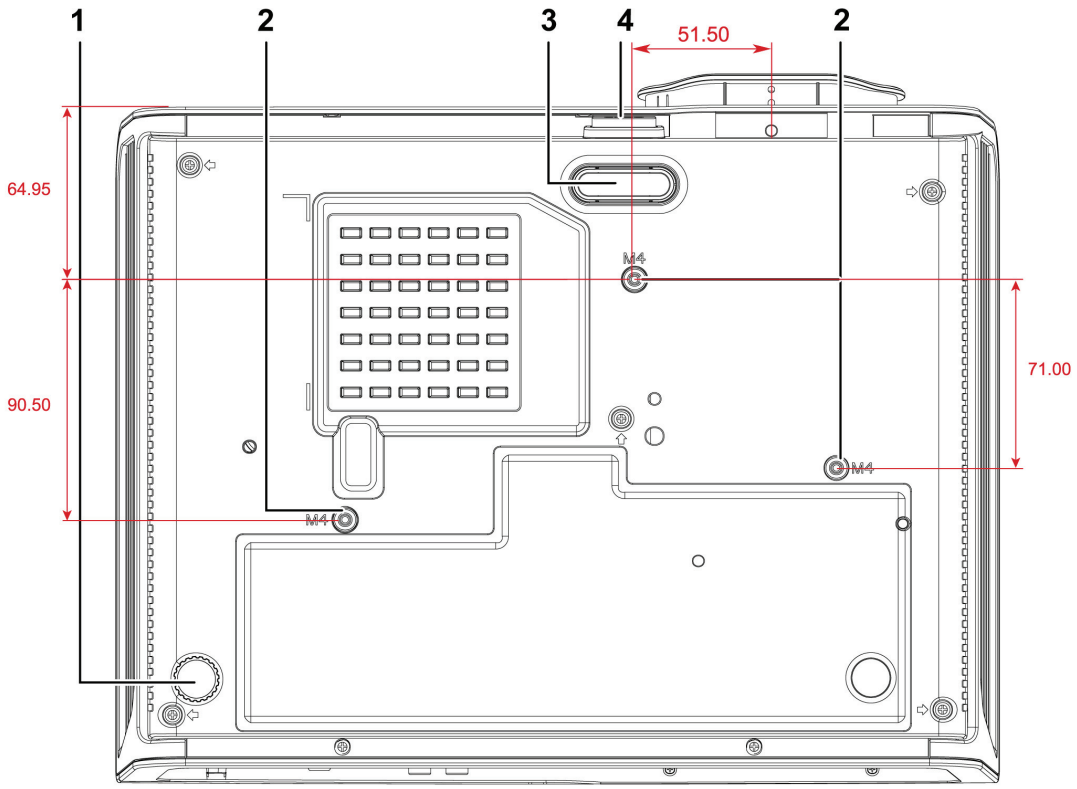

ITEM	LABEL	DESCRIPTION	SEE PAGE:
1.	Tilt adjustor	Rotate adjuster lever to adjust angle position.	***15***
2.	Ceiling support holes	Contact your dealer for information on mounting the projector on a ceiling	
3.	Height adjustor	Adjuster drops down when adjuster button is pushed.	***15***
4.	Height adjustor button	Push to release adjustor.	

Note:
When installing, ensure that you use only UL Listed ceiling mounts.
For ceiling installations, use approved mounting hardware and M4 screws with a maximum screw depth of 6 mm (0.23 inch).
The construction of the ceiling mount must be of a suitable shape and strength. The ceiling mount load capacity must exceed the weight of the installed equipment, and as an additional precaution be capable of withstanding three times the weight of the equipment (not less than 5.15 kg) over a period of 60 seconds.

Remote Control Parts

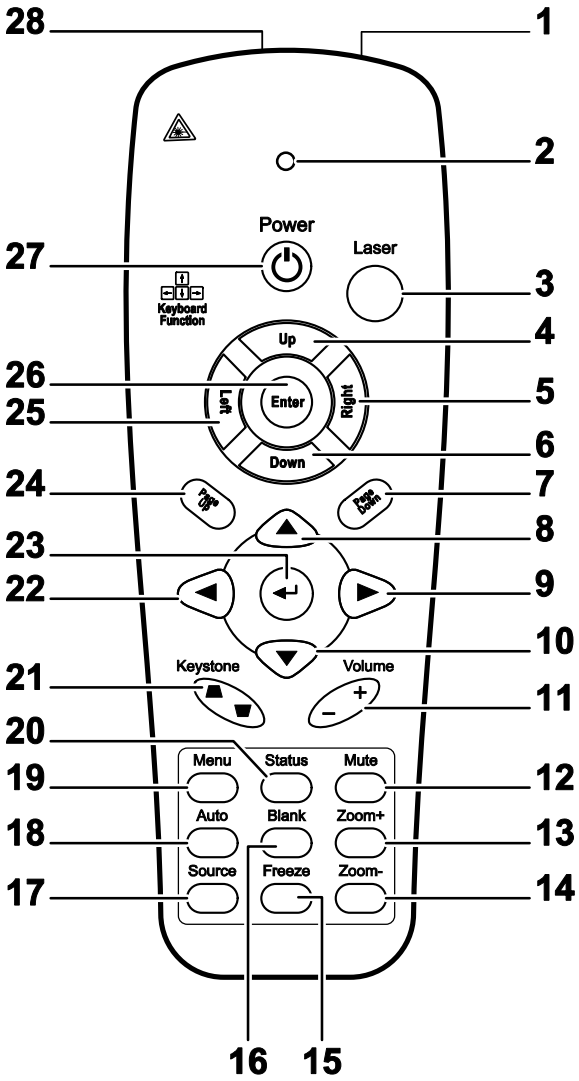

Important:

1. *Avoid using the projector with bright fluorescent lighting turned on. Certain high-frequency fluorescent lights can disrupt remote control operation.*

2. *Be sure nothing obstructs the path between the remote control and the projector. If the path between the remote control and the projector is obstructed, you can bounce the signal off certain reflective surfaces such as projector screens.*

3. *The buttons and keys on the projector have the same functions as the corresponding buttons on the remote control. This user's manual describes the functions based on the remote control.*

ITEM	LABEL	DESCRIPTION	SEE PAGE:
1.	IR transmitter	Transmits signals to projector	
2.	Status LED	Lights when the remote control is used	
3.	Laser	Press to operate the on-screen pointer	
4.	Up	Up arrow when connected through USB to a PC	
5.	Right	Right arrow when connected through USB to a PC	
6.	Down	Down arrow when connected through USB to a PC	
7.	Page Down	Page down when connected through USB to a PC	
8.	Up cursor	Navigates and changes settings in the OSD	*18*
9.	Right cursor		
10.	Down cursor		
11.	Volume +/-	Adjusts volume	*17*
12.	Mute	Mutes the built-in speaker	
13.	Zoom+	Zoom in	*16*
14.	Zoom-	Zoom out	
15.	Freeze	Freeze/unfreezes the on-screen picture	
16.	Blank	Makes the screen blank	
17.	Source	Detects the input device	
18.	Auto	Auto adjustment for phase, tracking, size, position	
19.	Menu	Opens the OSD	*18*
20.	Status	Opens the OSD Status menu (the menu only opens when an input device is detected)	*38*
21.	Keystone top/bottom	Corrects image-trapezoid (wider top/bottom) effect	*16*
22.	Left cursor	Navigates and changes settings in the OSD	*18*
23.	Enter	Changes settings in the OSD	
24.	Page Up	Page up when connected through USB to a PC	
25.	Left	Left arrow when connected through USB to a PC	
26.	Enter	Enter key when connected through USB to a PC	
27.	Power	Turns the projector on or off	*11*
28.	Laser	Use as on-screen pointer. **DO NOT POINT IN EYES**.	

Remote Control Operating Range

The remote control uses infrared transmission to control the projector. It is not necessary to point the remote directly at the projector. Provided you are not holding the remote perpendicular to the sides or the rear of the projector, the remote will function well within a radius of about 7 meters (23 feet) and 15 degrees above or below the projector level. If the projector does not respond to the remote control, move a little closer.

Projector and Remote Control Buttons

The projector can be operated using the remote control or the buttons on the top of the projector. All operations can be carried out with the remote control; however, the buttons on the projector are limited in use.

Inserting the Remote Control Batteries

1. Remove the battery compartment cover by sliding the cover in the direction of the arrow.

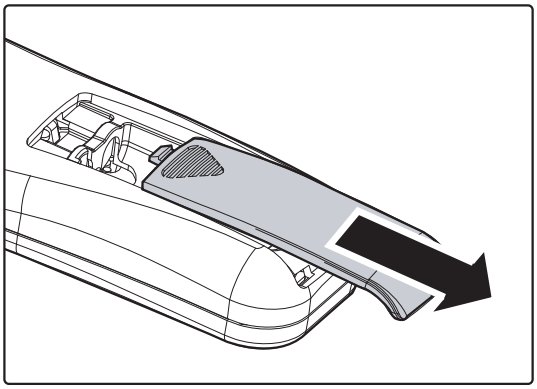

2. Insert the battery with the positive side facing up.

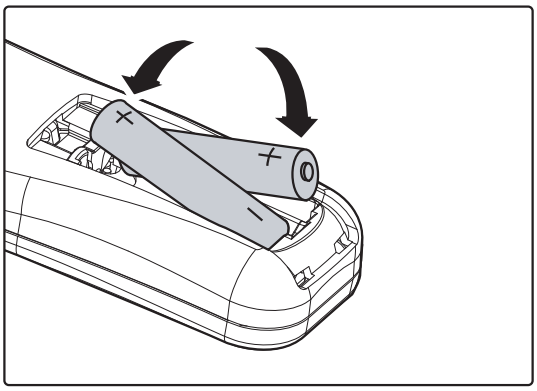

3. Replace the cover.

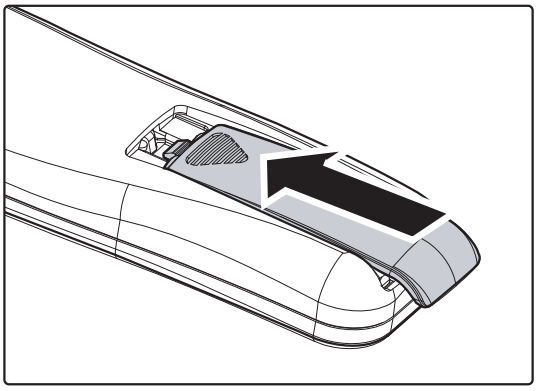

Caution:

1. *Only use AAA batteries (Alkaline batteries are recommended).*

2. *Dispose of used batteries according to local ordinance regulations.*

3. *Remove the batteries when not using the projector for prolonged periods.*

Connecting Input Devices

A PC or notebook computer and video devices can be connected to the projector at the same time. Video devices include DVD, VCD, and VHS players, as well as movie camcorders and digital still cameras. Check the user manual of the connecting device to confirm it has the appropriate output connector.

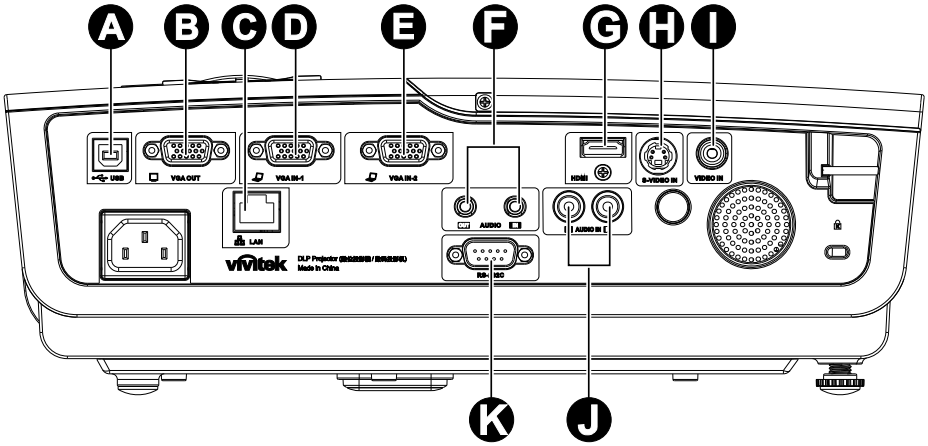

ITEM	LABEL	DESCRIPTION
A	(USB)	Connect the USB CABLE from a computer
B	VGA OUT	Connect the RGB CABLE to a display (Loop Thru only for VGA IN-1)
C	LAN	Connect a LAN CABLE from Ethernet
D	VGA IN – 1	Connect the RGB CABLE from a computer and components
E	VGA IN – 2	Connect the RGB CABLE from a computer and components
F	AUDIO IN AUDIO OUT	Connect an AUDIO CABLE from the input device Connect an AUDIO CABLE for audio loop through
G	HDMI	Connect the HDMI CABLE from a HDMI device
H	S-VIDEO	Connect the S-VIDEO CABLE from a video device
I	VIDEO IN	Connect the COMPOSITE CABLE from a video device
J	AUDIO IN (L and R)	Connect the AUDIO CABLES from a audio device
K	RS-232C	Connect the RS-232 serial cable for remote control

Warning:
As a safety precaution, disconnect all power to the projector and connecting devices before making connections.

Starting and Shutting down the Projector

1. Connect the power cord to the projector. Connect the other end to a wall outlet. The ⏻ **POWER** and **READY** LEDs on the projector light.

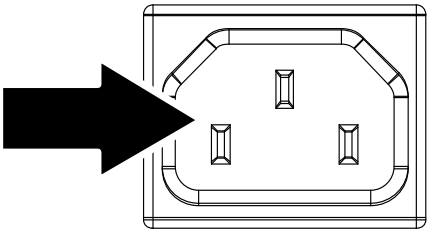

2. Turn on the connected devices.

3. Ensure the **READY** LED displays a solid red and not a flashing red. Then press the ⏻ **POWER** button to turn on the projector.

   The projector splash screen displays and connected devices are detected.

   See *Setting an Access Password (Security Lock)* on page 13 if security lock is enabled.

4. If more than one input device is connected, press the **SOURCE** button and use ▲▼ to scroll among devices. (Component is supported through the RGB to COMPONENT ADAPTER.)

- VGA 1/VGA 2: Analog RGB
  Component: DVD input YCbCr / YPbPr, or HDTV input YPbPr via HD15 connector
- Composite Video: Traditional composite video
- S-Video: Super video (Y/C separated)
- HDMI: HDMI, DVI

5. When the "Power Off? /Press Power again" message appears, press the **POWER** button. The projector turns off.

Caution:

1. Be sure to remove the lens cap before starting projector.

2. Do not unplug the power cord until the READY LED stops flashing–indicating the projector has cooled down.

Setting an Access Password (Security Lock)

You can use the four (arrow) buttons to set a password and prevent unauthorized use of the projector. When enabled, the password must be entered after you power on the projector. (See *Navigating the OSD* on page 18 and *Setting the OSD Language* on page 19 for help on using OSD menus.)

> ***Important:***
> *Keep the password in a safe place. Without the password, you will not be able to use the projector. If you lose the password, contact your reseller for information on clearing the password.*

1. Press the **MENU** button to open the OSD menu.

2. Press the cursor ◄► button to move to the **Installation I** menu.

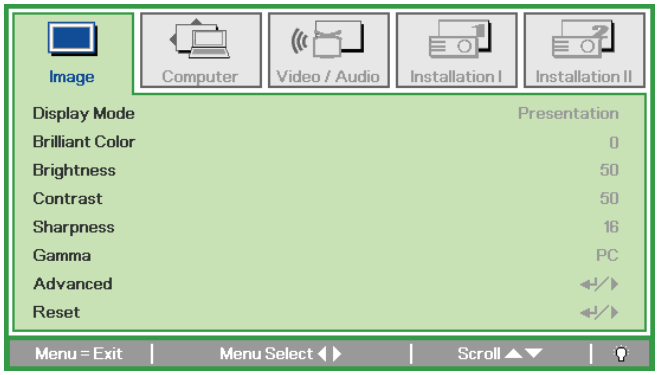

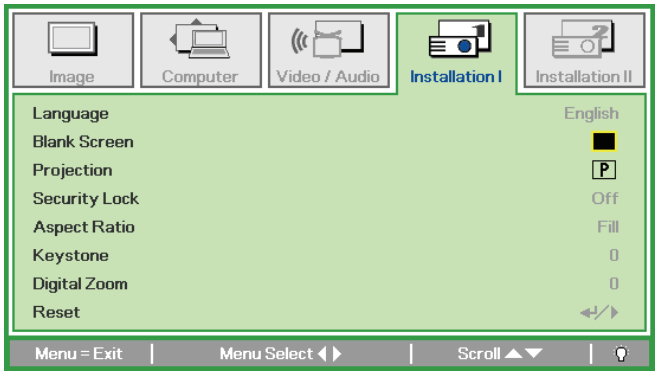

3. Press the cursor ▲▼ button to select **Security Lock**.

4. Press the cursor ◄► button to enable or disable security lock function.

   A password dialog box automatically appears.

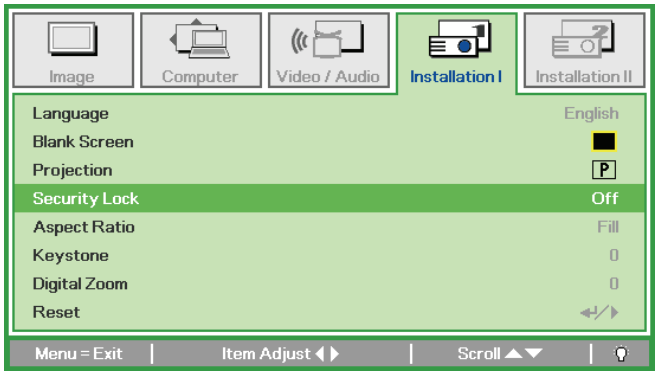

5. You can use the cursor buttons ▲▼◄► either on keypad or IR remote control for password entry. You can use any combination including the same arrow five times, but not less than five.

Press the cursor buttons in any order to set the password. Push the **MENU** button to exit the dialog box.

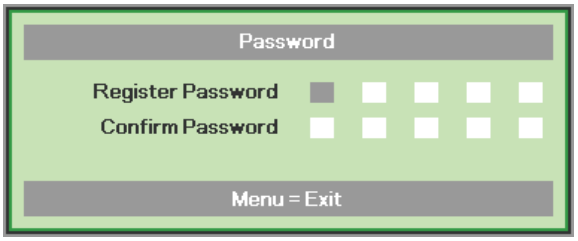

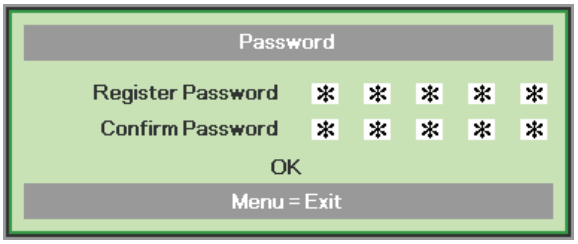

6. The password confirm menu appears when user presses the power-on key in case the **Security Lock** is enabled.
Enter the password in the order you set it at step 5. In case you forget the password, please contact the service center.
Service center will validate the owner and help reset the password.

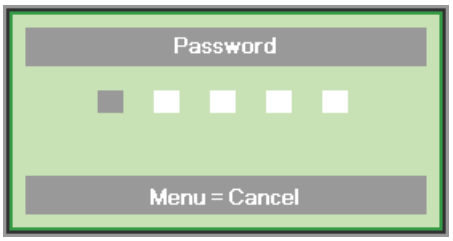

Adjusting the Projector Level

Take note of the following when setting up the projector:

- *The projector table or stand should be level and sturdy.*
- *Position the projector so that it is perpendicular to the screen.*
- *Ensure the cables are in a safe location. You could trip over them.*

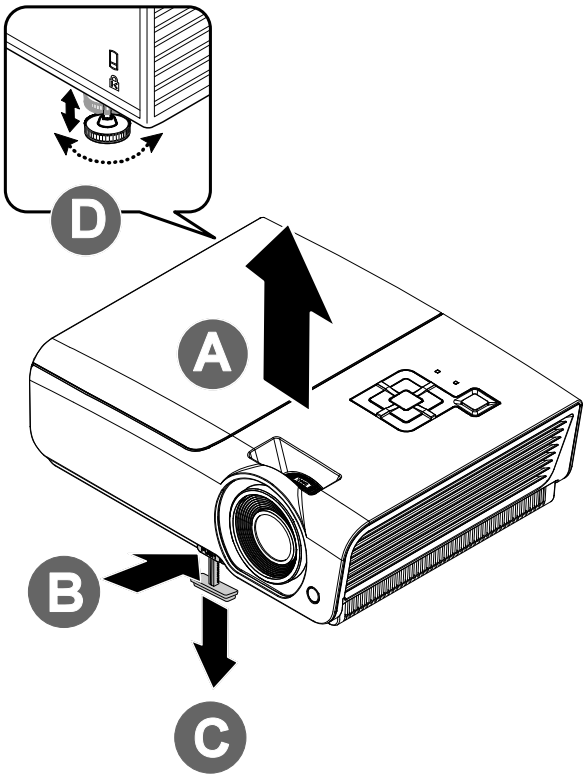

1. To raise the level of the projector, lift the projector **[A]** and press the height-adjuster button **[B]**.

   The height adjuster drops down **[C]**.

2. To lower the level of the projector, press the height-adjuster button and push down on the top of the projector.

3. To adjust the angle of the picture, turn the tilt-adjuster **[D]** right or left until the desired angle has been achieved.

Adjusting the Zoom ring (VX Series only), Focus and Keystone

1. Use the **Image-zoom** control (on the projector only) to resize the projected image and screen size B.

2. Use the **Image-focus** control (on the projector only) to sharpen the projected image A.

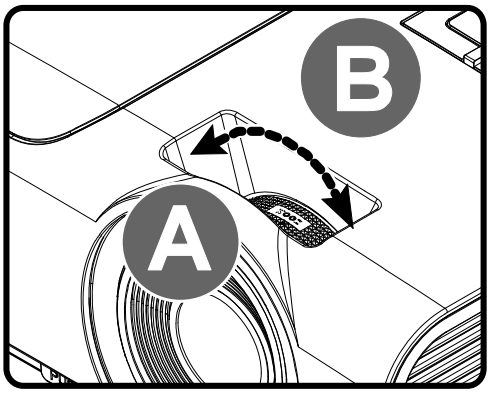

3. Use the **KEYSTONE** buttons (on the projector or the remote control) to correct image-trapezoid (wider top or bottom) effect.

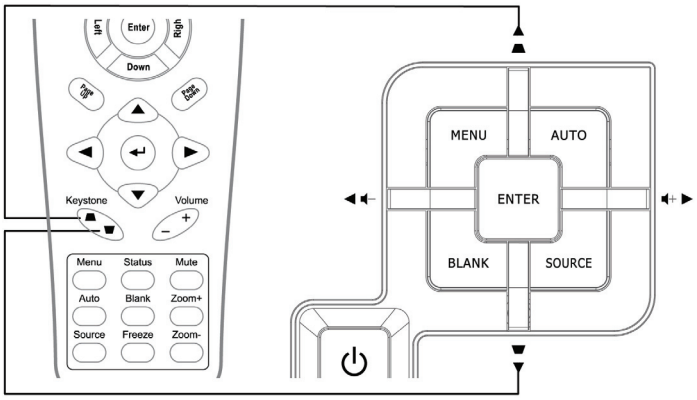

Remote control and OSD panel

4. The keystone control appears on the display.

Note:
D930TX does not have the zoom ring.

Adjusting the Volume

1. Press the **Volume +/-** buttons on the remote control.
   The volume control appears on the display.

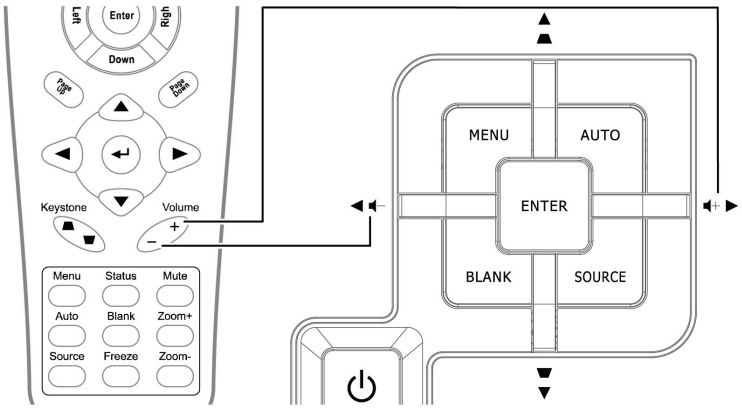

2. Press the **Left** or **Right Cursor** buttons on the keypad to adjust **Volume +/-**.

3. Press the **MUTE** button to turn off the volume (This feature is available only on the remote).

OSD Menu Controls

The projector has an OSD that lets you make image adjustments and change various settings.

Navigating the OSD

You can use the remote control cursor buttons or the buttons on the top of the projector to navigate and make changes to the OSD. The following illustration shows the corresponding buttons on the projector.

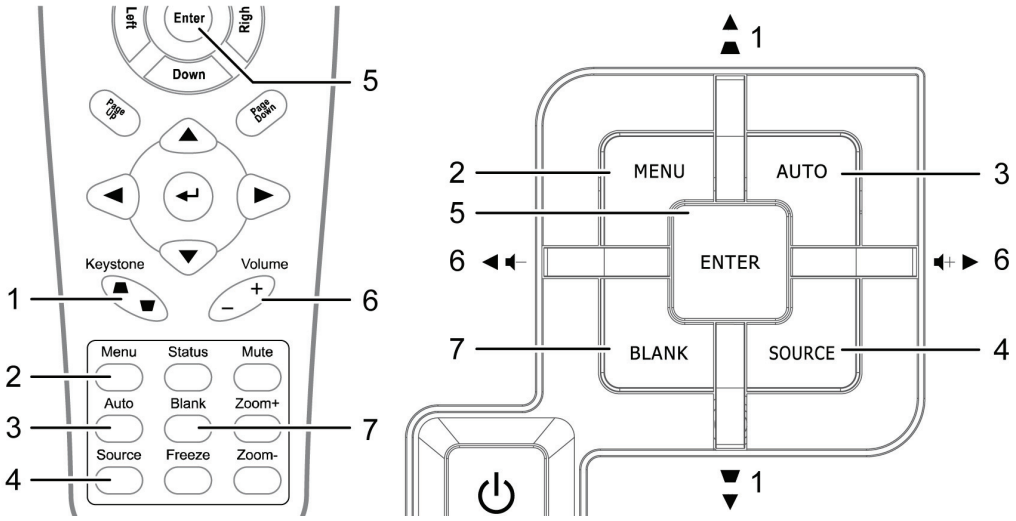

1. To enter the OSD, press the **MENU** button.
2. There are five menus. Press the cursor ◄► button to move through the menus.
3. Press the cursor ▲▼ button to move up and down in a menu.
4. Press ◄► to change values for settings.
5. Press **MENU** to close the OSD or leave a submenu.

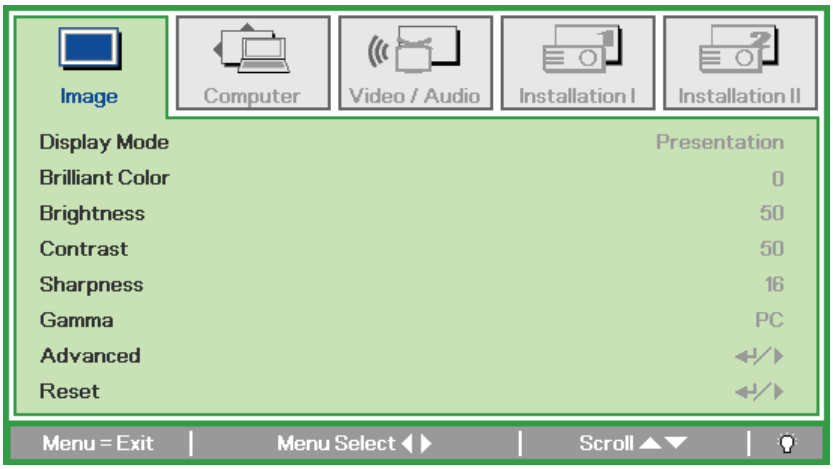

Note:
Depending on the video source, not all items in the OSD are available. For example, the ***Horizontal/Vertical Position*** *items in the* ***Computer*** *menu can only be modified when connected to a PC. Items that are not available cannot be accessed and are grayed out.*

Setting the OSD Language

Set the OSD language to your preference before continuing.

1. Press the **MENU** button. Press the cursor ◄► button to navigate to Installation I.

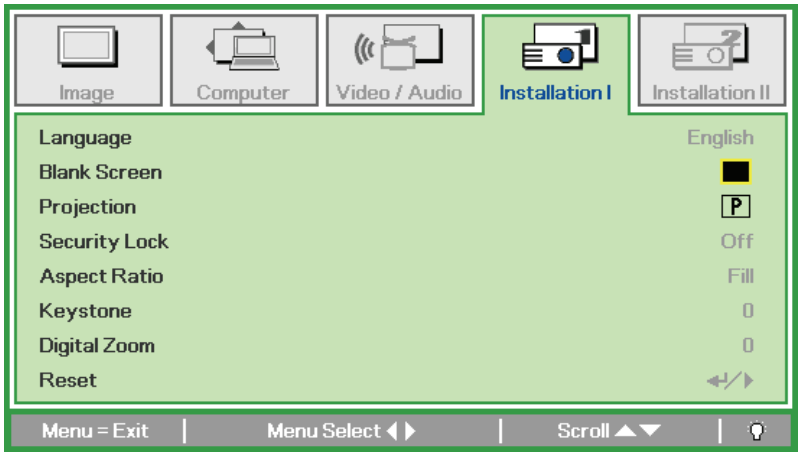

2. Press the cursor ▲▼ button until **Language** is highlighted.

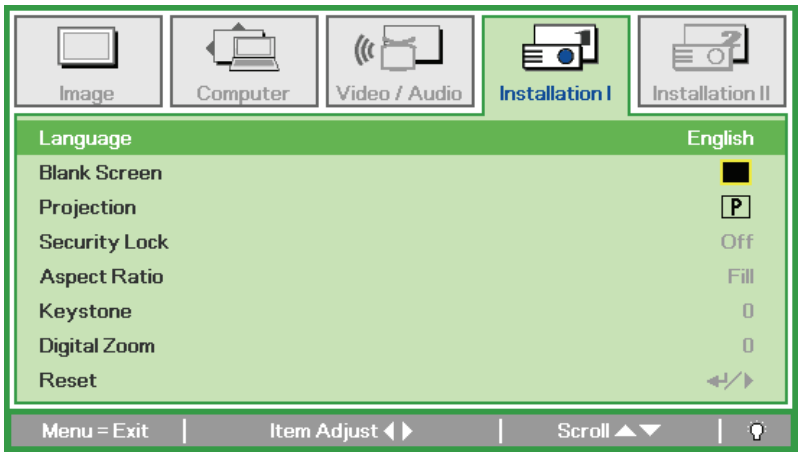

3. Press the cursor ◄► button until the language you want is highlighted.
4. Press the **MENU** button twice to close the OSD.

OSD Menu Overview

Use the following illustration to quickly find a setting or determine the range for a setting.

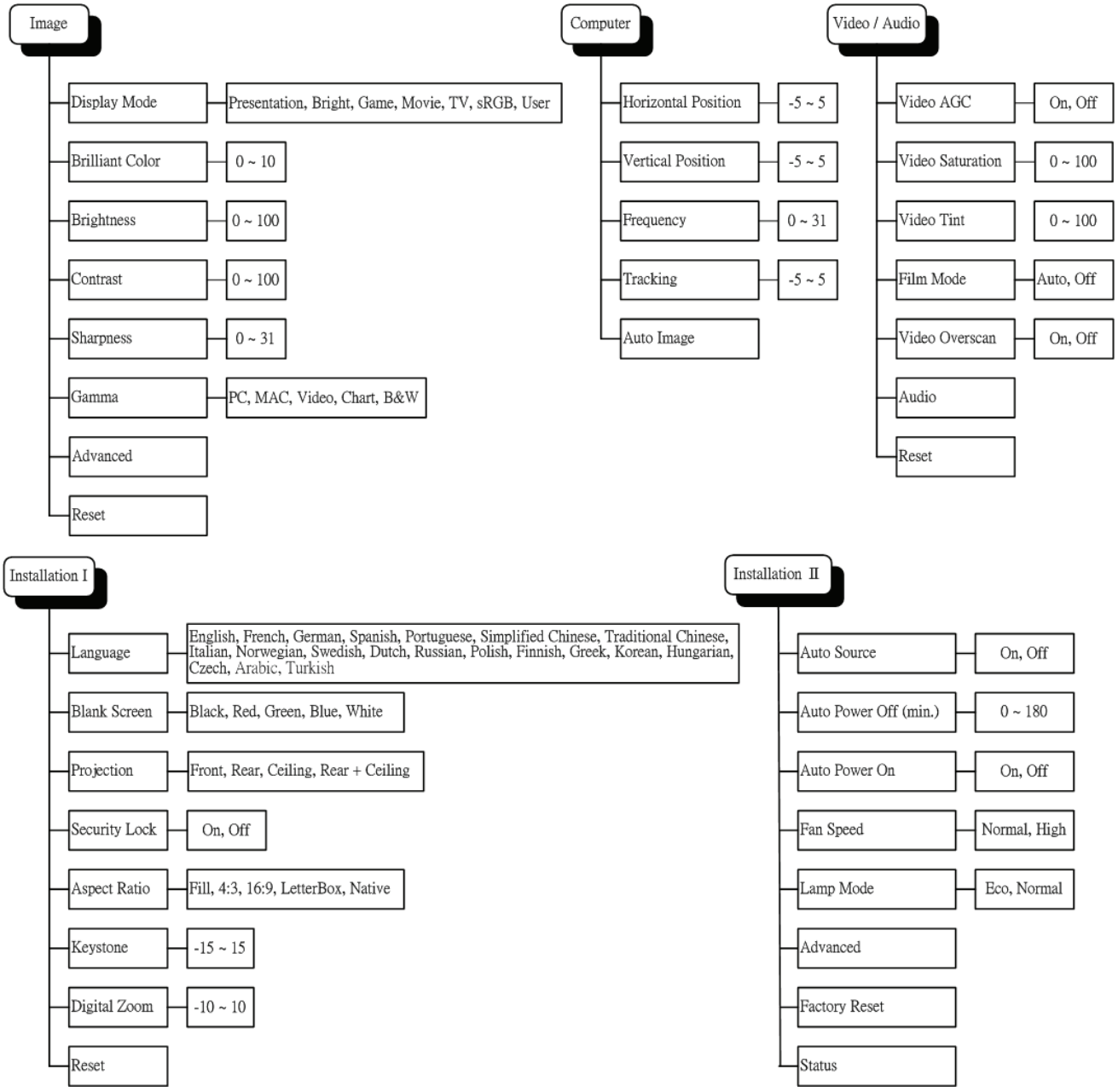

OSD Sub-Menu Overview

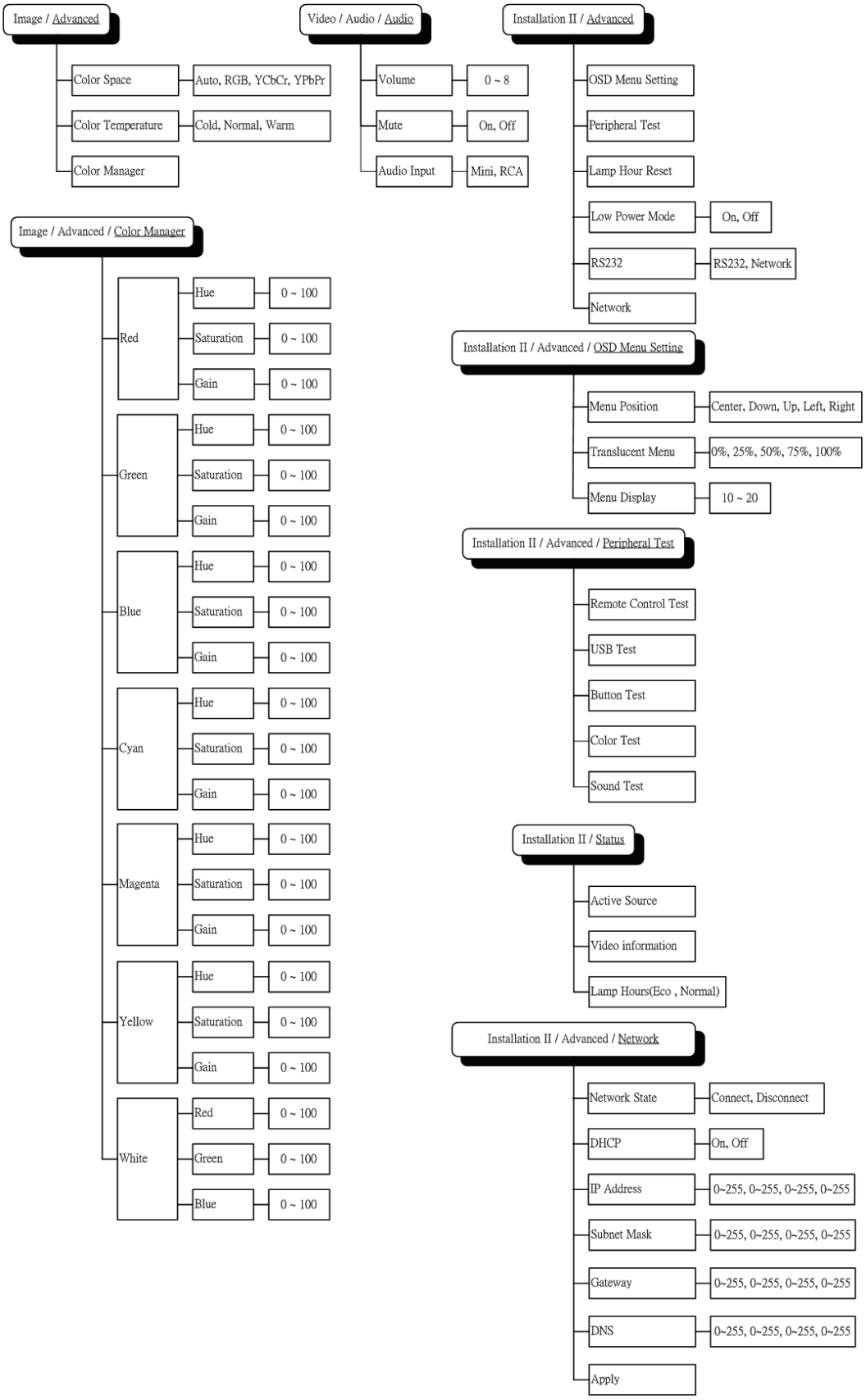

Image Menu

Press the **MENU** button to open the **OSD** menu. Press the cursor ◄► button to move to the **Image Menu**. Press the cursor ▲▼ button to move up and down in the **Image** menu. Press ◄► to change values for settings.

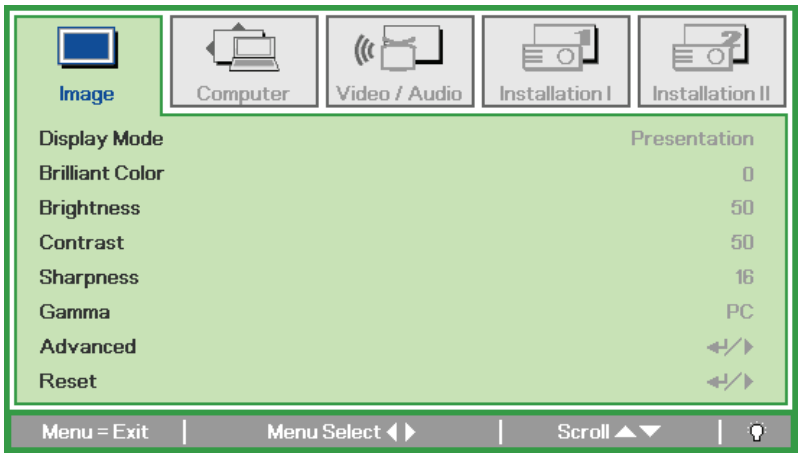

ITEM	DESCRIPTION
Display Mode	Press the cursor ◄► button to set the Display Mode.
Brilliant Color	Press the cursor ◄► button to adjust the Brilliant Color value.
Brightness	Press the cursor ◄► button to adjust the display brightness.
Contrast	Press the cursor ◄► button to adjust the display contrast.
Sharpness	Press the cursor ◄► button to adjust the display sharpness level.
Gamma	Press the cursor ◄► button to adjust the gamma correction of the display.
Advanced	Press ↵ (Enter) / ► to enter the Advanced menu. See *Advanced Feature* on page 23.
Reset	Press ↵ (Enter) / ► to reset all settings to default values.

Advanced Feature

Press the **Menu** button to open the **OSD** menu. Press ◄► to move to the **Image** menu. Press ▼▲ to move to the **Advanced** menu and then press **Enter** or ►. Press ▼▲ to move up and down in the **Advanced** menu.

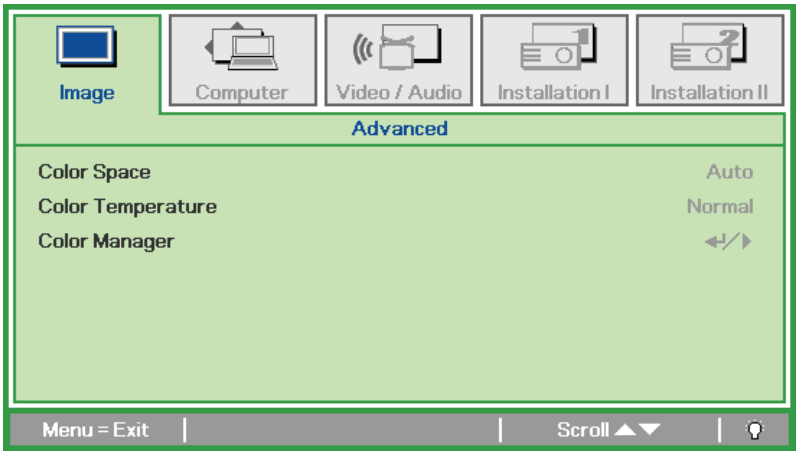

ITEM	DESCRIPTION
Color Space	Press the cursor ◄► button to adjust the color space. (Range: Auto – RGB – YPbPr – YCbCr)
Color Temperature	Press the cursor ◄► button to adjust the color temperature. (Range: Cold – Normal – Warm)
Color Manager	Press ↵ (Enter) / ► to enter the color manager menu. (Range: Red-Green-Blue-Cyan-Magenta-Yellow-White). See page 24 for more information on Color Manager.

Color Manager

Press ↵ (Enter) / ► to enter the **Color Manager** sub menu.

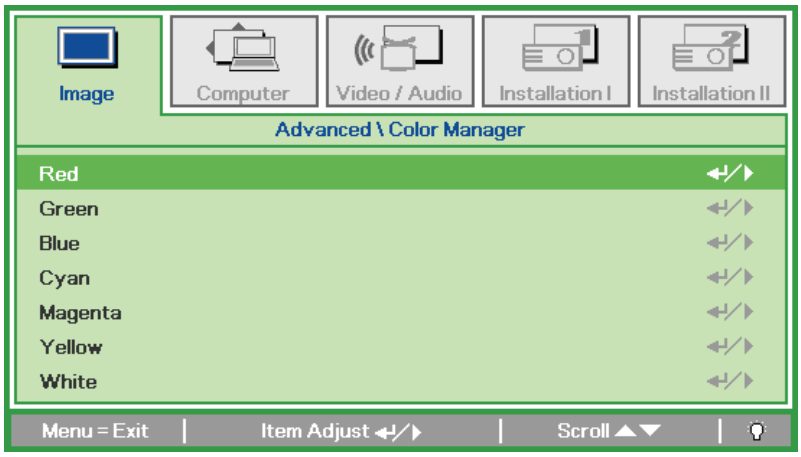

ITEM	DESCRIPTION
Red	Select to enter the Red Color Manager. Press the ◄► buttons to adjust the Hue, Saturation, and Gain.
Green	Select to enter the Green Color Manager. Press the ◄► buttons to adjust the Hue, Saturation, and Gain.
Blue	Select to enter the Blue Color Manager. Press the ◄► buttons to adjust the Hue, Saturation, and Gain.
Cyan	Select to enter the Cyan Color Manager. Press the ◄► buttons to adjust the Hue, Saturation, and Gain.
Magenta	Select to enter the Magenta Color Manager. Press the ◄► buttons to adjust the Hue, Saturation, and Gain.
Yellow	Select to enter the Yellow Color Manager. Press the◄► buttons to adjust the Hue, Saturation, and Gain.
White	Select to enter the White Color Manager. Press the ◄► buttons to adjust the Red, Green, and Blue.

Computer Menu

Press the **MENU** button to open the **OSD** menu. Press the cursor ◄► button to move to the **Computer** menu. Press the cursor ▲▼ button to move up and down in the computer menu. Press ◄► to change values for settings.

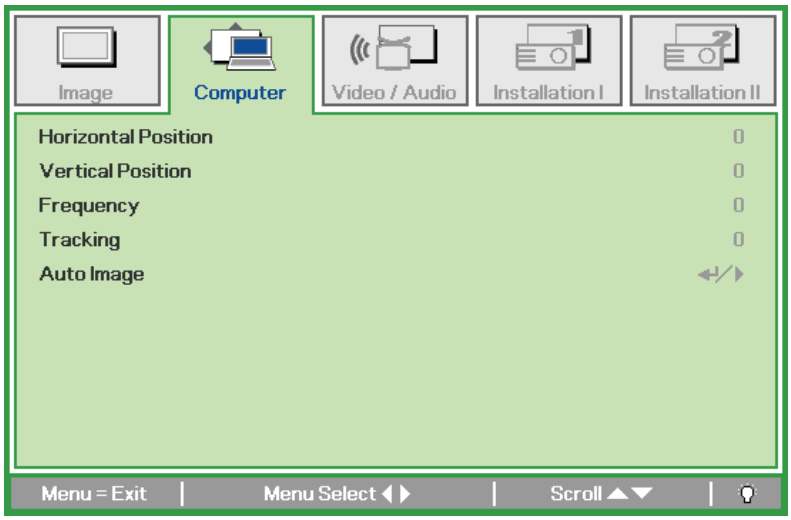

ITEM	DESCRIPTION
Horizontal Position	Press the cursor ◄► button to adjust the display position to left or right.
Vertical Position	Press the cursor ◄► button to adjust the display position to up or down.
Frequency	Press the cursor ◄► button to adjust the A/D sampling clock.
Tracking	Press the cursor ◄► button to adjust the A/D sampling dot.
Auto Image	Press ↵ (Enter) / ► to automatically adjustment for phase, tracking, size and position.

Video/Audio Menu

Press the **MENU** button to open the **OSD** menu. Press the cursor ◄► button to move to the **Video/Audio** menu. Press the cursor ▲▼ button to move up and down in the **Video/Audio** menu. Press ◄► to change values for settings.

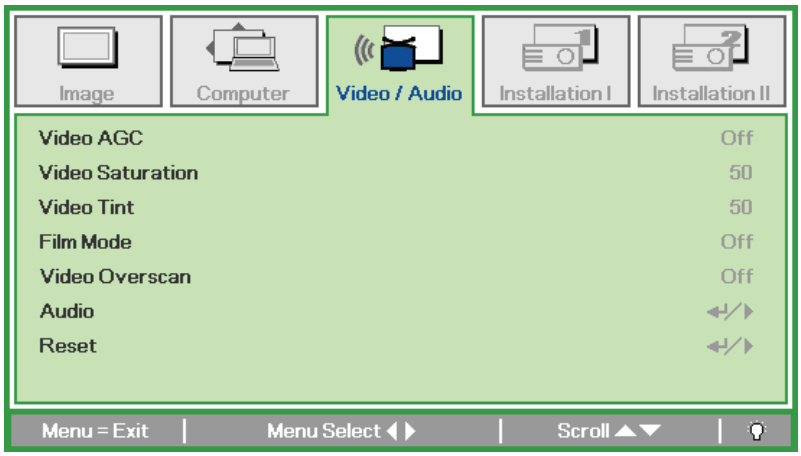

ITEM	DESCRIPTION
Video AGC	Press the ◄► buttons to enable or disable the Automatic Gain Control for video source.
Video Saturation	Press the ◄► buttons to adjust the video saturation.
Video Tint	Press the ◄► buttons to adjust the video tint/hue.
Film Mode	Press the ◄► buttons to select a different film mode.
Video Overscan	Press the ◄► buttons to enable or disable video over scan.
Audio	Press ↵ (Enter) / ► to enter the Audio menu. See *Audio* on page 27.
Reset	Press ↵ (Enter) / ► to reset all settings to default values.

Note:
Video jagging may occur when playing interlace video. To overcome this issue, open the Video / Audio menu and adjust the Film Mode feature.

Audio

Press ↵ (Enter) / ► to enter the **Audio** sub menu.

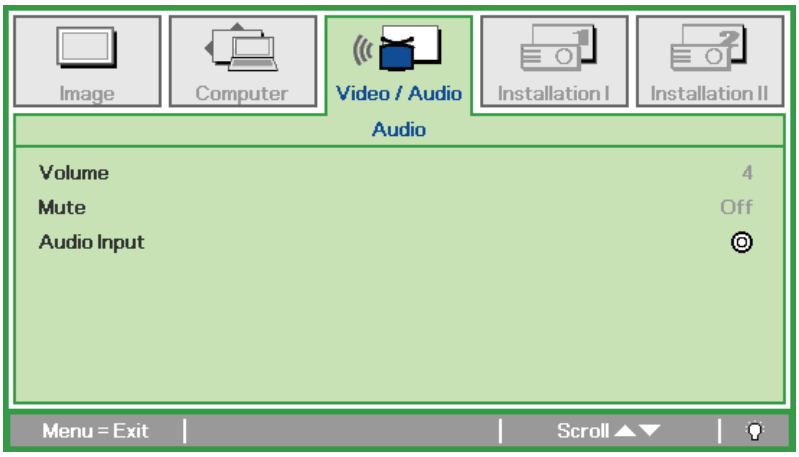

ITEM	DESCRIPTION
Volume	Press the ◄► buttons to adjust the audio volume. (Range: 0 ~ 8)
Mute	Press the ◄► buttons to turn on or off the speaker.
Audio Input	Press the cursor ◄► button to select audio input. (Range: Mini ~ RCA)

Installation I Menu

Press the **MENU** button to open the **OSD** menu. Press the cursor ◄► button to move to the **Installation I** menu. Press the cursor ▲▼ button to move up and down in the **Installation I** menu. Press ◄► to change values for settings.

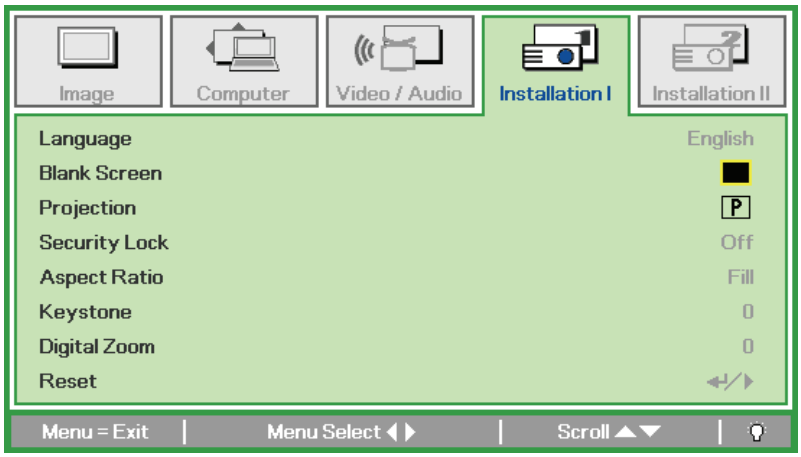

ITEM	DESCRIPTION
Language	Press the cursor ◄► button to select a different localization Menu.
Blank Screen	Press the cursor ◄► button to select different color to blank the screen.
Projection	Press the cursor ◄► button to choose from four projection methods:
Security Lock	Press the cursor ◄► button to enable or disable security lock function.
Aspect Ratio	Press the cursor ◄► button to adjust the video aspect ratio.
Keystone	Press the cursor ◄► button to adjust the display keystone.
Digital Zoom	Press the cursor ◄► button to adjust the Digital Zoom menu.
Reset	Press ↵ (Enter) / ► to reset all settings to default values (except Language and Security Lock).

Installation II Menu

Press the **MENU** button to open the **OSD** menu. Press the cursor ◄► button to move to the **Installation II** menu. Press the cursor ▲▼ button to move up and down in the Installation II menu.

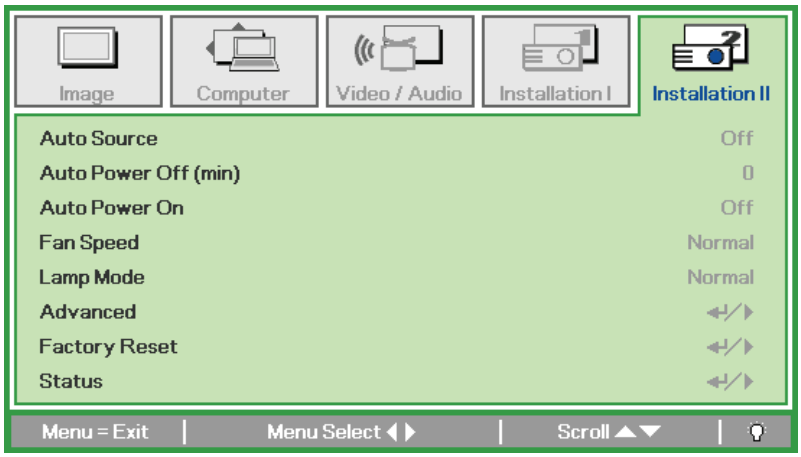

ITEM	DESCRIPTION
Auto Source	Press the cursor ◄► button to enable or disable automatic source detection.
Auto Power Off (min.)	Press the cursor ◄► button to enable or disable automatic shutdown of lamp when no signal.
Auto Power On	Press the cursor ◄► button to enable or disable automatic power On when AC power is supplied.
Fan Speed	Press the cursor ◄► button to toggle between Normal and High fan speeds. **Note**: We recommend selecting high speed in high temperatures, high humidity, or high altitude areas.
Lamp Mode	Press the cursor ◄► button to select the lamp mode for higher brightness or lower brightness to save lamp life.
Advanced	Press ↵ (Enter) / ► to enter the Advanced menu. See *Advanced Feature* on page 30.
Factory Reset	Press ↵ (Enter) / ► to reset all items to factory preset values.
Status	Press ↵ (Enter) / ► to enter the Status menu. See page 38 for more information on Status.

Advanced Feature

Press the **Menu** button to open the **OSD** menu. Press ◄► to move to the **Installation II** menu. Press ▲▼ to move to the **Advanced** menu and then press **Enter** or ►. Press ▲▼ to move up and down in the **Advanced** menu. Press ◄► to change values for setting.

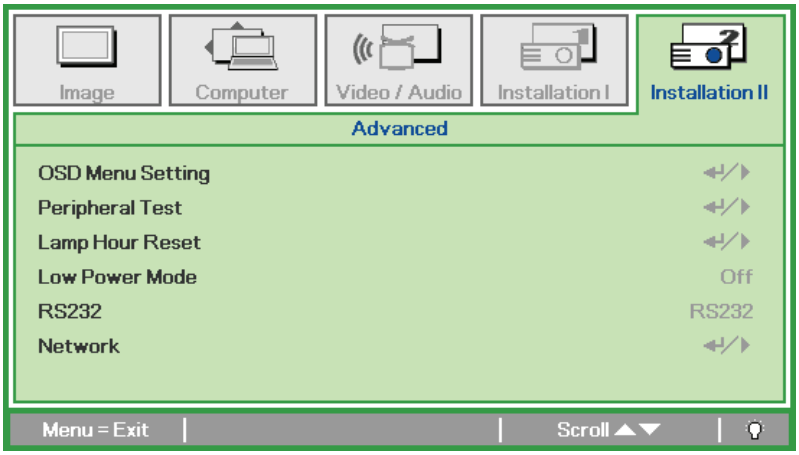

ITEM	DESCRIPTION
OSD Menu Setting	Press ↵ (Enter) / ► to enter the OSD setting menu. See page 31 for more information on OSD Menu Setting.
Peripheral Test	Press ↵ (Enter) / ► to enter the Peripheral Test menu. See page 31 for more information on Peripheral Test.
Lamp Hour Reset	After replacing the lamp, this item should be reset. See page 32 for more information on Lamp Hour Reset.
Low Power Mode	Press ◄► to turn Low Power Mode on or off.
RS232	Press ◄► to select RS232 (remote) or Network (LAN) mode depending on projector connection method.
Network	Press ↵ (Enter) / ► to enter the Network menu. See page 32 for more information on Network settings.

OSD Menu Setting

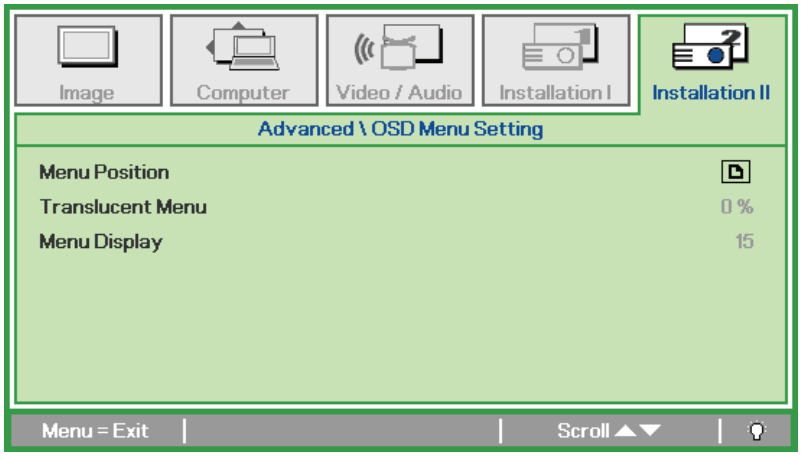

ITEM	DESCRIPTION
Menu Position	Press ◀▶ button to select different OSD location.
Translucent Menu	Press ◀▶ button to select OSD background translucent level.
Menu Display	Press ◀▶ button to select OSD timeout delay.

Peripheral Test

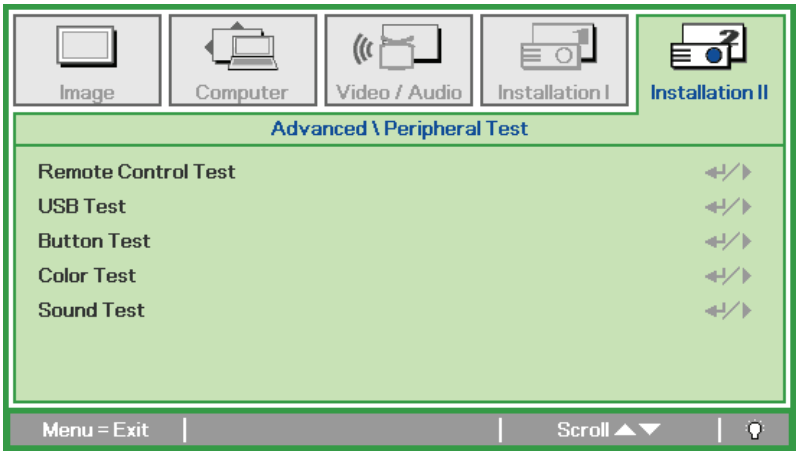

ITEM	DESCRIPTION
Remote Control Test	Press ↵ (Enter) / ▶ to test the IR remote controller for diagnostic.
USB Test	Press ↵ (Enter) / ▶ to test the USB connection with connected PC.
Button Test	Press ↵ (Enter) / ▶ to test the button on keypad.
Color Test	Press ↵ (Enter) / ▶ to select different colors on screen.
Sound Test	Press ↵ (Enter) / ▶ to test sound output.

Lamp Hour Reset

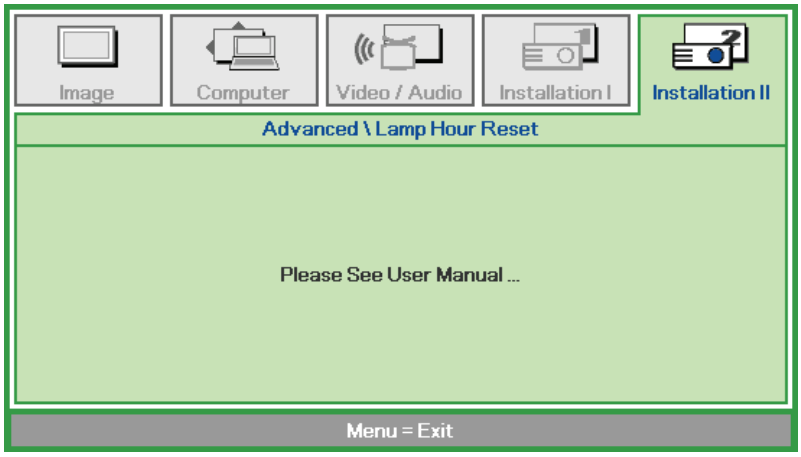

Please refer to *Resetting the Lamp* on page 41 to reset the lamp hour counter.

Network

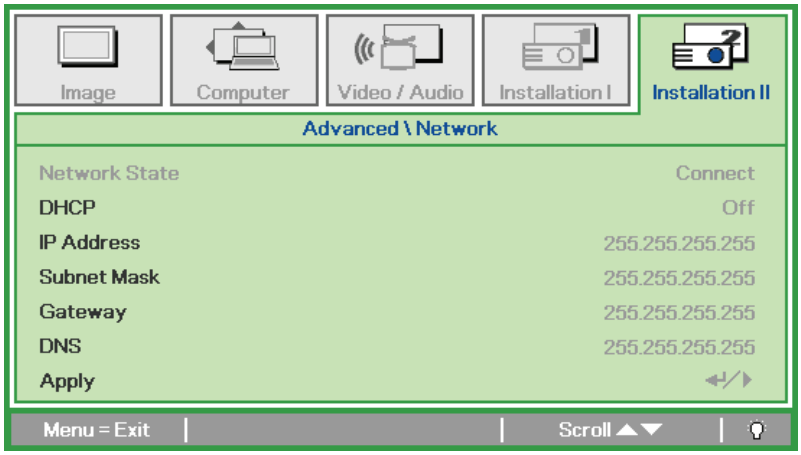

ITEM	DESCRIPTION
Network State	Displays the network connection status.
DHCP	Press ◄► to turn DHCP On or Off. **Note:** If you select DHCP Off, complete the IP Address, Subnet Mask, Gateway, and DNS fields.
IP Address	Enter a valid IP address if DHCP is turned off.
Subnet Mask	Enter a valid Subnet Mask if DHCP is turned off.
Gateway	Enter a valid Gateway address if DHCP is turned off.
DNS	Enter a valid DNS name if DHCP is turned off.
Apply	Press ↵ (Enter) / ► to confirm settings.

For simplicity and ease of operation, the projector provides diverse networking and remote management features.

The LAN/RJ45 function of the projector through a network, such as remotely manage: Power On/Off, Brightness and Contrast settings. Also, projector status information, such as: Video-Source, Sound-Mute, etc.

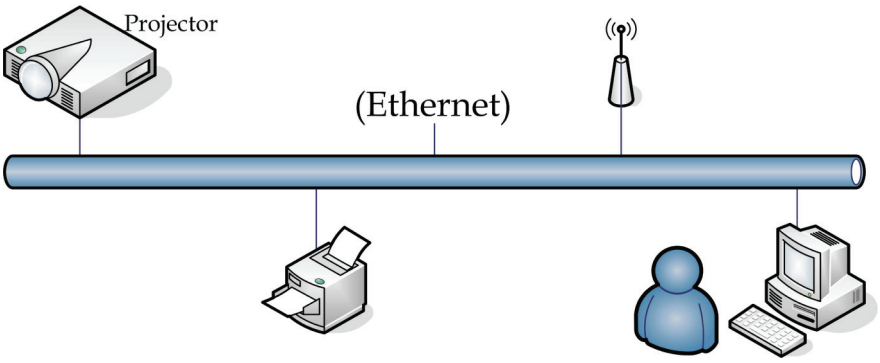

LAN_RJ45

1. Connect an RJ45 cable to RJ45 ports on the projector and the PC (Laptop).

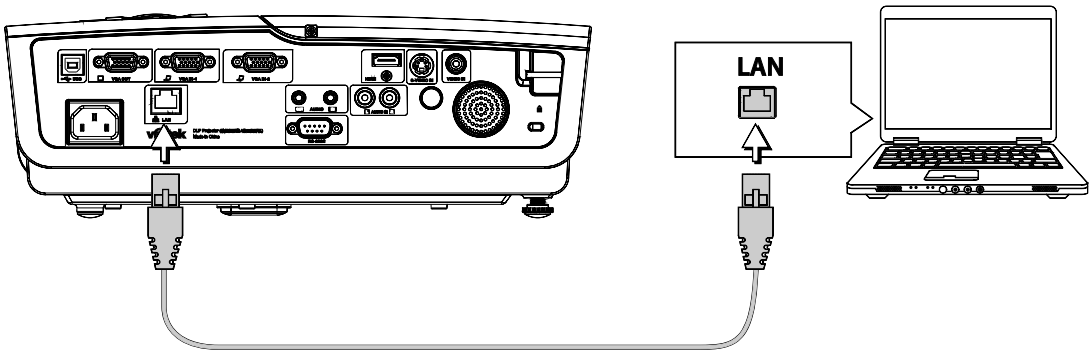

2. On the PC (Laptop), select **Start** → **Control Panel** → **Network Connections**.

3. Right-click on **Local Area Connection**, and select **Properties**.

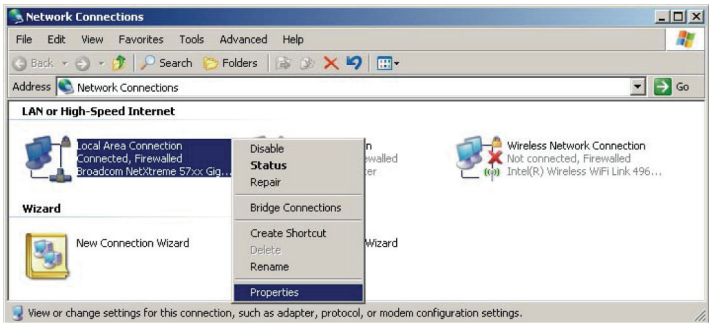

4. In the **Properties** window, select the **General** tab, and select **Internet Protocol (TCP/IP)**.
5. Click **Properties**.

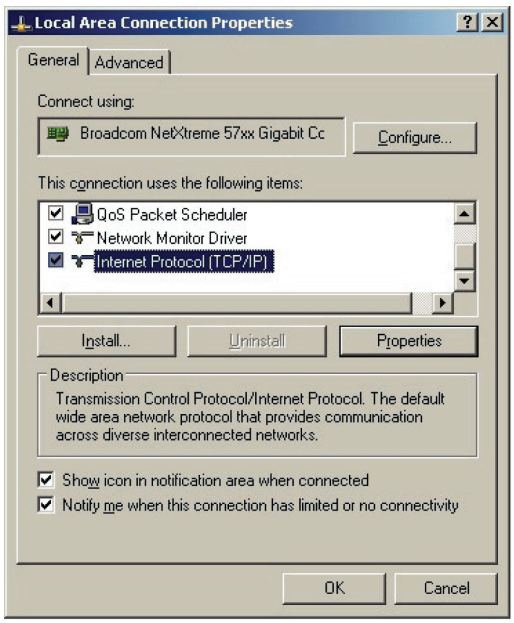

6. Click **Use the following IP address** and fill in the IP address and Subnet mask, then click **OK**.

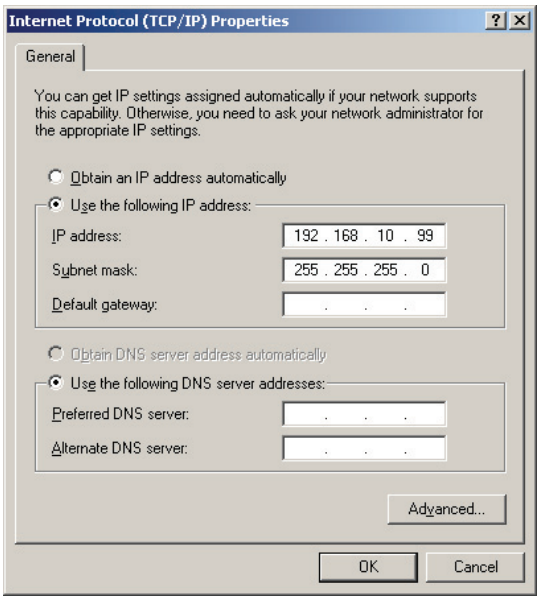

7. Press the **Menu** button on the projector.
8. Select **Installation II** → **Advanced** → **Network**.
9. After getting into **Network**, input the following:
   - DHCP: Off
   - IP Address: 192.168.10.10
   - Subnet Mask: 255.255.255.0
   - Gateway: 0.0.0.0
   - DNS Server: 0.0.0.0
10. Press ↵ (Enter) / ► to confirm settings.
11. Open a web browser (for example, Microsoft Internet Explorer).

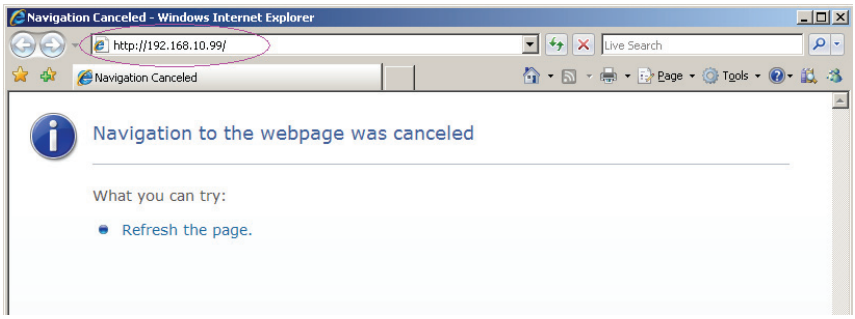

12. In the Address bar, input the IP address: 192.168.10.10.
13. Press ↵ (Enter) / ►.

The projector is setup for remote management. The LAN/RJ45 function displays as follows.

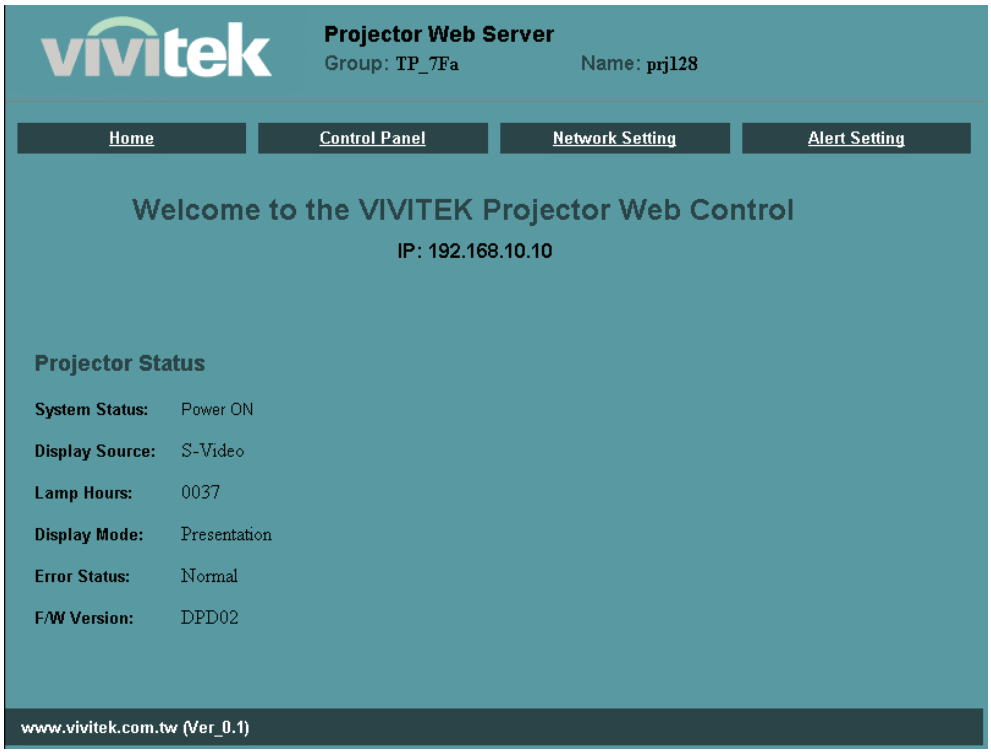

14. Click **Control Panel** to display projector settings.

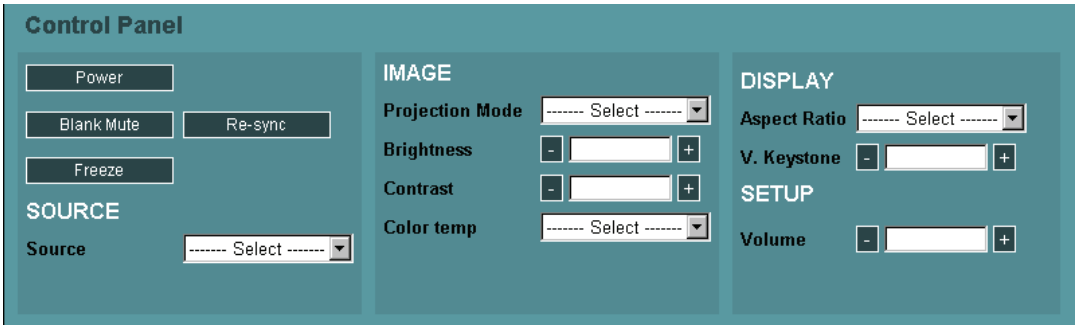

Preparing Email Alerts

1. Make sure that user can access the homepage of LAN RJ45 function by web browser (for example, Microsoft Internet Explorer v6.01/v7.0).
2. From the Homepage of LAN/RJ45, click **Alert Setting**.

3. By default, these input boxes in **Alert Setting** are blank.

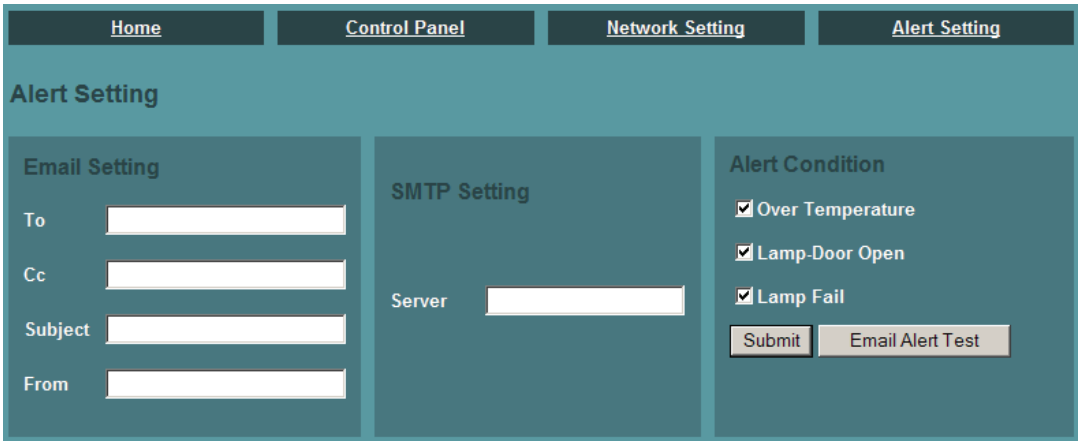

4. The **To** field is the recipients email address (for example, projector administrator). This is a required field.
   The **Cc** field sends a carbon copy of the alert to the specified email address. This is an optional field (for example, assistant of projector administrator). This **Cc** field is optional input.
   The "Subject" field is the subtitle for email. This is a required field.
   The **From** field is the sender's email address (for example, projector administrator). This is a required field.
   The **SMTP** field is the mail server for sending out email (SMTP protocol).
   This is a required field.
   Select the alerting conditions by checking the desired boxes.
   See the example below:

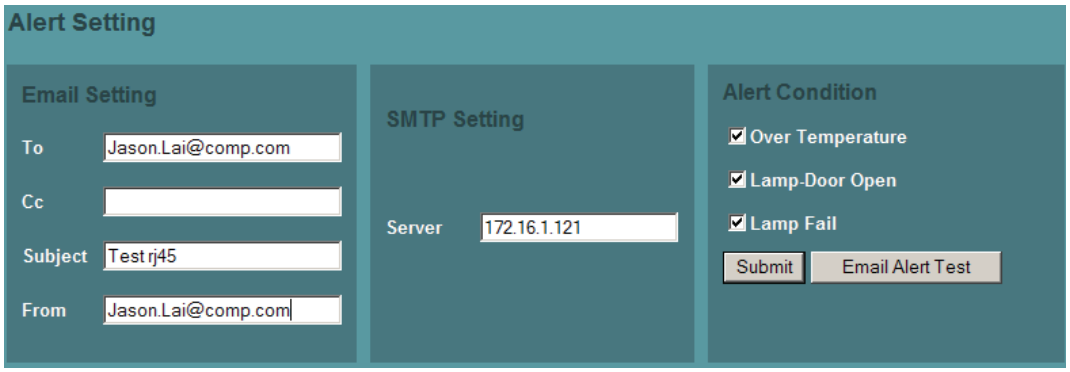

5. When the above necessary input fields correct, then press **Email Alert Test** button.
   In a few seconds, the specified mailbox receives a test email as shown below:

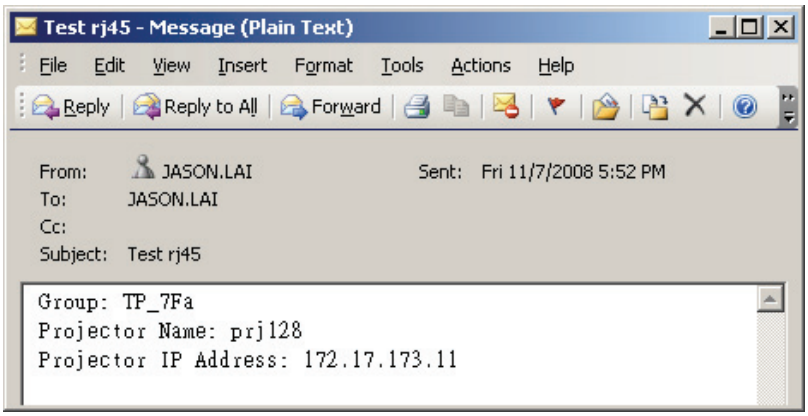

> ***Note:***
> *Fill in all fields as specified. Select the desired alert condition and click* ***Submit*** *to conduct an* ***Email Alert Test****. A successful test alerts the designated email accounts.*
> *To create an email alert, you must select alert conditions and enter a correct email address.*

Group and **Projector Name** identify the alerting projector and are located at the top of the LAN RJ45 web page as shown below:

Factory Reset

Press the cursor ▲▼ button to move up and down in the **Installation II** menu. Select the **Factory Reset** sub menu and press ↵ (Enter) / ► to reset all the menu items to the factory default values (expect Language and Security Lock).

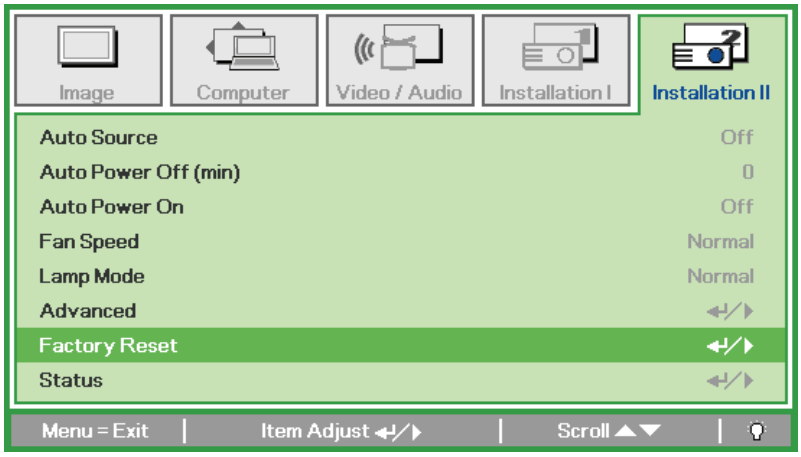

Status

Press the cursor ▲▼ button to move up and down in the **Installation II** menu. Select the **Installation II** sub menu and press ↵ (Enter) / ► to enter the **Status** sub menu.

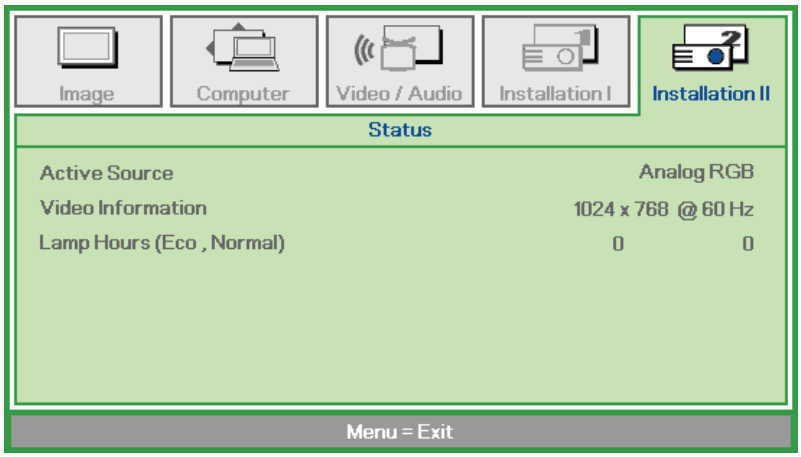

ITEM	DESCRIPTION
Active Source	Display the activated source.
Video Information	Displays resolution/video information for RGB source and color standard for Video source.
Lamp Hours	Lamp hour used information is displayed. Eco and Normal counters are separated.

MAINTENANCE AND SECURITY

Replacing the Projection Lamp

The projection lamp should be replaced when it burns out. It should only be replaced with a certified replacement part, which you can order from your local dealer.

Important:
a. *The projection lamp used in this product contains a small amount of mercury.*

b. *Do not dispose this product with general household waste.*

c. *Disposal of this product must be carried out in accordance with the regulations of your local authority.*

Warning:
Be sure to turn off and unplug the projector at least 30 minutes before replacing the lamp. Failure to do so could result in a severe burn.

1. Remove the single screw on the lamp compartment cover.

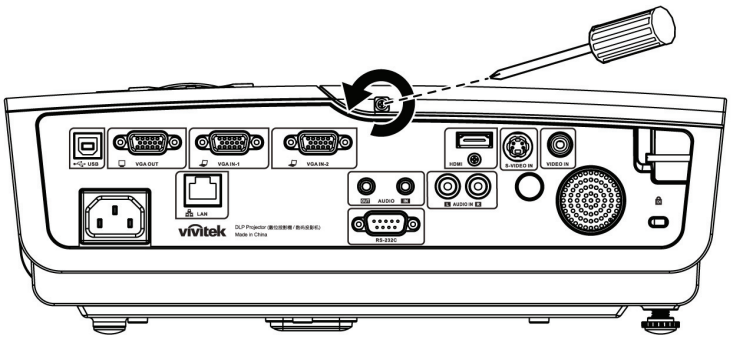

2. Remove the lamp compartment cover.

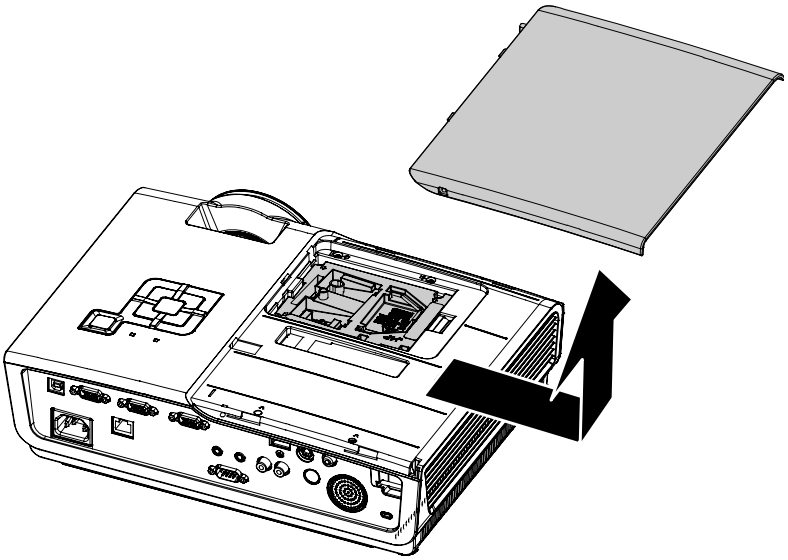

3. Remove the three screws from the lamp module.

4. Lift the module handle up.

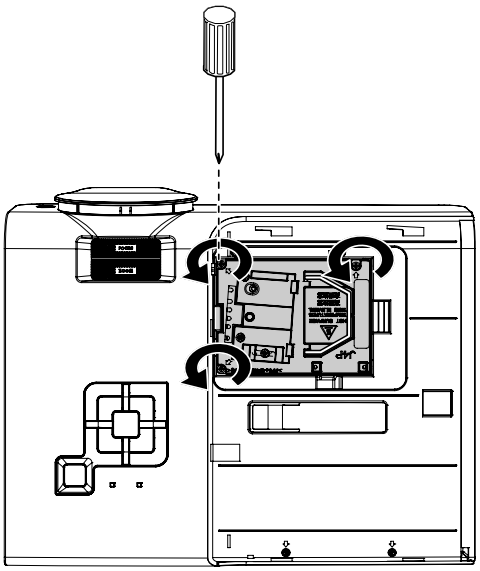

5. Pull firmly on the module handle to remove the lamp module.

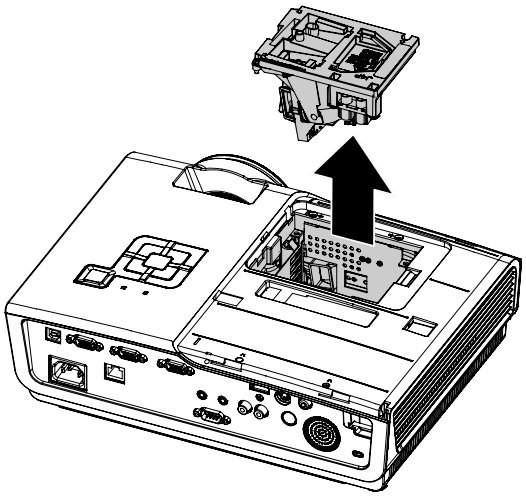

6. Reverse steps 1 to 5 to install the new lamp module. While installing, align the lamp module with the connector and ensure it is level to avoid damage.

Note: The lamp module must sit securely in place and the lamp connector must be connected properly before tightening the screws.

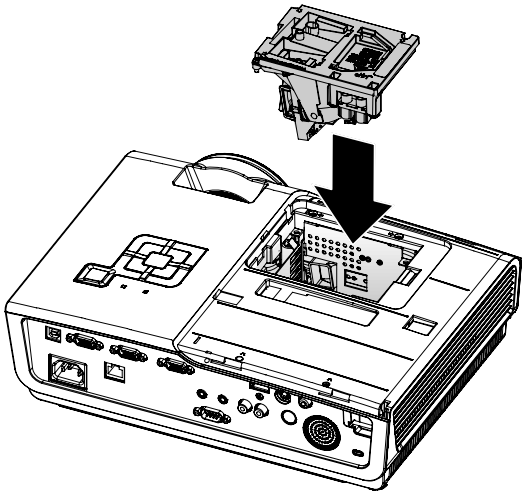

Resetting the Lamp

After replacing the lamp, you should reset the lamp hour counter to zero. Refer to the following:

1. Press the **MENU** button to open the OSD menu.

2. Press the cursor ◄► button to move to the **Installation II** menu. Press the cursor button to move down to **Advanced**.

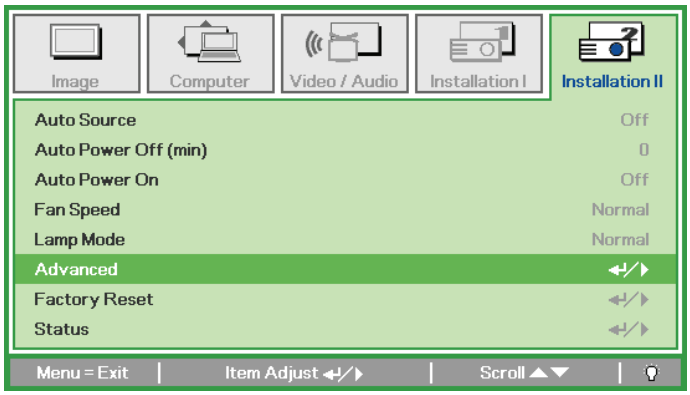

3. Press the cursor ▼▲ button to move down to **Lamp Hour Reset**.

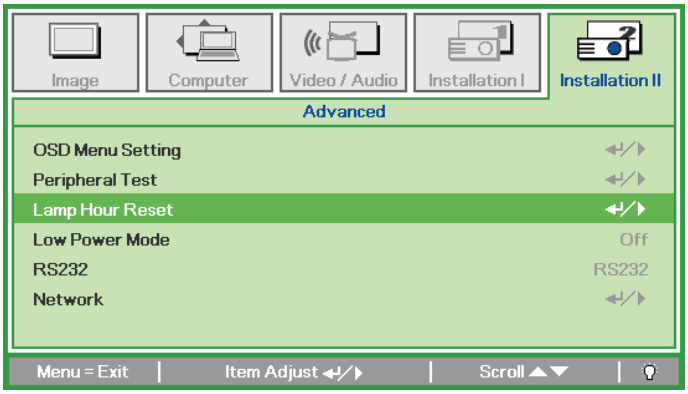

4. Press the cursor ► or Enter button.

   A message screen appears.

5. Press ▼▲◄► buttons to reset the lamp hour.

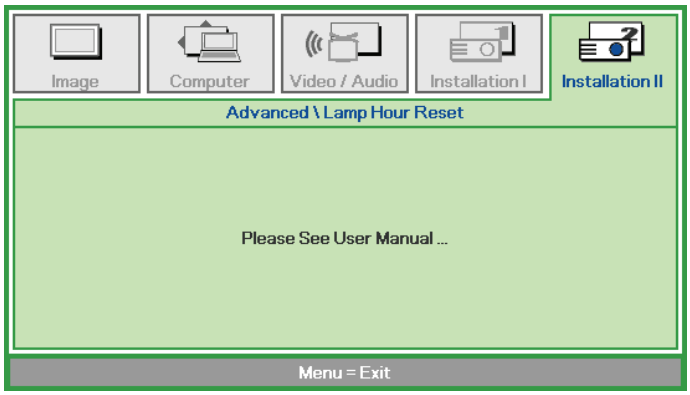

6. Press the **MENU** button to get back to Installation II.

Cleaning the Projector

Cleaning the projector to remove dust and grime will help ensure trouble-free operation.

Warning:
1. *Be sure to turn off and unplug the projector at least 30 minutes before cleaning. Failure to do so could result in a severe burn.*

2. *Use only a dampened cloth when cleaning. Do not allow water to enter the ventilation openings on the projector.*

3. *If a little water gets into the projector interior while cleaning, leave unplugged in a well-ventilated room for several hours before using.*

4. *If a lot of water gets into the projector interior when cleaning, have the projector serviced.*

Cleaning the Lens

You can purchase optic lens cleaner from most camera stores. Refer to the following to clean the projector lens.

1. Apply a little optic lens cleaner to a clean soft cloth. (Do not apply the cleaner directly to the lens.)
2. Lightly wipe the lens in a circular motion.

Caution:
1. *Do not use abrasive cleaners or solvents.*

2. *To prevent discoloration or fading, avoid getting cleaner on the projector case.*

Cleaning the Case

Refer to the following to clean the projector case.

1. Wipe off dust with a clean dampened cloth.
2. Moisten the cloth with warm water and mild detergent (such as used to wash dishes), and then wipe the case.
3. Rinse all detergent from the cloth and wipe the projector again.

Caution:
To prevent discoloration or fading of the case, do not use abrasive alcohol-based cleaners.

Using the Kensington® Lock

If you are concerned about security, attach the projector to a permanent object with the Kensington slot and a security cable.

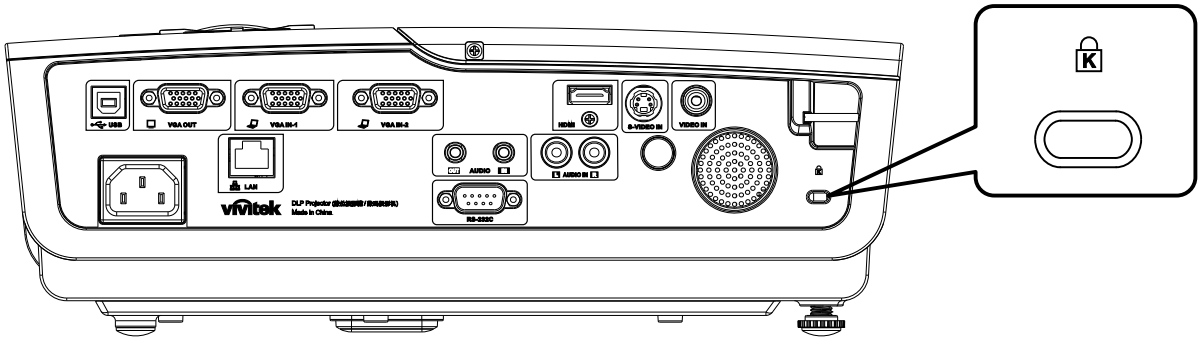

Note:
Contact your vendor for details on purchasing a suitable Kensington security cable.

The security lock corresponds to Kensington's MicroSaver Security System. If you have any comment, contact: Kensington, 2853 Campus Drive, San Mateo, CA 94403, U.S.A. Tel: 800-535-4242, http://www.Kensington.com.

Common problems and solutions

These guidelines provide tips to deal with problems you may encounter while using the projector. If the problem remains unsolved, contact your dealer for assistance.

Often after time spent troubleshooting, the problem is traced to something as simple as a loose connection. Check the following before proceeding to the problem-specific solutions.

- *Use some other electrical device to confirm that the electrical outlet is working.*
- *Ensure the projector is turned on.*
- *Ensure all connections are securely attached.*
- *Ensure the attached device is turned on.*
- *Ensure a connected PC is not in suspending mode.*
- *Ensure a connected notebook computer is configured for an external display.*
  (This is usually done by pressing a Fn-key combination on the notebook).

Tips for Troubleshooting

In each problem-specific section, try the steps in the order suggested. This may help you to solve the problem more quickly.

Try to pin point the problem and thus avoid replacing non-defective parts.
For example, if you replace batteries and the problem remains, put the original batteries back and go to the next step.

Keep a record of the steps you take when troubleshooting: The information may be useful when calling for technical support or for passing on to service personnel.

LED Error Messages

Error Code Messages	Power LED Blink	Ready LED Blink	Temp LED Blink
Over temperature	OFF	OFF	ON
G794 fail	4	4	OFF
T1 fail	4	5	OFF
Lamp error	5	OFF	OFF
Ballast Over Temperature	5	1	OFF
Ballast shot circuit in output detected	5	2	OFF
End of lamp lift detected	5	3	OFF
Ballast lamp did not ignite	5	4	OFF
Lamp extinguished during normal operation	5	5	OFF
Lamp extinguished during run-up phase	5	6	OFF
Lamp Memory write error	5	7	OFF
Lamp Memory write buffer overflow	5	8	OFF
Lamp UART buffer overflow	5	9	OFF
Lamp current calculation error	5	10	OFF
Lamp Corrupted software configuration	5	11	OFF
Lamp voltage too low	5	12	OFF
Lamp FLASH memory CRC error	5	13	OFF
Lamp EEPROM memory CRC error	5	14	OFF
Lamp EEPROM configuration does not match FLASH kernel	5	15	OFF
Fan1 error (Burner Fan)	6	1	OFF
Fan2 error (Lamp Fan)	6	2	OFF
Fan3 error (Power Fan)	6	3	OFF
Fan4 error (DMD Fan)	6	4	OFF
Lamp door open	7	OFF	OFF
DMD error	8	OFF	OFF
Color wheel error	9	OFF	OFF

In the event of an error, please disconnect the AC power cord and wait for one (1) minute before re-starting the projector. If the POWER or LAMP LEDs are still blinking or the TEMP LED is lit, contact your service center.

Image Problems

Problem: No image appears on the screen

1. Verify the settings on your notebook or desktop PC.
2. Turn off all equipment and power up again in the correct order.

Problem: The image is blurred

1. Adjust the **Focus** on the projector.
2. Press the **Auto** button on the remote control or projector.

3. Ensure the projector-to-screen distance is within the 10-meter (33-feet) specified range.
4. Check that the projector lens is clean.

Problem: The image is wider at the top or bottom (trapezoid effect)

1. Position the projector so it is as perpendicular to the screen as possible.
2. Use the **Keystone** button on the remote control or projector to correct the problem.

Problem: The image is reversed

Check the **Projection** setting on the **Installation I** menu of the OSD.

Problem: The image is streaked

1. Set the **Frequency** and **Tracking** settings on the **Computer** menu of the OSD to the default settings.
2. To ensure the problem is not caused by a connected PC's video card, connect to another computer.

Problem: The image is flat with no contrast

Adjust the **Contrast** setting on the **Image** menu of the OSD.

Problem: The color of the projected image does not match the source image.

Adjust the **Color Temperature** and **Gamma** settings on the **Image** menu of the OSD.

Lamp Problems

Problem: There is no light from the projector

1. Check that the power cable is securely connected.
2. Ensure the power source is good by testing with another electrical device.
3. Restart the projector in the correct order and check that the Power LED is green.
4. If you have replaced the lamp recently, try resetting the lamp connections.
5. Replace the lamp module.
6. Put the old lamp back in the projector and have the projector serviced.

Problem: The lamp goes off

1. Power surges can cause the lamp to turn off. Re-plug power cord. When the READY LED is on, press the power button.
2. Replace the lamp module.
3. Put the old lamp back in the projector and have the projector serviced.

Remote Control Problems

Problem: The projector does not respond to the remote control

1. Direct the remote control towards remote sensor on the projector.
2. Ensure the path between remote and sensor is not obstructed.
3. Turn off any fluorescent lights in the room.
4. Check the battery polarity.
5. Replace the batteries.
6. Turn off other Infrared-enabled devices in the vicinity.
7. Have the remote control serviced.

Audio Problems

Problem: There is no sound

1. Adjust the volume on the remote control.
2. Adjust the volume of the audio source.
3. Check the audio cable connection.
4. Test the source audio output with other speakers.
5. Have the projector serviced.

Problem: The sound is distorted

1. Check the audio cable connection.
2. Test the source audio output with other speakers.
3. Have the projector serviced.

Having the Projector Serviced

If you are unable to solve the problem, you should have the projector serviced. Pack the projector in the original carton. Include a description of the problem and a checklist of the steps you took when trying to fix the problem: The information may be useful to service personnel. For servicing, return the projector to the place you purchased it.

Specifications

Model	D935VX	D940VX/D945VX	D930TX
Display type	TI DMD 0.55" XGA	TI DMD 0.7" XGA	TI DMD 0.55" XGA
Resolution	XGA 1024x768 Native	XGA 1024x768 Native	XGA 1024x768 Native
Weight	3.5 kg (7.7 lbs)		3.6 kg (7.9 lbs)
Projection distance	1 meters ~ 10 meters	1 meters ~ 10 meters	0.5 meters ~ 5 meters
Projection screen size	22.5"~300"	23.4"~300"	38"~380"
Projection lens	Manual Focus/Manual Zoom		Manual Focus
Zoom ratio	1.15		–
Vertical keystone correction	+/- 15 degrees		
Projection methods	Front, Rear, Desktop/Ceiling (Rear, Front)		
Data compatibility	IBM PC or compatibles (VGA, SVGA, XGA, SXGA, UXGA), Mac		
SDTV/EDTV/ HDTV	480i, 576i, 480p, 576p, 720p, 1080i, 1080p		
Video compatibility	NTSC/NTSC 4.43, PAL (B/G/H/I/M/N/60), SECAM		
H-Sync	15, 30 – 80 kHz		
V-Sync	43 – 87 Hz		
Safety certification	FCC-B, UL, cUL, CB, CE, CCC, EK, PCT, PSB		
Operation temperature	5° ~ 35°C		
Dimensions	335 mm (W) x 102 mm (H) x 256 mm (D)		
AC Input	AC Universal 100 ~ 240, Typical @ 110VAC (100~240)/+-10%		
Power consumption	290W	350W	
Stand By	<1 watt		
Lamp	230W	280W	
Audio speaker	3W mono speaker		
Input Terminals	VGA x 2		
	S-Video x 1		
	Composite Video x 1		
	HDMI 1.3 x 1		
	RCA stereo x 1		
	Mini-jack stereo x 1		
Output Terminals	VGA x 1 (Loop Thru only for VGA IN-1)		
	Mini-jack stereo x 1		
Control Terminals	RS-232C		
	RJ45		
	USB (type B)		
Security	Kensington lock		

Projection Distance vs. Projection Size

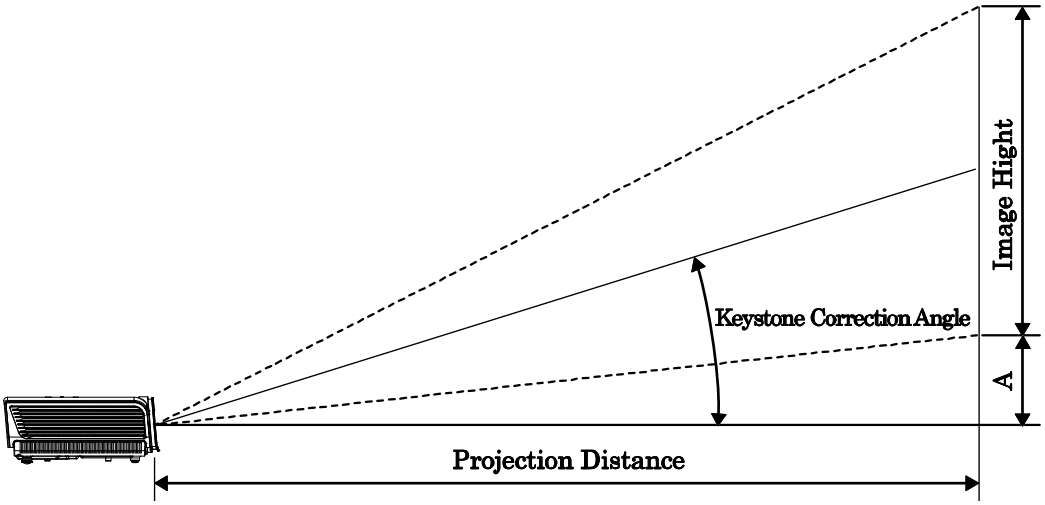

D9 SERIES Projection Distance and Size Table

D935VX	TELE				WIDE			
Distance (m)	1.34	3.58	4.47	8.94	1.54	3.09	3.86	11.58
Diagonal (inches)	30	80	100	200	40	80	100	300
Keystone (degree)	12.3	12.3	12.3	12.3	14.2	14.2	14.2	14.2
Image Height (mm)	457.2	1219.2	1524	3048	609.6	1219.2	1524	4572
Image Width (mm)	609.6	1625.6	2032	4064	812.8	1625.6	2032	6096
A (mm)	64	170.7	213.4	426.7	85.3	170.7	213.4	640.1

D940VX/D945VX	TELE				WIDE			
Distance (m)	1.28	3.41	4.27	8.53	1.46	2.93	3.66	10.97
Diagonal (inches)	30	80	100	200	40	80	100	300
Keystone (degree)	12.55	12.55	12.55	12.55	14.56	14.56	14.56	14.56
Image Height (mm)	457.2	1219.2	1524	3048	609.6	1219.2	1524	4572
Image Width (mm)	609.6	1625.6	2032	4064	812.8	1625.6	2032	6096
A (mm)	56.4	150.5	188.1	376.3	75.3	150.5	188.1	564.4

D930TX	TELE			
Distance (m)	0.53	1.05	1.32	3.95
Diagonal (inches)	40	80	100	300
Keystone (degree)	34.9	34.9	34.9	34.9
Image Height (mm)	609.6	1219.2	1524	4572
Image Width (mm)	812.8	1625.6	2032	6096
A (mm)	62.8	125.6	157	470.9

D9 SERIES Timing Mode Table

The projector can display several resolutions. The following table outlines the resolutions that can be displayed by the projector.

SIGNAL	RESOLUTION	H-SYNC (KHZ)	V-SYNC (HZ)	COMPOSITE / S-VIDEO	COMPONENT	RGB (ANALOG)	DVI/ HDMI (DIGITAL)
NTSC	—	15.734	60.0	O	—	–	–
PAL/SECAM	—	15.625	50.0	O	—	–	–
VESA	720 x 400	37.9	85.0	—	—	O	O
	640 x 480	31.5	60.0	—	—	O	O
	640 x 480	37.9	72.8	—	—	O	O
	640 x 480	37.5	75.0	—	—	O	O
	640 x 480	43.3	85.0	—	—	O	O
	800 x 600	35.2	56.3	—	—	O	O
	800 x 600	37.9	60.3	—	—	O	O
	800 x 600	46.9	75.0	—	—	O	O
	800 x 600	48.1	72.2	—	—	O	O
	800 x 600	53.7	85.1	—	—	O	O
	1024 x 768	48.4	60.0	—	—	O	O
	1024 x 768	56.5	70.1	—	—	O	O
	1024 x 768	60.0	75.0	—	—	O	O
	1024 x 768	68.7	85.0	—	—	O	O
	1280 x 800	49.7	59.8	—	—	O	O
	1280 x 800	62.8	74.9	—	—	O	O
	1280 x 800	71.6	84.8	—	—	O	O
	1280 x 1024	64.0	60.0	—	—	O	O
	1280 x 1024	80.0	75.0	—	—	O	O
	1280 x 1024	91.1	85.0	—	—	O	O
	1400 x 1050	65.3	60.0	—	—	O	O
	1440 x 900	55.9	60.0	—	—	O	O
	1600 x1200	75.0	60	—	—	O	O
Apple Macintosh	640 x 480	35.0	66.7	—	—	O	O
	832 x 624	49.7	74.5	—	—	O	O
	1024 x 768	60.2	74.9	—	—	O	O
	1152 x 870	68.7	75.1	—	—	O	O
SDTV	480i	15.734	60.0	—	O	—	O
	576i	15.625	50.0	—	O	—	O
EDTV	576p	31.3	50.0	—	O	—	O
	480p	31.5	60.0	—	O	—	O

SIGNAL	RESOLUTION	H-SYNC (KHZ)	V-SYNC (HZ)	COMPOSITE / S-VIDEO	COMPONENT	RGB (ANALOG)	DVI/ HDMI (DIGITAL)
HDTV	720p	37.5	50.0	—	O	—	O
	720p	45.0	60.0	—	O	—	O
	1080i	33.8	60.0	—	O	—	O
	1080i	28.1	50.0	—	O	—	O
	1080p	67.5	60.0	—	O	—	O
	1080p	56.3	50.0	—	O	—	O

O: Frequency supported

—: Frequency not supported

The resolution of the panel for the D9 Series is 1024 x 768. Resolution other than native resolution may display with uneven size of text or lines.

Projector Dimensions

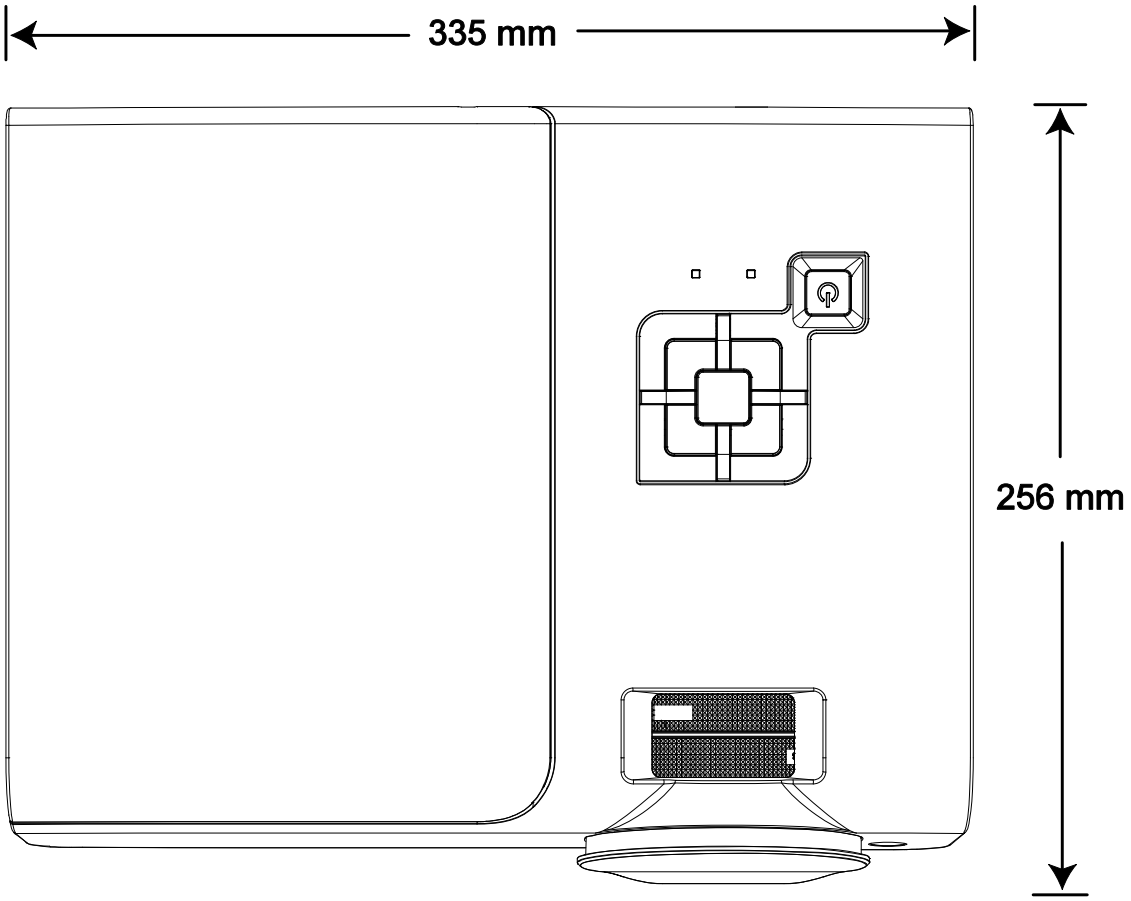

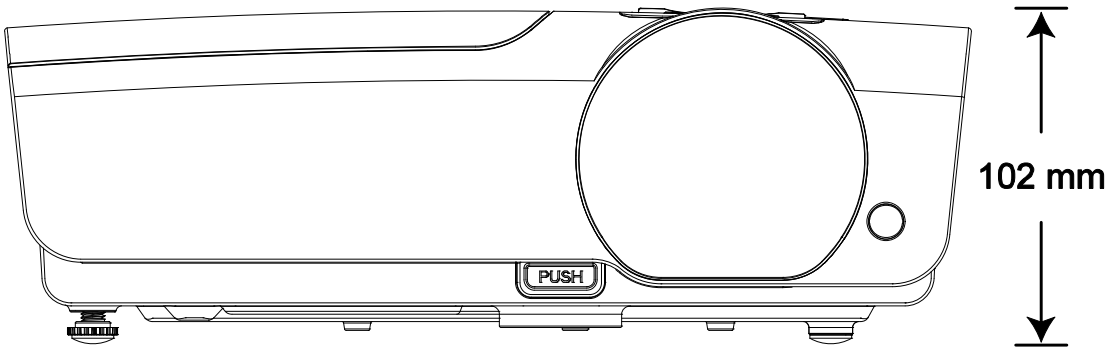

FCC Warning

This equipment has been tested and found to comply with the limits for a Class B digital device pursuant to Part 15 of the FCC Rules. These limits are designed to provide reasonable protection against harmful interference when the equipment is operated in a commercial environment.

This equipment generates, uses, and can radiate radio frequency energy and, if not installed and used in accordance with the instruction manual, may cause harmful interference to radio communications. Operation of this equipment in a residential area is likely to cause harmful interference in which case the user will be required to correct the interference at his/her own expense.

Changes or modifications not expressly approved by the parties responsible for compliance could void the user's authority to operate the equipment.

Canada

This class B digital apparatus complies with Canadian ICES-003.

Safety Certifications

FCC-B, UL, cUL, CB, CE, CCC, EK, PCT, and PSB

EN 55022 Warning

This is a Class B product. In a domestic environment, it may cause radio interference, in which case the user may be required to take adequate measures. The typical use is in a conference room, meeting room, or auditorium.