Copyright

This publication, including all photographs, illustrations and software, is protected under international copyright laws, with all rights reserved. Neither this manual, nor any of the material contained herein, may be reproduced without written consent of the author.

© Copyright 2012

Disclaimer

The information in this document is subject to change without notice. The manufacturer makes no representations or warranties with respect to the contents hereof and specifically disclaims any implied warranties of merchantability or fitness for any particular purpose. The manufacturer reserves the right to revise this publication and to make changes from time to time in the content hereof without obligation of the manufacturer to notify any person of such revision or changes.

Trademark Recognition

Kensington is a U.S. registered trademark of ACCO Brand Corporation with issued registrations and pending applications in other countries throughout the world.

HDMI™ HIGH-DEFINITION MULTIMEDIA INTERFACE HDMI, the HDMI Logo, and High-Definition Multimedia Interface are trademarks or registered trademarks of HDMI Licensing LLC in the United States and other countries.

All other product names used in this manual are the properties of their respective owners and are acknowledged.

Important Safety Information

> ***Important:***
> *It is strongly recommended that you read this section carefully before using the projector. These safety and usage instructions will ensure that you enjoy many years of safe use of the projector. Keep this manual for future reference.*

Symbols Used

Warning symbols are used on the unit and in this manual to alert you of hazardous situations.

The following styles are used in this manual to alert you to important information.

> ***Note:***
> *Provides additional information on the topic at hand.*

> ***Important:***
> *Provides additional information that should not be overlooked.*

> ***Caution:***
> *Alerts you to situations that may damage the unit.*

> ***Warning:***
> *Alerts you to situations that may damage the unit, create a hazardous environment, or cause personal injury.*

Throughout this manual, component parts and items in the OSD menus are denoted in bold font as in this example:
"Push the **Menu** button on the remote control to open the **Main** menu."

General Safety Information

- Do not open the unit case. Aside from the projection lamp, there are no user-serviceable parts in the unit. For servicing, contact qualified service personnel.
- Follow all warnings and cautions in this manual and on the unit case.
- The projection lamp is extremely bright by design. To avoid damage to eyes, do not look into the lens when the lamp is on.
- Do not place the unit on an unstable surface, cart, or stand.
- Avoid using the system near water, in direct sunlight, or near a heating device.
- Do not place heavy objects such as books or bags on the unit.

Projector Installation Notice

- Place the projector in a horizontal position
  The tilt angle of the projector should not exceed 15 degrees, nor should the projector be installed in any way other than the desktop and ceiling mount, otherwise lamp life could decrease dramatically.

- Allow at least 50 cm clearance around the exhaust vent.

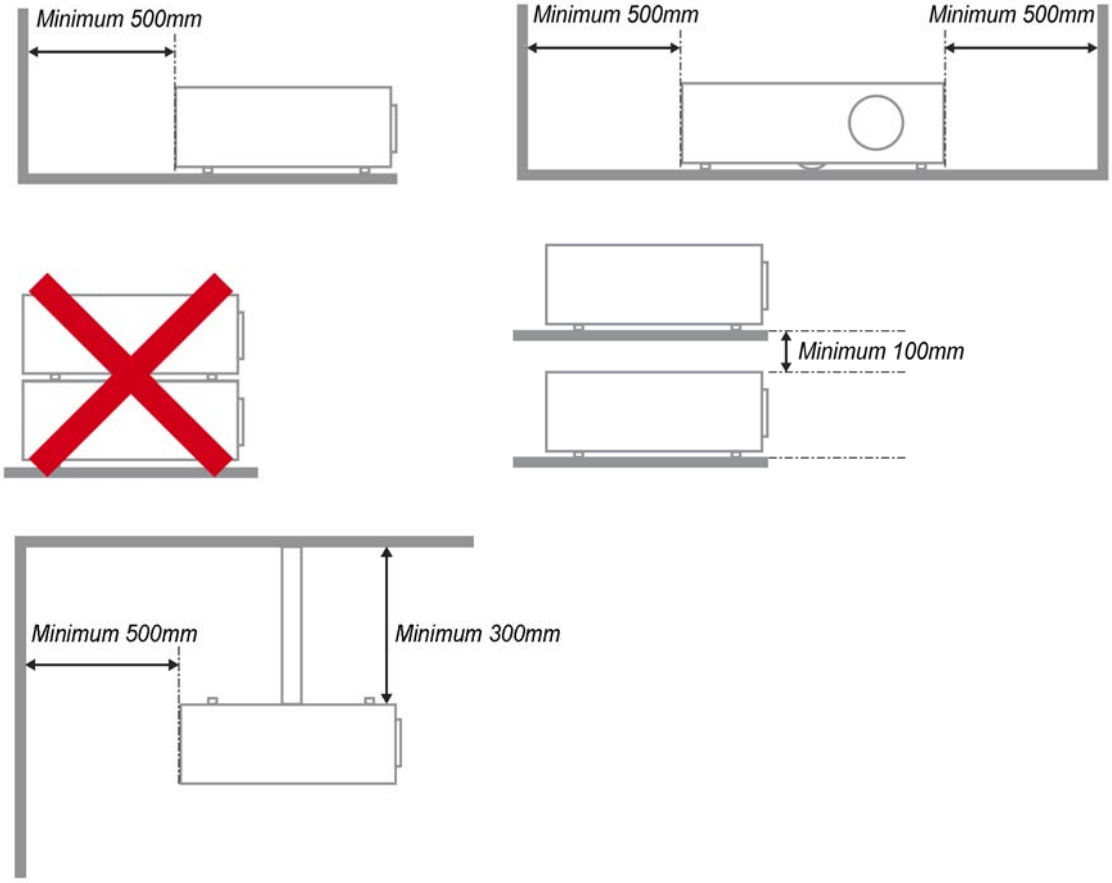

- Ensure that the intake vents do not recycle hot air from the exhaust vent.
- When operating the projector in an enclosed space, ensure that the surrounding air temperature within the enclosure does not exceed operation temperature while the projector is running, and the air intake and exhaust vents are unobstructed.
- All enclosures should pass a certified thermal evaluation to ensure that the projector does not recycle exhaust air, as this may cause the device to shutdown even if the enclosure temperature is with the acceptable operation temperature range.

Verify Installation Location

- Verify if the voltage is stable, grounded properly and there is no electricity leakage.
- Measure total power consumption which should not higher the safety capacity and avoid safety issue and short circuit.
- Turn on Altitude Mode when located in high altitude areas
- The projector can only be installed upright or inverted.
- When installation the bracket, make sure the weight limit is not exceed and firmly secured.
- Avoid installing near air conditioner duct or subwoofer.
- Avoid installing at high temperature, insufficient cooling and heavy dust locations.
- Keep your product away from fluorescent lamps to avoid malfunction caused by IR interference
- Install the projector above 200cm to avoid damage.

Cooling notes

Air outlet

- Make sure the air outlet is 50cm clear of any obstruction to ensure proper cooling.
- Air outlet location should not be in front of the lens of other projector to avoid causing illusions.
- Keep the outlet at least 100cm away from the inlets of other projectors

Air inlet

- Make sure there is no object blocking air input within 30 cm.
- Keep the inlet away from other heat sources
- Avoided heavy dust area

Choosing a Projector

Edge blending application

Not only brightness, bright balances, lens but stability is important too when choosing a projector.

- A projector need 30 to 60 minutes warm up to adjust properly.
- After lens shift, there should not be any optical distortion such as trapezoidal and barrel shape distortions.
- Quick dis-assemble lens need to be firmly secured, the electric motor cannot be mistakenly shift. The screen should not be offset for long time use or during booting up and shutting down the projector.
- Projector six-axis colors (R,G,B,Y,C,W). Projector adjust functions require: Hue, Saturation, Gain
- Vertical or 360 degree projection application. Needs to VERIFY engineering design of lamp aging to avoid conflict with client.

HDMI Cable

Edge blending signal needs to use digital transfer, the 4 pairs of TMDS transfer impedance require 100 Ω diameter as following to maintain signal quality:

- 5 M : AWG 26
- 10 M : AWG 24
- 15 M : AWG 22
- 20 M : AWG 22
- 25 M : AWG 22

Power Safety

- Only use the supplied power cord.
- Do not place anything on the power cord. Place the power cord where it will not be in the way of foot traffic.
- Remove the batteries from the remote control when storing or not in use for a prolonged period.

Replacing the Lamp

Replacing the lamp can be hazardous if done incorrectly. See *Replacing the Projection Lamp* on page 34 for clear and safe instructions for this procedure. Before replacing the lamp:

- Unplug the power cord.
- Allow the lamp to cool for about one hour.

Caution:
In rare cases the lamp bulb may burn out during normal operation and cause glass dust or shards to be discharged outward from the rear exhaust vent.

Do not inhale or do not touch glass dust or shards. Doing so could result in injury.

Always keep your face away from the exhaust vent so that you do not suffer from the gas and broken shards of the lamp.

Cleaning the Projector

- Unplug the power cord before cleaning. See *Cleaning the Projector* page 37.
- Allow the lamp to cool for about one hour.

Regulatory Warnings

Before installing and using the projector, read the regulatory notices in the *Regulatory Compliance* on page 51.

Important Recycle Instructions:

Hg Lamp(s) inside this product contain mercury. This product may contain other electronic waste that can be hazardous if not disposed of properly. Recycle or dispose in accordance with local, state, or federal Laws. For more information, contact the Electronic Industries Alliance at WWW.EIAE.ORG. For lamp specific disposal information check WWW.LAMPRECYCLE.ORG.

Symbol Explanations

DISPOSAL: Do not use household or municipal waste collection services for disposal of electrical and electronic equipment. EU countries require the use of separate recycling collection services.

Main Features

- *Lightweight unit, easy to pack away and transport.*
- *Compatible with all major video standards including NTSC, PAL, and SECAM.*
- *A high brightness rating allows for presentations in daylight or in lit rooms.*
- *Supports resolutions up to UXGA at 16.7 million colors to deliver crisp, clear images.*
- *Flexible setup allows for front, rear projections.*
- *Line-of-vision projections remain square, with advanced keystone correction for angled projections.*
- *Input source automatically detected.*

About this Manual

This manual is intended for end users and describes how to install and operate the DLP projector. Wherever possible, relevant information—such as an illustration and its description—has been kept on one page. This printer-friendly format is both for your convenience and to help save paper, thereby protecting the environment. It is suggested that you only print sections that are relevant to your needs.

Table of Contents

GETTING STARTED **1**

PACKING CHECKLIST 1
VIEWS OF PROJECTOR PARTS 2
Front-right View *2*
Top view—On-screen Display (OSD) buttons and LEDs *3*
Rear view *4*
Bottom view *5*
REMOTE CONTROL PARTS 6
Inserting the Remote Control Batteries *8*
REMOTE CONTROL OPERATING RANGE 9
PROJECTOR AND REMOTE CONTROL BUTTONS 9

SETUP AND OPERATION **10**

STARTING AND SHUTTING DOWN THE PROJECTOR 10
SETTING AN ACCESS PASSWORD (SECURITY LOCK) 12
ADJUSTING THE PROJECTOR LEVEL 14
ADJUSTING THE ZOOM, FOCUS AND KEYSTONE 15
ADJUSTING THE VOLUME 15

ON-SCREEN DISPLAY (OSD) MENU SETTINGS **16**

OSD MENU CONTROLS 16
Navigating the OSD *16*
SETTING THE OSD LANGUAGE 17
OSD MENU OVERVIEW 18
OSD SUB-MENU OVERVIEW 19
IMAGE MENU 20
Advanced Feature *21*
Color Manager *22*
COMPUTER MENU 23
VIDEO/AUDIO MENU 24
Audio *25*
INSTALLATION I MENU 26
Advanced Feature *27*
INSTALLATION II MENU 28
Advanced Feature *29*
Factory Reset *33*
Status *33*

MAINTENANCE AND SECURITY **34**

REPLACING THE PROJECTION LAMP 34
Resetting the Lamp *36*
CLEANING THE PROJECTOR 37
Cleaning the Lens *37*
Cleaning the Case *37*
USING THE KENSINGTON® LOCK & USING THE SECURITY BAR 38
Using the Kensington® Lock *38*
Using the Security Bar *38*

TROUBLESHOOTING **39**

COMMON PROBLEMS AND SOLUTIONS 39
TIPS FOR TROUBLESHOOTING 39
LED ERROR MESSAGES 40
IMAGE PROBLEMS 40
LAMP PROBLEMS 41
REMOTE CONTROL PROBLEMS 41
AUDIO PROBLEMS 41
HAVING THE PROJECTOR SERVICED 42
HDMI Q & A 43

SPECIFICATIONS **44**

SPECIFICATIONS 44
PROJECTION DISTANCE VS. PROJECTION SIZE 45
Projection Distance and Size Table *45*
TIMING MODE TABLE 46
PROJECTOR DIMENSIONS 50

REGULATORY COMPLIANCE **51**

FCC WARNING 51
CANADA 51
SAFETY CERTIFICATIONS 51

GETTING STARTED

Packing Checklist

Carefully unpack the projector and check that the following items are included:

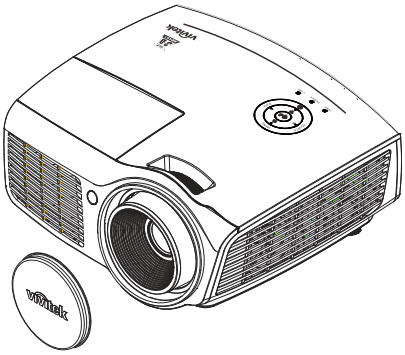

DLP PROJECTOR WITH LENS CAP

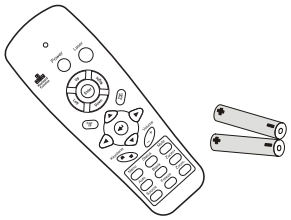

REMOTE CONTROL
(WITH TWO AAA BATTERIES)

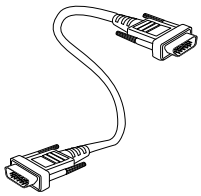

RGB CABLE

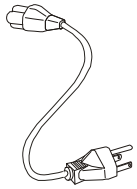

POWER CORD

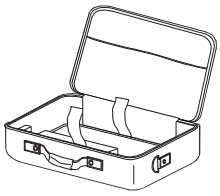

CARRYING CASE
(OPTIONAL)

CD-ROM
(THIS USER'S MANUAL)

QUICK START GUIDE

WARRANTY CARD

Contact your dealer immediately if any items are missing, appear damaged, or if the unit does not work. It is recommend that you keep the original packing material should you ever need to return the equipment for warranty service.

Caution:
Avoid using the projector in dusty environments.

Views of Projector Parts

Front-right View

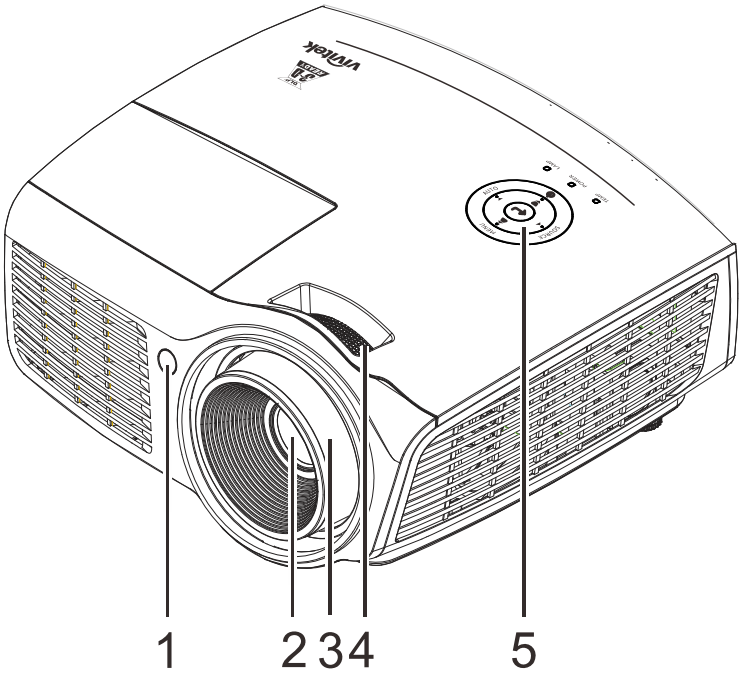

ITEM	LABEL	DESCRIPTION	SEE PAGE:
1.	IR receiver	Receive IR signal from remote control	
2.	Lens	Projection Lens	
3.	Focus ring	Focuses the projected image	***15***
4.	Zoom ring	Enlarges the projected image	
5.	Function keys	See Top view—On-screen Display (OSD) buttons and LEDs.	***3***

Important:
Ventilation openings on the projector allow for good air circulation, which keeps the projector lamp cool. Do not obstruct any of the ventilation openings.

Top view—On-screen Display (OSD) buttons and LEDs

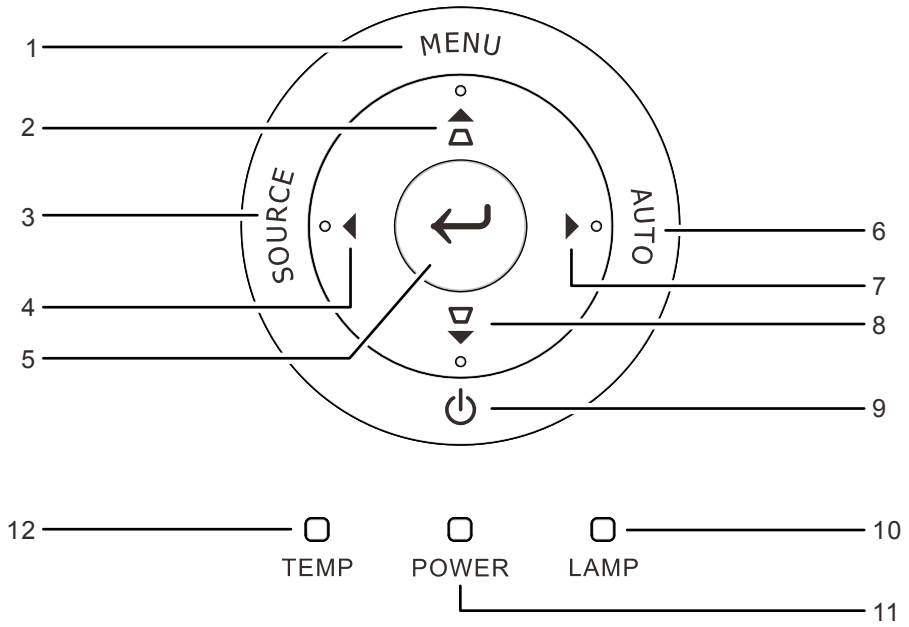

ITEM	LABEL	DESCRIPTION		SEE PAGE:
1.	MENU	Opens and exits OSD menus		***16***
2.	▲ (Up cursor) / Keystone+	Navigates and changes settings in the OSD Quick Menu – For Keystone		***16***
3.	SOURCE	Enter the Source menu		
4.	◄ (Left cursor) / Volume-	Navigates and changes settings in the OSD Quick Menu – For Volume		
5.	Enter	Enter or confirm highlighted OSD menu item		
6.	AUTO	Optimizes image size, position, and resolution		
7.	► (Right cursor) / Volume+	Navigates and changes settings in the OSD Quick Menu – For Volume		***16***
8.	▼ (Down cursor) / Keystone-	Navigates and changes settings in the OSD Quick Menu – For Keystone		
9.	⏻ (Power button)	Turns the projector On or Off.		
10.	LAMP LED	Solid Red	Lamp Error.	***40***
		Flashing Red	Lamp temperature too high	
11.	POWER LED	Solid Green	Power On	
		Flashing Green	System Initialized / Cooling / Error code	
12.	TEMP LED	Solid Red	Over temperature	

Rear view

Warning:
As a safety precaution, disconnect all power to the projector and connecting devices before making connections.

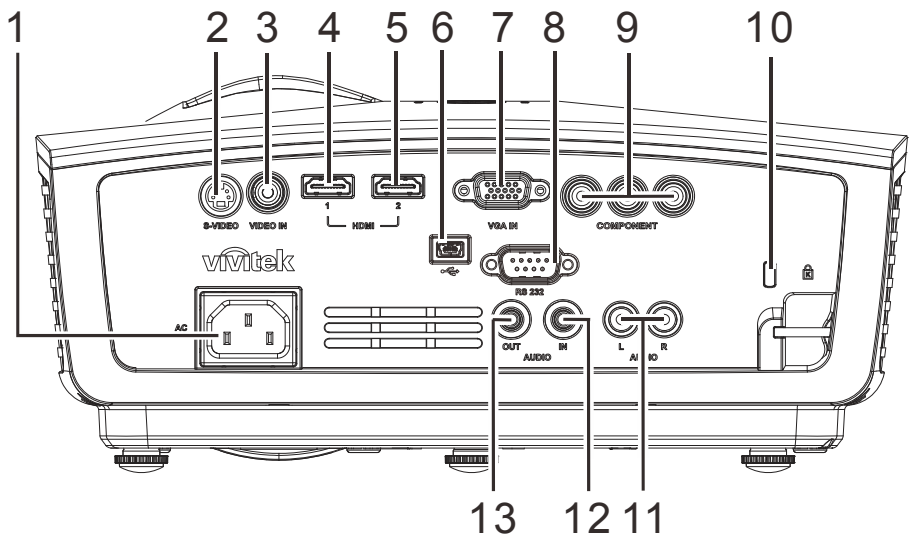

ITEM	LABEL	DESCRIPTION	SEE PAGE:
1.	AC IN	Connect the POWER cable	***10***
2.	S-VIDEO	Connect the S-VIDEO cable from a video device	
3.	VIDEO IN	Connect the COMPOSITE cable from a video device	
4.	HDMI 1	Connect the HDMI cable from a HDMI device	
5.	HDMI 2	Connect the HDMI cable from a HDMI device	
6.	(USB)	Connect the USB cable from a computer	
7.	VGA IN	Connect the RGB cable from a computer	
8.	RS-232C	Connect RS-232 serial port cable for remote control	
9.	COMPONENT	Connect the Component cable from a component device	
10.	Kensington Lock	Secure to permanent object with a Kensington® Lock system	***38***
11.	AUDIO IN (L and R)	Connect the AUDIO cable from a audio device	
12.	AUDIO IN	Connect an AUDIO cable from the audio device	
13.	AUDIO OUT	Connect an AUDIO cable to audio amplifier	

Bottom view

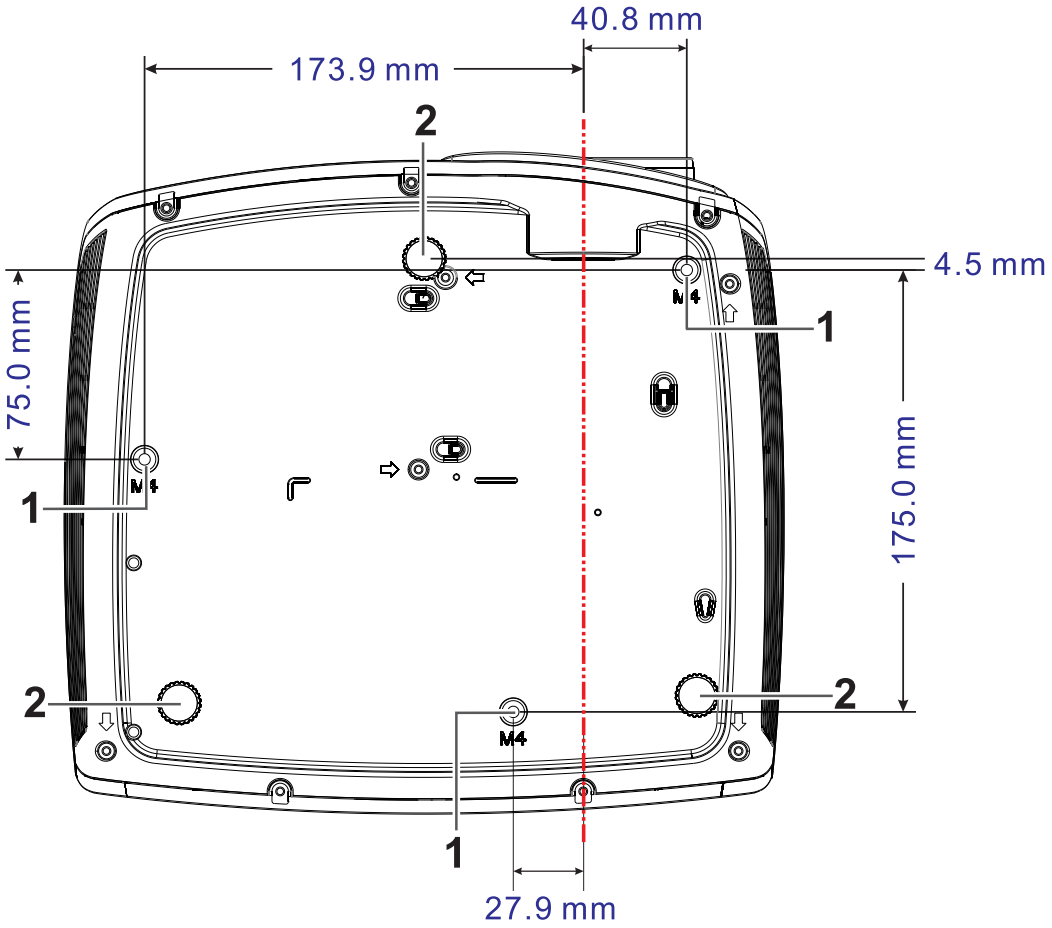

ITEM	LABEL	DESCRIPTION	SEE PAGE:
1.	Ceiling support holes	Contact your dealer for information on mounting the projector on a ceiling	
2.	Tilt adjustor	Rotate adjuster lever to adjust angle position.	***14***

Note:
When installing, ensure that you use only UL Listed ceiling mounts.
For ceiling installations, use approved mounting hardware and M4 screws with a maximum screw depth of 12 mm (0.47 inch).
The construction of the ceiling mount must be of a suitable shape and strength. The ceiling mount load capacity must exceed the weight of the installed equipment, and as an additional precaution be capable of withstanding three times the weight of the equipment (not less than 5.15 kg) over a period of 60 seconds.

Remote Control Parts

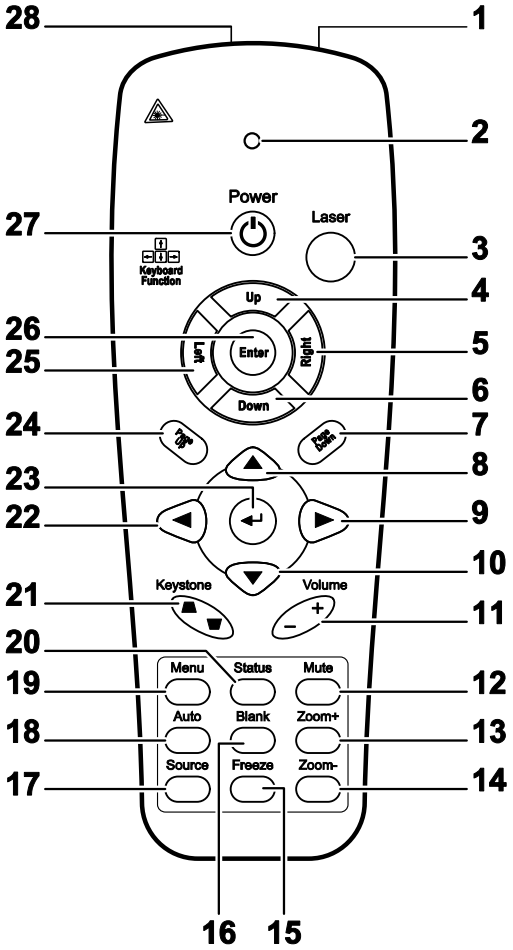

ITEM	LABEL	DESCRIPTION	SEE PAGE:
1.	IR transmitter	Transmits signals to projector	
2.	Status LED	Lights when the remote control is used	
3.	Laser	Press to operate the on-screen pointer	
4.	Up	Up arrow when connected through USB to a PC	
5.	Right	Right arrow when connected through USB to a PC	
6.	Down	Down arrow when connected through USB to a PC	
7.	Page Down	Page down when connected through USB to a PC	
8.	Up cursor	Navigates and changes settings in the OSD	***16***
9.	Right cursor		
10.	Down cursor		
11.	Volume +/-	Adjusts volume	***15***

ITEM	LABEL	DESCRIPTION	SEE PAGE:
12.	Mute	Mutes the built-in speaker	
13.	Zoom+	Zoom in	
14.	Zoom-	Zoom out	
15.	Freeze	Freeze/unfreezes the on-screen picture	
16.	Blank	Makes the screen blank	
17.	Source	Detects the input device	
18.	Auto	Auto adjustment for phase, tracking, size, position	
19.	Menu	Opens the OSD	***16***
20.	Status	Opens the OSD Status menu (the menu only opens when an input device is detected)	***33***
21.	Keystone top/bottom	Corrects image-trapezoid (wider top/bottom) effect	***15***
22.	Left cursor	Navigates and changes settings in the OSD	***16***
23.	Enter	Changes settings in the OSD	
24.	Page Up	Page up when connected through USB to a PC	
25.	Left	Left arrow when connected through USB to a PC	
26.	Enter	Enter key when connected through USB to a PC	
27.	Power	Turns the projector on or off	***10***
28.	Laser	Use as on-screen pointer. **DO NOT POINT IN EYES**.	

Inserting the Remote Control Batteries

1. Remove the battery compartment cover by sliding the cover in the direction of the arrow.

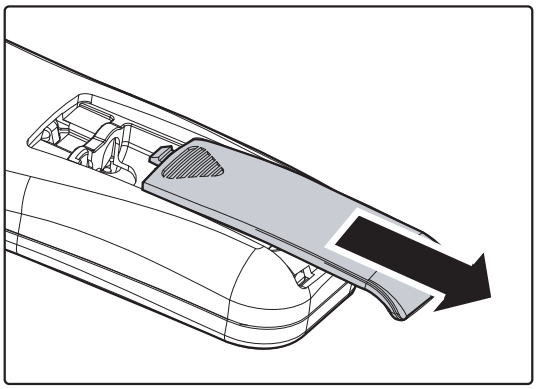

2. Insert the battery with the positive side facing up.

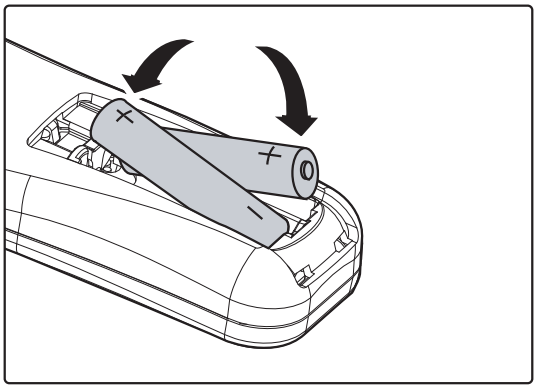

3. Replace the cover.

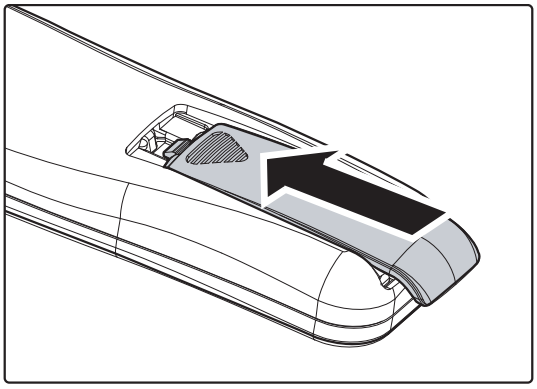

Caution:
1. *Only use AAA batteries (Alkaline batteries are recommended).*

2. *Dispose of used batteries according to local ordinance regulations.*

3. *Remove the batteries when not using the projector for prolonged periods.*

Important:
1. *Avoid using the projector with bright fluorescent lighting turned on. Certain high-frequency fluorescent lights can disrupt remote control operation.*

2. *Be sure nothing obstructs the path between the remote control and the projector. If the path between the remote control and the projector is obstructed, you can bounce the signal off certain reflective surfaces such as projector screens.*

3. *The buttons and keys on the projector have the same functions as the corresponding buttons on the remote control. This user's manual describes the functions based on the remote control.*

Remote Control Operating Range

The remote control uses infrared transmission to control the projector. It is not necessary to point the remote directly at the projector. Provided you are not holding the remote perpendicular to the sides or the rear of the projector, the remote will function well within a radius of about 7 meters (23 feet) and 15 degrees above or below the projector level. If the projector does not respond to the remote control, move a little closer.

Projector and Remote Control Buttons

The projector can be operated using the remote control or the buttons on the top of the projector. All operations can be carried out with the remote control; however, the buttons on the projector are limited in use.

SETUP AND OPERATION

Starting and Shutting down the Projector

1. Connect the power cord to the projector. Connect the other end to a wall outlet. The ⏻ **POWER** LED on the projector light.

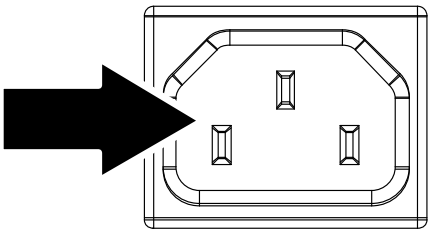

2. Turn on the connected devices.

3. Ensure the POWER LED not a flashing. Then press the ⏻ **POWER** button to turn on the projector.

   The projector splash screen displays and connected devices are detected.

   See *Setting an Access Password (Security Lock)* on page 12 if security lock is enabled.

4. If more than one input device is connected, press the **SOURCE** button and use ▲▼ to scroll among devices.

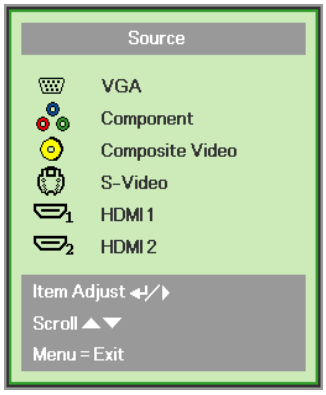

- VGA: Analog RGB
- Component: DVD input YCbCr / YPbPr, or HDTV input YPbPr.
- Composite Video: Traditional composite video
- S-Video: Super video (Y/C separated)
- HDMI 1/HDMI 2: High-Definition Multimedia Interface

5. When the "Power Off? /Press **Power** again" message appears, press the **POWER** button. The projector turns off.

Caution:

1. Be sure to remove the lens cap before starting projector.

2. Do not unplug the power cord until the POWER LED stops flashing–indicating the projector has cooled down.

Setting an Access Password (Security Lock)

You can use the four (arrow) buttons to set a password and prevent unauthorized use of the projector. When enabled, the password must be entered after you power on the projector. (See *Navigating the OSD* on page 16 and *Setting the OSD Language* on page 17 for help on using OSD menus.)

> ***Important:***
> *Keep the password in a safe place. Without the password, you will not be able to use the projector. If you lose the password, contact your reseller for information on clearing the password.*

1. Press the **MENU** button to open the OSD menu.

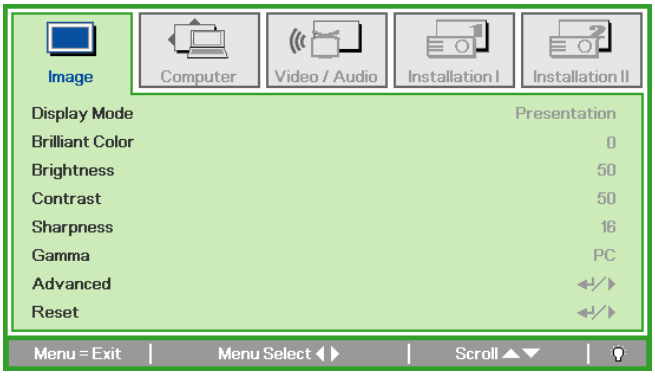

2. Press the cursor ◄► button to move to the **Installation I** menu, press the cursor ▲▼ button to select **Advanced**.

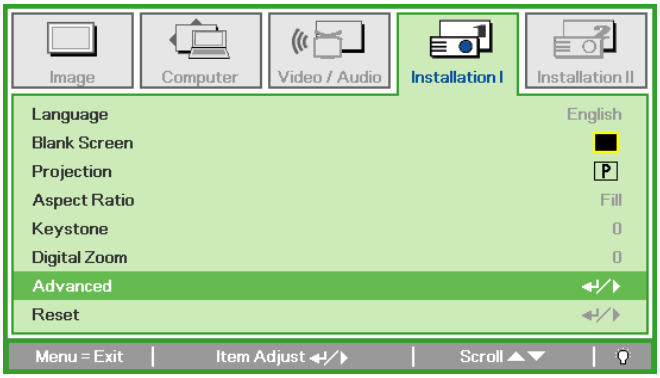

3. Press the cursor ▲▼ button to select **Security Lock**.

4. Press the cursor ◄► button to enable or disable security lock function.

   A password dialog box automatically appears.

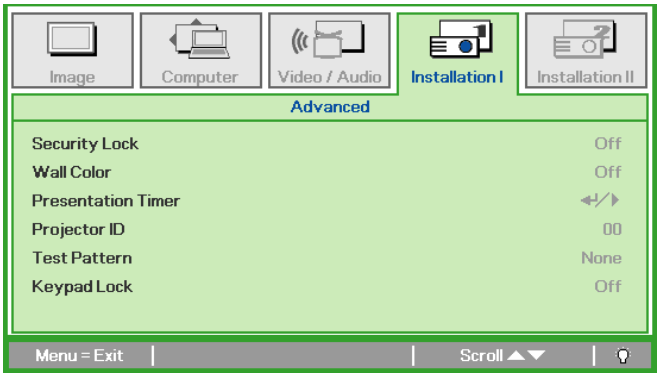

5. You can use the cursor buttons ▲▼◄► either on keypad or IR remote control for password entry. You can use any combination including the same arrow five times, but not less than five.

   Press the cursor buttons in any order to set the password. Push the **MENU** button to exit the dialog box.

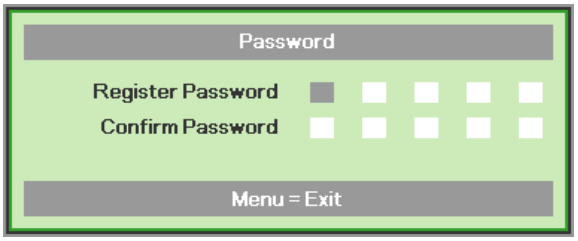

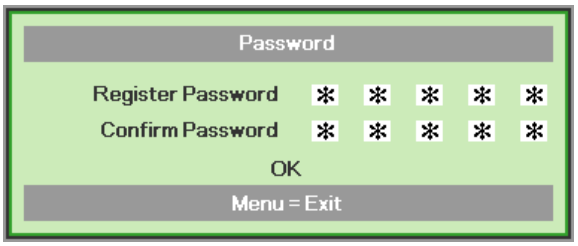

6. The password confirm menu appears when user presses the power-on key in case the **Security Lock** is enabled.
   Enter the password in the order you set it at step 5. In case you forget the password, please contact the service center.
   The service center will validate the owner and help reset the password.

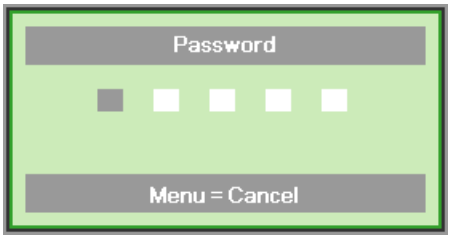

Adjusting the Projector Level

Take note of the following when setting up the projector:

- *The projector table or stand should be level and sturdy.*
- *Position the projector so that it is perpendicular to the screen.*
- *Ensure the cables are in a safe location. You could trip over them.*

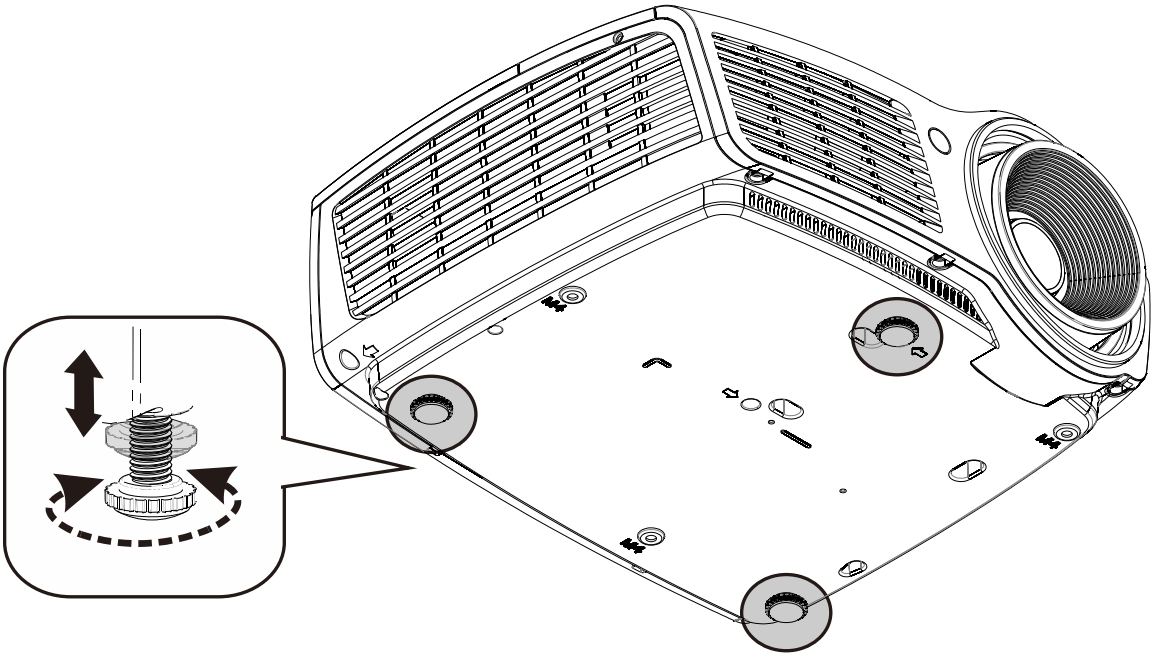

To adjust the angle of the picture, turn the tilt-adjuster right or left until the desired angle has been achieved.

Adjusting the Zoom, Focus and Keystone

1. Use the **Image-zoom** control (on the projector only) to resize the projected image and screen size B.

2. Use the **Image-focus** control (on the projector only) to sharpen the projected image A.

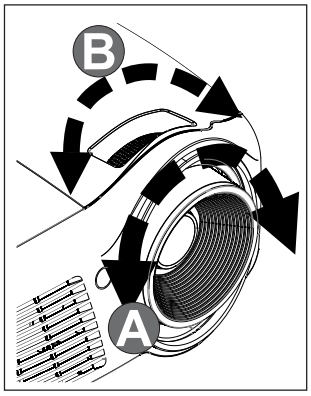

3. Use the **KEYSTONE** buttons the remote control to correct image-trapezoid (wider top or bottom) effect.

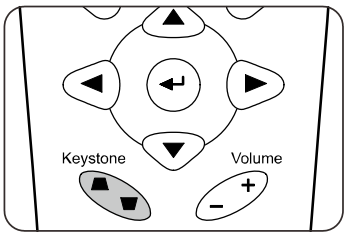

4. The keystone control appears on the display.

Adjusting the Volume

1. Press the **Volume +/-** buttons on the remote control.
The volume control appears on the display.

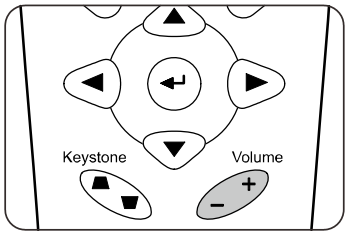

2. Press the **MUTE** button to turn off the volume.

ON-SCREEN DISPLAY (OSD) MENU SETTINGS

OSD Menu Controls

The projector has an OSD that lets you make image adjustments and change various settings.

Navigating the OSD

You can use the remote control cursor buttons to navigate and make changes to the OSD.

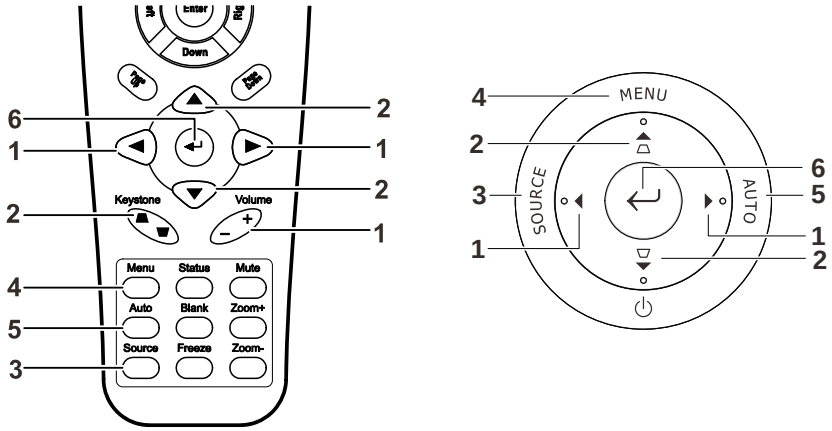

1. To enter the OSD, press the **MENU** button.
2. There are five menus. Press the cursor ◄► button to move through the menus.
3. Press the cursor ▲▼ button to move up and down in a menu.
4. Press ◄► to change values for settings.
5. Press **MENU** to close the OSD or leave a submenu.

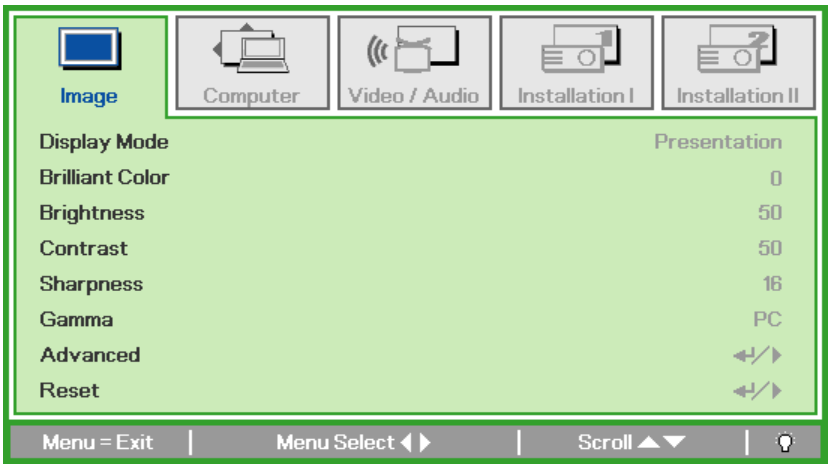

> ***Note:***
> *Depending on the video source, not all items in the OSD are available. For example, the* ***Horizontal/Vertical Position*** *items in the* ***Computer*** *menu can only be modified when connected to a PC. Items that are not available cannot be accessed and are grayed out.*

Setting the OSD Language

Set the OSD language to your preference before continuing.

1. Press the **MENU** button. Press the cursor ◄► button to navigate to Installation I.

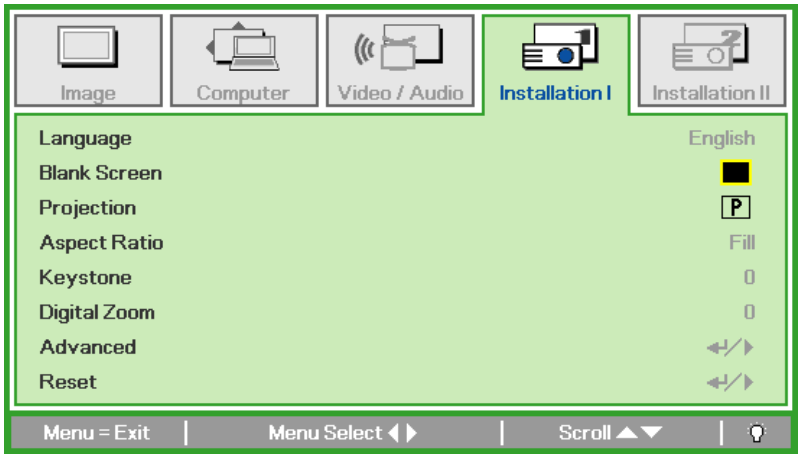

2. Press the cursor ▲▼ button until **Language** is highlighted.

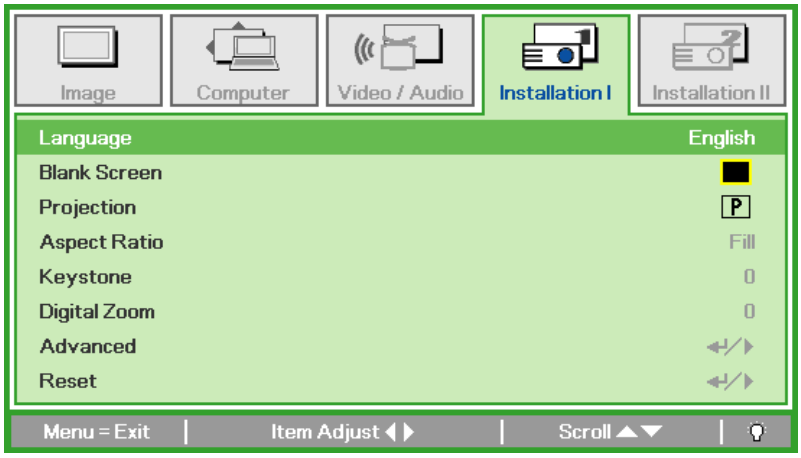

3. Press the cursor ◄► button until the language you want is highlighted.
4. Press the **MENU** button twice to close the OSD.

OSD Menu Overview

Use the following illustration to quickly find a setting or determine the range for a setting.

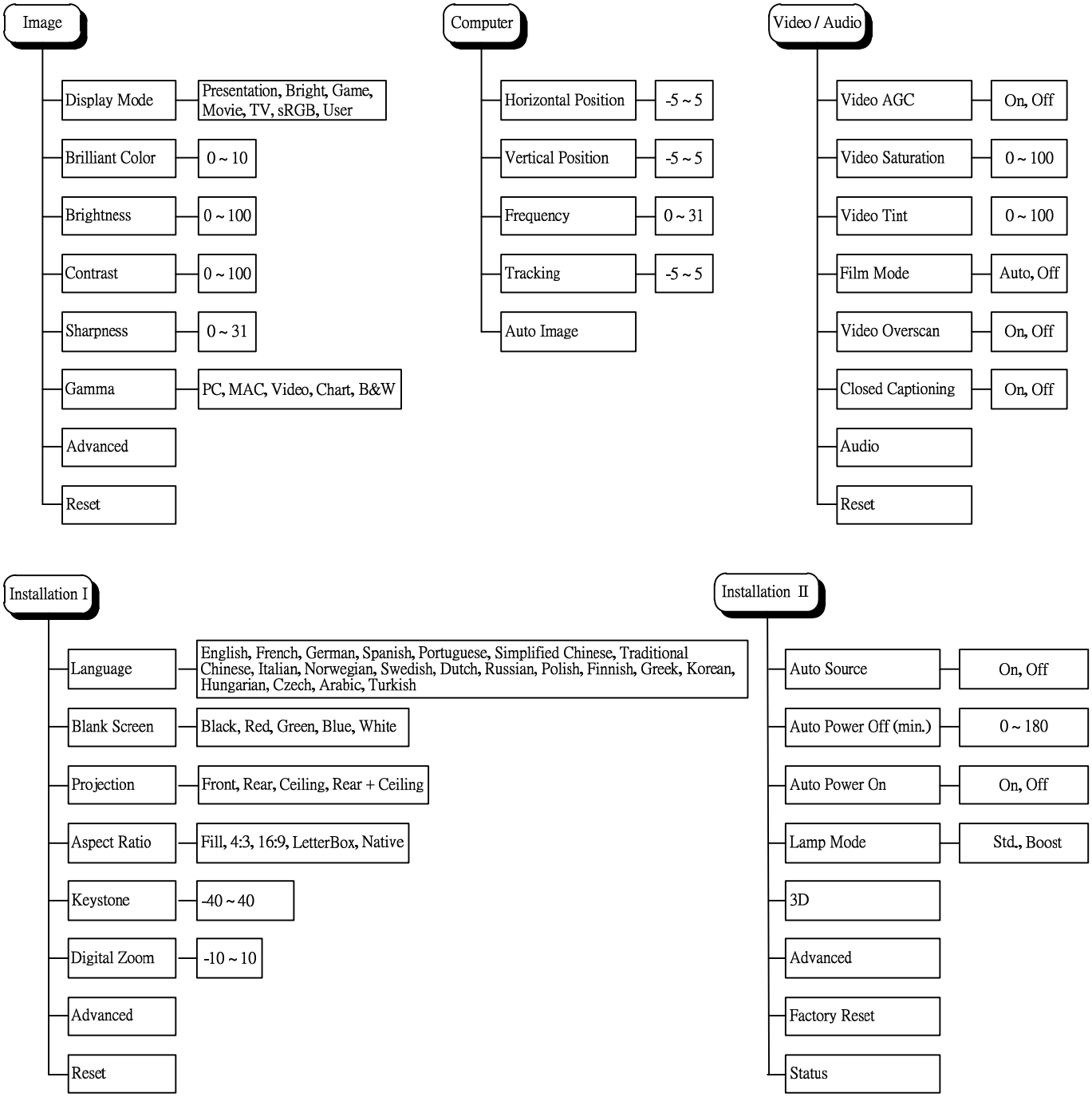

OSD Sub-Menu Overview

- Image / Advanced
  - Color Space — Auto, RGB, YCbCr, YPbPr
  - Color Temperature — Cold, Normal, Warm
  - Color Manager

- Image / Advanced / Color Manager
  - Red
    - Hue — 0 ~ 100
    - Saturation — 0 ~ 100
    - Gain — 0 ~ 100
  - Green
    - Hue — 0 ~ 100
    - Saturation — 0 ~ 100
    - Gain — 0 ~ 100
  - Blue
    - Hue — 0 ~ 100
    - Saturation — 0 ~ 100
    - Gain — 0 ~ 100
  - Cyan
    - Hue — 0 ~ 100
    - Saturation — 0 ~ 100
    - Gain — 0 ~ 100
  - Magenta
    - Hue — 0 ~ 100
    - Saturation — 0 ~ 100
    - Gain — 0 ~ 100
  - Yellow
    - Hue — 0 ~ 100
    - Saturation — 0 ~ 100
    - Gain — 0 ~ 100
  - White
    - Red — 0 ~ 100
    - Green — 0 ~ 100
    - Blue — 0 ~ 100

- Video / Audio / Audio
  - Volume — 0 ~ 8
  - Mute — On, Off

- Installation I / Advanced
  - Security Lock — On, Off
  - Wall Color — Off, Light Yellow, Pink, Light Green, Blue, Blackboard
  - Presentation Timer
  - Projector ID — 00 ~ 98
  - Test Pattern — None, RGB Ramps, Color Bars, Step Bars, Check board, Grid, Horizontal Lines, Vertical Lines, Horizontal Ramp, Vertical Ramp, While
  - Keypad Lock — On, Off

- Installation I / Advanced / Presentation Timer
  - Timer — On, Off
  - Timer Period — 1 ~ 60
  - Timer Reset

- Installation II / Advanced
  - OSD Menu Setting
  - Peripheral Test
  - Lamp Hour Reset
  - Low Power Mode — On, Off
  - Fan Speed — Normal, High

- Installation II / Status
  - Active Source
  - Video information
  - Lamp Hours (Std., Boost)

- Installation II / Advanced / OSD Menu Setting
  - Menu Position — Center, Down, Up, Left, Right
  - Translucent Menu — 0%, 25%, 50%, 75%, 100%
  - Menu Display — 10 ~ 20

- Installation II / Advanced / Peripheral Test
  - Remote Control Test
  - Color Test
  - Button Test
  - USB Test

- Installation II / Advanced / 3D
  - 3D — Off, DLP-Link
  - 3D Format — Frame Sequential, Top/Bottom, Side By Side ,Frame Packing
  - 3D Sync Invert — On, Off
  - 2Dto3D — On, Off
  - 2Dto3D Deep — Inward 1,Inward 2,Inward 3,Outward 1, Outward 2, Outward 3
  - 2Dto3D Curve — 0 ~ 3

- Installation II / Advanced / Network
  - Network State — Connect, Disconnect
  - DHCP — On, Off
  - IP Address — 0~255, 0~255, 0~255, 0~255
  - Subnet Mask — 0~255, 0~255, 0~255, 0~255
  - Gateway — 0~255, 0~255, 0~255, 0~255
  - DNS — 0~255, 0~255, 0~255, 0~255
  - Apply

Image Menu

Press the **MENU** button to open the **OSD** menu. Press the cursor ◄► button to move to the **Image Menu**. Press the cursor ▲▼ button to move up and down in the **Image** menu. Press ◄► to change values for settings.

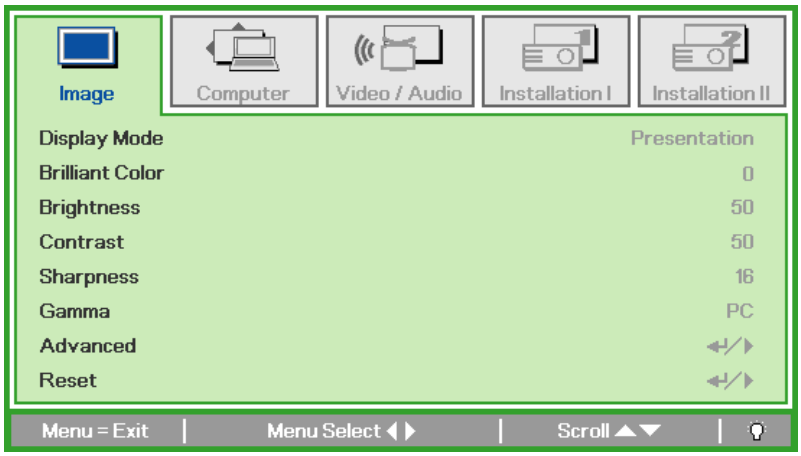

ITEM	DESCRIPTION
Display Mode	Press the cursor ◄► button to set the Display Mode.
Brilliant Color	Press the cursor ◄► button to adjust the Brilliant Color value.
Brightness	Press the cursor ◄► button to adjust the display brightness.
Contrast	Press the cursor ◄► button to adjust the display contrast.
Sharpness	Press the cursor ◄► button to adjust the display sharpness level.
Gamma	Press the cursor ◄► button to adjust the gamma correction of the display.
Advanced	Press ↵ (Enter) / ► to enter the Advanced menu. See *Advanced Feature* on page 21.
Reset	Press ↵ (Enter) / ► to reset all settings to default values.

Advanced Feature

Press the **Menu** button to open the **OSD** menu. Press ◄► to move to the **Image** menu. Press ▼▲ to move to the **Advanced** menu and then press **Enter** or ►. Press ▼▲ to move up and down in the **Advanced** menu.

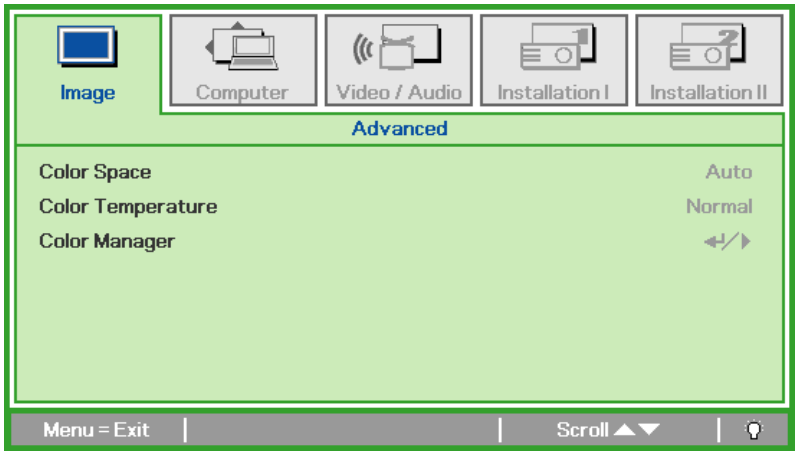

ITEM	DESCRIPTION
Color Space	Press the cursor ◄► button to adjust the color space.
Color Temperature	Press the cursor ◄► button to adjust the color temperature.
Color Manager	Press ↵ (Enter) / ► to enter the color manager menu. See page 22 for more information on *Color Manager*.

Color Manager

Press ↵ (Enter) / ► to enter the **Color Manager** sub menu.

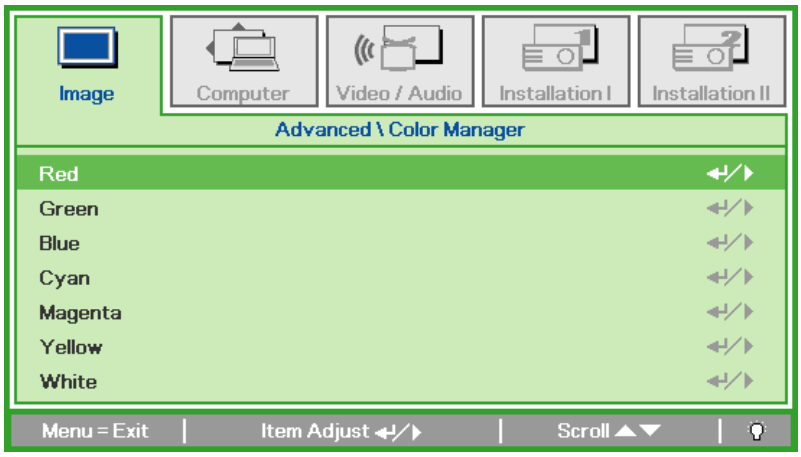

ITEM	DESCRIPTION
Red	Select to enter the Red Color Manager. Press the ◄► buttons to adjust the Hue, Saturation, and Gain.
Green	Select to enter the Green Color Manager. Press the ◄► buttons to adjust the Hue, Saturation, and Gain.
Blue	Select to enter the Blue Color Manager. Press the ◄► buttons to adjust the Hue, Saturation, and Gain.
Cyan	Select to enter the Cyan Color Manager. Press the ◄► buttons to adjust the Hue, Saturation, and Gain.
Magenta	Select to enter the Magenta Color Manager. Press the ◄► buttons to adjust the Hue, Saturation, and Gain.
Yellow	Select to enter the Yellow Color Manager. Press the◄► buttons to adjust the Hue, Saturation, and Gain.
White	Select to enter the White Color Manager. Press the ◄► buttons to adjust the Red, Green, and Blue.

Computer Menu

Press the **MENU** button to open the **OSD** menu. Press the cursor ◄► button to move to the **Computer** menu. Press the cursor ▲▼ button to move up and down in the computer menu. Press ◄► to change values for settings.

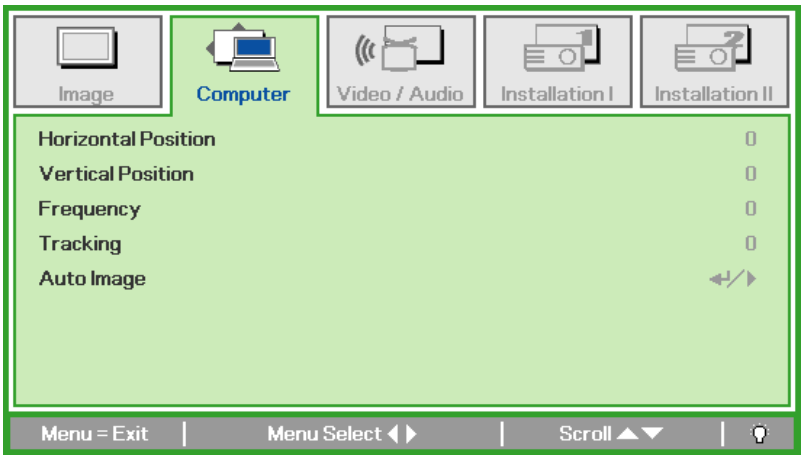

ITEM	DESCRIPTION
Horizontal Position	Press the cursor ◄► button to adjust the display position to left or right.
Vertical Position	Press the cursor ◄► button to adjust the display position to up or down.
Frequency	Press the cursor ◄► button to adjust the A/D sampling clock.
Tracking	Press the cursor ◄► button to adjust the A/D sampling dot.
Auto Image	Press ↵ (Enter) / ► to automatically adjustment for phase, tracking, size and position.

Video/Audio Menu

Press the **MENU** button to open the **OSD** menu. Press the cursor ◄► button to move to the **Video/Audio** menu. Press the cursor ▲▼ button to move up and down in the **Video/Audio** menu. Press ◄► to change values for settings.

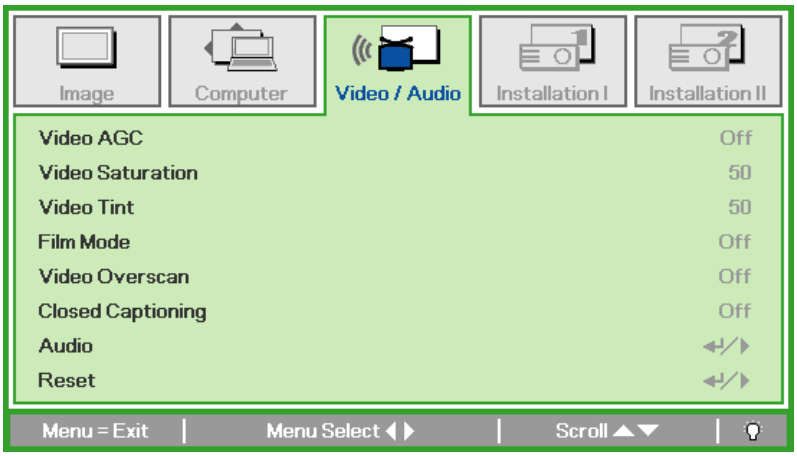

ITEM	DESCRIPTION
Video AGC	Press the ◄► buttons to enable or disable the Automatic Gain Control for video source.
Video Saturation	Press the ◄► buttons to adjust the video saturation.
Video Tint	Press the ◄► buttons to adjust the video tint/hue.
Film Mode	Press the ◄► buttons to select a different film mode.
Video Overscan	Press the ◄► buttons to enable or disable video over scan.
Closed Captioning	Press the ◄► buttons to enable or disable Closed Captioning
Audio	Press ↵ (Enter) / ► to enter the Audio menu. See *Audio* on page 25.
Reset	Press ↵ (Enter) / ► to reset all settings to default values.

Note:
Video jagging may occur when playing interlace video. To overcome this issue, open the Video / Audio menu and adjust the Film Mode feature.

Audio

Press ↵ (Enter) / ► to enter the **Audio** sub menu.

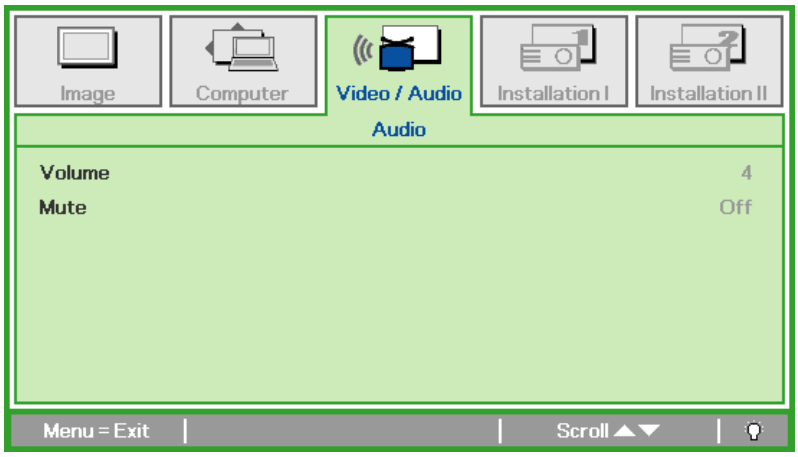

ITEM	DESCRIPTION
Volume	Press the ◄► buttons to adjust the audio volume.
Mute	Press the ◄► buttons to turn on or off the speaker.

Installation I Menu

Press the **MENU** button to open the **OSD** menu. Press the cursor ◄► button to move to the **Installation I** menu. Press the cursor ▲▼ button to move up and down in the **Installation I** menu. Press ◄► to change values for settings.

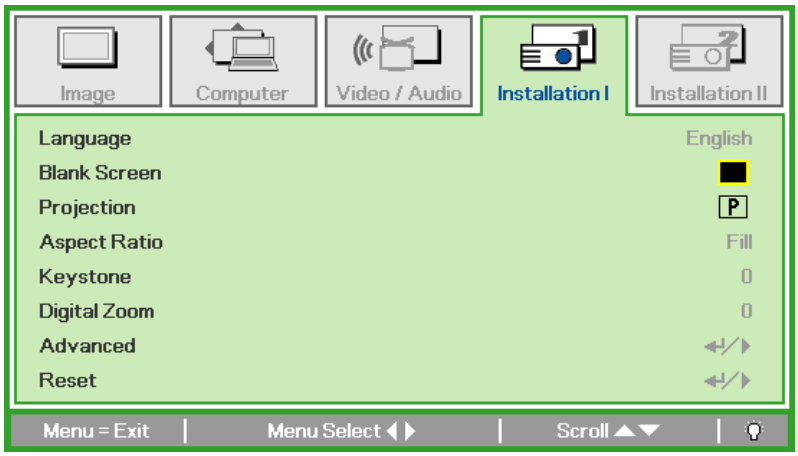

ITEM	DESCRIPTION
Language	Press the cursor ◄► button to select a different localization Menu.
Blank Screen	Press the cursor ◄► button to select different color to blank the screen.
Projection	Press the cursor ◄► button to choose from four projection methods:
Aspect Ratio	Press the cursor ◄► button to adjust the video aspect ratio.
Keystone	Press the cursor ◄► button to adjust the display keystone.
Digital Zoom	Press the cursor ◄► button to adjust the Digital Zoom menu.
Advanced	Press ↵ (Enter) / ► to enter the Advanced menu. See *Advanced Feature* on page 29.
Reset	Press ↵ (Enter) / ► to reset all settings to default values (expect Language and Security Lock).

Advanced Feature

Press the **Menu** button to open the **OSD** menu. Press ◄► to move to the **Installation I** menu. Press ▲▼ to move to the **Advanced** menu and then press **Enter** or ►. Press ▲▼ to move up and down in the **Advanced** menu. Press ◄► to change values for setting.

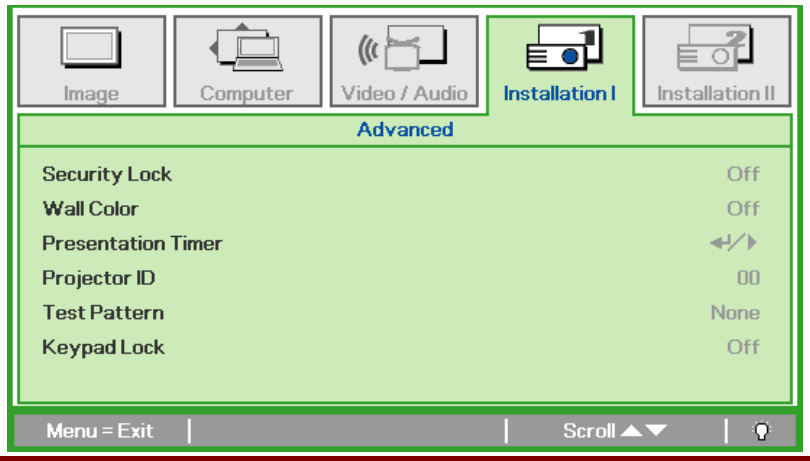

ITEM	DESCRIPTION
Security Lock	Press the cursor ◄► button to enable or disable security lock function.
Wall Color	Press the cursor ◄► button to select different wall color setting.
Presentation Timer	Press ↵ (Enter) / ► to enter the Presentation menu. See *Advanced Feature* on page 27.
Projector ID	Press the cursor ◄► button to adjust a two digit projector ID from 0 through 99.
Test Pattern	Press the cursor ◄► button to select internal test pattern.
Keypad Lock	Press the cursor ◄► button to enable or disable keys can be work on keypad.

Presentation Timer

The Presentation Timer function can indicate the presentation time on the screen to help you achieve better time management when giving presentations.

Press ↵ (Enter) / ► to enter the **Presentation Timer** sub menu.

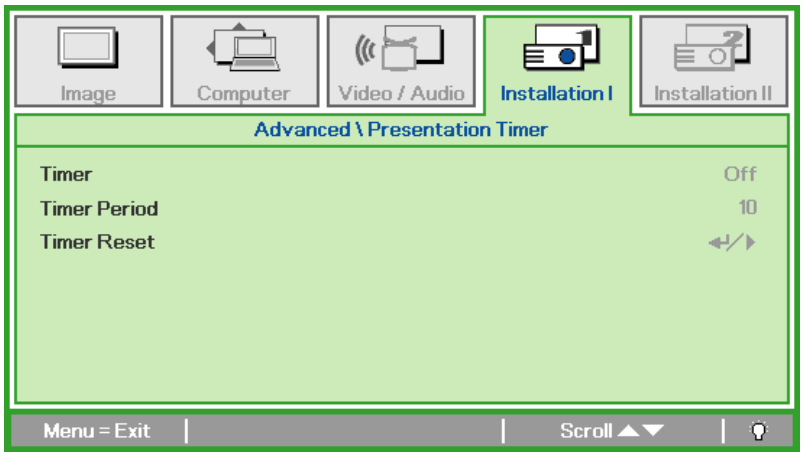

ITEM	DESCRIPTION
Timer	Press the cursor ◄► button to enable or disable presentation timer function.
Timer Period	Press the cursor ◄► button to adjust the display timer period.
Timer Reset	Press ↵ (Enter) / ► to reset presentation timer counter.

Installation II Menu

Press the **MENU** button to open the **OSD** menu. Press the cursor ◄► button to move to the **Installation II** menu. Press the cursor ▲▼ button to move up and down in the Installation II menu.

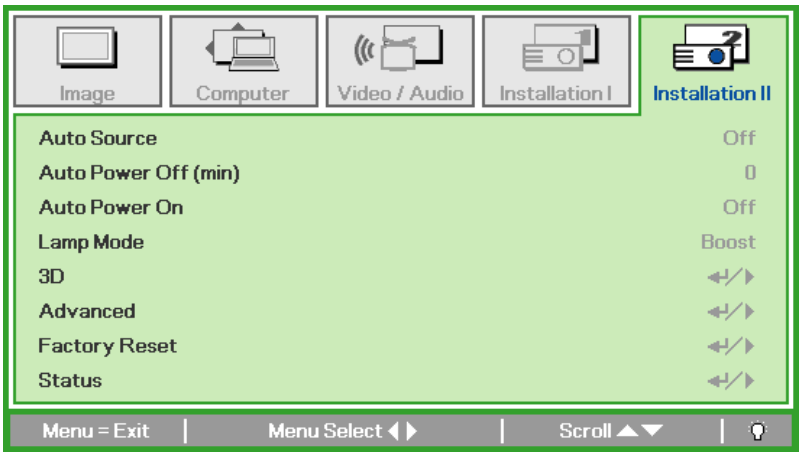

ITEM	DESCRIPTION
Auto Source	Press the cursor ◄► button to enable or disable automatic source detection.
Auto Power Off (min.)	Press the cursor ◄► button to enable or disable automatic shutdown of lamp when no signal.
Auto Power On	Press the cursor ◄► button to enable or disable automatic power On when AC power is supplied.
Lamp Mode	Press the cursor ◄► button to select the lamp mode for higher brightness or lower brightness to save lamp life.
3D	Press ↵ (Enter) / ► to enter the 3D menu. See page 32 for more information on *3D* setting..
Advanced	Press ↵ (Enter) / ► to enter the Advanced menu. See *Advanced Feature* on page 29.
Factory Reset	Press ↵ (Enter) / ► to reset all items to factory preset values.
Status	Press ↵ (Enter) / ► to enter the Status menu. See page 33 for more information on *Status*.

Note:
To enjoy the 3D function, first enable the Play Movie in 3D setting found in your DVD device under the 3D Disc Menu.

Advanced Feature

Press the **Menu** button to open the **OSD** menu. Press ◄► to move to the **Installation II** menu. Press ▲▼ to move to the **Advanced** menu and then press **Enter** or ►. Press ▲▼ to move up and down in the **Advanced** menu. Press ◄► to change values for setting.

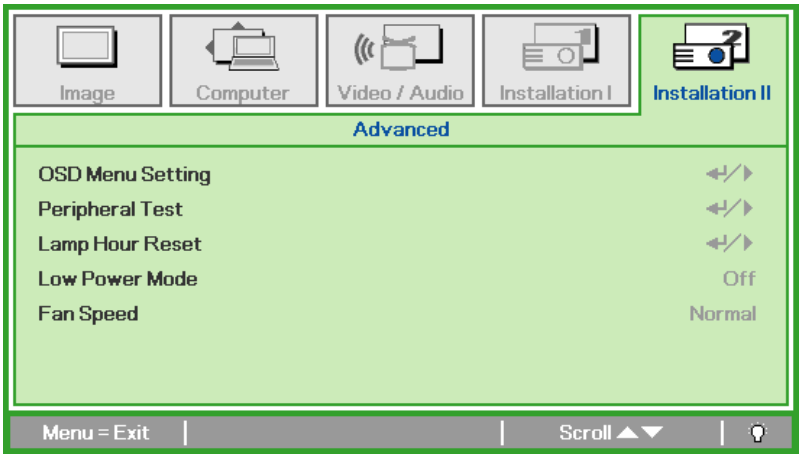

ITEM	DESCRIPTION
OSD Menu Setting	Press Enter / ► to enter the OSD setting menu. See page 30 for more information on *OSD Menu Setting*.
Peripheral Test	Press Enter/ ► to enter the Peripheral Test menu. See page 30 for more information on *Peripheral Test*.
Lamp Hour Reset	After replacing the lamp, this item should be reset. See page 31 for more information on *Lamp Hour Reset*.
Low Power Mode	Press ◄► to turn Low Power Mode on or off.
Fan Speed	Press the cursor ◄► button to toggle between Normal and High fan speeds. **Note**: We recommend selecting high speed in high temperatures, high humidity, or high altitude (1500m/4921ft) areas.

OSD Menu Setting

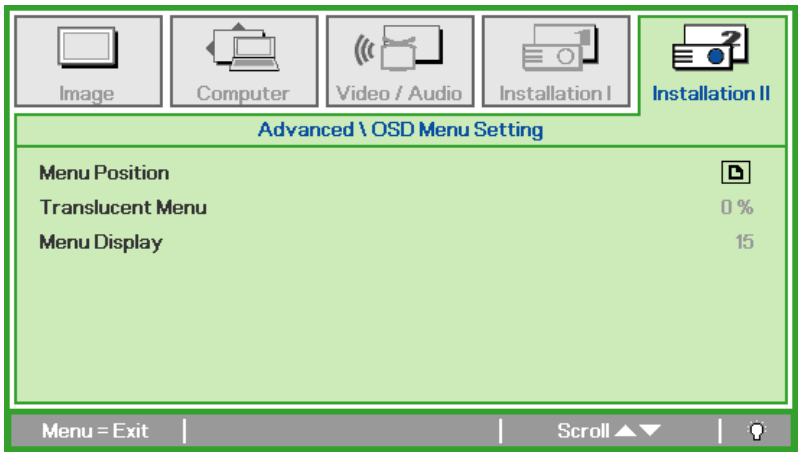

ITEM	DESCRIPTION
Menu Position	Press ◀▶ button to select different OSD location.
Translucent Menu	Press ◀▶ button to select OSD background translucent level.
Menu Display	Press ◀▶ button to select OSD timeout delay.

Peripheral Test

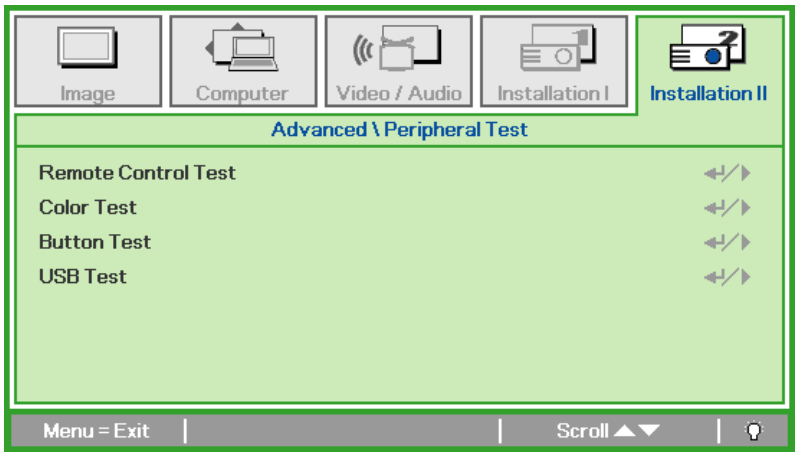

ITEM	DESCRIPTION
Remote Control Test	Press ↵ (Enter) / ▶ to test the IR remote controller for diagnostic.
Color Test	Press ↵ (Enter) / ▶ to select different colors on screen.
Button Test	Press ↵ (Enter) / ▶ to test the button on keypad.
USB Test	Press ↵ (Enter) / ▶ to test the USB connection with connected PC.

Lamp Hour Reset

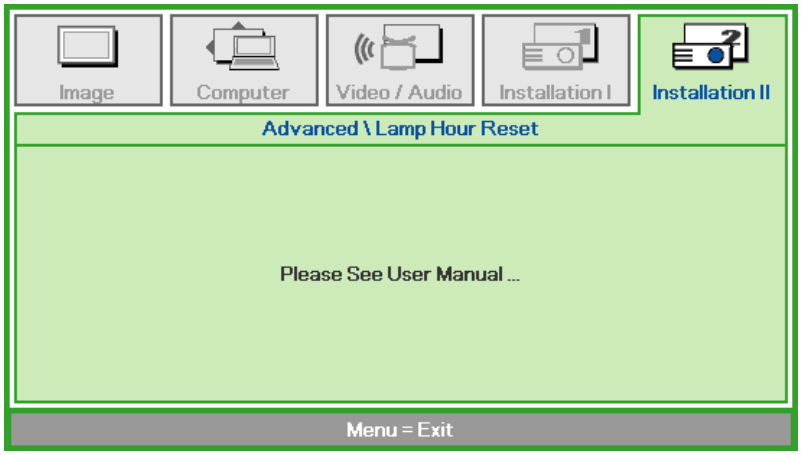

Please refer to *Resetting the Lamp* on page 36 to reset the lamp hour counter.

3D

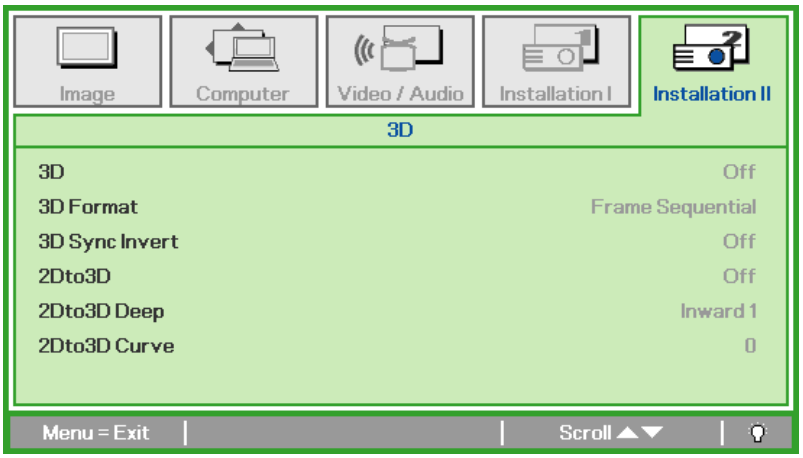

ITEM	DESCRIPTION
3D	Press the cursor ◀▶ button to select different 3D mode.
3D Format	Press the cursor ◀▶ button to enable or disable different 3D Format.
3D Sync Invert	Press the cursor ◀▶ button to enable or disable 3D Sync Invert.
2Dto3D	Press the cursor ◀▶ button to enable or disable different 2Dto3D mode.
2Dto3D Deep	Press the cursor ◀▶ button to enable or disable different 2D to 3D Deep mode.
2Dto3D Curve	Press the cursor ◀▶ button to enable or disable different 2D to 3D Curve mode.

Note:

1. *The 3D OSD menu item is gray if there is no appropriate 3D source. This is the default setting.*
2. *When the projector is connected to an appropriate 3D source, the 3D OSD menu item is enabled for selection.*
3. *Use 3D glasses to view a 3D image.*
4. *You need 3D content from a 3D DVD or 3D media file.*
5. *You need to enable the 3D source (some 3D DVD content may have a 3D on-off selection feature).*
6. *You need DLP link 3D or IR 3D shutter glasses. With IR 3D shutter glasses, you need to install a driver on your PC and connect a USB emitter.*
7. *The 3D mode of the OSD needs to match the type of glasses (DLP link or IR 3D).*
8. *Power on the glasses. Glasses normally have a power on -off switch.*
   Each type of glasses has their own configuration instructions. Please follow the configuration instructions that come with your glasses to finish the setup process.

Note:
Since different types of glass (DLP link or IR shutter glass) have their own setting instructions, Please follow the guide to finish the setup process.

Factory Reset

Press the cursor ▲▼ button to move up and down in the **Installation II** menu. Select the **Factory Reset** sub menu and press ↵ (Enter) / ► to reset all the menu items to the factory default values (expect Language and Security Lock).

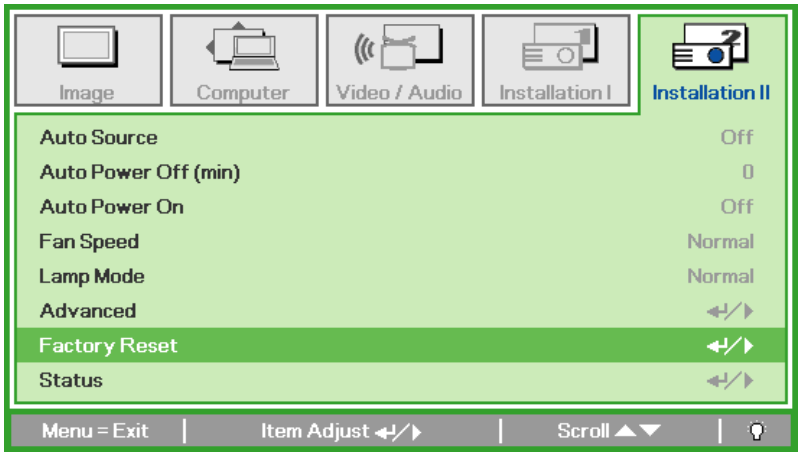

Status

Press the cursor ▲▼ button to move up and down in the **Installation II** menu. Select the **Installation II** sub menu and press ↵ (Enter) / ► to enter the **Status** sub menu.

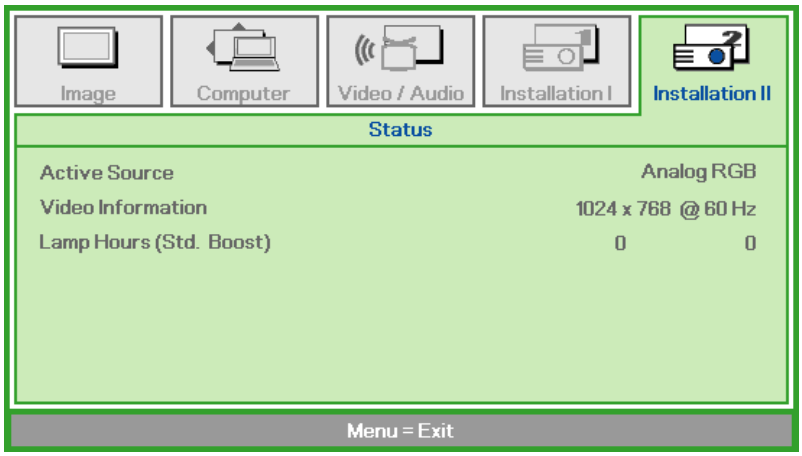

ITEM	DESCRIPTION
Active Source	Display the activated source.
Video Information	Displays resolution/video information for RGB source and color standard for Video source.
Lamp Hours	Lamp hour used information is displayed. (Std. and Boost)

MAINTENANCE AND SECURITY

Replacing the Projection Lamp

The projection lamp should be replaced when it burns out. It should only be replaced with a certified replacement part, which you can order from your local dealer.

Important:
a. *The projection lamp used in this product contains a small amount of mercury.*

b. *Do not dispose this product with general household waste.*

c. *Disposal of this product must be carried out in accordance with the regulations of your local authority.*

Warning:
Be sure to turn off and unplug the projector at least 30 minutes before replacing the lamp. Failure to do so could result in a severe burn.

Caution:
In rare cases the lamp bulb may burn out during normal operation and cause glass dust or shards to be discharged outward from the rear exhaust vent.

Do not inhale or do not touch glass dust or shards. Doing so could result in injury.

Always keep your face away from the exhaust vent so that you do not suffer from the gas and broken shards of the lamp.

When removing the lamp from a ceiling-mounted projector, make sure that no one is under the projector. Glass fragments could fall if the lamp has been burned out.

⚠ ***IF A LAMP EXPLODES***

If a lamp explodes, the gas and broken shards may scatter inside the projector and they may come out of the exhaust vent. The gas contains toxic mercury.

Open windows and doors for ventilation.

If you inhale the gas or the shards of the broken lamp enter your eyes or mouth, consult the doctor immediately.

1. Loosen the single screw on the lamp compartment cover.

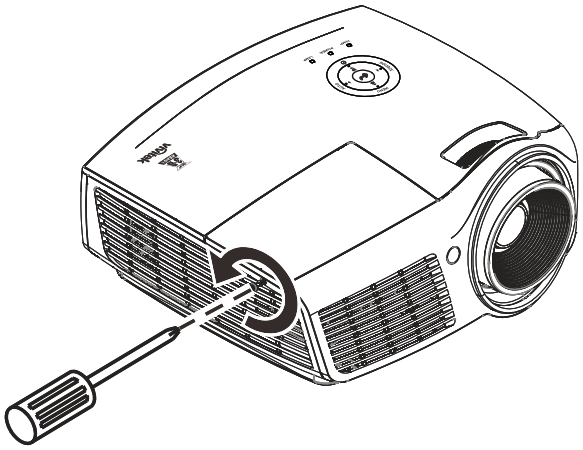

2. Remove the lamp compartment cover.

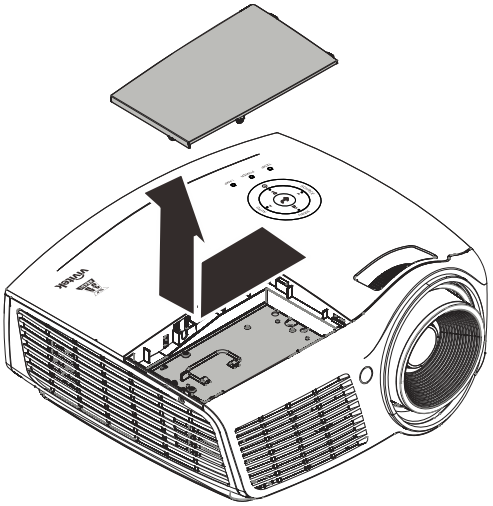

3. Remove the three screws from the lamp module.

4. Lift the module handle up.

5. Pull firmly on the module handle to remove the lamp module.

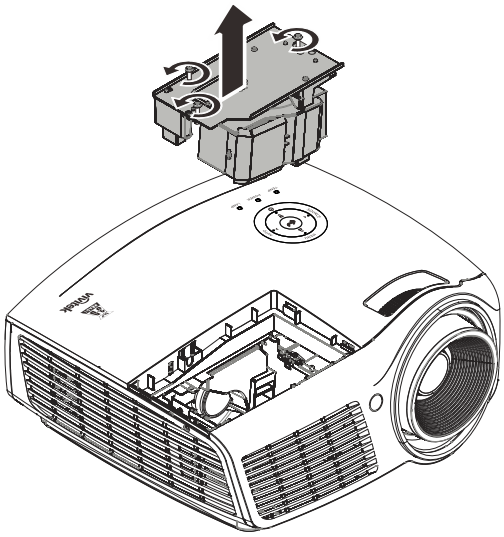

6. Reverse steps 1 to 5 to install the new lamp module. While installing, align the lamp module with the connector and ensure it is level to avoid damage.

Note: The lamp module must sit securely in place and the lamp connector must be connected properly before tightening the screws.

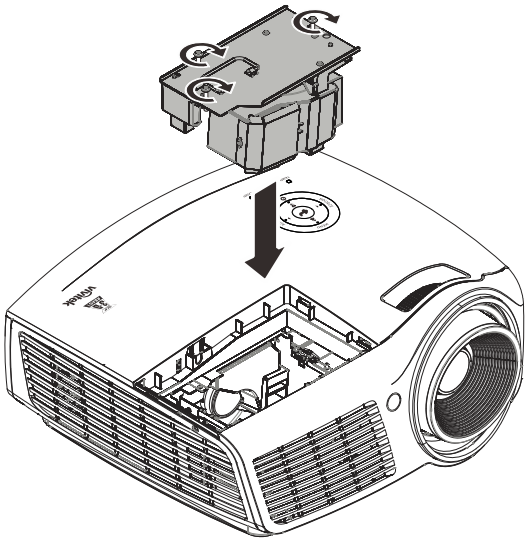

Resetting the Lamp

After replacing the lamp, you should reset the lamp hour counter to zero. Refer to the following:

1. Press the **MENU** button to open the OSD menu.

2. Press the cursor ◄► button to move to the **Installation II** menu. Press the cursor button to move down to **Advanced**.

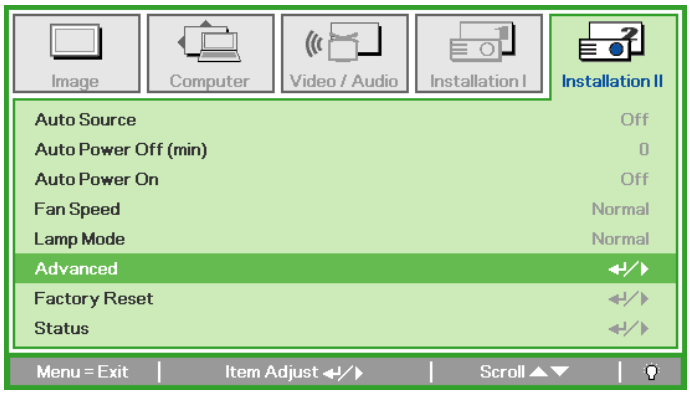

3. Press the cursor ▼▲ button to move down to **Lamp Hour Reset**.

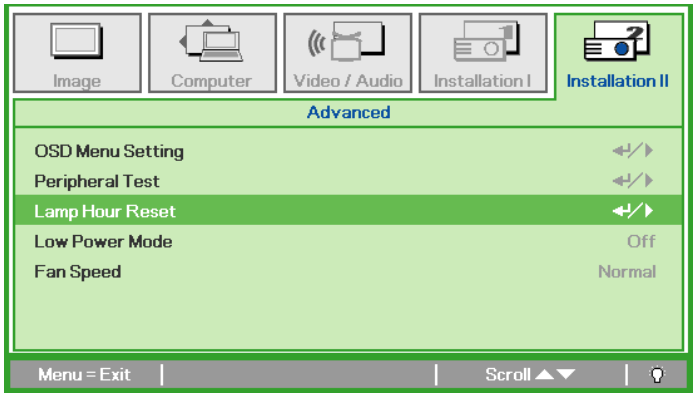

4. Press the cursor ► or Enter button.

   A message screen appears.

5. Press ▼▲◄► buttons to reset the lamp hour.

6. Press the **MENU** button to get back to Installation II.

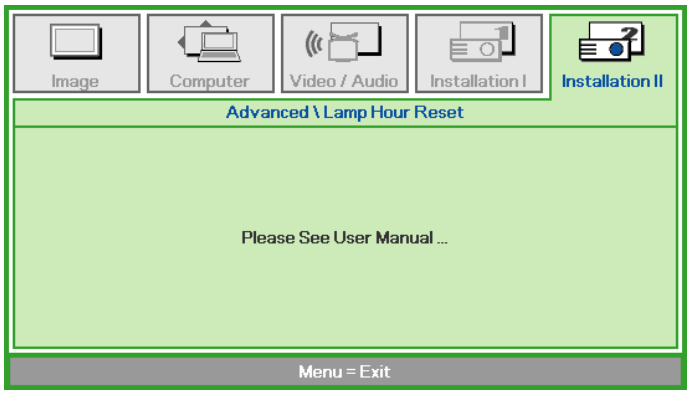

Cleaning the Projector

Cleaning the projector to remove dust and grime will help ensure trouble-free operation.

Warning:
1. *Be sure to turn off and unplug the projector at least 30 minutes before cleaning. Failure to do so could result in a severe burn.*

2. *Use only a dampened cloth when cleaning. Do not allow water to enter the ventilation openings on the projector.*

3. *If a little water gets into the projector interior while cleaning, leave unplugged in a well-ventilated room for several hours before using.*

4. *If a lot of water gets into the projector interior when cleaning, have the projector serviced.*

Cleaning the Lens

You can purchase optic lens cleaner from most camera stores. Refer to the following to clean the projector lens.

1. Apply a little optic lens cleaner to a clean soft cloth. (Do not apply the cleaner directly to the lens.)
2. Lightly wipe the lens in a circular motion.

Caution:
1. *Do not use abrasive cleaners or solvents.*

2. *To prevent discoloration or fading, avoid getting cleaner on the projector case.*

Cleaning the Case

Refer to the following to clean the projector case.

1. Wipe off dust with a clean dampened cloth.
2. Moisten the cloth with warm water and mild detergent (such as used to wash dishes), and then wipe the case.
3. Rinse all detergent from the cloth and wipe the projector again.

Caution:
To prevent discoloration or fading of the case, do not use abrasive alcohol-based cleaners.

Using the Kensington® Lock & Using the Security Bar

Using the Kensington® Lock

If you are concerned about security, attach the projector to a permanent object with the Kensington slot and a security cable.

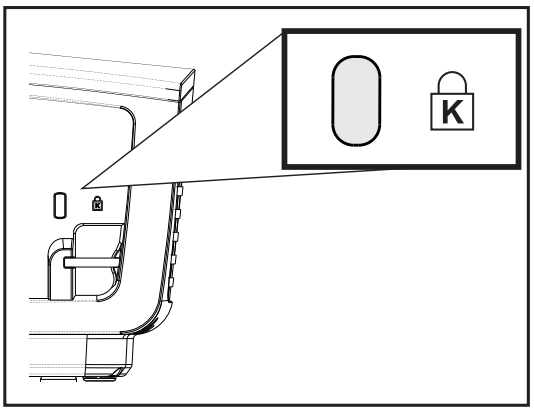

Note:
Contact your vendor for details on purchasing a suitable Kensington security cable.

The security lock corresponds to Kensington's MicroSaver Security System. If you have any comment, contact: Kensington, 2853 Campus Drive, San Mateo, CA 94403, U.S.A. Tel: 800-535-4242, http://www.Kensington.com.

Using the Security Bar

In addition to the password protection function and the Kensington lock, the Security Bar helps protect the projector from unauthorized removal. See the following picture.

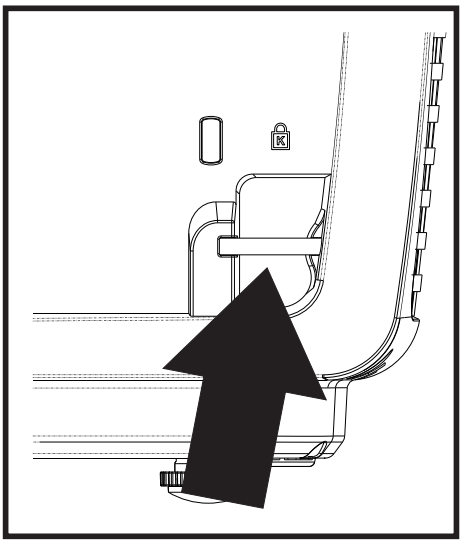

TROUBLESHOOTING

Common problems and solutions

These guidelines provide tips to deal with problems you may encounter while using the projector. If the problem remains unsolved, contact your dealer for assistance.

Often after time spent troubleshooting, the problem is traced to something as simple as a loose connection. Check the following before proceeding to the problem-specific solutions.

- *Use some other electrical device to confirm that the electrical outlet is working.*
- *Ensure the projector is turned on.*
- *Ensure all connections are securely attached.*
- *Ensure the attached device is turned on.*
- *Ensure a connected PC is not in suspending mode.*
- *Ensure a connected notebook computer is configured for an external display.*
  (This is usually done by pressing an Fn-key combination on the notebook.)

Tips for Troubleshooting

In each problem-specific section, try the steps in the order suggested. This may help you to solve the problem more quickly.

Try to pin point the problem and thus avoid replacing non-defective parts.
For example, if you replace batteries and the problem remains, put the original batteries back and go to the next step.

Keep a record of the steps you take when troubleshooting: The information may be useful when calling for technical support or for passing on to service personnel.

LED Error Messages

Error Code Messages	Power LED Green	Lamp LED Red	Temp LED Red
Ready to power on (Standby)	ON	—	—
System Warm up	Flash	—	—
Lamp Lit , System stable	ON	—	—
Cooling	Flashing	—	—
Over Temperature	—	—	ON
Thermal Break Sensor error	4 blinks	—	—
Lamp Fail	—	ON	—
Lamp over voltage	5 blinks	1 blinks	—
Input voltage too high	5 blinks	2 blinks	—
Temp too high	5 blinks	3 blinks	—
Asymmetry detected	5 blinks	4 blinks	—
Lamp under voltage	5 blinks	5 blinks	—
Input voltage too low	5 blinks	6 blinks	—
Axial Fan error	6 blinks	1 blinks	—
Blower Fan error	6 blinks	2 blinks	—
DMD Fan error	6 blinks	3 blinks	—
Case Open	7 blinks	—	—
Color wheel error	9 blinks	—	—
Ballast communication error	10 blinks	1 blinks	—

In the event of an error, please disconnect the AC power cord and wait for one (1) minute before restarting the projector. If the Power or Lamp LEDs are still blinking or any other situation that isn't listed in the chart above, please contact your service center.

Image Problems

Problem: No image appears on the screen

1. Verify the settings on your notebook or desktop PC.
2. Turn off all equipment and power up again in the correct order.

Problem: The image is blurred

1. Adjust the **Focus** on the projector.
2. Press the **Auto** button on the remote control.
3. Ensure the projector-to-screen distance is within the 10-meter (33-feet) specified range.
4. Check that the projector lens is clean.

Problem: The image is wider at the top or bottom (trapezoid effect)

1. Position the projector so it is as perpendicular to the screen as possible.
2. Use the **Keystone** button on the remote control to correct the problem.

Problem: The image is reversed

Check the **Projection** setting on the **Installation I** menu of the OSD.

Problem: The image is streaked

1. Set the **Frequency** and **Tracking** settings on the **Computer** menu of the OSD to the default settings.
2. To ensure the problem is not caused by a connected PC's video card, connect to another computer.

Problem: The image is flat with no contrast

Adjust the **Contrast** setting on the **Image** menu of the OSD.

Problem: The color of the projected image does not match the source image.

Adjust the **Color Temperature** and **Gamma** settings on the **Image** menu of the OSD.

Lamp Problems

Problem: There is no light from the projector

1. Check that the power cable is securely connected.
2. Ensure the power source is good by testing with another electrical device.
3. Restart the projector in the correct order and check that the Power LED is blue.
4. If you have replaced the lamp recently, try resetting the lamp connections.
5. Replace the lamp module.
6. Put the old lamp back in the projector and have the projector serviced.

Problem: The lamp goes off

1. Power surges can cause the lamp to turn off. Re-plug power cord. When the Power LED is on, press the power button.
2. Replace the lamp module.
3. Put the old lamp back in the projector and have the projector serviced.

Remote Control Problems

Problem: The projector does not respond to the remote control

1. Direct the remote control towards remote sensor on the projector.
2. Ensure the path between remote and sensor is not obstructed.
3. Turn off any fluorescent lights in the room.
4. Check the battery polarity.
5. Replace the batteries.
6. Turn off other Infrared-enabled devices in the vicinity.
7. Have the remote control serviced.

Audio Problems

Problem: There is no sound

1. Adjust the volume on the remote control.
2. Adjust the volume of the audio source.
3. Check the audio cable connection.
4. Test the source audio output with other speakers.
5. Have the projector serviced.

Problem: The sound is distorted

1. Check the audio cable connection.
2. Test the source audio output with other speakers.
3. Have the projector serviced.

Having the Projector Serviced

If you are unable to solve the problem, you should have the projector serviced. Pack the projector in the original carton. Include a description of the problem and a checklist of the steps you took when trying to fix the problem: The information may be useful to service personnel. For servicing, return the projector to the place you purchased it.

HDMI Q & A

Q. What is the difference between a "Standard" HDMI cable and a "High-Speed" HDMI cable?

Recently, HDMI Licensing, LLC announced that cables would be tested as Standard or High-Speed cables.

- Standard (or "category 1") HDMI cables have been tested to perform at speeds of 75Mhz or up to 2.25Gbps, which is the equivalent of a 720p/1080i signal.
- High Speed (or "category 2") HDMI cables have been tested to perform at speeds of 340Mhz or up to 10.2Gbps, which is the highest bandwidth currently available over an HDMI cable and can successfully handle 1080p signals including those at increased color depths and/or increased refresh rates from the Source. High-Speed cables are also able to accommodate higher resolution displays, such as WQXGA cinema monitors (resolution of 2560 x 1600).

Q. How do I run HDMI cables longer than 10 meters?

There are many HDMI Adopters working on HDMI solutions that extend a cable's effective distance from the typical 10 meter range to much longer lengths. These companies manufacture a variety of solutions that include active cables (active electronics built into cables that boost and extend the cable's signal), repeaters, amplifiers as well as CAT5/6 and fiber solutions.

Q. How can I tell if a cable is an HDMI certified cable?

All HDMI products are required to be certified by the manufacturer as part of the HDMI Compliance Test Specification. However, there may be instances where cables bearing the HDMI logo are available but have not been properly tested. HDMI Licensing, LLC actively investigates these instances to ensure that the HDMI trademark is properly used in the market. We recommend that consumers buy their cables from a reputable source and a company that is trusted.

For more detail information check http://www.hdmi.org/learningcenter/faq.aspx#49

SPECIFICATIONS

Specifications

Display type	TI DMD 0.65"
Resolution	WXGA 1280x800
Projection distance	1 ~ 10 m
Projection screen size	27" ~ 302"
Projection lens	Manual Focus/Manual Zoom
Zoom ratio	1.1x
Vertical keystone correction	+/- 40 steps
Projection methods	Front, Rear, Desktop/Ceiling (Rear, Front)
Data compatibility	VGA, WXGA, SVGA, XGA, SXGA, WSXGA, UXGA, WUXGA, Mac
SDTV/EDTV/ HDTV	480i, 480p, 720p, 1080i, 1080p
Video compatibility	NTSC/NTSC 4.43, PAL (B/G/H/I/M/N/60), SECAM
H-Sync	31 – 102 kHz
V-Sync	23 – 120 Hz
Safety certification	FCC-B, cUL, UL, CE, C-tick, CCC, KC, CB, PCT, NOM, SASO, PSB
Operation temperature	5° ~ 35°C
Dimensions	285 mm (W) x 261 mm (D) x 130 mm (H)
AC Input	AC Universal 100-240, Typical @ 110VAC (100-240)/+-10%
Power consumption	300W
Stand By	<0.5 watts
Lamp	240W (Normal) / 190W (Eco)
Audio speaker	10W mono speaker
Input Terminals	VGA x 1 (Share with Component)
	Composite video x 1
	PC Audio jack(3.5mm) x 1
	Component (YPbPr RCAx3) x 1
	S-Video x 1
	HDMI x 2
	RCA Stereo Audio LR x 1
Output Terminals	Speaker 10W x 1
	PC Audio jack(3.5mm) x 1
Control Terminals	RS-232C
	USB (service only)
Security	Kensington lock / Security Bar

Note: *For questions regarding product specifications, please contact your local distributor.*

Projection Distance vs. Projection Size

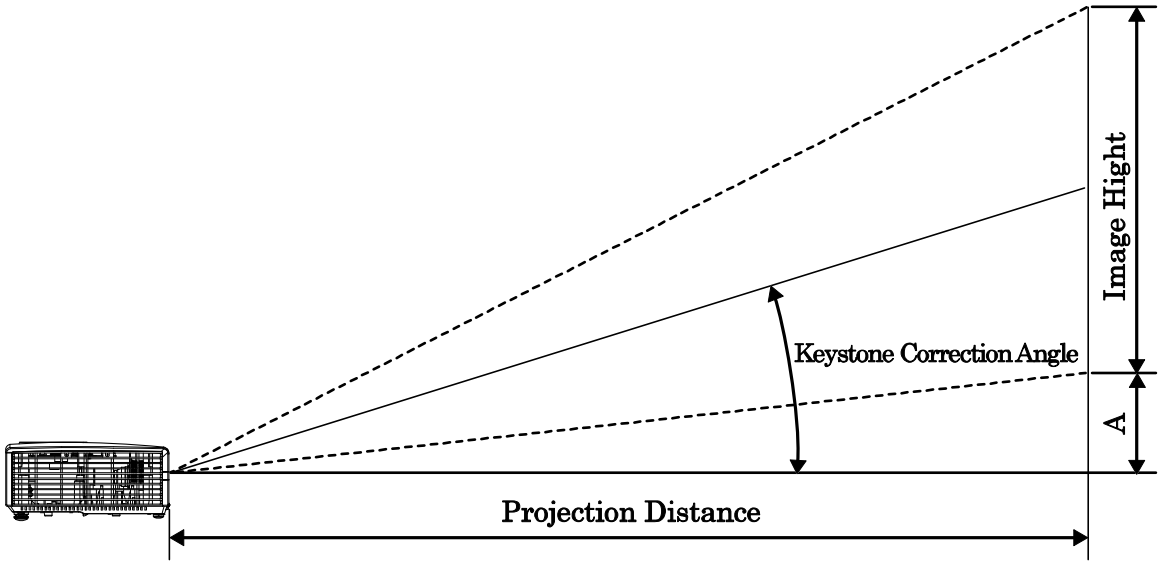

Projection Distance and Size Table

IMAGE DIAGONAL (INCH)	IMAGE WIDTH (INCH)	IMAGE HIGHT (INCH)	PROJECTION DISTANCE (MM) FROM	PROJECTION DISTANCE (MM) TO	OFFSET-A (MM)
60	50.9	31.8	2481.3	2765.6	113.1
70	59.4	37.1	2894.9	3226.6	131.9
72	61.1	38.2	2977.6	3318.8	135.7
80	67.8	42.4	3308.4	3687.5	150.8
84	71.2	44.5	3473.8	3871.9	158.3
90	76.3	47.7	3722.0	4148.4	169.6
96	81.4	50.9	3970.1	4425.0	180.9
100	84.8	53.0	4135.5	4609.4	188.5
120	101.8	63.6	4962.6	5531.3	226.2
135	114.5	71.5	5582.9	6222.7	254.4
150	127.2	79.5	6203.3	6914.1	282.7
200	169.6	106.0	8271.0	9218.8	376.9

Timing Mode Table

SIGNAL	RESOLUTION	H-SYNC (KHZ)	V-SYNC (HZ)	COMPOSITE / S-VIDEO	COMPONENT	RGB	DVI/ HDMI
NTSC	—	15.734	60.0	O	—	—	—
PAL/SECAM	—	15.625	50.0	O	—	—	—
VESA	720 x 400	37.9	85.0	—	—	O	O
	640 x 480	31.5	60.0	—	—	O	O
	640 x 480	37.9	72.0	—	—	O	O
	640 x 480	37.5	75.0	—	—	O	O
	640 x 480	43.3	85.0	—	—	O	O
	800 x 600	35.2	56.0	—	—	O	O
	800 x 600	37.9	60.0	—	—	O	O
	800 x 600	48.1	72.0	—	—	O	O
	800 x 600	46.9	75.0	—	—	O	O
	800 x 600	53.7	85.0	—	—	O	O
	1024 x 768	48.4	60.0	—	—	O	O
	1024 x 768	56.5	70.0	—	—	O	O
	1024 x 768	60.0	75.0	—	—	O	O
	1024 x 768	68.7	85.0	—	—	O	O
	1280 x 800	49.7	59.8	—	—	O	O
	1280 x 800	62.8	74.9	—	—	O	O
	1280 x 800	71.6	84.8	—	—	O	O
	1280 x 1024	63.98	60.0	—	—	O	O
	1280 x 1024	79.98	75.0	—	—	O	O
	1280 x 1024	91.10	85.0	—	—	O	O
	1280 x 960	60.0	60.0	—	—	O	O
	1280 x 960	85.9	85.0	—	—	O	O
	1400 x 1050	65.3	60.0	—	—	O	O
	1440 x 900	70.6	75.0	—	—	O	O
	1440 x 900	55.6	60.0	—	—	O	O

SIGNAL	RESOLUTION	H-SYNC (KHZ)	V-SYNC (HZ)	COMPOSITE / S-VIDEO	COMPONENT	RGB	DVI/ HDMI
	1600 x 1200	75.0	60.0	—	—	O	O
Apple Mac	640 x 480	35.0	66.68	—	—	O	O
	832 x 624	49.725	74.55	—	—	O	O
	1024 x 768	60.24	75.0	—	—	O	O
	1152 x 870	68.68	75.06	—	—	O	O
SDTV	480i	15.734	60.0	—	O	—	O
	576i	15.625	50.0	—	O	—	O
EDTV	480p	31.469	60.0	—	O	—	O
	576p	31.25	50.0	—	O	—	O
HDTV	720p	37.5	50.0	—	O	—	O
	720p	45.0	60.0	—	O	—	O
	1080i	33.8	60.0	—	O	—	O
	1080i	28.1	50.0	—	O	—	O
	1080p	67.5	60.0	—	O	—	O
	1080p	56.3	50.0	—	O	—	O

O: Frequency supported

—: Frequency not supported

* : Displayable level

Table of Supported Frequency For 2D®3D mode

The unit automatically determines PC signals to select the appropriate resolution.

Some signals may require manual adjustment.

SIGNAL	2D Resolution	H-SYNC (KHz)	V-SYNC (Hz)	HDMI (Digital)
VESA	640 x 480	31.5	60	○
	800 x 600	37.9	60.3	○
	1024 x 768	48.4	60	○
	1280 x 720	45	60	○
	1280 x 768	47.8	60	○
	1280 x 800	49.7	60	○
	1280 x 1024	64	60	○
	1400 x 1050	65.3	60	○
	1440 x 900	55.9	60	○
SDTV	480i	15.734	60	○
	576i	15.625	50	○
EDTV	576p	31.3	50	○
	480p	31.5	60	○
HDTV	720p	37.5	50	○
	720p	45	60	○
	1080i	33.8	60	○
	1080i	28.1	50	○
	1080p	67.5	60	○
	1080p	56.3	50	○

○ : Supported frequency

Table of Supported Frequency For 3D®3D mode

The unit automatically determines PC signals to select the appropriate resolution.

Some signals may require manual adjustment.

3D RESOLUTION	HDMI	3D FORMAT
800 x 600 @ 120Hz	○	Frame sequential
1024 x 768 @ 120Hz	○	Frame sequential
1280 x 720 @ 120Hz	○	Frame sequential
HD1080p24FP	○	Frame packing
SD720p60FP	○	Frame packing
SD720p50FP	○	Frame packing
HD1080i50SBSH	○	Side-by-side
SD720p60SBSH	○	Side-by-side
SD720p50SBSH	○	Side-by-side

○ : Supported frequency

Projector Dimensions

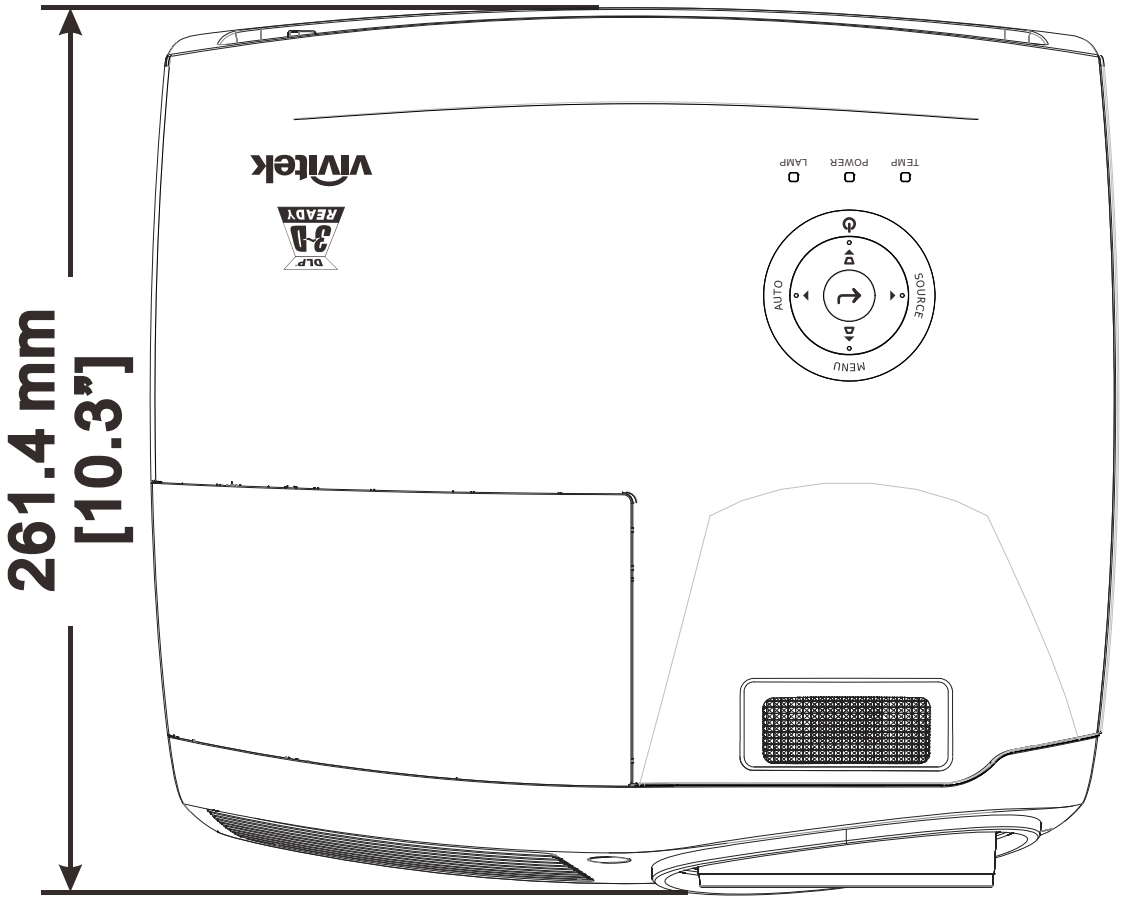

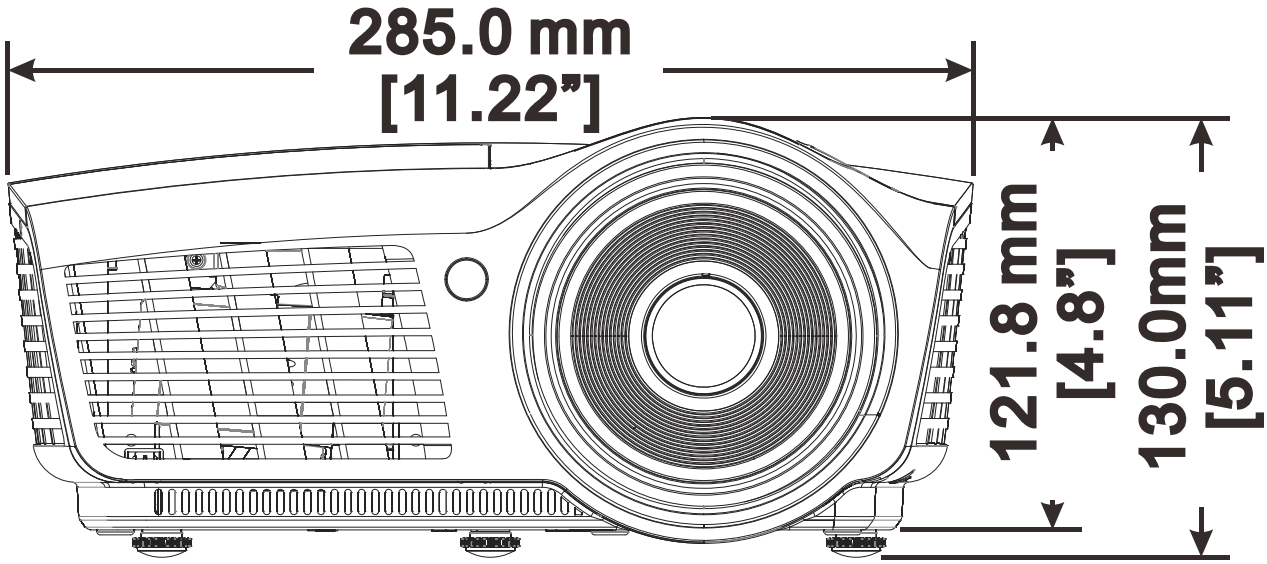

REGULATORY COMPLIANCE

FCC Warning

This equipment has been tested and found to comply with the limits for a Class B digital device pursuant to Part 15 of the FCC Rules. These limits are designed to provide reasonable protection against harmful interference when the equipment is operated in a commercial environment.

This equipment generates, uses, and can radiate radio frequency energy and, if not installed and used in accordance with the instruction manual, may cause harmful interference to radio communications. Operation of this equipment in a residential area is likely to cause harmful interference in which case the user will be required to correct the interference at his/her own expense.

Changes or modifications not expressly approved by the parties responsible for compliance could void the user's authority to operate the equipment.

Canada

This class B digital apparatus complies with Canadian ICES-003.

Safety Certifications

FCC-B, cUL, UL, CE, C-tick, CCC, KC, CB, PCT, NOM, SASO, PSB.