myprojectorlamps.com

The most trusted, dependable name in projector lamp sales.

http://www.myprojectorlamps.com

http://www.myprojectorlamps.ca

http://www.myprojectorlamps.eu

The following projector manual has not been modified or altered in any way.

TOSHIBA

OWNER'S MANUAL

3LCD DATA PROJECTOR

TLP450U
TLP451U *(WITH DOCUMENT IMAGING CAMERA)*
TLP650U
TLP651U *(WITH DOCUMENT IMAGING CAMERA)*
TLP650A
TLP651A *(WITH DOCUMENT IMAGING CAMERA)*
TLP470U
TLP471U *(WITH DOCUMENT IMAGING CAMERA)*
TLP670U
TLP671U *(WITH DOCUMENT IMAGING CAMERA)*

SAFETY PRECAUTIONS

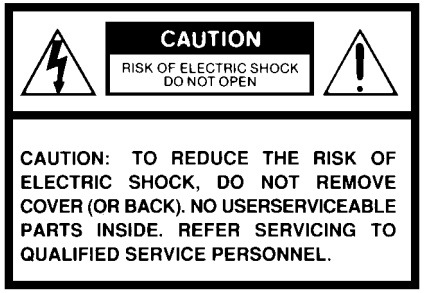

The lightning flash with arrowhead symbol, within an equilateral triangle, is intended to alert the user to the presence of uninsulated “dangerous voltage” within the product’s enclosure that may be of sufficient magnitude to constitute a risk of electric shock to persons.

The exclamation point within an equilateral triangle is intended to alert the user to the presence of important operating and maintenance (servicing) instructions in the literature accompanying the appliance.

WARNING: TO REDUCE THE RISK OF FIRE OR ELECTRIC SHOCK, DO NOT EXPOSE THIS APPLIANCE TO RAIN OR MOISTURE. DANGEROUS HIGH VOLTAGES ARE PRESENT INSIDE THE ENCLOSURE. DO NOT OPEN THE CABINET. REFER SERVICING TO QUALIFIED PERSONNEL ONLY.

FCC Radio Frequency Interference Statement

Note: This equipment has been tested and found to comply with the limits for a Class A digital device, pursuant to part 15 of the FCC Rules. These limits are designed to provide reasonable protection against harmful interference when the equipment is operated in a commercial environment. This equipment generates, uses, and can radiates radio frequency energy and, if not installed and used in accordance with the instruction manual, may cause harmful interference to radio communications. Operation of this equipment in a residential area is likely to cause harmful interference in which case the user will be required to correct the interference at his own expense.

WARNING: Changes or modifications made to this equipment, not expressly approved by Toshiba, or parties authorized by Toshiba, could void the user’s authority to operate the equipment.

Notice: This Class A digital apparatus complies with Canadian ICES-003.
Cet appareil numérique de la classe A est conforme à la norme NMB-003 du Canada.

CAUTION: Laser beam is emitted when the laser button of the remote control is pressed. Do not look from the front of the remote control. Do not face toward a person or to a mirror.

IMPORTANT PRECAUTIONS

Save Original Packing Materials

The original shipping carton and packing materials will come in handy if you ever have to ship your LCD projector. For maximum protection, repack the set as it was originally packed at the factory.

Avoid Volatile Liquid

Do not use volatile liquids, such as an insect spray, near the unit. Do not leave rubber or plastic products touching the unit for a long time. They will mar the finish.

Moisture Condensation

Never operate this unit immediately after moving it from a cold location to a warm location. When the unit is exposed to such a change in temperature, moisture may condense on the crucial internal parts. To prevent the unit from possible damage, do not use the unit for at least 2 hours when there is an extreme or sudden change in temperature.

In the spaces provided below, record the Model and Serial No. located at the rear of your LCD projector.

Model No. _____ Serial No. _____

Retain this information for future reference.

IMPORTANT SAFETY INSTRUCTIONS

CAUTION: PLEASE READ AND OBSERVE ALL WARNINGS AND INSTRUCTIONS GIVEN IN THIS OWNER'S MANUAL AND THOSE MARKED ON THE UNIT. RETAIN THIS BOOKLET FOR FUTURE REFERENCE.

This set has been designed and manufactured to assure personal safety. Improper use can result in electric shock or fire hazard. The safeguards incorporated in this unit will protect you if you observe the following procedures for installation, use and servicing. This unit is fully transistorized and does not contain any parts that can be repaired by the user.

DO NOT REMOVE THE CABINET COVER, OR YOU MAY BE EXPOSED TO DANGEROUS VOLTAGE. REFER SERVICING TO QUALIFIED SERVICE PERSONNEL ONLY.

1. Read Owner's Manual

After unpacking this product, read the owner's manual carefully, and follow all the operating and other instructions.

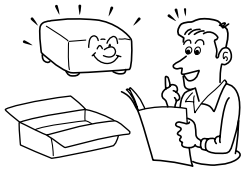

2. Power Sources

This product should be operated only from the type of power source indicated on the marking label. If you are not sure of the type of power supply to your home, consult your product dealer or local power company.
For products intended to operate from battery power, or other sources, refer to the operating instructions.

3. Source of Light

Do not look into the lens while the lamp is on. The strong light from the lamp may cause damage to your eyes or sight.

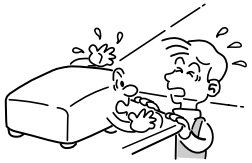

4. Ventilation

Openings in the cabinet are provided for ventilation and to ensure reliable operation of the product and to protect it from overheating, and these openings must not be blocked or covered. The openings should never be blocked by placing the product on a bed, sofa, rug or other similar surface. This product should not be placed in a built-in installation such as a bookcase or rack unless proper ventilation is provided or the manufacturer's instructions have been adhered to.

IMPORTANT SAFETY INSTRUCTIONS

5. Heat

The product should be situated away from heat sources such as radiators, heat registers, stoves, or other products (including amplifiers) that produce heat.

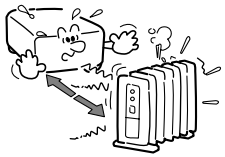

6. Water and Moisture

Do not use this product near water – for example, near a bath tub, wash bowl, kitchen sink, or laundry tub; in a wet basement; or near a swimming pool and the like.

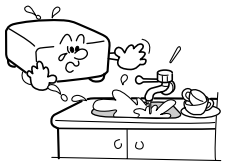

7. Cleaning

Unplug this product from the wall outlet before cleaning. Do not use liquid cleaners or aerosol cleaners. Use a damp cloth for cleaning.

8. Power-Cord Protection

Power-supply cords should be routed so that they are not likely to be walked on or pinched by items placed upon or against them, paying particular attention to cords at plugs, convenience receptacles, and the point where they exit from the product.

9. Overloading

Do not overload wall outlets; extension cords, or integral convenience receptacles as this can result in a risk of fire or electric shock.

10. Lightning

For added protection for this product during storm, or when it is left unattended and unused for long periods of time, unplug it from the wall outlet.
This will prevent damage to the product due to lightning and power-line surges.

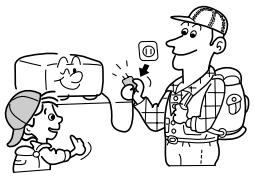

IMPORTANT SAFETY INSTRUCTIONS

11. Object and Liquid Entry

Never push objects of any kind into this product through openings as they may touch dangerous voltage points or short-out parts that could result in a fire or electric shock. Never spill liquid of any kind on the product.

12. Do not place the product vertically

Do not use the product in the upright position to project the pictures at the ceiling, or any other vertical positions. It may fall down and dangerous.

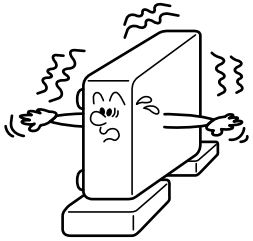

13. Stack Inhibited

Do not stack other equipment on this product or do not place this product on the other equipment.
Top and bottom plates of this product develops heat and may give some undesirable damage to other unit.

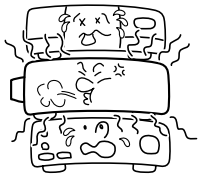

14. Attachments

Do not use attachments not recommended by the product manufacturer as they may cause hazards.

15. Accessories

Do not place this product on an unstable cart, stand, tripod, bracket, or table. The product may fall, causing serious injury to a child or adult, and serious damage to the product. Use only with a cart, stand, tripod, bracket, or table recommended by the manufacturer, or sold with the product. Any mounting of the product should follow the manufacturer's instructions, and should use a mounting accessory recommended by the manufacturer.
A product and cart combination should be moved with care. Quick stops, excessive force, and uneven surfaces may cause the product and cart combination to overturn.

IMPORTANT SAFETY INSTRUCTIONS

16. Damage Requiring Service

Unplug this product from the wall outlet and refer servicing to qualified service personnel under the following conditions:

a) When the power-supply cord or plug is damaged.

b) If liquid has been spilled, or objects have fallen into the product.

c) If the product has been exposed to rain or water.

d) If the product does not operate normally by following the operating instructions. Adjust only those controls that are covered by the operating instructions as an improper adjustment of other controls may result in damage and will often require extensive work by a qualified technician to restore the product to its normal operation.

e) If the product has been dropped or damaged in any way.

f) When the product exhibits a distinct change in performance – this indicates a need for service.

17. Servicing

Do not attempt to service this product yourself as opening or removing covers may expose you to dangerous voltage or other hazards. Refer all servicing to qualified service personnel.

18. Replacement Parts

When replacement parts are required, be sure the service technician has used replacement parts specified by the manufacturer or have the same characteristics as the original part. Unauthorized substitutions may result in fire, electric shock, or other hazards. (Replacement of the lamp only should be made by users.)

19. Safety Check

Upon completion of any service or repairs to this product, ask the service technician to perform safety checks to determine that the product is in proper operating condition.

20. Do not get your hands between the camera arm and the main unit when setting the camera arm back in its original position.

To avoid injury, be careful not to get your hands caught when setting the camera arm back in its original position. Families with children should be particularly careful.

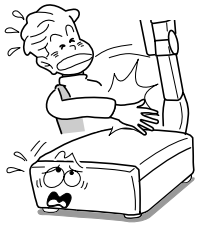

IMPORTANT SAFETY INSTRUCTIONS

21. Do not carry by the camera arm.

Do not carry the projector by the camera arm.
Doing so can result in damage or injury.

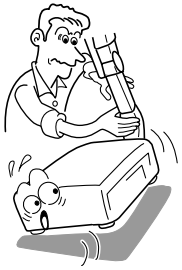

22. Do not leave documents on the unit for long periods of time while using the document imaging function.

Do not leave texts, papers or other documents for projection on the unit for long periods of time. The heat could erase the letters on a thermal paper.

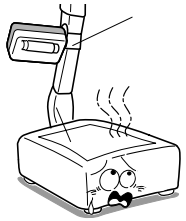

23. Do not move the projector while the arm is still erect.

Always store the arm back in position when moving the projector. Otherwise injury or damage may result.

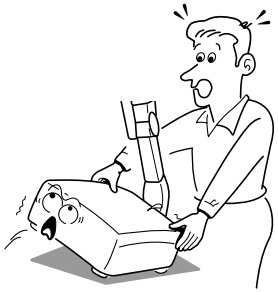

24. Do not look into the arm light while it is lit.

The strong light may cause damage to your eyes or sight.

25. If glass components, including lens and lamp, should break, contact your dealer for repair service.

This product incorporates glass components, including a lens and a lamp. If such parts should break, please handle with care to avoid injury and contact your dealer for repair service. The broken pieces of glass may cause to injury.

Power supply cord selection

If your line voltage is 220 to 240, use one of the following types of cable.

Plug configuration	Plug type	Line voltage
	EURO 240V 10 – 15A	220 – 240V
	UK 240V 6A	200 – 240V
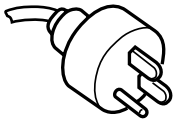	Australian 240V 10A	200 – 240V
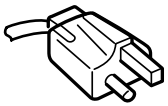	North American 240V 15A	200 – 240V
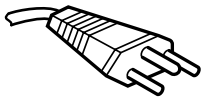	Switzerland 240V 6A	200 – 240V

Contents

Before use

SAFETY PRECAUTIONS 2
IMPORTANT PRECAUTIONS 3
IMPORTANT SAFETY INSTRUCTIONS 4
Power supply cord selection 9
Part names and functions 11

Connections and installation

Connections 16
Projector placement 18

Operations

Picture projection 21
Operating the computer by the remote control 25

Adjustments

Setting and adjustments on the menu 27
Initial settings – Default 28
Keystone correction – Keystone 30
Projection adjustments – Image 31
Picture adjustments – Picture 32
Sound adjustments – Audio 33
Saving data – Save 34

Camera

Part names and functions of document imaging camera 35
Picture projection with the document imaging camera 37
Overlaying projection 39

Maintenance

Trouble indications 40
Air filter, lens and main unit cleaning 41
Lamp replacement 42

Others

Before calling service personnel 43
Input signal 45
Adjustments with RS-232C 49
Specifications 51
LIMITED WARRANTY 53

Part names and functions

Main unit

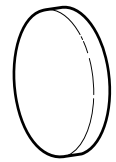

Lens cover

Projection lens

Exhaust holes

Foot adjuster release button 20

Foot adjuster 20

Zooming ring 21

Focusing ring 21

Intake holes

Infrared remote sensor

Control panel

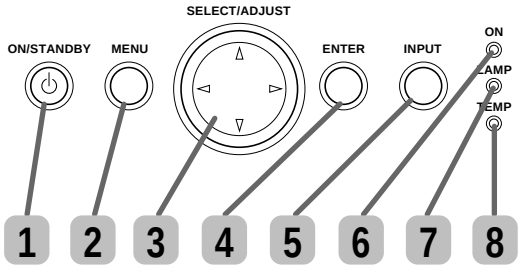

1 ON/STANDBY button 21
To turn the projector on or off.

2 MENU button 27
To display or close the menu.

3 SELECT/ADJUST button 28
(▲ / ▼ / ◀ / ▶)
To select items or adjust values on the menu.

4 ENTER button 30
To enter your selection on the menu.

5 INPUT button 21
To select the input source.

6 ON indicator 21 40

7 LAMP indicator 21 40

8 TEMP indicator 40

(Continued)

(Continued)

Left side

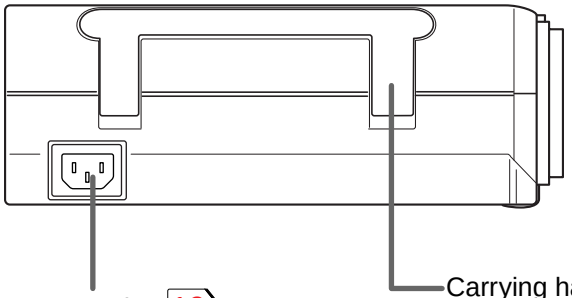

Rear side

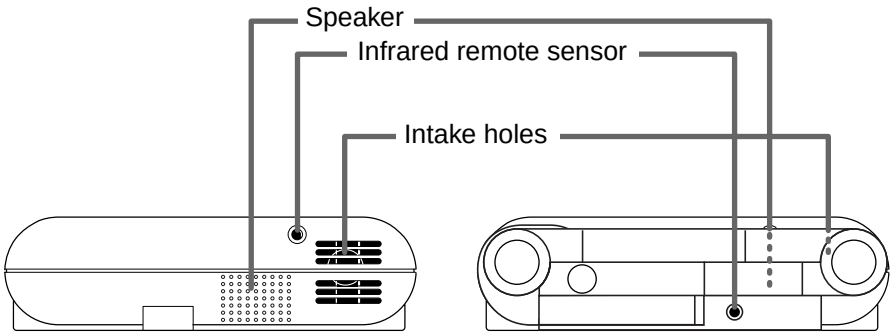

Document imaging camera model

Right side

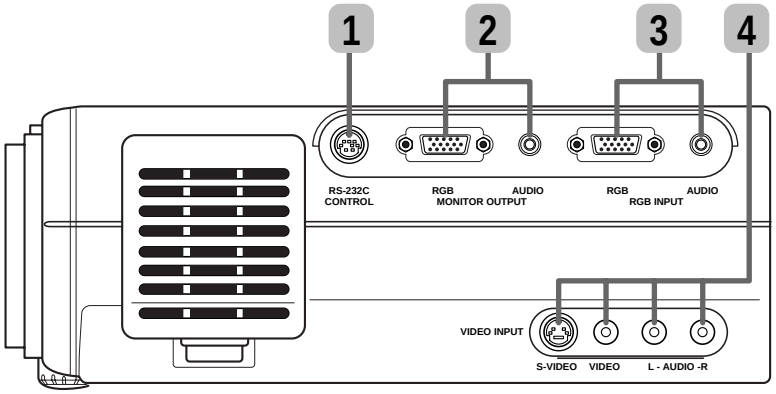

1 CONTROL connector 17 49
To connect a computer to control the projector.

2 MONITOR OUTPUT connectors
(RGB output, AUDIO output) 17
To connect to a monitor or audio equipment.

3 RGB INPUT connectors (RGB input, AUDIO input) 16
To connect a computer, etc.

4 VIDEO INPUT connectors
(S-VIDEO input, VIDEO input, AUDIO input) 17
To connect a video equipment, etc.

(Continued)

(Continued)

Remote control

Caution - use of controls or adjustments or performance of procedures other than those specified herein may result in hazardous radiation exposure.

Location of the labels

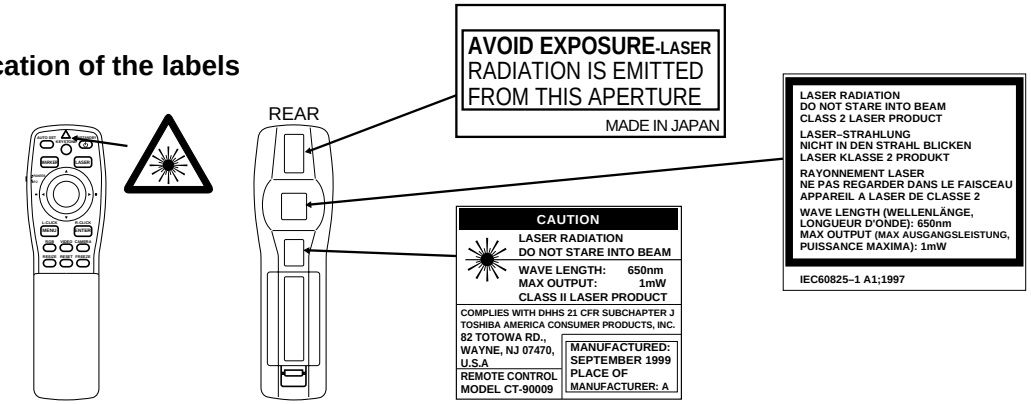

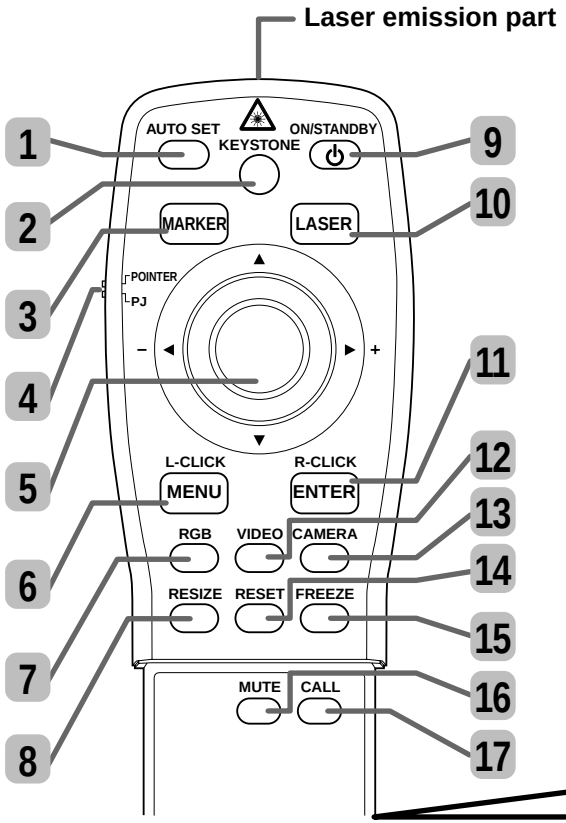

* Functions when the POINTER/PJ selector is set to "POINTER".

1 AUTO SET button 23

To adjust the image automaticcally.

2 KEYSTONE button 22

To correct the keystone distortion of the picture automatically.

3 MARKER button

To display a marker on the screen. Each time the button is pressed, the marker changes the shape, and finally disappears.

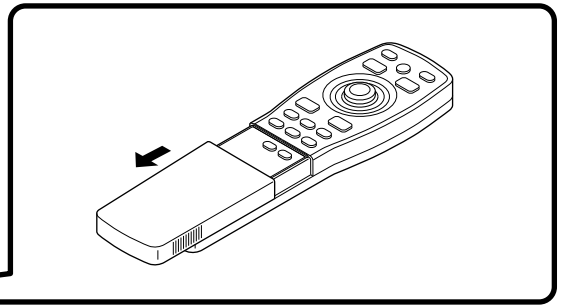

4 POINTER/PJ selector 26

To switch the operation modes of the remote control.
POINTER: To operate a computer. (The supplied REMOTE MOUSE RECEIVER should be connected to the computer.)
PJ: To operate the projector.

5 ▲, ▼, ◀ (–), ▶ (+) button 28/ Pointer control* 26

- To select items or adjust values on the menu.
- To shift a picture after changing its size with the RESIZE button.
- To move the marker displayed with the MARKER button.
- To move the pointer of the computer.*
- To substitute for the L-CLICK button by pressing the center.*

(Continued)

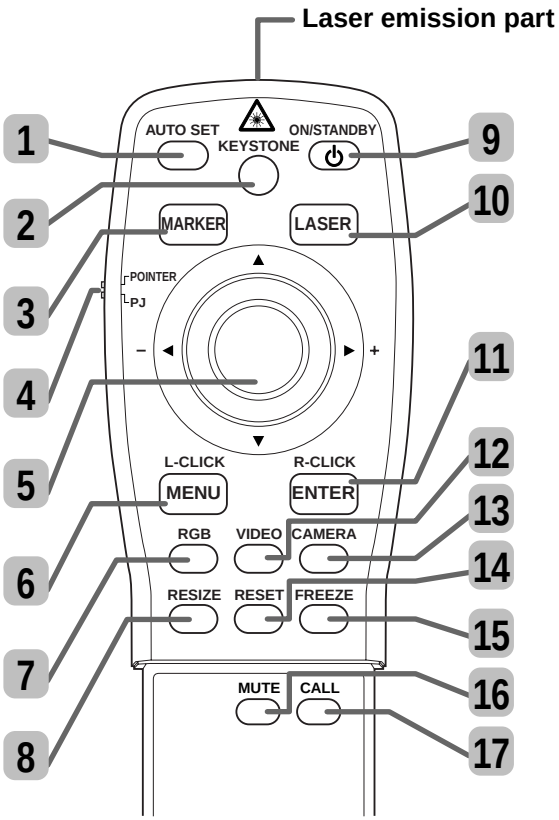

(Continued)

6 L-CLICK button* 26 / MENU button 28
- To left-click.*
- To display or close the menu.

7 RGB button 21
To select the RGB input.

8 RESIZE button 24
To change the picture size.

9 ON/STANDBY button 21
To turn the projector on or off.

10 LASER button
To display the laser pointer by pointing the laser emission part toward the screen.

11 R-CLICK button* 26 / ENTER button 28
- To right-click.*
- To enter your selection on the menu.

12 VIDEO button 21
To select the video input.

13 CAMERA button (for document imaging camera model only) 37
To select the camera input.

14 RESET button 29
To restore the settings and adjustments to the default.

15 FREEZE button 23
To freeze the picture.

16 MUTE button 23
To cut off the picture and sound temporarily.

17 CALL button 23
To display the current input source and signal status information.

Installing batteries

1) Open the cover.

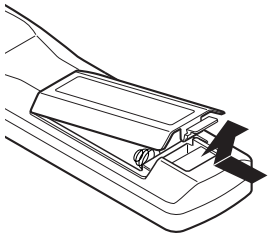

2) Install the batteries.
Make sure that the +/– polarities match the illustration in the compartment.

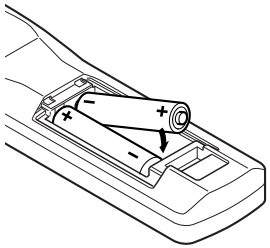

3) Attach the cover.

(Continued)

(Continued)

Notes

Using batteries incorrectly can cause them to leak or burst. Strictly observe the following.

- Install the batteries with their + and – ends facing correctly.
- Do not charge, heat, disassemble, or short the batteries or throw them into a fire.
- Do not leave exhausted batteries in the remote control.
- Do not mix different types of batteries or new and old batteries.
- When you will not be using the remote control for a prolonged period, take the batteries out of the remote control.
- When the remote control stops working or only works from very close distance, replace all the batteries with new ones.
- When replacing the batteries, use a more longer life alkaline batteries.
- If a battery leaks, carefully wipe off any residue inside the battery case before loading new batteries.

Remote control operation

Point the remote control at the infrared remote sensor and press a button.

Front side

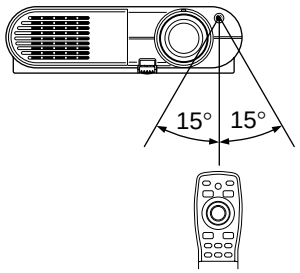

Rear side

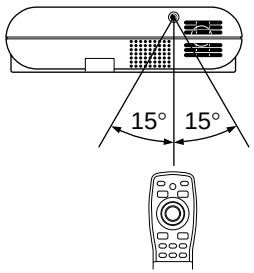

Rear side (document imaging camera model)

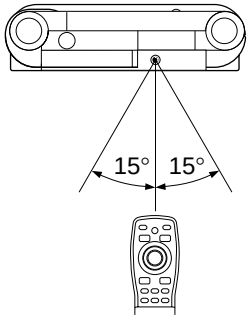

Distance : within about 5 meters from the front of the remote sensor.

Angle : within about 15° of the remote sensor in every direction.

Notes

- Do not leave the remote control unit turned the face down as it may make the buttons pressed to hasten the battery end.
- The remote control may not operate when there is sunlight or other strong light such as a fluorescent lamp shining on the remote sensor.
- Operate the remote control from a position where the remote sensor is visible.
- Do not drop the remote control or otherwise jolt it.
- Keep the remote control out of locations with excessively high temperature or humidity.
- Do not get water on the remote control or place wet objects on it.
- Do not disassemble the remote control.
- Under unusual circumstances the remote control may not operate well due to the location being used or the surroundings. At such times, change the direction of the remote control to the projector and retry the operation.

Connections

Connecting an IBM PC or compatible computer (DOS/V)

Check that the power for the projector and computer is off before connecting the cables.

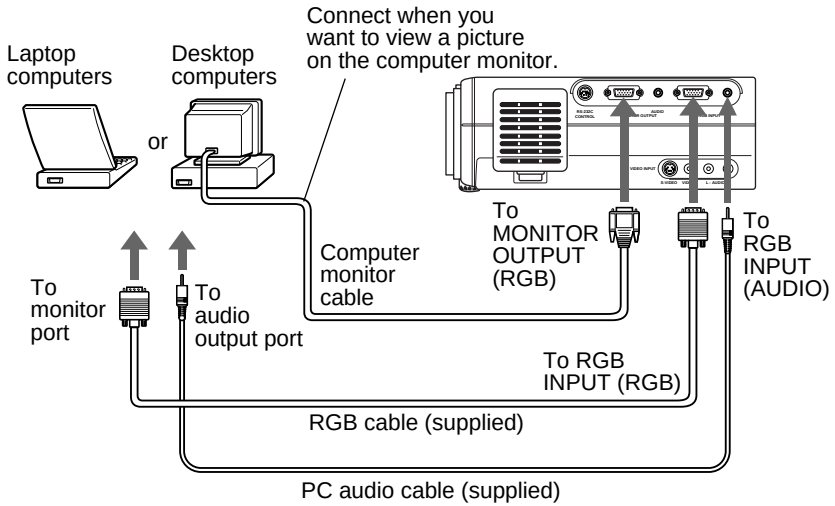

Notes

- The projector cannot be connected to a computer that does not have an analog RGB output terminal. For details, refer to the computer manual.
- You may not be able to connect some computers to the projector. For details, consult the dealer.
- If NTSC/PAL/SECAM signals are input to the RGB INPUT connector, they cannot be displayed. (Input NTSC/PAL/SECAM signals to the VIDEO INPUT jack.)

Connecting a Macintosh computer

- Attach the supplied adapter for Macintosh computers.
- Check that the power for the projector and computer is off before connecting the cables.

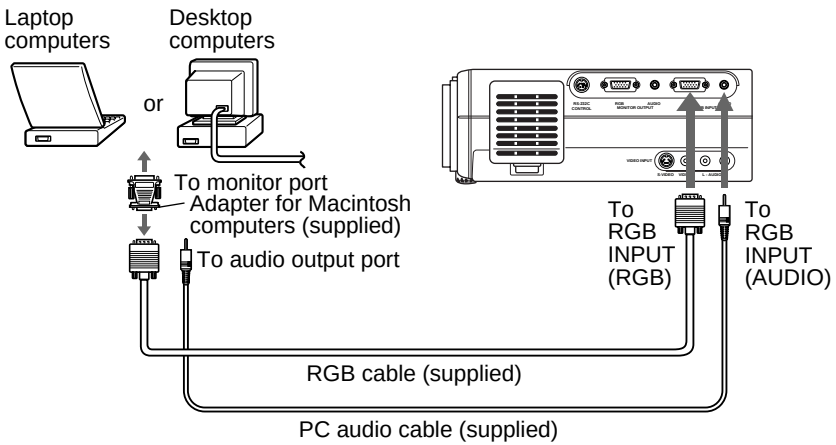

Notes

- The projector cannot be connected to a computer that does not have an analog RGB output terminal. For details, refer to the computer manual.
- You may not be able to connect some computers to the projector. For details, consult the dealer.
- The adapter for Macintosh computers is conformable to MULTIPLE SCAN 21.

(Continued)

(Continued)

Connecting video equipment

Check that the power for the projector and computer is off before connecting the cables.

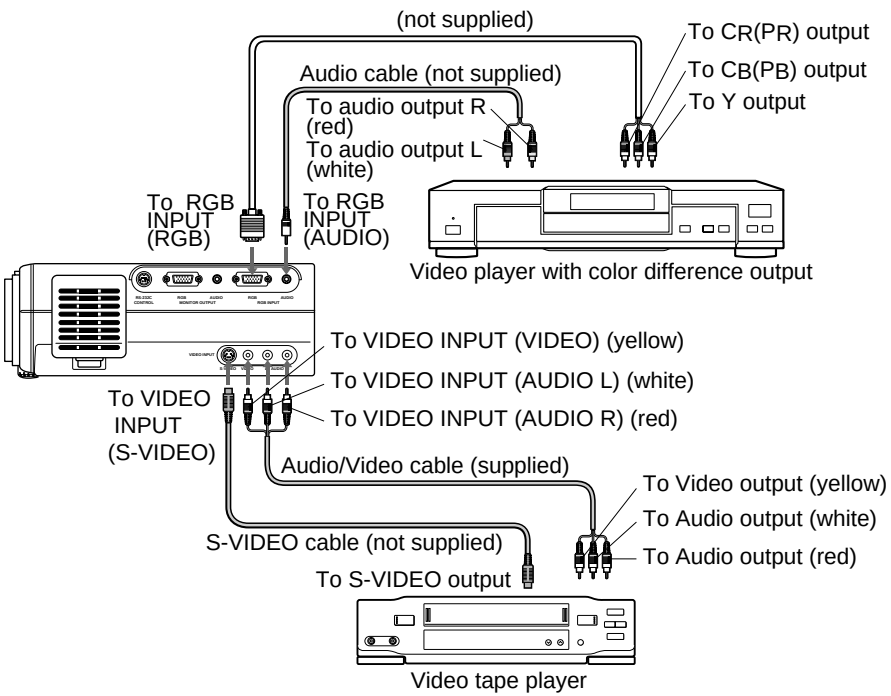

Note

Signal input to the S-VIDEO jack takes priority over that to the VIDEO jack.

Output terminals

Check that the power for the projector and computer is off before connecting the cables.

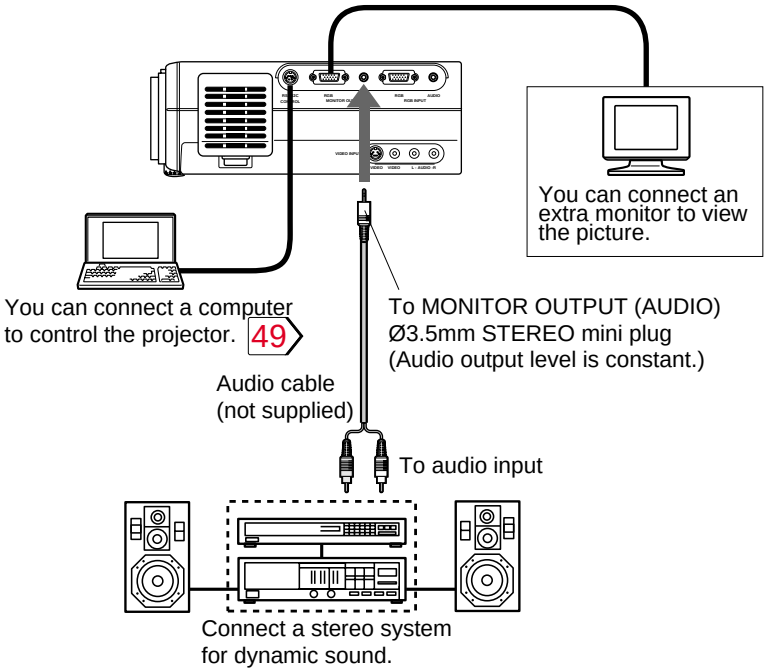

Notes

- Sound of the source which you select is output to the connected stereo system, etc.
- The MONITOR OUTPUT (RGB output) connector always sends out a signal which is input to the RGB INPUT (RGB input) connector regardless of your source selection.
- Even while the projector is in standby mode, the MONITOR OUTPUT (RGB output) connector continues its output.

Projector placement

There are four ways of installing this projector as shown right. This section explains the standard case of the floor-mounted front projection.

CAUTION
- When a ceiling mount is required, please consult with the dealer.
- When carrying the unit, always handle the carrying handle.

Preparation
- Select a room that can be darkened.
- Refer to the table on the next page 19 for the screen size and required distance.

Floor-mounted front projection

Viewing a picture projected on the front of the screen from a floor.

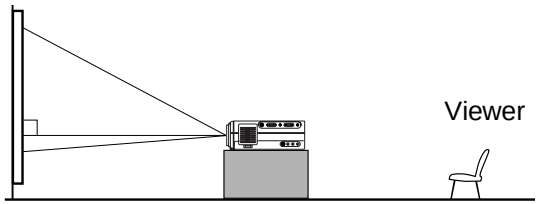

Floor-mounted rear projection

Viewing a picture projected through the back of the screen from a floor installation.

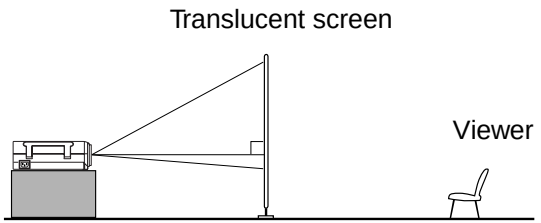

Ceiling-mounted front projection

(The document imaging camera model could not be mounted on the ceiling.)

Viewing a picture projected on the front of the screen from a ceiling installation.

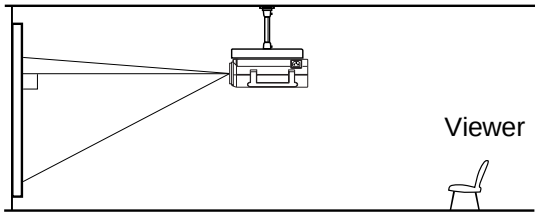

Ceiling-mounted rear projection

(The document imaging camera model could not be mounted on the ceiling.)

Viewing a picture projected through the back of the screen from a ceiling installation.

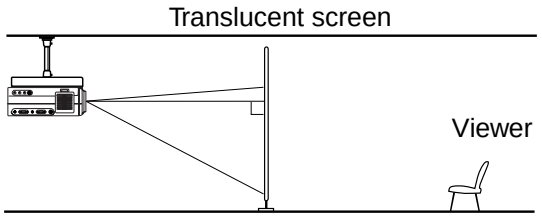

- When installed the projector in the way except the floor-mounted front projection, make the setting of the projecting orientation on the menu. 28

(Continued)

(Continued)

1 Place the projector on a steady, level surface such as a table.

Point the projector squarely at the screen for the best possible picture.

Top view

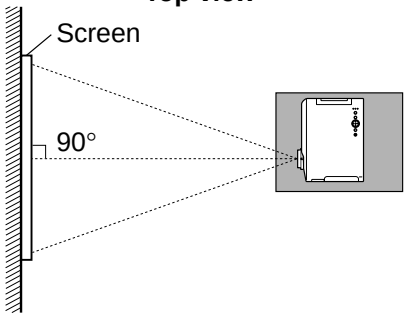

Point the lens straight at the center of the screen as above.

Side view

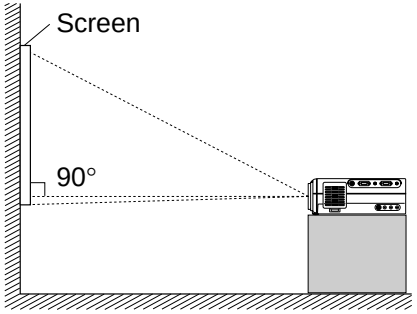

Place the projector horizontally so that the projecting light hits the screen squarely.

2 Adjust the distance between the lens and the screen.

The projection size depends on the distance between the lens and the screen.

Adjust the projection size by changing the distances as shown below.

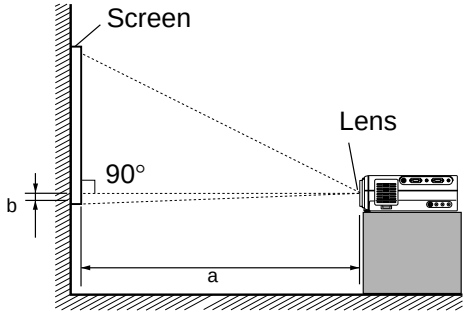

a: Distance between the lens and the screen

b: Distance between the lens height and the bottom of projection area

Screen size (inches)	a (m) Minimum (WIDE)	a (m) Maximum (TELE)	b (cm)
23	–	1.132	4
40	1.56	2.017	6
60	2.373	3.059	9
80	3.186	4.1	12
100	3.999	5.142	15
150	6.031	7.746	23
200	8.064	10.35	30
250	10.096	–	38

• The values are approximations.

3 Connect the power cord.

- Insert one end in the AC IN socket on the projector.
- Insert the other end in a wall outlet.

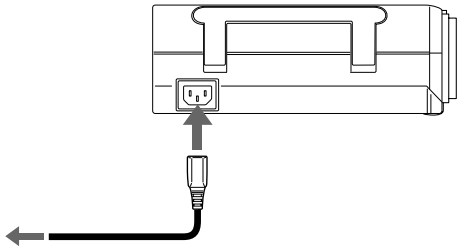

To a wall outlet.

The ON indicator lights in orange and the projector turns to standby mode.

4 Take off the lens cover.

(Continued)

(Continued)

Notes

- When the projector is moved from a cold location to a warm location, or when the ambient temperature in the projection room has risen suddenly, moisture may condense on the lens or the mirror to blur the projected pictures. In such a case, leave the projector for an adequate time (1 to 2 hours, depending on the room's condition) before using it so it adjusts to the ambient temperature.
- If the screen is exposed to direct sunlight or other strong light, the projected picture becomes too faint to see. Shut out the light with curtains or other means.
- If the screen and the projector are not installed properly, the projected picture may be distorted.
- If the projector is tilted, the picture may be distorted. To obtain the best possible picture, place the projector so it faces the screen squarely.

How to use the foot adjuster

The tilt of the projector can be adjusted using the foot adjuster.

1) Lift the front of the projector until a tilt angle desired is obtained and hold down the foot adjuster release button.

   The foot adjuster will stretch.

   Release the button to lock in position.

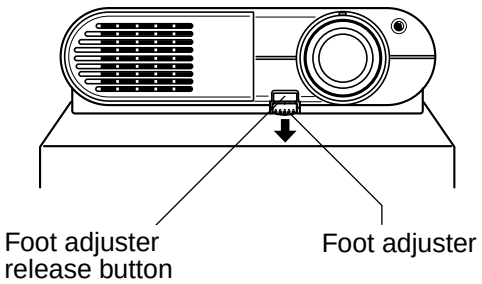

2) Turn the foot adjuster to make fine adjustment of the height.

   Turn clockwise to lift up.

   Turn counterclockwise to lower.

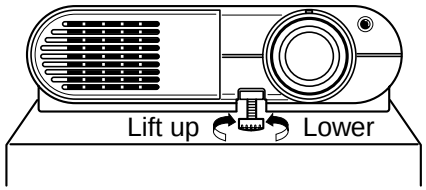

3) To put the foot adjuster back, hold down the foot adjuster release button and lower the front slowly.

   The foot adjuster will put back.

Note

Be sure to hold the projector when putting the foot adjuster back so as not to let the front fall on your fingers.

Picture projection

CAUTION
Do not look into the projection lens while operating the projector.

Preparation
- Install and connect the projector properly.
- Take off the lens cover.
- Set the POINTER/PJ to “PJ”.

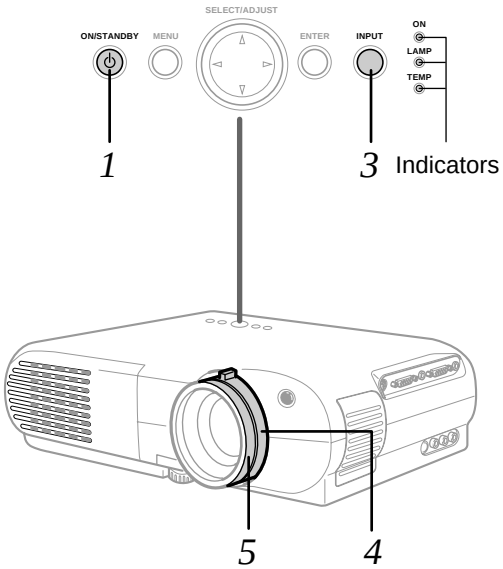

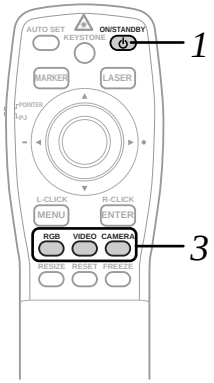

1 Press ON/STANDBY.

Both the ON and LAMP indicators light up in green.

ON	On (Green)	ON	On (Green)
LAMP	Flashing (Green)	LAMP	On (Green)

2 Turn on the connected equipment and put it in playback mode.

3 Select the input source.

(On the remote control)

Press RGB or VIDEO.

(On the control panel of the main unit)

Press INPUT repeatedly.

Each time the button is pressed, the source indication on the screen changes as follows:

RGB:	To project pictures from a computer connected to RGB INPUT.
↓	
Video:	To project pictures from a video player connected to VIDEO INPUT.
↓	
Camera:	To project pictures from a document imaging camera. (For document imaging camera model only)

4 Adjust the picture size by turning the zooming ring.

Turn to the right to enlarge the picture.

Turn to the left to reduce the picture.

5 Focus on the picture by turning the focusing ring.

A still picture is recommended for focusing.

(Continued)

(Continued)

Notes

- "⚠" is displayed on the screen if the projector does not receive any signal from the connected equipment. Put the equipment in playback mode.
- Due to the lamp characteristic, flickers may occasionally occur in a picture. This is not malfunction of the unit.
- When an RGB source is selected and no signal is sent from the computer for about 30 minutes, the projector turns to standby mode for power saving. It automatically turns on when the signal resumes. Pressing ON/STANDBY also turns it on.
- While operating the projector, " ✋ " may be displayed on the screen. This means that the operation cannot be completed.

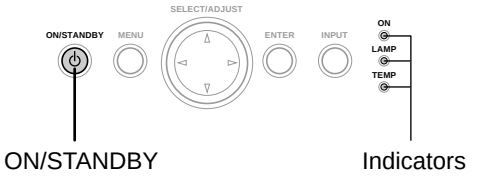

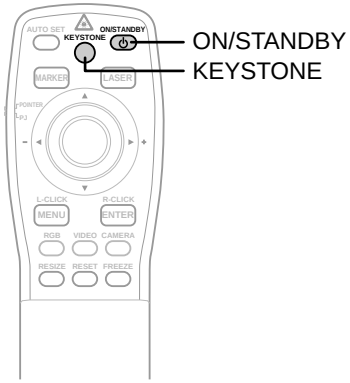

Turning the power off

1) Press ON/STANDBY after using the projector.

   An instruction message appears.

2) Press ON/STANDBY again.

   The LAMP indicator turns off, and the projector turns to standby mode. (The ON idicator lights in orange.)

3) After confirming the exhaust fan stops, unplug the power cord.

   The ON indicator turns off.

Notes

- Even after turning the power off, the intake and exhaust fans continue to work for a while to cool the inside of the projector.
- Immediately after the power off, the projector may not be turned on while the LAMP indicator is flashing in green.
- Before unplugging the power cord, make sure that the fans are stopped.

Correcting the keystone distortion

A picture may be expanded on the upper side if projected upward from the projector lifted up by the foot adjuster. The projector can correct this keystone distortion automatically.

Press KEYSTONE.

The keystone distortion is corrected automatically.

To correct further, make the "Keystone" adjustment on the menu. 30

(Continued)

(Continued)

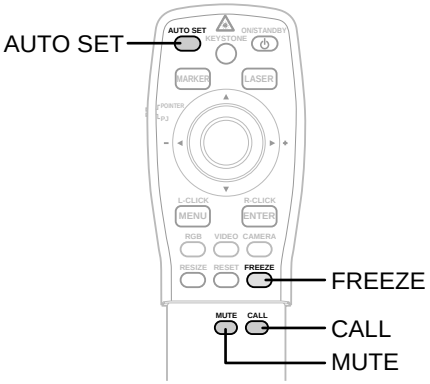

Adjusting the image automatically

An image which is flickering, blurred or is not centered, can be adjusted automatically.

Press AUTO SET.

The image is adjusted automatically.

To adjust further, make the “Image” adjustment on the menu. 31

Cutting off the picture and sound temporarily

1) Press MUTE.

The sound is cut off temporarily.

“ ” appears.

2) Press MUTE again.

The picture is also cut off temporarily.

“ ” appears.

To restore, press MUTE again.

Note

If you press MUTE while the menu is displayed, the menu disappears.

Freezing the picture

Press FREEZE.

The picture freezes.

“ ” mark appears on the screen.

To release the picture, press FREEZE again.

Any other operations can also release the picture.

Note

This function is convenient for the case where you are using the document imaging camera model and change documents to project through the camera.

Displaying the input source information

Press CALL.

The current input source and the signal status information is displayed.

To close the display, press CALL again.

Contents of displayed items

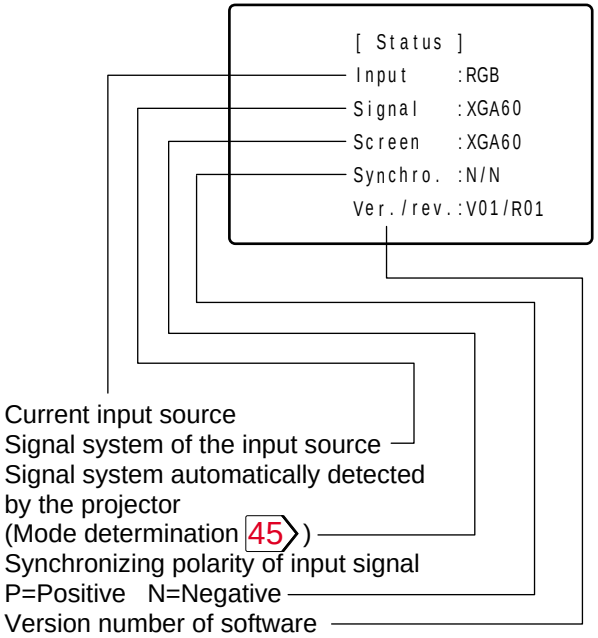

Note

If you press CALL while the menu is displayed, the menu disappears.

(Continued)

(Continued)

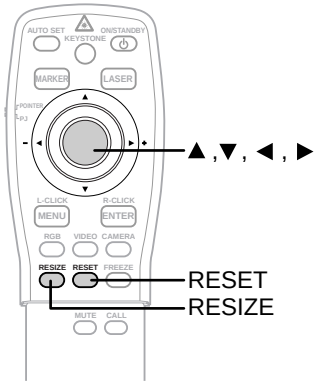

Changing the picture size

Pictures are projected at the maximal projection size regardless of the signal types. Optionally you can change the picture size to through size or enlarge it.

Press RESIZE.

Each time the button is pressed, the picture size changes from the center of the picture.

When the picture size does not correspond with the projection area, the picture can be moved by pressing ▲, ▼, ◀ and ▶.

When the picture size is smaller than the projection area:

▲ : To move the picture upward
▼ : To move the picture down
◀ : To move the picture leftward
▶ : To move the picture rightward

When the picture size is larger than the projection area:

▲ : To view the upper side of the picture
▼ : To view the lower side of the picture
◀ : To view the left side of the picture
▶ : To view the right side of the picture

Notes

- Picture size returns to normal after the power is turned off. The values are not saved.
- You may not change the picture size depending to the signal.
- Pictures of VGA signals, etc. may be slightly inferior in quality at the initial size because they are enlarged.
- The picture returns to the normal position when the RESET button is pressed after the picture is moved.
- The picture may not be projected properly while moving the picture.

Operating the computer by the remote control

If you connect the iREMOTE MOUSE RECEIVER to the computer, the supplied remote control can work as a mouse of the computer.

Connecting the REMOTE MOUSE RECEIVER

Check that the power of the computer is turned off.

Connect the REMOTE MOUSE RECEIVER.

Remove the mouse actually used and change it to the supplied cable.

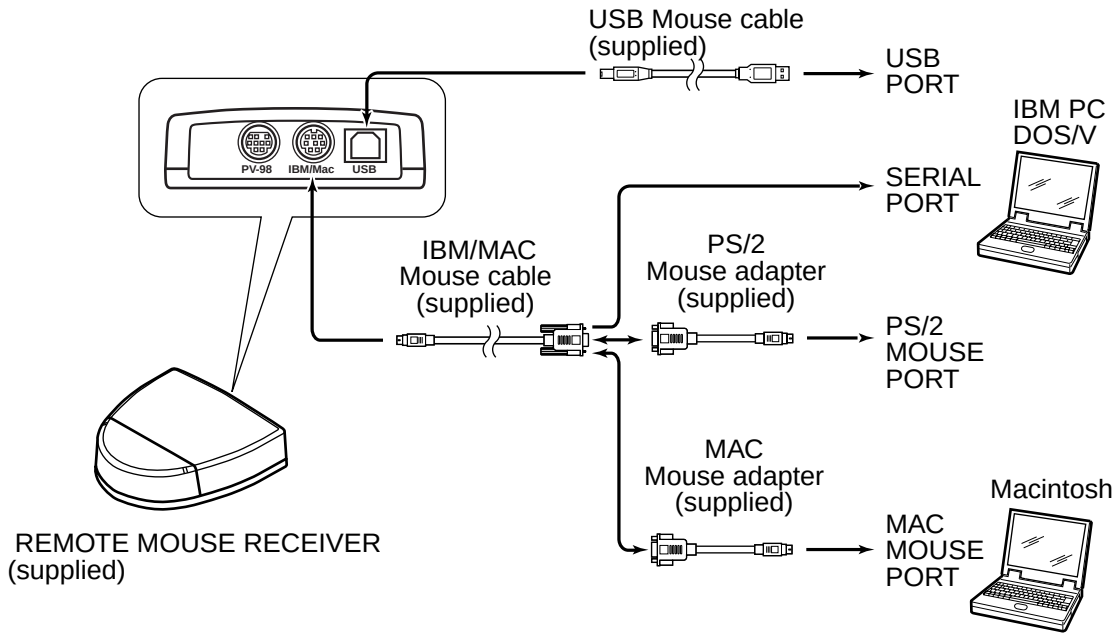

Notes

- To operate the projector and the computer by the remote control, place the REMOTE MOUSE RECEIVER close to the projector.
- When connecting the REMOTE MOUSE RECEIVER to an IBM PC/DOS V computer, use the supplied PS/2 mouse adapter if you are using a PS/2 mouse, or connect the supplied IBM/MAC cable directly to your computer if you are using a serial mouse.
- When connecting the REMOTE MOUSE RECEIVER to the USB PORT for the first time, insert the “Windows98 CD-ROM” and install the device drivers for a USB interchangeability device and a USB human interface devices (two kinds). The installation starts automatically when you connect a USB mouse cable connected to the remote mouse receiver to the USB port of your computer.

(Continued)

(Continued)

Operating the computer by the remote control

Use the supplied remote control pointing it at the connected REMOTE MOUSE RECEIVER.

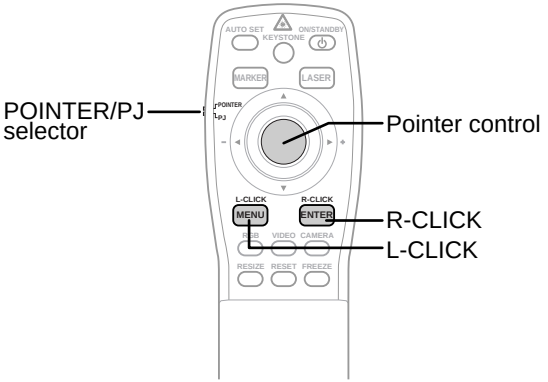

Preparation

Set the POINTER/PJ selector to “POINTER”.

To move the pointer

Press the pointer control.

The pointer moves to the pressed direction.

To left-click

Press L-CLICK.

To right-click

Press R-CLICK.

To drag and drop

While holding down the center of the pointer control, press the rim and release the center.

Notes

- The remote control operating range is about 5 meter from the front of the remote sensor.
- The remote control may not operate when there is sunlight or other strong light such as a fluorescent lamp shining on the remote sensor.

Settings and adjustments on the menu

Most of adjustments and settings are made on the menu.

To display the menu, press MENU.

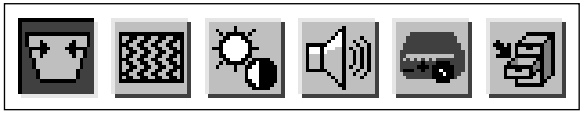

The followings are adjustments and settings on the menu. For details, see page in ☐.

When using this projector for the first time, see "Default". 28

Keystone 30

Auto set : To correct the keystone distortion automatically.

Adjust : To make the correction of keystone distortion beyond the automatic correction.

Image 31

Auto sync. : To adjust the image automatically.

Phase : To adjust the phase.

H-position : To shift the image position horizontally

V-position : To shift the image position vertically.

Clock : To adjust the clock frequency.

Picture 32

Contrast : To adjust the contrast.

Brightness : To adjust the brightness.

Color : To adjust the color depth.

Tint : To adjust the tint.

Sharpness : To adjust the sharpness.

R-level : To adjust the amount of red in the picture.

G-level : To adjust the amount of green in the picture.

B-level : To adjust the amount of blue in the picture.

Camera gain : To adjust the sensitivity of the document imaging camera. (For document imaging camera model only)

Audio 33

Volume : To adjust the sound volume of the speaker.

Bass : To adjust the bass of the sound output.

Treble : To adjust the treble of the sound output.

Default 28

Language : To select the language for displays.

Proj. mode : To set the projecting orientation according to the way of installation.

RGB input : To set the signal type of RGB input.

Video signal : To set the signal type of video input.

Scrn display : To use or disable on-screen displays.

Save 34

Save data : To save the adjustments and settings on the menu.

All preset : To restore the adjustments and setings on the menu to the factory set.

Initial settings – Default

Make the basic settings for projecting.

Preparation

- Display the image as explained in “Picture Projection”. 21
- Set the POINTER/PJ selector to “PJ”.

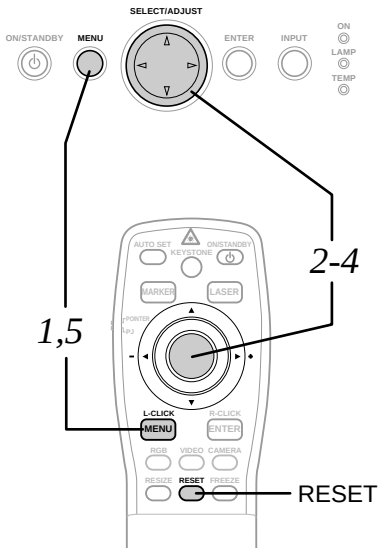

1 Press MENU to display the menu.

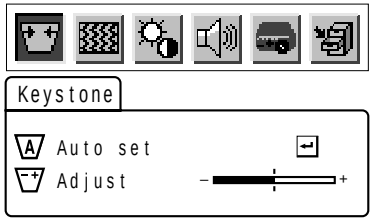

2 Press ◀ or ▶ to select .

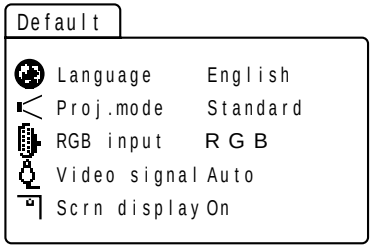

3 Press ▲ or ▼ to select a preferred item.

4 Press ◀ or ▶ to make the setting.

To select another item, go back to step 3.

Language

Select a language for the menu or on-screen displays.

English:	English
Français:	French
Deutsch:	German
Italiano :	Italian
Español :	Spanish
Português :	Portuguese
日本語 :	Japanese

Proj. mode

Confirm your installation type on the chart on page 18.

Standard:	Floor-mounted front projection
Rear:	Floor-mounted rear projection
Ceiling:	Ceiling-mounted front projection
R. ceil.:	Ceiling-mounted rear projection

RGB input

To set the signal type of RGB input.

RGB:	RGB signal
Y/Pb/Pr:	Color difference (Component) video signal from the DVD video player, etc.

Video signal

To set the signal type of video input.

Auto:	Automatic signal detection works on video input. If it does not properly, set the signal type of the source from the followings.
NTSC M:	NTSC M signal
NTSC443A:	NTSC4.43A signal
NTSC J:	NTSC J signal
NTSC N:	NTSC N signal
NTSC443B:	NTSC4.43B signal
PAL:	PAL signal
PAL N:	PAL N signal
SECAM:	SECAM signal
PAL443:	PAL4.43 signal
PAL M:	PAL M signal

(Continued)

(Continued)

Scrn display

On:	On-screen displays (indications of input selection, signal absent or mute mode, etc.) appear.
Off:	On-screen displays do not appear.

5 Press MENU.

The menu disappears.

Notes

- These settings are stored until you turn the power off.
- To store the settings even if the power is turned off, follow the procedure of “Saving data”. 34
- Pressing RESET will return the adjustment or setting currently selected to default.

Keystone correction – Keystone

Preparation

- Display the image as explained in “Picture Projection”. 21
- Set the POINTER/PJ selector to “PJ”.

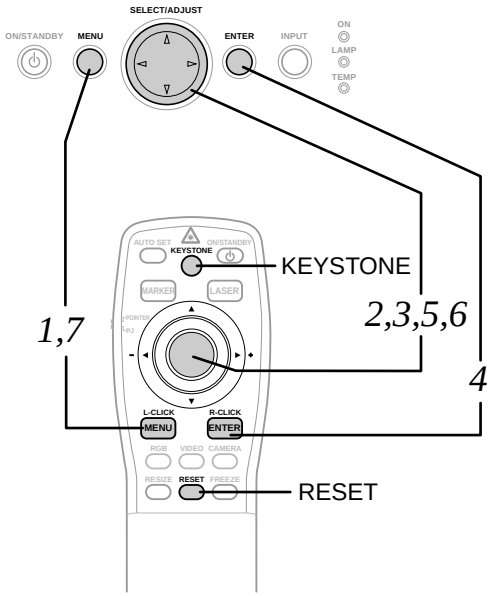

1 Press MENU to display the menu.

2 Press ◀ or ▶ to select .

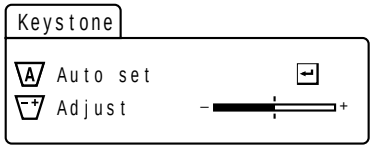

3 Press ▼ to select “Auto set”.

4 Press ENTER.

The keystone distortion is corrected automatically. For further correction, follow the below steps.

5 Press ▼.

6 Press ◀ or ▶ to correct the distortion.

◀ (–): To reduce the upper width.
▶ (+): To reduce the lower width.

7 Press MENU.

The menu disappears.

Notes

- Pressing KEYSTONE on the remote control can also correct the keystone distortion automatically. 22
- These adjustments are stored until you turn the power off.
- Pressing RESET will return the adjustment or setting currently selected to default.
- Pictures may be slightly deteriorated by the keystone correction.

0 degrees setting for the automatic keystone correction

Depending on the operating condition such as vibration, the distortion may be beyond the automatic keystone correction. The horizontal condition setting (0 degrees setting) may be disordered. In such a case, perform the following 0 degrees setting to correct the distortion.

1) Place the projector on a level surface.
2) On the menu, select “Auto set” in “Keystone”.
3) Press RESET.

Notes

- Do not make the 0 degrees setting on an inclined or unstable surface or in a shaky place as it may not be performed properly.
- To store this setting even if the power is turned off, follow the procedure of “Saving data”. 34

Projection adjustments – Image

Preparation

- Display the image as explained in “Picture Projection”. 21
- Set the POINTER/PJ selector to “PJ”.

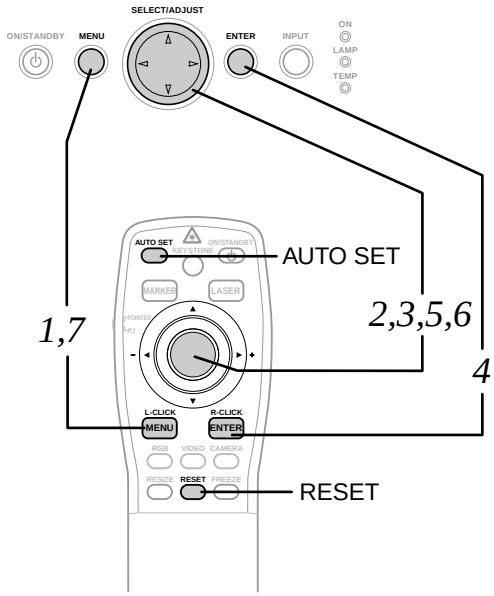

1 Press MENU to display the menu.

2 Press ◀ or ▶ to select .

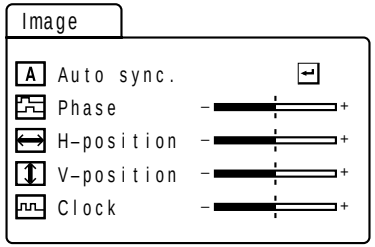

3 Press ▼ to select “Auto sync.”

4 Press ENTER.

The image is automatically adjusted.
For further adjustments, follow the below steps.

5 Press ▲ or ▼ to select a preferred item.

6 Press ◀ or ▶ to adjust the item.

To select another item, go back to step 5.

Phase:	To reduce flickers.
H-position:	To shift the image to the left (–), to the right (+).
V-position:	To shift the image down (–), to up (+).
Clock	To remove vertical stripes.

7 Press MENU.

The menu disappears.

Notes

- When performing the automatic projection adjustment, use a bright and distinctly edged picture.
- Pressing AUTO SET on the remote control can also adjust the image automatically. 23
- If you project an image from a computer with an LCD screen while monitoring the image on the computer, the image may not be projected properly, depending on the computer model. In this case, turn off the computer display, or make the necessary picture adjustments on the projector. For details on controlling the computer display, etc., refer to the computer’s manual and description on the software for the computer used.
- During adjustments of “H-position” or “V-position”, the image may not be projected properly.
- While using, an aberration of the phase may occur. In that case, adjust “Phase” again.
- Some item may be displayed in gray depending on an input source. The item displayed in gray cannot be adjusted and/or set.
- These adjustments are stored until you turn the power off.
- To store the adjustments even if the power is turned off, follow the procedure of “Saving data”. 34
- Pressing RESET will return the adjustment or setting currently selected to default.

Picture adjustments – Picture

Preparation

- Display the image as explained in “Picture Projection”. 21
- Set the POINTER/PJ selector to “PJ”.

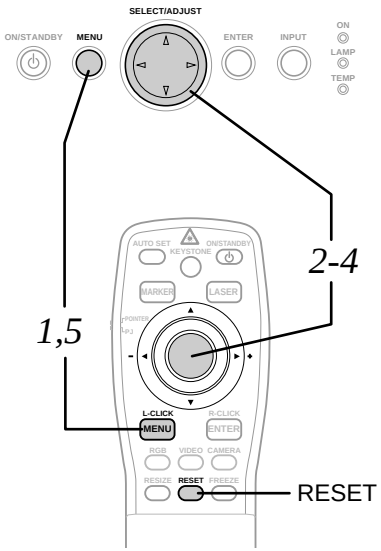

1 Press MENU to display the menu.

2 Press ◀ or ▶ to select .

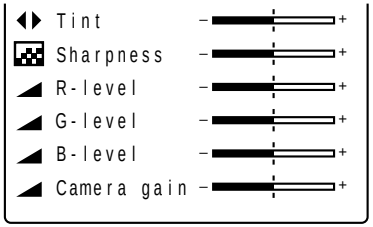

3 Press ▲ or ▼ to select a preferred item.

4 Press ◀ or ▶ to adjust the item.

To select another item, go back to step 3.

	– : ◀	+ : ▶
Contrast :	(–) Lower	(+) Higher
Brightness:	(–) Darker	(+) Brighter
Color:	(–) Duller	(+) Brighter
Tint:	(–) Redder	(+) Greener
Sharpness:	(–) Softer	(+) Sharper
R-level:	(–) To reduce red	(+) To increase red
G-level:	(–) To reduce green	(+) To increase green
B-level:	(–) To reduce blue	(+) To increase blue

Camera gain: (For document imaging camera model only)

(–) To lower the camera sensitivity when the subject is too bright.
(+) To raise the camera sensitivity when the subject is too dark.

5 Press MENU.

The menu disappears.

Notes

- The adjustment can be stored on each input source (RGB, Video, Camera).
- Some item may be displayed in gray depending on an input source. The item displayed in gray cannot be adjusted and/or set.
- These adjustments are stored until you turn the power off.
- To store the adjustments even if the power is turned off, follow the procedure of “Saving data”. 34
- Pressing RESET will return the adjustment or setting currently selected to default.

Sound adjustments – Audio

Preparation

- Display the image as explained in “Picture Projection”. 21
- Set the POINTER/PJ selector to “PJ”.

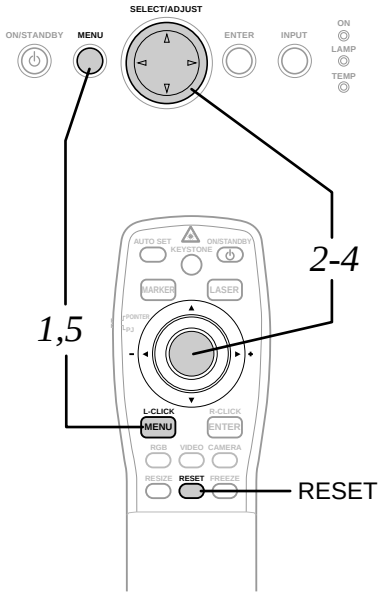

1 Press MENU to display the menu.

2 Press ◀ or ▶ to select .

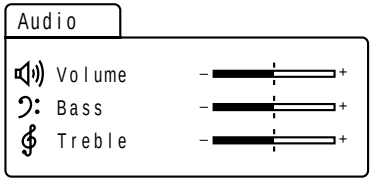

3 Press ▲ or ▼ to select a preferred item.

4 Press ◀ or ▶ to adjust the item.

To select another item, go back to step 3.

– : ◀ + : ▶

Volume :	(–) To turn down. (+) To turn up.
Bass:	(–) To reduce the bass. (+) To increase the bass.
Treble:	(–) To reduce the treble. (+) To increase the treble.

5 Press MENU.

The menu disappears.

Notes

- These adjustments are stored until you turn the power off.
- To store the adjustments even if the power is turned off, follow the procedure of “Saving data”. 34
- Pressing RESET will return the adjustment or setting currently selected to default.

Saving data – Save

Preparation

- Display the image as explained in “Picture Projection”. 21
- Set the POINTER/PJ selector to “PJ”.

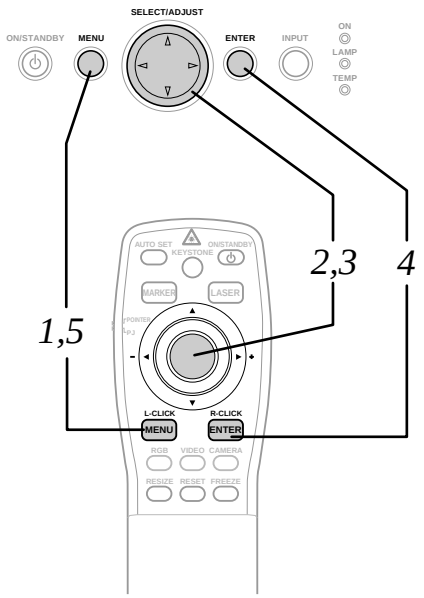

1 Press MENU to display the menu.

2 Press ◀ or ▶ to select .

3 Press ▲ or ▼ to select a preferred item.

Save data : To save the adjustments and settings on the menu.

All preset : To restore the adjustments and settings on the menu to the factory set.

4 Press ENTER.

5 Press MENU.

The menu disappears.

Part names and functions of document imaging camera

CAUTION
- When using the camera, be careful to not pinch your hand or fingers into the arm.
- Do not look into the projection lens while operating the projector.

On the document imaging camera model, you can project pictures using the document imaging camera.
The document imaging camera can directly project any materials (documents, illustrations, etc.) without using an OHP film.

Camera control panel

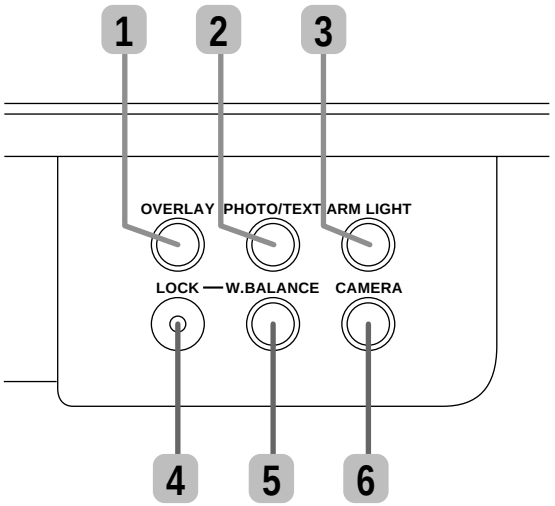

1 OVERLAY button 39
To activate the overlaying projection.

2 PHOTO/TEXT button 38
To switch modes between text and photo.

3 ARM LIGHT button 37
To turn on or off the light.

4 LOCK (W.BALANCE) indicator 38
Lights when the white balance is locked.

5 W.BALANCE button 38
To switch white balance settings between automatic adjustment and lock.

6 CAMERA button 37
To select the camera source.
Press again to return to the previous input source.

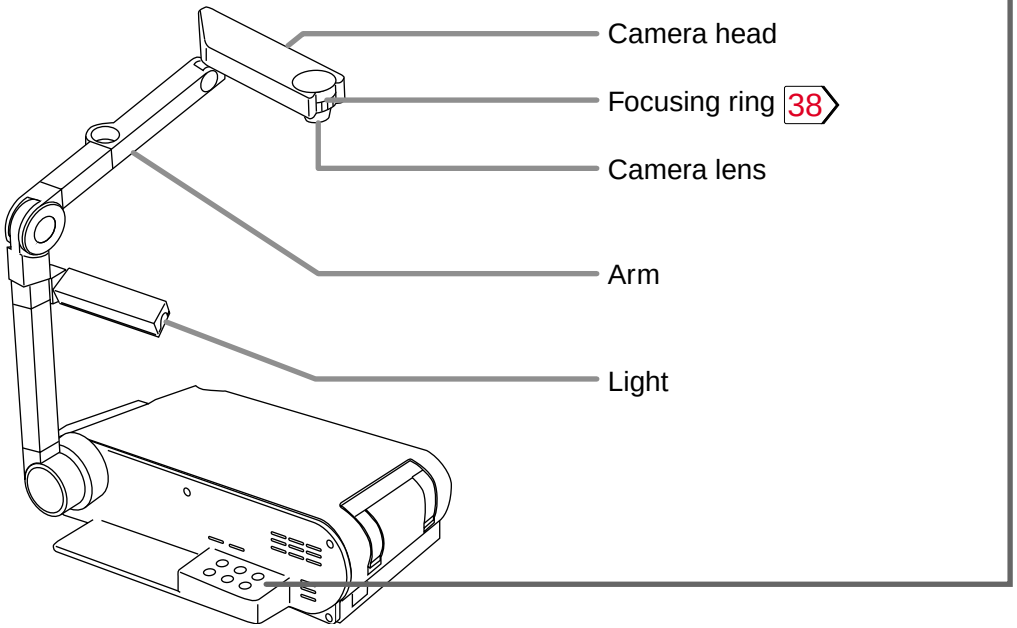

(Continued)

Camera

(Continued)

Preparation of the document imaging camera

1) Raise up the arm.

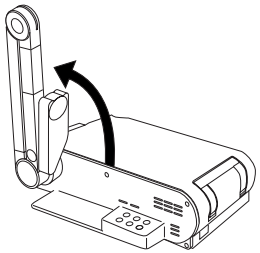

2) Stretch the arm.

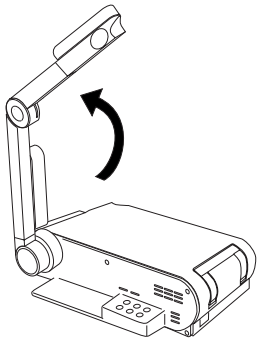

3) Turn the arm.

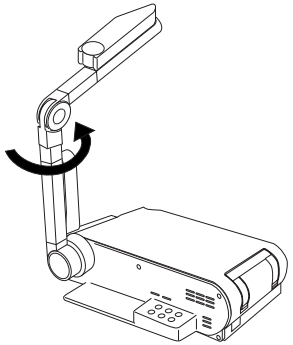

4) Open the camera head.

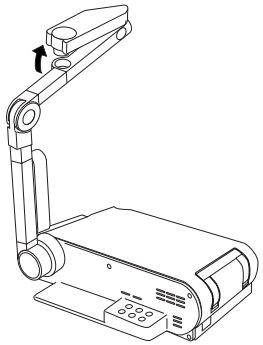

5) Turn the camera head.

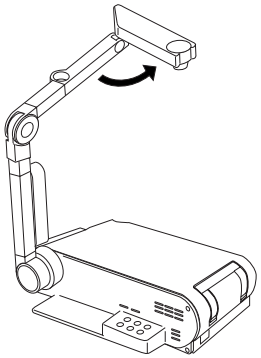

6) Pull up the light.

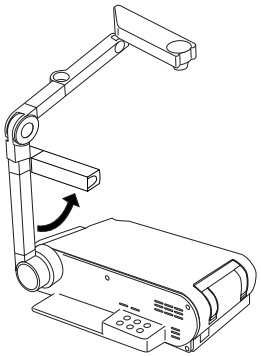

7) Turn the light.

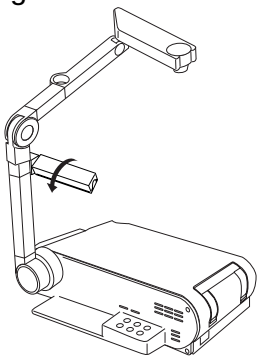

Notes

- Never give shocks or impacts to the camera or arm as this may cause breakdowns.
- While raising up the arm in step 2), be careful not to hit your face or your body.

Picture projection with the document imaging camera

Preparation

Display the image as explained in “Picture Projection” . 21

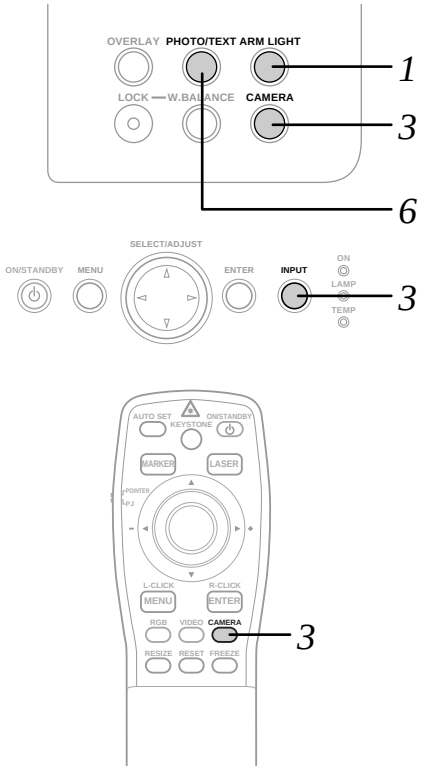

1 Press ARM LIGHT.

The light turns on.

2 Place a document (text, illustration) onto or around the projector, and turn the camera head to direction of the document.

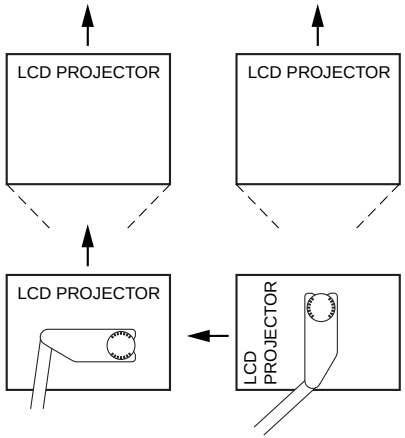

You can project around the projector by moving the arm and the camera head.

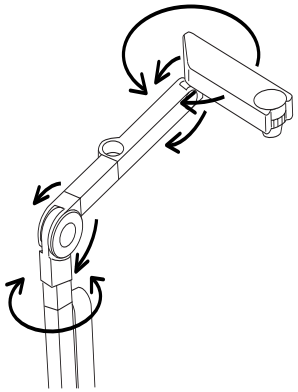

3 Press CAMERA to select the camera input mode.

Pressing CAMERA on the camera control panel or INPUT on the main unit can also select it.

“Camera” is displayed.

4 Move the camera head to adjust the size of the picture.

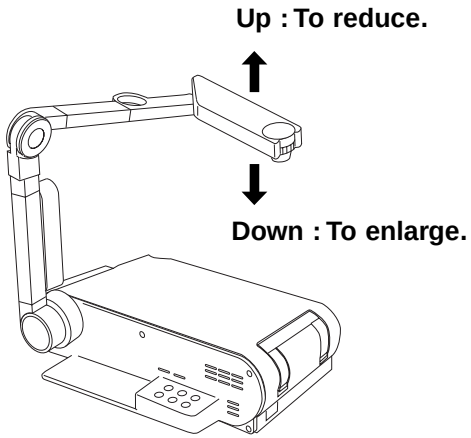

(Continued)

(Continued)

5 Focus on the picture by turning the focusing ring on the camera head.

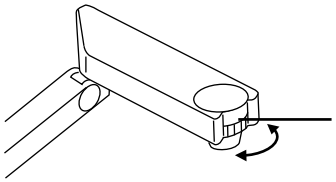

Focusing ring
N: Near
F: Far

6 Press PHOTO/TEXT to select the mode of the document.

PHOTO: when using a photograph.

TEXT: AB when using a text.

7 When finished, turn off the light and close it, and put back the arm.

Follow the steps of “Preparation of the document imaging camera” in reverse.

Notes

- The light turns off automatically when the arm is leaned.
- When the arm is not raised up, the camera source cannot be projected.
- In the camera input selected, audio signals from the RGB INPUT (AUDIO) is selected.
- “Camera gain” adjustment may improve view of a camera subject which is too dark or vivid. 32

Locking the white balance

Normally, this camera automatically adjusts the color balance to project the picture. If the adjustment is not sufficient, follow the steps below to lock the white balance.

1) Project a white paper and enlarge it to fill the screen.
2) Press W.BALANCE to turn the LOCK indicator on.

   The white balance is locked.

   To release the white balance, press W.BALANCE again to turn the LOCK indicator off.

Notes

- If you raise up the arm while the camera input is selected, the color of the picture may vary for an instant due to the white balance adjustment. This is not malfunction.
- If you put back the arm and raise it up while the white balance is locked (the LOCK indicator is lit), the projector releases the white balance but leaves the LOCK indicator on. In this case, press W.BALANCE to restore the indicator to the normal status.

Correcting illuminated defects

If there are some luminous dots on a projected picture, make the following correction.

1) While the camera is active, cover the camera lens with a black paper completely.
2) Press OVERLAY and ARM LIGHT at the same time.

When flickering occurs by a fluorescent lighting in the room

In this case, turn off the lighting of the room or adjust the Camera gain in the following manner.

1) Press ARM LIGHT to turn off the arm lighting.
2) Press MENU to display the menu.
3) Press ◀ or ▶ to select “Picture”.
4) Press ▲ or ▼ to select “Camera gain”.
5) Press ◀ or ▶ to adjust the value.

Overlaying projection

With the RGB input or the video input selected, you can draw on the screen with the pen.

Preparation

- Select either of the RGB input or the video input.
- Set the document imaging camera at the ready. 36

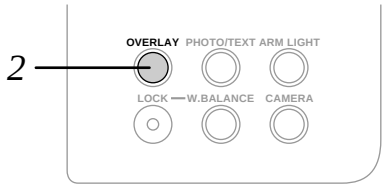

1 Prepare a white paper to write on.

2 Press OVERLAY.

The camera source is overlaid on the picture.

3 Project the paper using the camera.

4 Write on the paper with a blue or red pen.

The handwriting is superimposed on the picture.

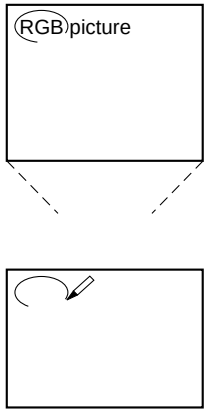

Notes

- Handwriting in colors except blue and red cannot be displayed properly.
- Handwriting in fine lines may not be displayed properly.
- When Y/Pb/Pr signal enters, the overlaying projection function is not available.

Trouble indications

If there is some problem inside the projector, the indicators light up or flash.

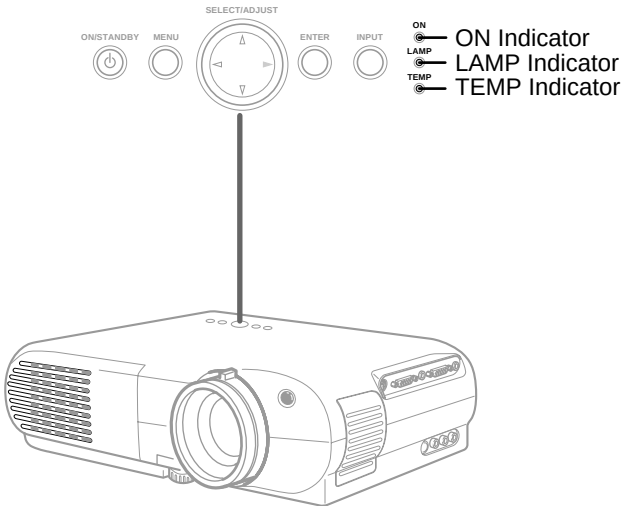

ON	Off or lit (red)
LAMP	–
TEMP	–

The power does not come on.

→ Malfunction of the unit.

- Unplug the power cord and call the dealer.

ON	Lit (red)
LAMP	Lit (red)
TEMP	–

The lamp turns off or does not light up.

→ The lamp's end, or malfunction of the unit.

- Lamp's life length is over, replace the lamp with new one. 42
- Unplug the power cord and call the dealer.

ON	Lit (red)
LAMP	–
TEMP	Lit (red)

The power turns off or does not come on.

→ The inside is too hot, or the projector has been working in an area of high temperature.

- Place the projector correctly so the intake and exhaust fans' holes are not covered.
- Turn the projector off, and leave it for a while, and turn it on again.
- Clean the air filter. 41

ON	Lit (red)
LAMP	–
TEMP	Flashing (red)

The power turns off or does not come on.

→ Trouble with the intake fan.

- Unplug the power cord and call the dealer.

ON	Lit (red)
LAMP	–
TEMP	Flashing (orange)

The power turns off or does not come on.

→ Trouble with the exhaust fan.

- Unplug the power cord and call the dealer.

Note

Before attempting any maintenance, unplug the power cord.

Air filter, lens and main unit cleaning

CAUTION
If you use the projector mounted on the ceiling, ask the dealer to carry out the maintenance such as cleaning.

Cleaning the air filter

The filter under the air filter cover is the device to shut out dusts or dregs.

Do not use the projector with the filter taken off.

Give a frequent clean especially to the air filter. (The cleaning period is once per about 50 hours).

1) Unplug the power cord.

2) Take off the air filter cover.

   The filter is on the right side of the projector.

   Pull up the filter tabs.

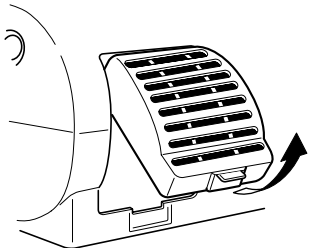

3) Clean the air filter cover.

   Remove dust and stains with a vacuum cleaner.

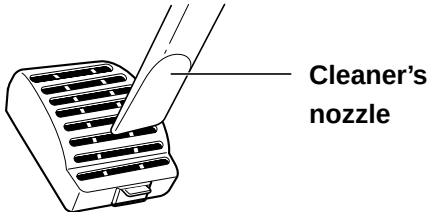

4) Attach the air filter cover.

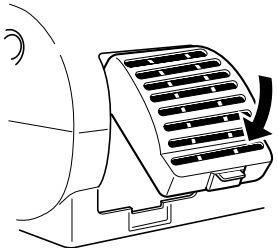

Notes

- When the air filter is dusty, the ventilation is impaired. This causes the temperature inside the projector to rise, and may damage the unit.
- Attach the air filter cover firmly after the cleaning. If it is not set correctly, the dusts will enter and they will be projected and overlapped on the picture.

Cleaning the lens

Use a blower or a lens cleaner to clean the lens.

Never rub or tap the lens with a hard object as the lens surface is fragile.

Cleaning the main unit

- Pull out the power cord before cleaning.
- Use a soft cloth to wipe off stains from the surface.
- To remove difficult stains, use a soft cloth slightly moistened with a weak solution of synthetic detergent and water, and finish with a soft, dry cloth.

Replacing the intake, exhaust fans and air filter

To maintain the efficiency of the projector, replace the intake and exhaust fans about every two to three years.

Ask the dealer for the replacement.

Lamp replacement

The lamp will eventually begin to project dark or dull pictures and finally will not light up. (Lamp's life length depends on the use condition.) In such a case, replace the lamp with new one.

CAUTION

- If you use the projector mounted on the ceiling, ask the dealer to carry out the maintenance such as cleaning or replacement of the lamp.
- When replacing, always use lamp "TLPL6" (for TLP450U, TLP451U, TLP650U, TLP651U, TLP470U, TLP471U, TLP670U, TLP671U) or "TLPL8" (for TLP650A, TLP651A) (sold separately). For detail, refer to the lamp instruction.
- If you have been using the projector, the lamp will be very hot, and may cause burn injuries. Wait for the lamp to cool (for longer than 1 hour) before replacing it.
- If the lamp should break, please handle with care to avoid injury due to broken pieces and contact your dealer for repair service.

1 Unplug the power cord.

2 Wait until the lamp gets cold enough.

3 Take off the lamp cover on the bottom panel.

Loosen two screws, and pull off the lamp cover.

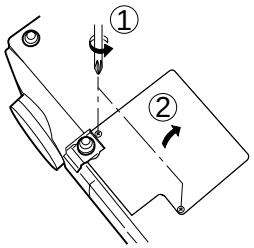

4 Pull out the lamp.

Loosen the two fixing screws, and lift up the handle to pull out the lamp.

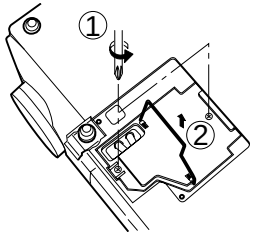

5 Load a new lamp.

Slide until it hits the bottom and tighten the two fixed screws.

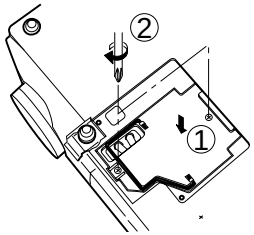

6 Attach the lamp cover.

Slide the cover in place and tighten two screws.

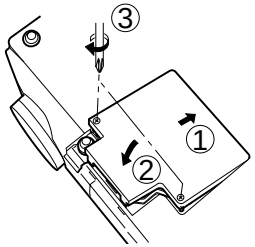

7 Reset the lamp timer.

Refer to the lamp instructions for resetting.

Notes

- The projector displays the total working time at every 1,000 hours (only when plugged in and turned on; ex. " >1000H ", " >2000H ").
- The lamp should be replaced if the total working time exceeds about 2,000 hours.
- Attach the lamp cover firmly after replacing the lamp. If it is not set correctly, the power will not turn on.
- Use a new lamp when replacing it.
- The lamp is made of glass and is very fragile. Do not touch the lamp with your bare hands and do not jolt or damage it. Do not use an exhausted lamp.

Before calling service personnel

Check the following points before asking for support service.

Refer also to “Trouble indications”. 40

The power does not come on.

- The power cord is disconnected.
  → Firmly plug in the power cord. 19
- The lamp cover is not attached correctly.
  → Attach the cover correctly. 42

The power turns off while using the projector.

- The ambient temperature of the projection room is too high.
  → Lower the ambient temperature of the projection room, and turn the power on.

No image appears.

- The lens cover is on.
  → Take off the lens cover. 19
- The wrong input is selected.
  → Select the input source correctly. 21
- The muting mode is on.
  → Press MUTE to restore the picture. 23
- The “Brightness” adjustment is at its darkest.
  → Make the “Brightness” adjustment. 32
- The source is not correctly connected to the projector.
  → Connect the source correctly to the projector. 16

No sounds are heard.

- The wrong input is selected.
  → Select the input source correctly. 21
- The audio muting mode is on.
  → Press MUTE to restore the sound. 23
- The sound volume is at the minimum.
  → Adjust the sound volume on the menu. 33
- The source is not correctly connected to the projector.
  → Connect the source correctly to the projector. 16

The images are blurred. Focusing is uneven.

- The lens is dirty.
  → Clean the lens.
  Use a lens cleaner to clean the lens. 41
- The picture is out of focus.
  → Focus the picture. 21
- The projection distance is not appropriate.
  → Adjust the distance properly. 19
- The projecting light is not hitting the screen squarely.
  → Adjust the projecting direction so that the light hits the screen squarely. 19
- The “Brightness”, “Contrast”, “Sharpness” or “Phase” adjustments are not correct.
  → Make the “Image” or “Picture” adjustments. 31 32

The pictures are dim.

- The “Brightness” or “Contrast” adjustments are not correct.
  → Make the “Picture” adjustments. 32
- The lamp life is ending.
  → Replace the lamp. 42

The colors are faint. The colors are strange.

- The “Color”, “Tint”, “R-Level”, “G-Level” or “B-Level” adjustments are not correct.
  → Make the “Picture” adjustments. 32
- The lamp life is ending.
  → Replace the lamp. 42

(Continued)

Image does not appear when using the document imaging camera.

- The wrong input is selected.
  → Select the correct input source. 37

Image is out of focus or not clear when using the document imaging camera.

- The camera lens is dirty.
  → Clean the camera lens.
  Use a lens cleaner to clean the lens. 41
- The document imaging camera is out of focus.
  → Focus the document imaging camera. 38
- Focus between main unit and screen is not correct.
  → Focus the picture by turning the focusing ring. 21
- The light is not on.
  The image may not be projected clearly if the light is not on.
  → Turn on the light. 37

The remote control does not work.

- The remote control is not facing the remote sensor.
  → Face the remote control transmitter toward the remote sensor on the projector. 15
- The remote control is too far.
  → Operate within about 5 meters. 15
- There is an obstruction between the remote control and the remote sensor.
  → Remove the obstacle.
- The batteries are exhausted.
  → Replace the batteries. 14
- The operating mode of the remote control is not set correctly.
  → Set the POINTER/PJ selector according to the equipment you want to control. 13

Input Signal

Mode determination and signal system

◎ : full compatible ○ : dot resizing display
□ : simplified display ● : high resolution serial transfer control

Signal		Frequency		Resolution (line)		Synchronizing	Default		Remarks
Mode	System	Horizontal (kHz)	Vertical (Hz)	Horizontal	Vertical	H/V	650/651 670/671 model	450/451 470/471 model	
NTSC	NTSC	15.734	59.940	664	484	N/N	●	●	VIDEO IN
PAL/SECAM	PAL/SECAM	15.625	50.000	756	574	N/N	●	●	VIDEO IN
NTSC/DTV480i	Digital broadcasting	15.750	60.000	720/640	480	N/N	●	●	RGB IN
DTV480P/VGA60Hz	Digital broadcasting	31.500	60.000	720/640	480	N/N	◎	○	RGB IN
DTV720P	Digital broadcasting	47.500	60.000	1280	720	N/N	○	○	RGB IN
HDTV/DTV1080i	Hi-Vision/Digital broadcasting	33.750	60.000	1920	1080	N/N	○	○	RGB IN
NEC24K	PC98 Standard	24.830	56.420	640	400	N/N	◎	◎	RGB IN
TEXT70	VGA-350	31.470	70.090	640	350	P/N	◎	◎	RGB IN
TEXT70	VGA-400	31.470	70.090	640	400	N/P	◎	◎	RGB IN
TEXT85	VGA 85Hz-1	37.861	85.080	640	350	P/N	◎	◎	RGB IN
TEXT85	VGA 85Hz-2	37.861	85.080	640	400	N/P	◎	◎	RGB IN
VGA60	VGA 60Hz	31.470	59.940	640	480	N/N	◎	◎	RGB IN
VGA72	VGA 72Hz	37.861	72.809	640	480	N/N	◎	◎	RGB IN
VGA75	VGA 75Hz	37.500	75.000	640	480	N/N	◎	◎	RGB IN
VGA85	VGA 85Hz-4	43.269	85.008	640	480	N/N	◎	◎	RGB IN
MAC13	MAC-13”	35.000	66.667	640	480	– / –	◎	◎	RGB IN
SVGA56	SVGA 56Hz	35.156	56.250	800	600	P/P	◎	◎	RGB IN
SVGA60	SVGA 60Hz	37.879	60.317	800	600	P/P	◎	◎	RGB IN
SVGA72	SVGA 72Hz	48.077	72.188	800	600	P/P	◎	◎	RGB IN
SVGA75	SVGA 75Hz	46.875	75.000	800	600	P/P	◎	◎	RGB IN
SVGA85	SVGA 85Hz	53.674	85.061	800	600	P/P	◎	◎	RGB IN
MAC16	MAC-16”	49.724	74.550	832	624	– / –	◎	◎	RGB IN
XGA43i	XGA 43Hz interlace	35.522	43.479x2	1024	768	P/P	◎	○	RGB IN

(Continued)

Others

(Continued)

◎ : full compatible ○ : dot resizing display
□ : simplified display ● : high resolution serial transfer control

Signal		Frequency		Resolution (line)		Synchronizing	Default		Remarks
Mode	System	Horizontal (kHz)	Vertical (Hz)	Horizontal	Vertical	H/V	650/651 670/671 model	450/451 470/471 model	
XGA60	XGA 60Hz	48.363	60.004	1024	768	N/N	◎	○	RGB IN
XGA70	XGA 70Hz	56.476	70.069	1024	768	N/N	◎	○	RGB IN
XGA75	XGA 75Hz	60.023	75.029	1024	768	P/P	◎	○	RGB IN
XGA85	XGA 85Hz	68.677	84.997	1024	768	N/N	◎	○	RGB IN
MAC19	MAC-19”	60.197	74.872	1024	768	N/N	◎	○	RGB IN
SXGA75-1	SXGA 75Hz	67.500	75.000	1152	864	P/P	○	○	RGB IN
MAC21	MAC-21”	68.681	75.062	1152	870	– / –	○	○	RGB IN
SXGA60-1	SXGA 60Hz	60.000	60.000	1280	960	P/P	○	○	RGB IN
SXGA85-1	SXGA 85Hz	85.938	85.002	1280	960	P/P	□	□	RGB IN
SXGA43i	SXGA 43Hz interlace	46.433	43.436x2	1280	1024	P/P	○	○	RGB IN
SXGA60-2	SXGA 60Hz	63.981	60.020	1280	1024	P/P	○	○	RGB IN
SXGA75-2	SXGA 75Hz	79.976	75.025	1280	1024	P/P	○	○	RGB IN
SXGA85-2	SXGA 85Hz	91.146	85.024	1280	1024	P/P	□	□	RGB IN
UXGA60	UXGA 60Hz	75.000	60.000	1600	1200	P/P	□	□	RGB IN
UXGA65	UXGA 65Hz	81.130	65.000	1600	1200	P/P	□	□	RGB IN
UXGA70	UXGA 70Hz	87.500	70.000	1600	1200	P/P	□	□	RGB IN
UXGA75	UXGA 75Hz	93.750	75.000	1600	1200	P/P	□	□	RGB IN

Notes

- If the mode identification does not define the mode described on the chart above, adjust to the projection details.
- If the mode identification is carried out correctly, a normal display may be not obtained depending on the signal frequency.
- SXGA, UXGA signals can be projected since the projector has simplified compatibility with them. (However, letters and lines can be inequal or a part can be missing. Some signals may not be projected at all.)
- Some computers may have output modes which are not compatible with this projector. Check the compatibility of the connectors, signal levels, timing, and resolutions.

(Continued)

(Continued)

Signal assignment

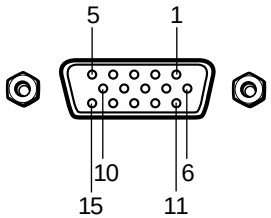

D-SUB 15 pin shrinking terminal

Input Signal

Video signal

Analog 0.7V(p-p) 75Ω

Horizontal synchronizing signal

TTL level (positive/negative polarity)

Vertical synchronizing signal

TTL level (positive/negative polarity)

Composite synchronizing signal

TTL level

Pin arrangements

Pin No.	
1	Video input (Red)
2	Video input (Green)
3	Video input (Blue)
4	N.C
5	GND
6	GND (Red)
7	GND (Green)
8	GND (Blue)
9	N.C
10	GND
11	GND
12	N.C
13	Horizontal synchronizing/ composite synchronizing signal
14	Vertical synchronizing signal
15	N.C

(Continued)

(Continued)

RGB signal defaults

The following signals are factory set as defaults in each mode. However, some computers may have different timings than those in the chart. Make the necessary adjustments if the picture has flickers or is blurred.

Video Timing (Horizontal)

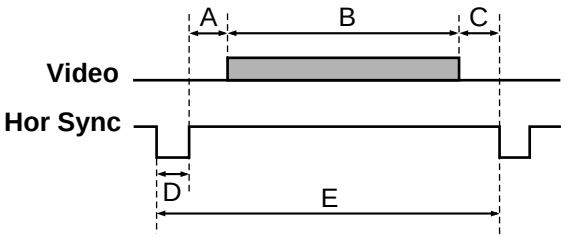

Video Timing (Vertical)

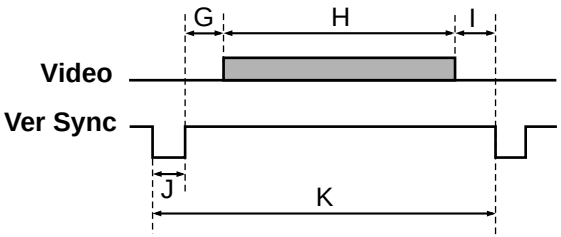

Timing chart

Mode	Resolution	A (Pixels)	B (Pixels)	C (Pixels)	D (Pixels)	E (Pixels)	fh (kHz)	fv (Hz)	Clock (MHz)	G (Lines)	H (Lines)	I (Lines)	J (Lines)	K (Lines)
NEC24k	640 x 400	85	640	59	64	848	24.83	56.42	21.053	25	400	7	8	440
TEXT70	640 x 350	50	640	14	96	800	31.47	70.09	25.175	59	350	38	2	449
TEXT70	640 x 400	50	640	14	96	800	31.47	70.09	25.175	34	400	13	2	449
TEXT85	640 x 350	96	640	32	64	832	37.86	85.08	31.500	60	350	32	3	445
TEXT85	640 x 400	96	640	32	64	832	37.86	85.08	31.500	41	400	1	3	445
VGA60	640 x 480	48	640	16	96	800	31.47	59.94	25.175	33	480	10	2	525
VGA72	640 x 480	128	640	24	40	832	37.86	72.81	31.500	28	480	9	3	520
VGA75	640 x 480	120	640	16	64	840	37.50	75.00	31.500	16	480	1	3	500
VGA85	640 x 480	80	640	56	56	832	43.27	85.01	36.000	25	480	1	3	509
MAC13	640 x 480	96	640	64	64	864	35.00	66.67	30.240	39	480	3	3	525
SVGA56	800 x 600	128	800	24	72	1024	35.16	56.25	36.000	22	600	1	2	625
SVGA60	800 x 600	88	800	40	128	1056	37.88	60.32	40.000	23	600	1	4	628
SVGA72	800 x 600	64	800	56	120	1040	48.08	72.19	50.000	23	600	37	6	666
SVGA75	800 x 600	160	800	16	80	1056	46.88	75.00	49.500	21	600	1	3	625
SVGA85	800 x 600	152	800	32	64	1048	53.67	85.06	56.250	27	600	1	3	631
MAC16	823 x 624	216	832	40	64	1152	49.72	74.55	57.283	39	632	1	3	667
XGA60	1024 x 768	160	1024	24	136	1344	48.363	60.004	65.000	29	768	3	6	806
XGA70	1024 x 768	144	1024	24	136	1328	56.476	70.069	75.000	29	768	3	6	806
XGA75	1024 x 768	176	1024	16	96	1312	60.023	75.029	78.750	28	768	1	3	800
XGA85	1024 x 768	208	1024	48	96	1376	68.677	84.997	94.500	36	768	1	3	808
MAC19	1024 x 768	180	1024	20	96	1320	60.197	74.872	73.200	30	768	3	3	804

Adjustments with RS-232C

Conditioning of the Projection Unit can also be done by a computer via the RS-232C, as well as by the remote control.

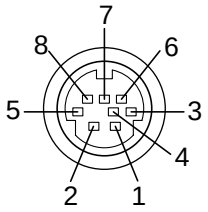

Mini DIN 8-pin (Main Unit)

Pin No.	Signal	Meaning
1	RXD	Receiving data
2	CTS	Consent to send
3	DSR	Data set ready
4	GND	Signal ground
5	RTS	Request to send
6	N.C	No connection
7	TXD	Sending data
8	N.C	No connection

Interface format

1	Communication method	RS-232C 9600 bps, No parity, Data length: 8 bit, Stop bit: 1 bit
2	Communication format	STX (02h) | Command (3Byte) | ETX (03h) One command only can be used in one communication.
3	Data format	Command shall be composed of alphanumeric characters of ASCII description. Use only capital letters.
4	Return value	Acknowledge ACK (06h) Not Acknowledge NAK (15h)

Note

When commands are transmitted serially, keep more than 100 ms intervals between the commands.

Command list

Classification	Command	Meaning
NORMAL	POF	Power OFF
NORMAL	PON	Power ON
NORMAL	MOF	Video audio mute OFF
NORMAL	MON	Video audio mute ON
NORMAL	AON	Audio mute ON
NORMAL	DOF	Status display OFF
NORMAL	DON	Status display ON
NORMAL	FOF	Freeze OFF
NORMAL	FON	Freeze ON
NORMAL	IN1	Input (RGB)
NORMAL	IN2	Input (Video)
NORMAL	IN3	Input (Camera)
RESIZE	RS0	Resize reset
RESIZE	RS1	Resize 1
RESIZE	RS2	Resize 2
RESIZE	RS3	Resize 3
RESIZE	RS4	Resize 4
CAMERA	CW0	Automatic W/B OFF
CAMERA	CW1	Automatic W/B ON
CAMERA	CS0	Text mode OFF
CAMERA	CS1	Text mode ON
CAMERA	CO0	Overlaying mode OFF
CAMERA	CO1	Overlaying mode ON
ADJUST	ARS	Adjustment value reset
ADJUST	ARG	Adjustment value increase

(Continued)

Others

(Continued)

Classification	Command	Meaning
ADJUST	ALF	Adjustment value decrease
ADJUST	AUP	Adjustment value increase
ADJUST	ADW	Adjustment value decrease
KEYSTONE	PKA	Keystone automatic adjustment
KEYSTONE	PKS	Keystone manual adjustment
Image	PAT	Panel automatic adjustment
Image	PVP	Vertical position adjustment
Image	PHP	Horizontal position adjustment
Image	PPH	Phase adjustment
Image	PCK	Clock adjustment
Picture	VBR	Brightness adjustment
Picture	VCL	Color adjustment
Picture	VCN	Contrast adjustment
Picture	VSH	Sharp adjustment
Picture	VTN	Tint adjustment
Picture	VLB	Blue level adjustment
Picture	VLG	Green level adjustment
Picture	VLR	Red level adjustment
Picture	CGN	Camera gain adjustment
Audio	VOL	Volume adjustment
Audio	VTR	Treble adjustment
Audio	VBS	Bass adjustment
Default	LJP	Japanese display setting
Default	LEN	English display setting
Default	LFR	French display setting

Classification	Command	Meaning
Default	LGR	German display setting
Default	LIT	Italian display setting
Default	LSP	Spanish display setting
Default	LP0	Portuguese display setting
Default	PJ0	Floor-mounted front projection
Default	PJ1	Floor-mounted rear projection
Default	PJ2	Ceiling-mounted front projection
Default	PJ3	Ceiling-mounted rear projection
Default	KR0	RGB input mode (RGB)
Default	KR1	RGB input mode (Y/Pb/Pr)
Default	KV0	Video signal mode (Automatic)
Default	KV1	Video signal mode (60/NTSC/JAPAN)
Default	KV2	Video signal mode (60/NTSC/3.58)
Default	KV3	Video signal mode (60/NTSC/4.43)
Default	KV4	Video signal mode (60/PAL/3.58)
Default	KV5	Video signal mode (60/PAL/4.43)
Default	KV6	Video signal mode (50/NTSC/3.58)
Default	KV7	Video signal mode (50/NTSC/4.43)
Default	KV8	Video signal mode (50/PAL/3.58)
Default	KV9	Video signal mode (50/PAL/4.43)
Default	KVA	Video signal mode (50/SECAM/4.43)
Default	MO0	OSD mute OFF
Default	MO1	OSD mute ON
Save	DRS	Adjustment value preset
Save	DSV	Adjustment value saving

Specifications

Main unit

Power requirements
AC 100 – 240V 50/60Hz

Power consumption
TLP450U, TLP470U : 220W
TLP451U, TLP471U : 235W
TLP650U, TLP670U : 220W
TLP651U, TLP671U : 235W
TLP650A : 200W
TLP651A : 210W

Mass
TLP450U, TLP470U : 3.7 Kg
TLP451U, TLP471U : 4.5 Kg
TLP650U, TLP670U : 3.7 Kg
TLP651U, TLP671U : 4.5 Kg
TLP650A : 3.7 Kg
TLP651A : 4.5 Kg

Dimensions
TLP450U, TLP650U, TLP650A, TLP470U, TLP670U :
318 x 87 x 232 (mm) (W/H/D)
(Including the projecting sections)

TLP451U, TLP651U, TLP651A, TLP471U, TLP671U :
318 x 87 x 288 (mm) (W/H/D)
(Including the projecting sections)

Ambient environment
Temperature : 0°C to 35°C
Humidity : 30% to 70% RH

Lamp
TLP450U, TLP451U, TLP650U, TLP651U, TLP470U, TLP471U, TLP670U, TLP671U :
UHP lamp 150W

TLP650A, TLP651A :
UHP lamp 120W

Speaker
1W (monaural)

RGB INPUT
RGB signal : (D-sub 15-pin)
Audio: 1V(p-p), more than 22kΩ, ø3.5mm stereo mini jack

VIDEO INPUT
S-video signal : Mini DIN 4-pin
Video signal : 1V(p-p), 75Ω
Audio : 1V(p-p), more than 22kΩ, RCA pin jack

MONITOR OUTPUT
RGB signal : D-sub 15-pin
Audio : 1V(p-p), less than 2.2kΩ, ø3.5mm stereo mini jack

CONTROL terminal
Mini DIN 8-pin (RS-232C)

Cabinet Material
ABS resin

Liquid crystal display

Projection system
3-pannels transmission

Panel size
0.9 inches

Driving system
TFT active matrix

Picture elements
TLP450U, TLP451U, TLP470U, TLP471U :
480,000 pixels (800 x 600 dots) x 3

TLP650U, TLP651U, TLP650A, TLP651A, TLP670U, TLP671U :
786,432 pixels (1024 x 768 dots) x 3

Projection lens

Lens
Zooming lens F = 1.8 – 2.1
f = 36 – 47mm

Focusing
Manual operation

Zooming
Manual operation

Document imaging camera

Lens
F = 1.8 – 2.3, f = 5.8 – 23.2mm

Focus
Manual operation

Iris
Auto/Level adjustment allowed

Image element
1/3 inch CCD

Total picture elements
810,000 pixels

Resolution
Horizontal 1024, vertical 768

Lighting
LED light

(Continued)

Others

(Continued)

Accessories

Wireless remote control 1

AA size battery 2

Power cord 1

RGB cable 1 (3m)

Adapter for Macintosh computers 1

PC audio cable 1 (3m)

Audio/Video cable 1 (3m)

Lens cover 1

REMOTE MOUSE RECEIVER 1

IBM/MAC mouse cable
(for REMOTE MOUSE RECEIVER) 1

PS/2 mouse adapter
(for REMOTE MOUSE RECEIVER) 1

MAC mouse adapter
(for REMOTE MOUSE RECEIVER) 1

USB mouse cable
(for REMOTE MOUSE RECEIVER) 1

Carrying case 1

The design and specifications are subject to change without notice.

Trademarks

NEC, PC-98 series are trademarks of NEC Corporation.

IBM, DOS/V, VGA, SVGA, XGA, SXGA, UXGA are trademarks or registered trademarks of International Business Machines Corporation.

Macintosh is a registered trademark of Apple Computer, Inc.

Windows is a registered trademark of Microsoft Corporations in the U.S. and other country.

LIMITED WARRANTY

TOSHIBA TLP600/400 Series 3LCD Data Projector

Toshiba America Consumer Products, Inc. (TACP) makes the following limited warranties.

These limited warranties extend to the original end-user purchaser.

Limited two (2) Years Warranty of Parts and Labor

TACP warrants this product and its parts against defects in materials or workmanship for a period of two years after the date of original retail purchase.

For a period of two years after the date of original retail purchase, TACP will repair a defective product or a part, without charge to you.

This warranty also covers accessories of 3LCD Data Projector.

This warranty period of the lamp is ninety (90) days.

Your Responsibility

The above warranties are subject to the following conditions.

1. You must retain your bill of sale or provide other proof of purchase.
2. You must make a written notification within thirty (30) days after your discovery of a defective product or part.
3. All warranty servicing of this product or parts must be made by TACP or a service facility authorized by TACP.
4. These warranties are effective only if the product is purchased and operated in the USA.
5. Labor service charges for installation and adjustment of customer controls are not covered by this warranty.
6. Warranties extend only to defects in materials or workmanship as limited above and do not extend to any product or parts which have been lost or discarded by you or to damage to products or parts caused by misuse, accident, improper installation, improper maintenance or use in violation of instructions furnished by us; or to units which have been altered or modified without authorized of TACP or to damage to product or parts thereof which have had the serial number removed, altered, defaced or rendered illegible.
7. If it is determined after investigation that the claimed problem was not covered with this warranty, you shall pay the cost of investigation at prevailing rate.

Step-by-step procedure how to obtain warranty service

To obtain warranty servicing, you should:

1. Read the owners manual thoroughly before operating.
2. Please contact your dealer for an immediate service and an advice.
3. If your dealer is not able to assist you, please contact TACP Service Center listed below or a servicing facilities authorized by TACP for a warranty service within thirty (30) days after you find a defective product or part.
4. Arrange for a delivery of the product to TACP Service Center or a servicing facilities authorized by TACP.
5. The shipment of the product must be insured, safely and securely packed, preferably in the original carton or a carton with an equivalent protection. A letter explaining the defect and also a copy of the bill of sale or other proof of purchase must be enclosed. All transportation and insurance charges must be prepaid by you.

(Continued)

Others

(Continued)

6. The repaired product is returned freight prepaid to the purchaser after warranty servicing.
7. If you have any questions about service, please contact the following TACP Service Center.

TACP is not obligated to provide purchasers with a substitute unit during the warranty period.

82 Totowa Rd., Wayne,
NJ 07470, U.S.A.
Phone: (973) 628-8000
Fax: (973) 628-1875
Toll Free for Service Call: 1-800-631-3811

TOSHIBA AMERICA CONSUMER PRODUCTS, INC.