myprojectorlamps.com

The most trusted, dependable name in projector lamp sales.

http://www.myprojectorlamps.com

http://www.myprojectorlamps.ca

http://www.myprojectorlamps.eu

The following projector manual has not been modified or altered in any way.

TOSHIBA

PICTURE BY DLP™ A TEXAS INSTRUMENTS TECHNOLOGY

Installation Guide

Integrated High Definition DLP™ Projection Television

50HM66
56HM66
50HMX96
56HMX96
62HM196
72HM196
62MX196
72MX196
62MZ196
72MZ196

TOSHIBA AMERICA CONSUMER PRODUCTS, L.L.C. UL REGISTERED FIRM ISO 14001 FILE No. A9645

© 2006 TOSHIBA CORPORATION
All Rights Reserved

YC/N VX1A00004000

Dear Customer,

Thank you for purchasing this Toshiba TV. This manual will help you use the many exciting features of your new TV. **Before operating the TV, please read this manual completely**, and keep it nearby for future reference.

Safety Precautions

WARNING: **TO REDUCE THE RISK OF FIRE OR ELECTRIC SHOCK, DO NOT EXPOSE THIS APPLIANCE TO RAIN OR MOISTURE.**

WARNING
RISK OF ELECTRIC SHOCK DO NOT OPEN.

WARNING: TO REDUCE THE RISK OF ELECTRIC SHOCK, DO NOT REMOVE COVER (OR BACK). NO USER-SERVICEABLE PARTS INSIDE. REFER SERVICING TO QUALIFIED SERVICE PERSONNEL. (This does not apply to "Lamp unit replacement and care" in the *Operating Guide*.)

The lightning flash with arrowhead symbol, within an equilateral triangle, is intended to alert the user to the presence of uninsulated "dangerous voltage" within the product's enclosure that may be of sufficient magnitude to constitute a risk of electric shock to persons.

The exclamation point within an equilateral triangle is intended to alert the user to the presence of important operating and maintenance (servicing) instructions in the literature accompanying the appliance.

Lamp Unit Replacement

CAUTION:
HOT SURFACE!

Touching the lamp before it has cooled will result in severe burns. ALLOW THE LAMP TO COOL FOR AT LEAST ONE (1) HOUR BEFORE REPLACING IT.

The lamp in this product has a limited service life. The length of service life varies depending on product use and user settings. If you use the lamp beyond its service life:

- you may notice a reduction in the colors and/or brightness of the picture, at which time you should replace the lamp unit; and
- the strength of the quartz glass in the lamp will be reduced and the lamp may rupture. If the lamp ruptures, the TV will not operate until the lamp unit is replaced.

Dispose of the used lamp unit by the approved method for your area.

See "Lamp unit replacement and care" in the *Operating Guide*.

Note: The lamp unit contains mercury. Disposal of mercury may be regulated due to environmental considerations. For disposal or recycling information, contact your local authorities or the Electronic Industries Alliance (www.eiae.org).

NOTICE OF POSSIBLE TV STAND INSTABILITY

CAUTION: This television is for use only with the Toshiba stand listed in the "Specifications" section in the *Operating Guide*. Use with other carts or stands is capable of resulting in instability causing possible injury.

NOTE TO CATV INSTALLERS IN THE U.S.A.

This is a reminder to call the CATV system installer's attention to Article 820-40 of the U.S. NEC, which provides guidelines for proper grounding and, in particular, specifies that the cable ground shall be connected to the grounding system of the building, as close to the point of cable entry as practical. For additional antenna grounding information, see items 27 and 28 on page 4.

Child Safety

It Makes A Difference Where Your TV Stands

Congratulations on your purchase!
As you enjoy your new TV, keep these safety tips in mind:

The Issue

- ❑ If you are like most consumers, you have a TV in your home. Many homes, in fact, have more than one TV.
- ❑ The home theater entertainment experience is a growing trend, and larger TVs are popular purchases; however, they are not always supported on the proper TV stands.
- ❑ Sometimes TVs are improperly secured or inappropriately situated on dressers, bookcases, shelves, desks, audio speakers, chests, or carts. As a result, TVs may fall over, causing unnecessary injury.

Toshiba Cares!

- ❑ The consumer electronics industry is committed to making home entertainment enjoyable and safe.
- ❑ The Consumer Electronics Association formed the Home Entertainment Support Safety Committee, comprised of TV and consumer electronics furniture manufacturers, to advocate children's safety and educate consumers and their families about television safety.

Tune Into Safety

- ❑ One size does NOT fit all! Use appropriate furniture large enough to support the weight of your TV (and other electronic components).
- ❑ Use appropriate angle braces, straps, and anchors to secure your furniture to the wall (but never screw anything directly into the TV).
- ❑ Carefully read and understand the other enclosed instructions for proper use of this product.
- ❑ Do not allow children to climb on or play with furniture and TVs.
- ❑ Avoid placing any item on top of your TV (such as a VCR, remote control, or toy) that a curious child may reach for.
- ❑ Remember that children can become excited while watching a program and can potentially push or pull a TV over.
- ❑ Share our safety message about this hidden hazard of the home with your family and friends. Thank you!

CEA Consumer Electronics Association

2500 Wilson Blvd.
Arlington, VA 22201 U.S.A.
Tel. 703-907-7600 Fax 703-907-7690
www.CE.org

CEA is the Sponsor, Producer and Manager of the International CES®

Important Safety Instructions

1) **Read these instructions.**
2) **Keep these instructions.**
3) **Heed all warnings.**
4) **Follow all instructions.**

5) **Do not use this apparatus near water.**

6) **Clean only with dry cloth.**

7) **Do not block any ventilation openings.** Install in accordance with the manufacturer's instructions.

8) **Do not install near any heat sources** such as radiators, heat registers, stoves, or other apparatus (including amplifiers) that produce heat.

9) **Do not defeat the safety purpose of the polarized or grounding type plug.** A polarized plug has two blades with one wider than the other.
A grounding type plug has two blades and a third grounding prong. The wide blade or the third prong are provided for your safety. If the provided plug does not fit into your outlet, consult an electrician for replacement of the obsolete outlet.

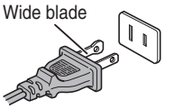

10) **Protect the power cord** from being walked on or pinched, particularly at plugs, convenience receptacles, and the point where they exit from the apparatus.

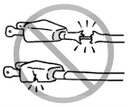

11) **Only use attachments/accessories specified by the manufacturer.**

12) **Use only with the cart, stand, tripod, bracket, or table specified by the manufacturer, or sold with the apparatus.** When a cart is used, use caution when moving the cart/apparatus combination to avoid injury from tip-over.

13) **Unplug this apparatus during lightning storms or when unused for long periods of time.**

14) **Refer all servicing to qualified service personnel.** Servicing is required when the apparatus has been damaged in any way, such as power-supply cord or plug is damaged, liquid has been spilled or objects have fallen into the apparatus, the apparatus has been exposed to rain or moisture, does not operate normally, or has been dropped.

Additional Safety Precautions

14a) Item 14 does not apply to "Lamp unit replacement and care" in the *Operating Guide*.

14b) **CAUTION:** If the TV is dropped and the cabinet or enclosure surface has been damaged or the TV does not operate normally, take the following precautions:
- ALWAYS turn off the TV and unplug the power cord to avoid possible electric shock or fire.
- To prevent personal injury, never handle the damaged television.
- ALWAYS contact a service technician to inspect the TV any time it has been damaged or dropped.

15) **CAUTION:**
- To reduce the risk of electric shock, do not use the polarized plug with an extension cord, receptacle, or other outlet unless the blades can be inserted completely to prevent blade exposure.
- To prevent electric shock, match wide blade of plug to wide slot; fully insert.

16) **WARNING: This product contains a lamp to project the picture, and requires special safety precautions:**
- See the *Operating Guide* for instructions on lamp unit replacement and care.
- **DO NOT attempt to service this product except as specified in the "Lamp unit replacement and care" section in the *Operating Guide*.** The only user-serviceable item in this product is the lamp unit.

Installation, Care, and Service

Installation

Follow these recommendations and precautions and heed all warnings when installing your TV:

17) Never modify this equipment. Changes or modifications may void: a) the warranty, and b) the user's authority to operate this equipment under the rules of the Federal Communications Commission.

18) **DANGER: RISK OF SERIOUS PERSONAL INJURY, DEATH, OR EQUIPMENT DAMAGE!**
Never place the TV on an unstable cart, stand, or table. The TV may fall, causing serious personal injury, death, or serious damage to the TV.

19) Never place or store the TV in direct sunlight; areas subject to excessive dust or vibration; or locations with temperatures at or below 41°F (5°C). See "Specifications" section in the *Operating Guide* on operating conditions.

20) Always place the TV on the applicable optional TV stand(s) listed in the "Specifications" section in the *Operating Guide* (if available for this TV model) or on a sturdy, level, stable surface that can safely support the size and weight of the unit. See "Notice of possible TV stand instability" and "Child Safety" on page 2.

21) The apparatus shall not be exposed to dripping or splashing and that no objects filled with liquids, such as vases, shall be placed on the apparatus.

22) Always place the back of the television at least one (1) inch away from any vertical surface (such as a wall) to allow proper ventilation.

23) Never block or cover the slots or openings in the TV cabinet back, bottom, and sides. Never place the TV:
- on a bed, sofa, rug, or similar surface;
- too close to drapes, curtains, or walls; or
- in a confined space such as a bookcase, built-in cabinet, or any other place with poor ventilation.

The slots and openings are provided to protect the TV from overheating and to help maintain reliable operation of the TV.

24) Never allow anything to rest on or roll over the power cord, and never place the TV where the power cord is subject to wear or abuse.

25) Never overload wall outlets and extension cords.

26) Always operate this equipment from a 120 VAC, 60 Hz power source only.

27) Always make sure the antenna system is properly grounded to provide adequate protection against voltage surges and built-up static charges (see Section 810 of the National Electric Code).

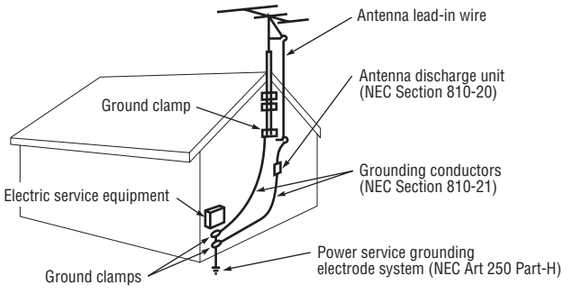

28) **DANGER: RISK OF SERIOUS PERSONAL INJURY OR DEATH!**

- Use extreme care to make sure you are never in a position where your body (or any item you are in contact with, such as a ladder or screwdriver) can accidentally touch overhead power lines. Never locate the antenna near overhead power lines or other electrical circuits.
- Never attempt to install any of the following during lightning activity: a) an antenna system; or b) cables, wires, or any home theater component connected to an antenna or phone system.

Care

For better performance and safer operation of your TOSHIBA TV, follow these recommendations and precautions:

29) Always sit approximately 10–25 feet away from the TV and as directly in front of it as possible. The picture can appear dull if you sit too far to the left or right of the TV, or if sunlight or room lights reflect on the screen. Turn the TV off to check for reflections on the screen, and then remove the source of reflections while viewing the TV.

30) Always unplug the TV before cleaning. Never use liquid or aerosol cleaners. Clean only with a soft, dry cloth. Do not spray volatile compounds, such as insecticide, on the cabinet. This may discolor or damage the cabinet.

31) **WARNING: RISK OF ELECTRIC SHOCK!**

Never spill liquids or push objects of any kind into the TV cabinet slots.

32) If the air temperature rises suddenly (for example, when the TV is first delivered), condensation may form on the lenses. This can make the picture appear distorted or the color appear faded. If this happens, turn off the TV for 6 to 7 hours to allow the condensation to evaporate.

33) For added protection of your TV from lightning and power surges, always unplug the power cord and disconnect the antenna from the TV if you leave the TV unattended or unused for long periods of time.

34) During normal use, the TV may make occasional snapping or popping sounds. This is normal, especially when the unit is being turned on or off. If these sounds become frequent or continuous, unplug the power cord and contact a Toshiba Authorized Service Center.

35) **Special care for DLP™ (Digital Light Processing) units:**

- The lamp unit in this product has a limited service life. The length of service life varies depending on product use or user settings. If you use the lamp beyond its service life:
- you may notice a reduction in the colors and/or brightness of the picture, at which time you should replace the lamp unit; and
- the strength of the quartz glass in the lamp will be reduced and the lamp may rupture. If the lamp ruptures, the TV will not operate until the lamp unit is replaced.

See “Lamp unit replacement and care” in the *Operating Guide*.

- Dispose of the used lamp unit by the approved method for your area.
- The lamp unit contains mercury. Disposal of mercury may be regulated due to environmental considerations. For disposal or recycling information, please contact your local authorities or the Electronic Industries Alliance (www.eiae.org).

Service

36) **WARNING: RISK OF ELECTRIC SHOCK!**

Never attempt to service the TV yourself, except as specified in the “Lamp unit replacement and care” section in the *Operating Guide*. Opening and removing the covers may expose you to dangerous voltage or other hazards. Failure to follow this WARNING may result in death or serious injury. Refer all servicing not specified in this manual to a Toshiba Authorized Service Center.

37) If you have the TV serviced:

- Ask the service technician to use only replacement parts specified by the manufacturer.
- Upon completion of service, ask the service technician to perform routine safety checks to determine that the TV is in safe operating condition.

38) When the TV reaches the end of its useful life, ask a qualified service technician to properly dispose of the TV.

Note: *The lamp unit contains mercury. Disposal of mercury may be regulated due to environmental considerations. Dispose of the used lamp unit by the approved method for your area.*

For disposal or recycling information, please contact your local authorities or the Electronic Industries Alliance (www.eiae.org).

Digital Light Processing™, DLP™ and the DLP™ medallion are trademarks of Texas Instruments.

Welcome to Toshiba

Thank you for purchasing this Toshiba TV, one of the most innovative DLP™ projection TVs on the market.
This digital television is capable of receiving analog basic, digital basic and digital premium cable television programming by direct connection to a cable system providing such programming. A security card provided by your cable operator is required to view encrypted digital programming. Certain advanced and interactive digital cable services such as video-on-demand, a cable operator's enhanced program guide and data-enhanced television services may require the use of a set-top box. For more information call your local cable operator.
We have provided three separate Guides to facilitate the installation and operation of your TV.

Please use the Guides in the order shown below to get the most enjoyment from your new TV.

1) The "*Installation Guide*" explains how to connect your TV to your antenna and equipment.
2) The "*Operating Guide*" provides step-by-step instructions for using your TV's many features.
3) The "*TV Guide On Screen™ Interactive Program Guide*" explains how to set up and navigate the TV Guide On Screen™ system in your TV.

Notes:

- *Models 50HM66 and 56HM66 do not have the TV Guide On Screen™ feature; therefore, the TV Guide On Screen™ Interactive Program Guide is not provided in the accessory pack.*
- *Screen captures provided in this Installation Guide may not match the screens that you see on your TV. Please refer to your Operating Guide.*

Terminal Specifications for DLP™ Projection Televisions

This *Installation Guide* includes installation instructions for several television models. Please confirm your TV's terminal specifications in the following table to determine which connection in this Guide is appropriate for your particular TV.

Note: *The model number is on the back of your TV.*

Input/Output Terminals	50/56HM66	62/72HM196	50/56HMX96	62/72MX196	62/72MZ196
RF Input	Yes (2)	Yes (2)	Yes (2)	Yes (2)	Yes (2)
Video/Audio Input (composite video/analog audio)	Yes (2 sets)	Yes (2 sets)	Yes (2 sets)	Yes (2 sets)	Yes (2 sets)
S-Video Input	Yes (2 sets)	Yes (2 sets)	Yes (2 sets)	Yes (2 sets)	Yes (2 sets)
ColorStream HD Input	Yes (2 sets)	Yes (2 sets)	Yes (2 sets)	Yes (2 sets)	Yes (2 sets)
HDMI Input	Yes (2)	Yes (2)	Yes (2)	Yes (2)	Yes (2)
PC Input	No	No	Yes	Yes	Yes
Video/Audio Output (composite video/analog audio)	Yes	Yes	Yes	Yes	Yes
Variable Audio Output (analog)	Yes	Yes	Yes	Yes	Yes
Digital Audio Output (optical)	Yes	Yes	Yes	Yes	Yes
Ethernet	No	Yes	Yes	Yes	Yes
IR In	No	No	No	No	Yes
IR Out (pass-through)	Yes	Yes	Yes	Yes	Yes
G-LINK™	No	Yes	Yes	Yes	Yes
CableCARD™ Slot	Yes	Yes	Yes	Yes	Yes
TV Guide On Screen™ System	No	Yes	Yes	Yes	Yes

Contents

Important Safety Instructions 3

Installation, Care, and Service 3

Welcome to Toshiba 5

Terminal Specifications for DLP™ Projection Televisions 5

Connecting your TV 7

Overview of cable types 7
About the connection illustrations 8
Connecting a digital CableCARD™. 8
Connecting a VCR and antenna or Cable TV (no Cable box) 9
Connecting a VCR and Cable box 10
Connecting a DVD player with ColorStream® (component video), a VCR, and a satellite receiver 11
Connecting a VCR with S-video and a cable box 12
Connecting an HDMI™ or DVI device to the HDMI input 13
Connecting a device to the IR OUT infrared terminal using the IR blaster cable for IR pass-through device control 14
Connecting an IR receiver/repeater control system to the IR IN infrared terminal 15
Connecting a camcorder 15
Connnecting a digital audio system 16
Connecting an analog audio system 16
G-LINK™ connection 17
Connecting a personal computer (PC) 18
Connecting a home network 19

Index 21

Overview of cable types

Coaxial (F-type) cable

Coaxial (F-type) cable is used for connecting your antenna, cable TV service, and/or cable converter box to the **ANT 1** and/or **ANT 2** RF inputs on your TV.

Standard A/V cables (red/white/yellow)

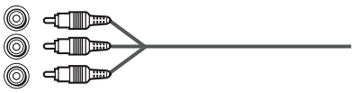

Standard A/V cables (composite video) usually come in sets of three, and are for use with video devices with analog audio and composite video output. These cables (and the related inputs on your TV) are typically color-coded according to use: yellow for video, red for stereo right audio, and white for stereo left (or mono) audio.

S-video cable

S-video cable is for use with video devices with S-video output. Separate audio cables are required for a complete connection.

Note: *An S-video cable provides better picture performance than a composite video cable. If you connect an S-video cable, be sure to disconnect the standard (composite) video cable or the picture performance will be unacceptable.*

Component video cables (red/green/blue)

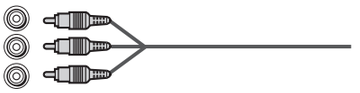

Component video cables come in sets of three and are for use with video devices with component video output. (ColorStream® is Toshiba's brand of component video.) These cables are typically color-coded red, green, and blue. Separate audio cables are required for a complete connection.

Note: *Component video cables provide better picture performance than a standard (composite) video or S-video cable.*

HDMI™ cable

HDMI (High-Definition Multimedia Interface) cable is for use with devices with an HDMI output. An HDMI cable delivers digital audio and video in its native format. This cable carries both video and audio information; therefore, separate audio cables are not required for a complete HDMI device connection (☞ page 13).

Note: *HDMI cable provides better picture performance than a standard (composite) video or S-video cable.*

Dual-wand IR blaster/G-LINK™ cable

Dual-wand IR blaster/G-LINK™ cable is for use with video devices with IR (infrared) remote control. This cable is for connection to the **G-LINK™** terminal (☞ page 17) to enable TV Guide On Screen™ recording features (☞ *TV Guide On Screen™ Interactive Program Guide*). This cable also can be used with the TV's IR pass-through feature (☞ page 14).

Notes:

- *This applies only to TV models that have the TV Guide On Screen™ feature. To verify whether your TV model has this feature, see the table on page 5.*
- *The IR blaster/G-LINK™ cable included with your TV have specific characteristics that allow them to work properly with this TV's* ***IR OUT*** *and* ***G-LINK™*** *ports. Never use other aftermarket IR blaster or G-LINK™ cables with this TV. Other cables may not function properly and can cause damage. THIS TYPE OF DAMAGE IS NOT COVERED BY YOUR TOSHIBA WARRANTY.*

Optical audio cable

Optical audio cable is for connecting receivers with Dolby Digital or PCM (pulse-code modulation) optical audio input to the TV's **DIGITAL AUDIO OUT** terminal (☞ page 16).

Analog RGB (15-pin) computer cable

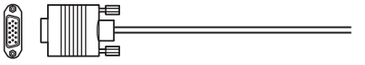

Analog RGB (15-pin) computer cable is for connecting a PC to the TV's **PC IN** terminal (☞ page 18).

Ethernet (RJ-45) cable

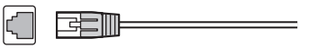

Ethernet (RJ-45) cable is used to connect the TV to your home network (☞ page 19 and the *Operating Guide*).

About the connection illustrations

You can connect different types and brands of devices to your TV in several different configurations. The connection illustrations in this manual are representative of typical device connections only. The input/output terminals on your devices may differ from those illustrated herein. For details on connecting and using your specific devices, refer to each device's owner's manual.

Connecting a digital CableCARD™

This digital television is capable of receiving analog basic, digital basic, and digital premium cable television programming by direct connection to a cable system providing such programming.

A security card (such as a digital CableCARD™), provided by your cable operator, is required to view encrypted digital programming.

Certain advanced and interactive digital cable services (such as video-on-demand, a cable operator's enhanced program guide, and data-enhanced television services) will not work with the use of a CableCARD™ and may require the use of a separate set-top box from your cable operator.

For more information, contact your local cable operator.

You will need:

- digital CableCARD™ (contact your cable operator)
- digital cable subscription service (contact your cable operator)

TV back panel

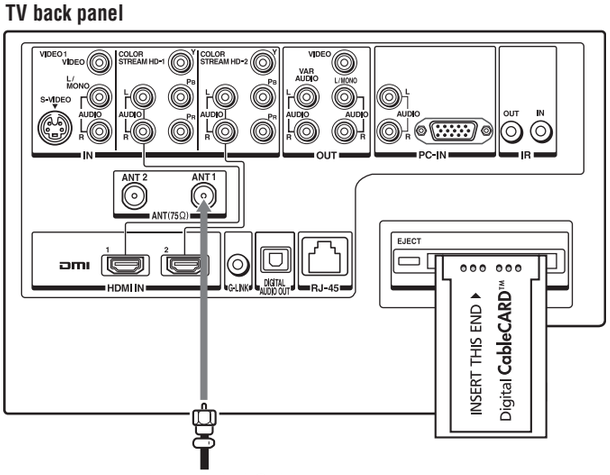

From digital Cable service

To view encrypted digital channels:

1 Connect your digital Cable TV cable to **ANT 1**.

2 With the front of the CableCARD™ facing up, insert it into the **CableCARD™** slot on the back of the TV (see illustration below left).

3 After the CableCARD™ is inserted, a CableCARD™ option appears in the Applications menu, with informational screens provided by your digital CableCARD™ service. See "Viewing the CableCARD™ menu" in the *Operating Guide* for additional information.

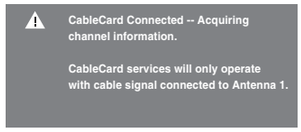

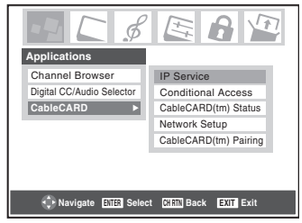

Notes:

- *Connect the cable from your digital cable TV service directly to **ANT 1** only. If you connect the digital cable through a VCR first and/or to **ANT 2**, the TV may not receive the signals correctly.*
- *Always use the **EJECT** button to remove the CableCARD™. Removing the CableCARD™ without pressing **EJECT** can damage the CableCARD™ and/or TV. Such damage is NOT covered under your Toshiba warranty.*
- *Never insert any object or card other than a CableCARD™ (including, without limitation, a PCMCIA card) into the **CableCARD™** slot.*
- *Always make sure the CableCARD™ is facing the correct direction.*
- *When using a CableCARD™, you do not need to program channels into the TV memory. The CableCARD™ automatically loads the cable channel list into the TV's channel memory (☞ Operating Guide).*
- *The CableCARD™ may take about 5 minutes to "pair" with the TV and download channel information. CableCARD™ information and channels will not be available until this process is completed.*
- *Connecting your TV directly to the Audio/Video output of your Set-Top-Box will assure a more vivid picture and enhance your viewing enjoyment.*

CableCARD™ technology, like all new and emerging technology, may from time to time experience compatibility issues due to the different ways in which television manufacturers and cable system operators implement the CableCARD™ specifications. Most issues can be easily resolved. If you experience any performance-related CableCARD™ issues with your Toshiba television, please contact the following:

In the U.S.:

- Call TACP Consumer Solutions at (800) 631-3811
- Or visit **http://www.tacp.com/customersupport/contact.asp.**

In Canada:

- Call TCL Customer Service at 1-800-268-3404.

CableCARD is a trademark of Cable Television Laboratories, Inc.

Connecting a VCR and antenna or Cable TV (no Cable box)

You will need:

- signal splitter
- coaxial cables
- standard A/V cables
  - *For better picture performance, if your VCR has S-video, use an S-video cable (plus the audio cables) instead of the standard video cable. Do not connect both types of video cable to **VIDEO 1** at the same time or the picture performance will be unacceptable.*
  - *If you have a mono VCR, connect **L/MONO** on the TV to your VCR's audio out terminal using the white audio cable only.*

Note: *The **VIDEO/AUDIO OUT** terminals output signals from the **ANT 1**, **ANT 2**, **VIDEO 1**, and **VIDEO 2** terminals when the applicable input mode is selected.**

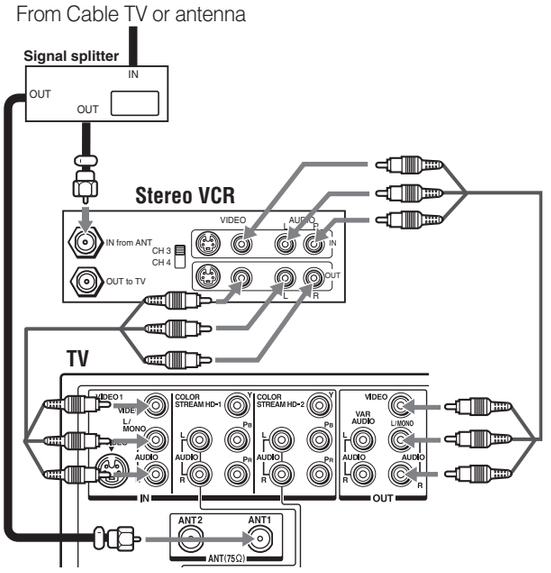

To view the antenna or Cable signal:

Select the **ANT 1** video input source on the TV.*

To view the VCR:

Turn ON the VCR. Select the **VIDEO 1** video input source on the TV.*

* To select the video input source, press **INPUT** on the remote control (☞ *Operating Guide*). To program the TV remote control to operate other devices, see the *Operating Guide*, Chapter 2.

To use the TV Guide On Screen™ recording features (if applicable to your TV model):

1. Connect the G-LINK™ cable according to the instructions (☞ page 17).
2. Make sure the VCR is connected to the **VIDEO/ AUDIO OUT** terminals on the TV (see illustration).
3. Set the VCR to the appropriate line input (refer to your VCR owner's manual for details), and then turn OFF the VCR.
4. See the *TV Guide On Screen™ Interactive Program Guide* for details on setting up and using the TV Guide On Screen™ system.

The unauthorized recording, use, distribution, or revision of television programs, videotapes, DVDs, and other materials is prohibited under the Copyright Laws of the United States and other countries, and may subject you to civil and criminal liability.

In the United States, TV GUIDE and other related marks are registered marks of Gemstar-TV Guide International, Inc. and/or one of its affiliates. In Canada, TV GUIDE is a registered mark of Transcontinental Inc., and is used under license by Gemstar-TV Guide International, Inc.

DLP_Inst.book Page 10 Wednesday, February 22, 2006 6:18 PM

Connecting a VCR and Cable box

You will need:

- signal splitter
- coaxial cables
- standard A/V cables
  - *For better picture performance, if your VCR has S-video, connect an S-video cable (plus the audio cables) instead of the standard video cable. Do not connect both types of video cable to **VIDEO 1** at the same time or the picture performance will be unacceptable.*
  - *If you have a mono VCR, connect **L/MONO** on the TV to your VCR's audio out terminal using the white audio cable only.*
  - *When you use a Cable box, you may not be able to use the remote control to program or access certain features on the TV.*

Note: *The **VIDEO/AUDIO OUT** terminals output signals from the **ANT 1**, **ANT 2**, **VIDEO 1**, and **VIDEO 2** terminals when the appropriate input mode is selected.**

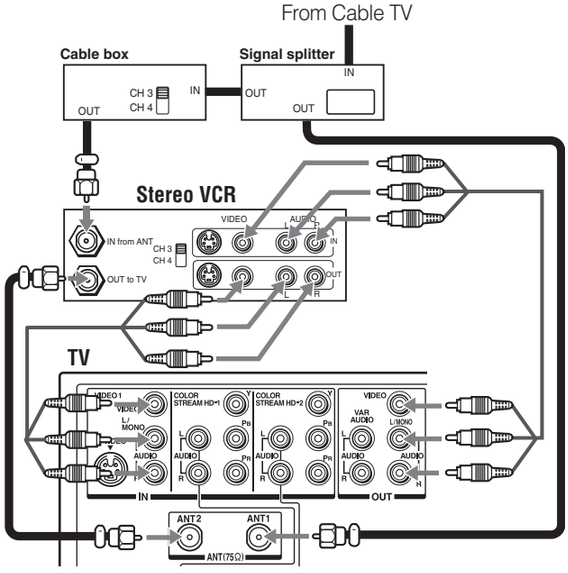

To view basic Cable channels and use the TV's features:

Select the **ANT 1** video input source on the TV.* Use the TV controls (control panel or remote control) to change channels and access the TV's features.

To view basic and premium Cable channels:

Turn OFF the VCR. Select the **ANT 2** video input source on the TV.* Tune the TV to channel 3 or 4 (whichever channel the Cable box output is set to). Use the Cable box controls to change channels.

To view the VCR:

Turn ON the VCR. Select the **VIDEO 1** video input source on the TV.*

* To select the video input source, press **INPUT** on the remote control (☞ *Operating Guide*). To program the TV remote control to operate other devices, see the *Operating Guide*, Chapter 2.

To enable the TV Guide On Screen™ system to work with your cable box and to use the TV Guide On Screen™ recording features (if applicable to your TV model):

1. Connect the G-LINK™ cable according to the instructions (☞ page 17).
2. Make sure the VCR is connected to the **VIDEO/ AUDIO OUT** terminals on the TV (see illustration).
3. Set the VCR to the appropriate line input (refer to your VCR owner's manual for details), and then turn OFF the VCR.
4. See the *TV Guide On Screen™ Interactive Program Guide* for details on setting up and using the TV Guide On Screen™ system.

The unauthorized recording, use, distribution, or revision of television programs, videotapes, DVDs, and other materials is prohibited under the Copyright Laws of the United States and other countries, and may subject you to civil and criminal liability.

DLP Inst (E/F) Web 213:276

DLP_Inst.book Page 11 Wednesday, February 22, 2006 6:18 PM

Connecting a DVD player with ColorStream® (component video), a VCR, and a satellite receiver

Your TV has two sets of ColorStream® (component video) inputs.

You will need:

- signal splitter
- coaxial cables
- standard A/V cables
  - *For better picture performance, if your VCR has S-video, use an S-video cable (plus the audio cables) instead of the standard video cable. Do not connect both types of video cable to **VIDEO 1** at the same time or the picture performance will be unacceptable.*
  - *If you have a mono VCR, connect **L/MONO** on the TV to your VCR's audio out terminal using the white audio cable only.*
- standard audio cables
- component video cables
  - *You can connect the component video cables (plus audio cables) from the DVD player or satellite receiver to either set of **ColorStream** terminals on the TV (**HD-1** or **HD-2**). The **ColorStream HD-1** and **HD-2** terminals can be used with Progressive (480p, 720p) and Interlaced (480i, 1080i) scan systems. A 1080i signal will provide the best picture performance.*
  - *If your DVD player or satellite receiver does not have component video, connect an S-video cable (plus audio cables) to **VIDEO 2** on the side panel. If your DVD player has HDMI video, see page 13.*

***Note:** The **VIDEO/AUDIO OUT** terminals output signals from the **ANT 1**, **ANT 2**, **VIDEO 1**, and **VIDEO 2** terminals when the appropriate input mode is selected.**

* To select the video input source, press **INPUT** on the remote control (☞ *Operating Guide*). To program the TV remote control to operate other devices, see the *Operating Guide*, Chapter 2.

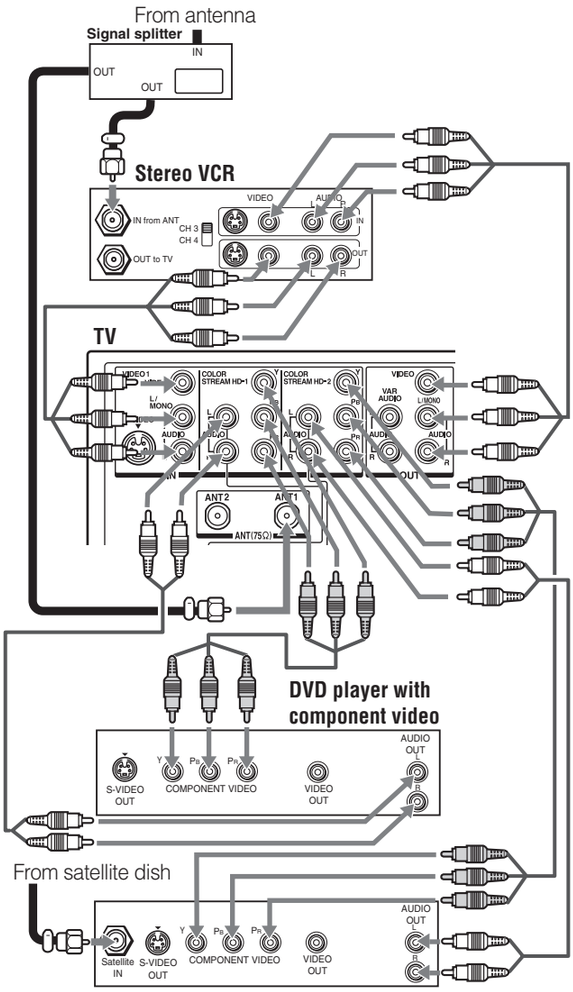

Satellite receiver with component video

To view antenna or Cable channels:

Select the **ANT 1** video input source on the TV.*

To view the DVD player:

Turn ON the DVD player. Select the **ColorStream HD-1** video input source on the TV.*

To view satellite programs using the component video connections or to record satellite programs:

Turn on all three devices. Set the VCR to the appropriate line input (refer to your VCR owner's manual for details). Select the **ColorStream HD-2** video input source on the TV.*

To view the VCR or view and record antenna channels:

Turn ON the VCR. Tune the VCR to the channel you want to watch. Select the **VIDEO 1** video input source on the TV.*

(continued)

DLP Inst (E/F) Web 213:276

DLP_Inst.book Page 12 Wednesday, February 22, 2006 6:18 PM

To record a TV program while watching a DVD:
Turn ON the VCR. Tune the VCR to the channel to record. Select the **ColorStream HD-1** video input source on the TV* to view the DVD.

* To select the video input source, press **INPUT** on the remote control (☞ *Operating Guide*). To program the TV remote control to operate other devices, see the *Operating Guide*, Chapter 2.

To use the TV Guide On Screen™ recording features (if applicable to your TV model):

1. Connect the G-LINK™ cable according to the instructions (☞ page 17).
2. Make sure the VCR is connected to the **VIDEO/ AUDIO OUT** terminals on the TV (see illustration).
3. Set the VCR to the appropriate line input (refer to your VCR owner's manual for details), and then turn OFF the VCR.
4. See the *TV Guide On Screen™ Interactive Program Guide* for details on setting up and using the TV Guide On Screen™ system.

   Note: *The TV Guide On Screen™ system does not receive program listings from or for any satellite service.*

The unauthorized recording, use, distribution, or revision of television programs, videotapes, DVDs, and other materials is prohibited under the Copyright Laws of the United States and other countries, and may subject you to civil and criminal liability.

Connecting a VCR with S-video and a cable box

An S-video connection will provide better picture performance than a standard (composite) video cable. If your VCR does not have S-video, refer to the connection on page 10.

You will need:

- signal splitter
- coaxial cables
- standard A/V cables
- S-video cable
- standard audio cables

Notes:

- *Do not connect both types of video cable to **VIDEO 1** at the same time or the picture performance will be unacceptable.*
- *See page 10 for details on the VCR and Cable box connection.*

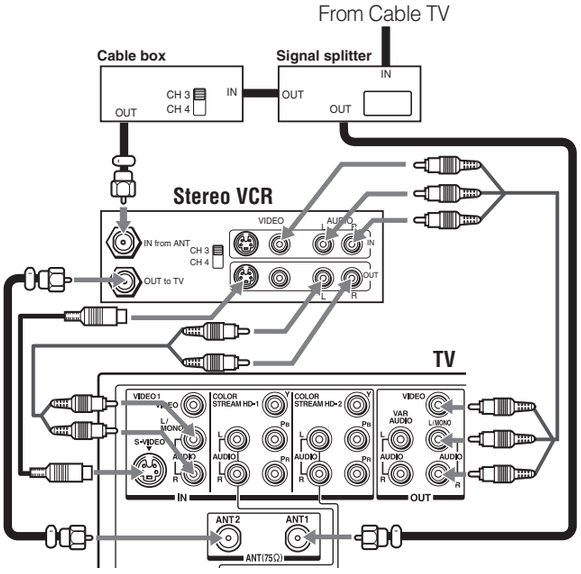

DLP Inst (E/F) Web 213:276

DLP_Inst.book Page 13 Tuesday, February 28, 2006 3:23 PM

Connecting an HDMI™ or DVI device to the HDMI input

The HDMI input on your TV receives digital audio and uncompressed digital video from an HDMI source device, or uncompressed digital video from a DVI (Digital Visual Interface) source device.

This input is designed to accept HDCP (High-Bandwidth Digital-Content Protection) program material in digital form from EIA/CEA-861-861B–compliant[1] consumer electronic devices (such as a set-top box or DVD player with HDMI or DVI output).

The HDMI input is designed for best performance with 1080i signals but will also accept and display 480i, 480p and 720p signals.

NOTE: DO NOT CONNECT A PC USING THE HDMI PORT. Always use the TV's **PC IN** (VGA) port to connect a PC.

- *The **HDMI** port is not designed to support input from a PC.*
- *Only models that include a **PC IN** (VGA) port are suitable for connection to a PC.*

To connect an HDMI device, you will need:

- one HDMI cable (type A connector) per HDMI device
  - *For proper operation, it is recommended that you use as short an HDMI cable as possible. You should not encounter difficulty if you use an HDMI cable shorter than 16.4 ft (5m).*
  - *HDMI cable transfers both video and audio. Separate analog audio cables are not required (see illustration).*
  - *See "Setting the HDMI™ audio mode" in the Operating Guide.*

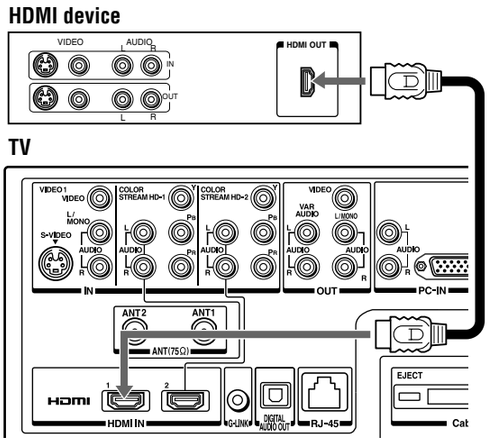

Note: *If the audio output mode of the HDMI device is other than the PCM mode, the sound does not output from the TV's speakers (models 50HM66 and 56HM66 only).*

To connect a DVI device, you will need:

- one HDMI-to-DVI adapter cable (HDMI type A connector) per DVI device
  - *For proper operation, the length of an HDMI-to-DVI adapter cable should not exceed 9.8 ft (3m). The recommended length is 6.6 ft (2m).*
- one pair of standard analog audio cables per DVI device
  - *An HDMI-to-DVI adapter cable transfers video only. Separate analog audio cables are required (see illustration).*
  - *See "Setting the HDMI™ audio mode" in the Operating Guide.*

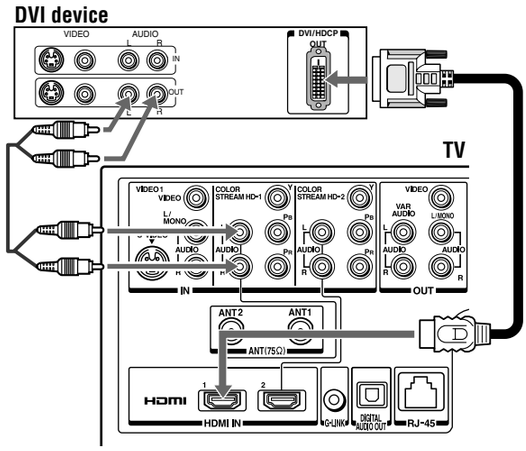

Note: *To ensure that the HDMI or DVI device is reset properly, it is recommended that you follow these procedures:*

- *When turning on your electronic components, **turn on the TV first**, and then the HDMI or DVI device.*
- *When turning off your electronic components, **turn off the HDMI or DVI device first**, and then the TV.*

[1] EIA/CEA-861-861B compliance covers the transmission of uncompressed digital video with high-bandwidth digital content protection, which is being standardized for reception of high-definition video signals. Because this is an evolving technology, it is possible that some devices may not operate properly with the TV.

HDMI, the HDMI logo and High-Definition Multimedia Interface are trademarks or registered trademarks of HDMI Licensing LLC.

DLP Inst (E/F) Web 213:276

Connecting a device to the IR OUT infrared terminal using the IR blaster cable for IR pass-through device control

You can use the TV's **IR OUT** terminal (infrared pass-through) to remotely operate –through the TV– many infrared remote-controlled devices (such as a Toshiba infrared remote-controlled VCRs or DVD player) enclosed within an entertainment center or similar cabinet. Without the **IR OUT** connection, the device typically would need to be visible to operate it remotely.

You will need:

- dual-wand IR blaster cable
- other audio/video cables as required to connect the device(s) to the TV (☞ pages 9–13)

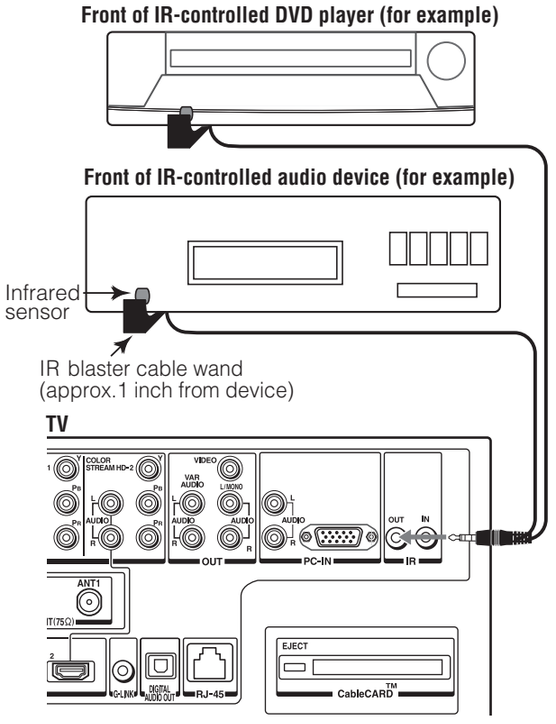

To connect the IR blaster cable:

1 Locate the infrared sensor on the front of your device. This sensor is marked on some devices.*

2 Align one of the IR blaster cable's wands about 1 inch away from the infrared sensor on the front of the device and attach it using double-sided mounting tape. If you have a second device, attach the second wand in a similar manner. (See illustration.)

Note: *If you do not have a second device, coil the second wand with a rubber band and leave it behind the TV.*

3 Plug the IR blaster cable's plug into the TV's **IR OUT** terminals.

To control the device(s):

Point either the device's remote control or the TV remote control (that you previously programmed to operate the device; ☞ *Operating Guide*, Chapter 2) toward the front of the TV and press the button for the desired function. The signal passes from the remote control through the TV to the device via the IR blaster cable.

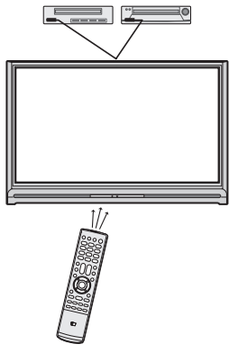

Notes:

- *If you use the device's remote control to operate the device, you also will need to use the TV's remote control to operate the TV.*
- *The IR pass-through feature does not support all IR-controlled devices; satisfactory performance may not be attainable with certain devices.*

*If you cannot locate the device's infrared sensor:

1 Turn OFF the device.

2 Starting at the lower left corner of the device, place the end of the device's remote control (with the infrared emitter) so it touches the front of the device and press **POWER**. (Do not use the TV's remote control for this step.)

3 If the device turns on, the point at which the remote control touched the device is the location of the sensor.

4 If the device does not turn on, move the remote control slightly to the right and press **POWER** again.

5 Repeat step 4 until you locate the device's infrared sensor.

Connecting an IR receiver/repeater control system to the IR IN infrared terminal

For additional control options for your home theater system, you can connect an IR receiver/repeater control system (not included) to the TV's **IR IN** terminal.

You will need:

- IR cable

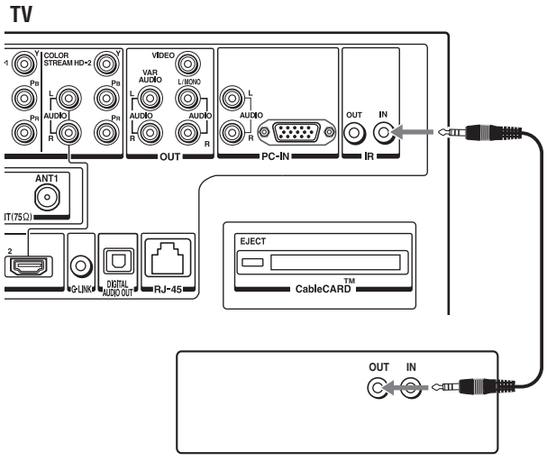

Back of IR receiver/repeater control system (not included)

To operate the TV with this connection, point the Toshiba TV remote control toward the front of the IR receiver/repeater control system.

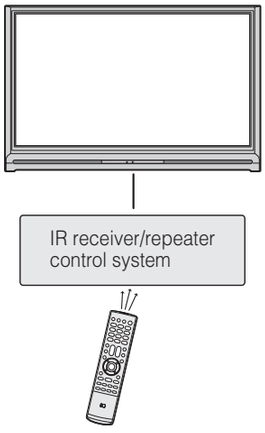

Connecting a camcorder

You will need:

- standard A/V cables
  - *For better picture performance, if your camcorder has S-video, use an S-video cable (plus the audio cables) instead of the standard video cable. Do not connect both types of video cable to **VIDEO 2** at the same time or the picture performance will be unacceptable.*

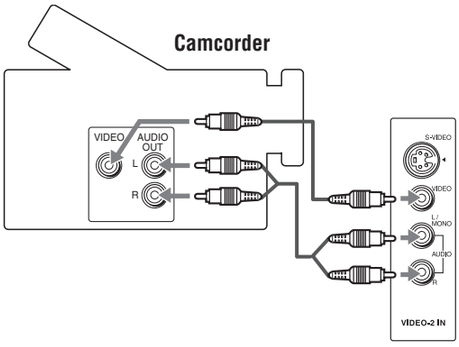

VIDEO 2 inputs on TV right side panel

To view the camcorder video:

Select the **VIDEO 2** video input source on the TV.*

* To select the video input source, press **INPUT** on the remote control (☞ *Operating Guide*). To program the TV remote control to operate other devices, see the *Operating Guide*, Chapter 2.

Connecting a digital audio system

The TV's **DIGITAL AUDIO OUT** terminal outputs a Dolby®* Digital DOLBY DIGITAL or 2-channel down-mixed PCM (pulse-code modulation) signal for use with an external Dolby® Digital decoder or other external audio system with optical audio input.

You will need:

- optical audio cable (Use an optical audio cable that has the larger "TosLink" connector and not the smaller "mini-optical" connector.)

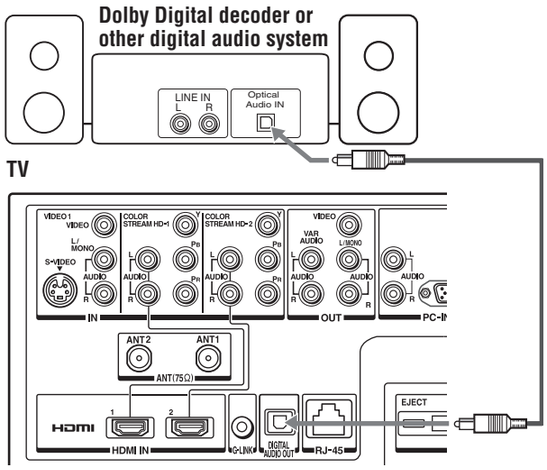

To control the audio:

1. Turn on the TV and the digital audio device.
2. Press **MENU** on the TV's remote control and open the **Audio** menu.
3. Highlight **Audio Setup** and press **ENTER**.

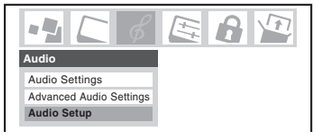

4. In the **Optical Output Format** field, select either **Dolby Digital** or **PCM**, depending on your device (☞ "Selecting the optical audio output format" in the *Operating Guide*).

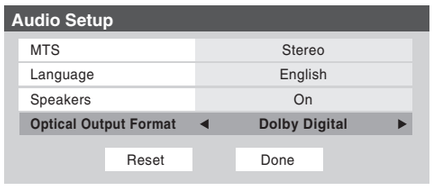

5. Turn off the TV's built-in speakers in the same **Audio Setup** menu. Also see "Turning off the built-in speakers" in the *Operating Guide*.

Notes:

- *Some audio systems may not be compatible with Dolby Digital bitstream signals. Older audio systems that are not compatible with standard optical out signals may not work properly, creating a high noise level that may damage speakers or headphones. THIS DAMAGE IS NOT COVERED BY YOUR WARRANTY.*
- *The **DIGITAL AUDIO OUT** terminal outputs signals only when receiving digital broadcasts with the TV in single-window mode.*
- *The **DIGITAL AUDIO OUT** terminal may not output some digital audio sources because of copy restrictions.*

* Manufactured under license from Dolby Laboratories. Dolby and the double-D symbol are registered trademarks of Dolby Laboratories.

Connecting an analog audio system

This connection allows you to use external speakers with an external analog audio amplifier to adjust the sound level.

You will need:

- standard audio cables

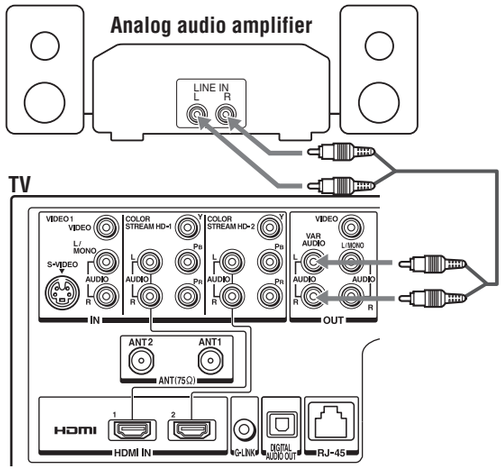

To control the audio:

1. Turn on the TV and the stereo amplifier.
2. Turn off the TV's built-in speakers (☞ "Turning off the built-in speakers" in the *Operating Guide*).

Note: *To hear sound when using an external audio amplifier, the volume of both the TV and the amplifier must be set to a reasonable listening level.*

G-LINK™ connection

Note: *The G-LINK™ connection applies only to TV models that have the TV Guide On Screen™ feature. To verify whether your TV has this feature, see the table on page 5.*

This connection is necessary for the TV Guide On Screen™ system to work with your cable box to receive program listings and to enable the TV Guide On Screen™ recording features with your VCR.

After you connect your devices to the TV, you will need to connect the G-LINK™ cable from your VCR and Cable box (if applicable) to the **G-LINK™** terminal on the TV.

Note: *TV Guide On Screen™ program data is available through the* ***ANT 1*** *and* ***ANT 2*** *antenna inputs and also through the* ***VIDEO 1*** *inputs if you have a cable box connected to* ***VIDEO 1****. TV Guide On Screen™ program data is not available through any other inputs on this TV (☞ pages 9–16).*

The G-LINK™ connection is necessary to enable the following features of your TV Guide On Screen™ system:

- If you have a Cable box, you must connect the G-LINK™ cable from the Cable box to the G-LINK™ terminal to receive the TV Guide On Screen™ program listings for your Cable service.
- If you have a VCR, you must connect the G-LINK™ cable from the VCR to the **G-LINK™** terminal to use the TV Guide On Screen™ recording features.

To connect to the G-LINK™ terminal:

1 Locate the infrared sensor on the front of your VCR or Cable box. The sensor is marked on some devices.*

2 Align one of the G-LINK™ (IR blaster) cable's wands about 1 inch away from the infrared sensor on the front of the VCR and attach it using double-sided mounting tape. If you have a Cable box, attach the other wand in a similar manner. (See illustration.)

Note: *If you do not have a Cable box, coil the second wand with a rubber band and leave it behind the TV.*

3 Plug the G-LINK™ (IR blaster) cable's plug into the TV's **G-LINK™** terminal.

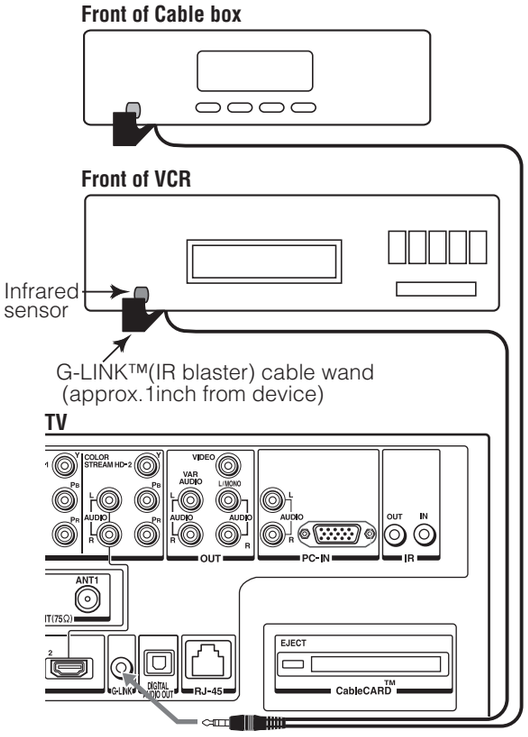

For details on setting up and using the TV Guide On Screen™ system:

See the *TV Guide On Screen™ Interactive Program Guide* (included only with TV models that have the TV Guide On Screen™ system).

***If you cannot locate the device's infrared sensor:**

1. Turn OFF the device.
2. Starting at the lower left corner of the device, place the end of the device's remote control (with the infrared emitter) so it touches the front of the device and press **POWER**. (Do not use the TV's remote control for this step.)
3. If the device turns on, the point at which the remote control touched the device is the location of the sensor.
4. If the device does not turn on, move the remote control slightly to the right and press **POWER** again.
5. Repeat step 4 until you locate the device's infrared sensor.

DLP_Inst.book Page 18 Wednesday, February 22, 2006 6:18 PM

Connecting a personal computer (PC)

This connection allows you to view the image from a PC on the TV screen. When connecting a PC to the TV, use an analog RGB (15-pin) computer cable and a PC audio cable.

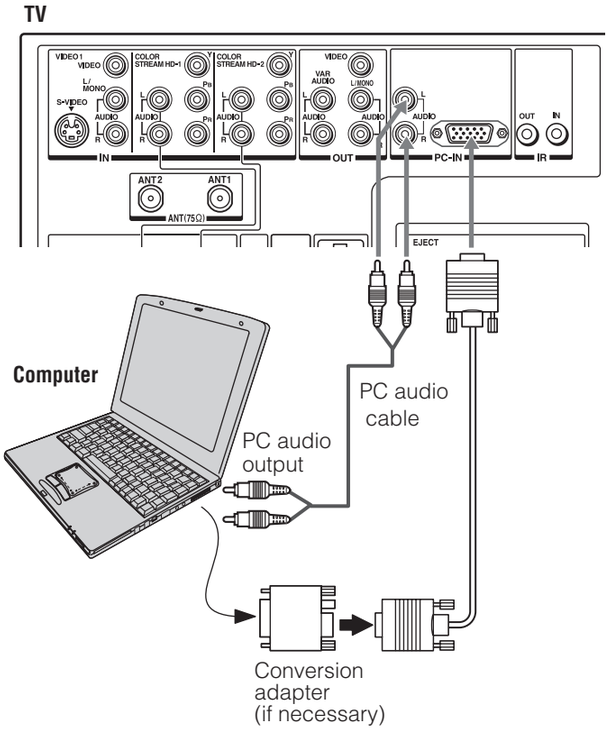

- To use a PC, set the monitor output resolution on the PC before connecting it to the TV. The following signals can be displayed:
  - *VGA: 640 × 480 @ 60Hz*
  - *SVGA: 800 × 600 @ 60Hz*
  - *XGA: 1024 × 768 @ 60Hz*

Other formats or non-standard signals may not be displayed correctly.

- To display the optimum picture, use the PC setting feature (☞ "Using the PC setting feature" in the *Operating Guide*).

Signal names for mini D-sub 15-pin connector

Pin assignment for RGB/PC terminal

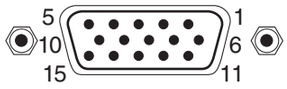

Pin No.	Signal name
1	R
2	G
3	B
4	NC (not connected)
5	NC
6	Ground
7	Ground
8	Ground
9	NC
10	Ground
11	NC
12	NC
13	H-sync
14	V-sync
15	NC

Notes:

- *Some PC models cannot be connected to this TV.*
- *An adapter is not needed for computers with a DOS/V compatible mini D-sub15-pin terminal.*
- *Depending on the DVD's title and the specifications of the PC on which you are playing the DVD-Video, some scenes may be skipped or you may not be able to pause during multi-angle scenes.*
- *Only models that include a **PC IN** (VGA) port are suitable for connecting a PC. Never connect a PC to the **HDMI** port.*

DLP Inst (E/F) Web 213:276

Connecting a home network

The Toshiba Home Interactive Network Connection (THINC™) feature allows you to network the TV with your home PC (personal computer), which will allow access to the TV's file sharing and e-mail scheduling features.

File sharing

You can access JPEG and MP3 files that are stored on your networked home PC and view/play them on the TV.

- Connect your TV to your PC /network according to either Example #1 or Example #2.
- Does NOT require Internet/e-mail service.

E-mail scheduling of recordings and reminders

You can schedule recordings and reminders by sending an e-mail to the TV from any PC. (This connection also allows access to file sharing, as described above.)

- Connect your TV to your home network according to Example #3 on the next page.
- Requires the following:
  - *Home Internet service.*
  - *A dedicated POP3 e-mail address for the TV (different from your personal e-mail address).*
  - *A compatible recording device.*
- Contact your ISP (Internet Service Provider) to obtain and set up Internet/e-mail service.
- See the connection information for recording device connection instructions.
- **See the *Operating Guide* for details on configuring and using e-mail scheduling, file sharing, the JPEG Picture Viewer, and the MP3 Audio Player.**

Notes:

- *The TV's home network feature is compatible only with Microsoft® Windows® 2000 and the Home or Professional version of Microsoft® Windows® XP Service Pack 1 and Service Pack 2. See Operating Guide for details.*
- *The TV's home network connection allows access to e-mail scheduling and file sharing only.* ***You will NOT be able to use the TV to access the Internet.***
- *If you use an Ethernet crossover cable to connect your PC directly to the TV, you will not be able to use the automatic setup and must manually set up the network address.*
- *If you use a hub or switch to connect the TV to your home network, you will not be able to use the automatic setup and must manually set up the network address.*
- *If you use a router with built-in DHCP functionality, use the automatic setup. Manual setup may not work.*

Microsoft and Windows are either registered trademarks or trademarks of Microsoft Corporation in the United States and/or other countries.

Example #1: Connecting the TV to a home network without an Internet connection (for file sharing only)

You will need:

- **standard Ethernet (RJ-45)** cables (the number of cables depends on the number of PCs you connect to your network)
- hub or switch

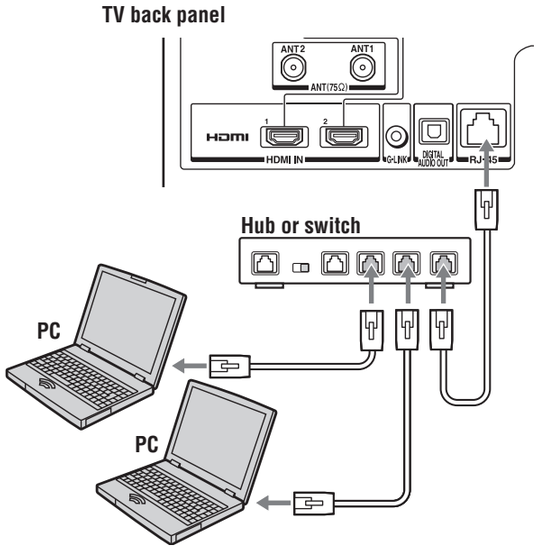

Example #2: Connecting the TV directly to a PC without an Internet connection (for file sharing only)

You will need:

- **Ethernet crossover** cable (i.e., a PC-to-PC direct file transfer cable)

Note: *Do not use standard Ethernet cable with this connection.*

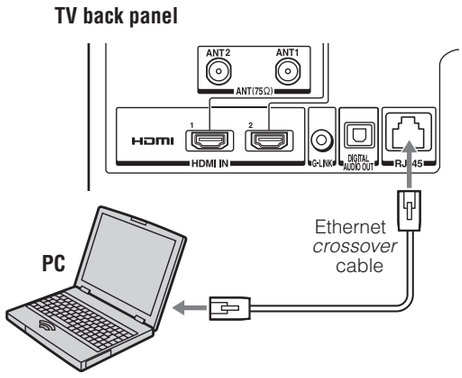

(continued)

Example #3: Connecting the TV to a home network with an Internet connection (for e-mail scheduling and file sharing)

You will need:

- coaxial or telephone cable (depending on your modem)
- **standard Ethernet** (RJ-45) cables
- router/switch[1]
- modem (DSL or cable)[2]

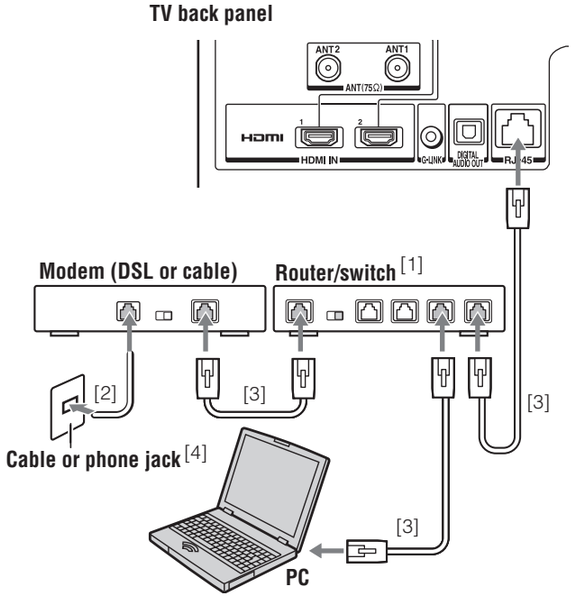

[1] Your router/switch may be part of your DSL or cable modem. Your switch may be separate from your router. For assistance, contact your ISP or an IT professional.
[2] Coaxial or telephone cable (depending on your modem type)
[3] Standard Ethernet (RJ-45) cable
[4] Do NOT connect a phone jack directly to the TV's RJ-45 (Ethernet) port.

Index

A

Antenna cable 7
Audio system connection 16

C

Cable box connection 10
Cable modem..... 20
CableCARD™ connection 8
Cables 7
Camcorder connection..... 15
ColorStream..... 11
Component video 11
Component video cables 7
Connecting devices 8

D

Digital Audio Out 16
Dolby Digital..... 16
DSL modem..... 20
DVD player connection 11
DVI connection..... 13

E

Ethernet (RJ-45) cable..... 7

G

G-LINK™ connection..... 17

H

HDMI cable 7
HDMI™ connection 13
Home network connection 19

I

Installation, care, and service..... 3
IR blaster 14

O

Optical audio cable..... 7

P

PC connection..... 18

R

RJ-45 (THINC™) connection 19
Router..... 20

S

Safety 2
Service 4
S-video cable 7

V

VCR connection 9, 10, 11, 12
Video cables 7

Notes

Notes

TOSHIBA AMERICA CONSUMER PRODUCTS, L.L.C.

Corporate Headquarters: 82 TOTOWA ROAD, WAYNE, NJ 07470, U.S.A.
NATIONAL SERVICE DIVISION: 1420-B TOSHIBA DRIVE, LEBANON, TN 37087, U.S.A.

TOSHIBA OF CANADA LTD.

HEAD OFFICE: 191 McNABB STREET, MARKHAM, ONTARIO, L3R 8H2, CANADA – TEL: (905) 470-5400
SERVICE CENTERS:
TORONTO: 191 McNABB STREET, MARKHAM, ONTARIO L3R 8H2, CANADA – TEL: (905) 470- 5400
MONTREAL: 18050 TRANS CANADA, KIRKLAND, QUEBEC, H9J 4A1, CANADA – TEL: (514) 390-7766
VANCOUVER: 13551 COMMERCE PARKWAY, SUITE 110 , RICHMOND, B.C., V6V 2L1, CANADA – TEL: (604) 303-2500

MANUFACTURED BY
TOSHIBA AMERICA CONSUMER PRODUCTS, L.L.C.

ColorStream is a registered trademark of Toshiba America Consumer Products, L.L.C.
THINC is a trademark of Toshiba America Consumer Products, L.L.C.
Digital Light Processing™, DLP™ and the DLP™ medallion are trademarks of Texas Instruments.

PRINTED IN USA
(06-03)

TOSHIBA