For Your Convenience

Please contact Sony directly if you:

- Have questions on the use of your television after reading your Operating Instruction manual and Quick Setup Guide
- Experience difficulty operating your television

Contact Sony Customer Support at:

http://www.sony.com/tvsupport

or to speak with a support representative:

United States
1-800-222-SONY (7669)

Canada
1-877-899-SONY (7669)

Sony will work to resolve your questions more quickly than your retailer or place of purchase.

Please Do Not Return the Product to the Store

http://www.sony.net/

Printed on 70% or more recycled paper.

Printed in Japan

3271374120

SONY

3-271-374-**12**(1)

SXRD Projection TV

Operating Instructions

KDS-Z60XBR5
KDS-Z70XBR5

BRAVIA

SXRD Silicon X-tal Reflective Display

XBR

© 2007 Sony Corporation

BRAVIA ENGINE PRO

DFI Dark Frame Insertion Motionflow 120Hz

24P TRUE CINEMA

PhotoTV HD

HDTV HIGH-DEFINITION TELEVISION

BRAVIA Theatre Sync

S-FORCE FRONT SURROUND

Internet Video Link READY

Owner's Record

The model and serial numbers are located at the rear of the TV. Record these numbers in the spaces provided below. Refer to them whenever you call upon your Sony dealer regarding this TV.

Model Name

_____

Serial No.

_____

WARNING

To reduce the risk of fire or electric shock, do not expose this TV to rain or moisture.

This symbol is intended to alert the user to the presence of uninsulated "dangerous voltage" within the TV's enclosure that may be of sufficient magnitude to constitute a risk of electric shock to persons.

This symbol is intended to alert the user to the presence of important operating and maintenance (servicing) instructions in the literature accompanying the TV.

The TV shall not be exposed to dripping or splashing and no objects filled with liquids, such as vases, shall be placed on the TV.

CAUTION

To prevent electric shock, do not use this polarized AC plug with an extension cord, receptacle or other outlet unless the blades can be fully inserted to prevent blade exposure.

Declaration of Conformity

Trade Name: SONY
Model: KDS-Z60XBR5/KDS-Z70XBR5
Responsible Party: Sony Electronics Inc.
Address: 16530 Via Esprillo,
San Diego, CA 92127 U.S.A.
Telephone Number: 858-942-2230

This device complies with part 15 of the FCC rules. Operation is subject to the following two conditions: (1) This device may not cause harmful interference, and (2) this device must accept any interference received, including interference that may cause undesired operation.

NOTIFICATION

This equipment has been tested and found to comply with the limits for a Class B digital device, pursuant to Part 15 of the FCC Rules. These limits are designed to provide reasonable protection against harmful interference in a residential installation. This equipment generates, uses and can radiate radio frequency energy and, if not installed and used in accordance with the instructions, may cause harmful interference to radio communications.

However, there is no guarantee that interference will not occur in a particular installation. If this equipment does cause harmful interference to radio or television reception, which can be determined by turning the equipment off and on, the user is encouraged to try to correct the interference by one or more of the following measures:

- ☐ Reorient or relocate the receiving antenna.
- ☐ Increase the separation between the equipment and receiver.
- ☐ Connect the equipment into an outlet on a circuit different from that to which the receiver is connected.
- ☐ Consult the dealer or an experienced radio/TV technician for help.

Pursuant to FCC regulations, you are cautioned that any changes or modifications not expressly approved in this manual could void your authority to operate this equipment.

Safety

- ☐ Operate the TV only on 120 V AC.
- ☐ Use the AC power cord specified by Sony and suitable for the voltage where you use it.
- ☐ The plug is designed, for safety purposes, to fit into the wall outlet only one way. If you are unable to insert the plug fully into the outlet, contact your dealer.
- ☐ If any liquid or solid object should fall inside the cabinet, unplug the TV immediately and have it checked by qualified service personnel before operating it further.
- ☐ If you will not be using the TV for several days, disconnect the power by pulling the plug itself. Never pull on the cord.
- ☐ When disconnecting AC power cord, the power cord should be easily accessible for disconnection.
- ☐ For details concerning safety precautions, see "Important Safety Instructions" on page 6.

Installing

- ☐ The TV should be installed near an easily accessible power outlet.
- ☐ To prevent internal heat buildup, do not block the ventilation openings.
- ☐ Do not install the TV in a hot or humid place, or in a place subject to excessive dust or mechanical vibration.
- ☐ Use the TV at temperatures between 41°F (5°C) and 95°F (35°C).
- ☐ If the TV is transported directly from a cold to a warm location, or if the room temperature changes suddenly, the picture may be blurred or show poor color due to moisture condensation. In this case, please wait a few hours to let the moisture evaporate before turning on the TV.
- ☐ To obtain the best picture, do not expose the screen to direct illumination or direct sunlight. It is recommended to use spot lighting directed down from the ceiling or to cover the windows that face the screen with opaque drapery. It is desirable to install the TV in a room where the floor and walls are not of a reflective material.

CAUTION

Use the following Sony TVs with the following TV-stand.

	Sony TV Model No.
	KDS-Z60XBR5/KDS-Z70XBR5
Sony TV-Stand Model No.	SU-RS52U

Use with other TV-stands may cause instability and possibly result in injury.

To Customers

Sufficient expertise is required for installing the specified TV. Be sure to subcontract the installation to a Sony dealer or licensed contractor and pay adequate attention to safety during the installation.

Note

This television includes a QAM demodulator which should allow you to receive unscrambled digital cable television programming via subscription service to a cable service provider. Availability of digital cable television programming in your area depends on the type of programming and signal provided by your cable service provider.

Trademark Information

Macintosh is a trademark of Apple Inc., registered in the U.S. and other countries.

HDMI, the HDMI logo and High-Definition Multimedia Interface are trademarks or registered trademarks of HDMI Licensing LLC.

Manufactured under license from Dolby Laboratories. "Dolby" and the double-D symbol are trademarks of Dolby Laboratories.

Blu-ray Disc is a trademark.

SXRD, "BRAVIA" and BRAVIA, Motionflow, Photo TV HD, S-Force, BRAVIA Theatre Sync, ■, DMe^{x} and "x.v. Color" are trademarks or registered marks of Sony Corporation.

"XMB" and "xross media bar" are the trademarks of Sony Corporation and Sony Computer Entertainment Inc.

"PLAYSTATION" is a registered trademark and "PS3" is a trademark of Sony Computer Entertainment Inc.

Adobe is a registered trademark or a trademark of Adobe Systems Incorporated in United States and/or other countries.

Contents

Important Safety Instructions **6**

Welcome to the World of BRAVIA™

The Four Steps to Full HD Experience: Set, Sound, Source, and Setup **8**

Picture Quality and Aspect Ratio **8**

TV Home Menu: XMB™ (XrossMediaBar) **9**

Getting Started

1. Installing the TV **10**
- Carrying Your TV 10
- Preventing the TV from Toppling Over 10
- When Installing Your TV against a Wall 11
- Recommended Viewing Area 12
- Screen 12
- Projection Lamp 12

2. Locating Inputs and Outputs **13**
- Left Side 13
- Left Side Rear 14

3. Connecting the TV **17**
- Cable System or VHF/UHF Antenna System 17
- Cable System and VHF/UHF Antenna System 17
- HD Cable Box/HD Satellite Box 17
- PC 19
- Other Equipment 20
- Using HDMI Control for BRAVIA Theatre Sync™ 21
- Bundling the Connecting Cables 21

4. Setting Up the Channel List – Initial Setup **22**

Using the TV Features

Remote Control and TV Controls/ Indicators **23**
- Inserting Batteries into the Remote Control 23
- Remote Control and TV Controls 23
- Indicators 28

Programming the Remote Control **29**
- Operating Sony Brand Video Equipment 29
- Programming Non-Sony Video Equipment 29

Using Other Equipment with Your Remote Control **31**

Using P&P and PIP Features **34**
- To Display the Sub Window 34
- To Change Inputs or Channels in the Window 34
- To Change the Window Size of P&P 34
- To Exit from P&P and PIP 34

Using the Menus

Adjusting TV Settings **35**

Watching TV **35**

Accessing the Equipment Connected to Your TV **35**

Navigating through TV Home Menu on XMB™ **36**

Quick Setup Guide (separate volume)
Provides a variety of optional equipment connection diagrams.

Customer Support
http://www.sony.com/tvsupport
On-line Registration
United States
http://productregistration.sony.com
Canada
http://www.SonyStyle.ca/registration

(Continued)

TV Setting Description **37**
Product Support 37
Clock/Timers Settings 37
Picture Settings 37
Sound Settings 39
Screen Settings 40
Video Options Settings 42
Audio Options Settings 43
Channel Settings 44
Closed Captions (CC) Settings 45
Parental Lock Settings 45
External Inputs Settings 47
HDMI Settings 48
General Settings 48
Initial Setup 48

Other Information

Replacing the Lamp **49**
How to Replace the Lamp 49

Troubleshooting **52**

Specifications **56**

Index **57**

Important Safety Instructions

1) Read these instructions.
2) Keep these instructions.
3) Heed all warnings.
4) Follow all instructions.
5) Do not use this apparatus near water.

6) Clean only with dry cloth.

7) Do not block any ventilation openings. Install in accordance with the manufacturer's instructions.

8) Do not install near any heat sources such as radiators, heat registers, stoves, or other apparatus (including amplifiers) that produce heat.

9) Do not defeat the safety purpose of the polarized or grounding-type plug. A polarized plug has two blades with one wider than the other. A grounding type plug has two blades and a third grounding prong. The wide blade or the third prong are provided for your safety. If the provided plug does not fit into your outlet, consult an electrician for replacement of the obsolete outlet.

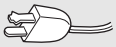

10) Protect the power cord from being walked on or pinched particularly at plugs, convenience receptacles, and the point where they exit from the apparatus.

11) Only use attachments/accessories specified by the manufacturer.

12) Use only with the cart, stand, tripod, bracket, or table specified by the manufacturer, or sold with the apparatus. When a cart is used, use caution when moving the cart/ apparatus combination to avoid injury from tip-over.

13) Unplug this apparatus during lightning storms or when unused for long periods of time.

14) Refer all servicing to qualified service personnel. Servicing is required when the apparatus has been damaged in any way, such as power-supply cord or plug is damaged, liquid has been spilled or objects have fallen into the apparatus, the apparatus has been exposed to rain or moisture, does not operate normally, or has been dropped.

☐ Be sure to observe the TV's "For Safety" section on page 7.

Antennas

Outdoor Antenna Grounding

If an outdoor antenna is installed, follow the precautions below. An outdoor antenna system should not be located in the vicinity of overhead power lines or other electric light or power circuits, or where it can come in contact with such power lines or circuits.

WHEN INSTALLING AN OUTDOOR ANTENNA SYSTEM, EXTREME CARE SHOULD BE TAKEN TO KEEP FROM CONTACTING SUCH POWER LINES OR CIRCUITS AS CONTACT WITH THEM IS ALMOST INVARIABLY FATAL.

Be sure the antenna system is grounded so as to provide some protection against voltage surges and built-up static charges.

Section 810 of the National Electrical Code (NEC) in USA and Section 54 of the Canadian Electrical Code in Canada provides information with respect to proper grounding of the mast and supporting structure, grounding of the lead-in wire to an antenna discharge unit, size of grounding conductors, location of antenna discharge unit, connection to grounding electrodes, and requirements for the grounding electrode.

Antenna Grounding According to the NEC

Refer to section 54-300 of Canadian Electrical Code for Antenna Grounding.

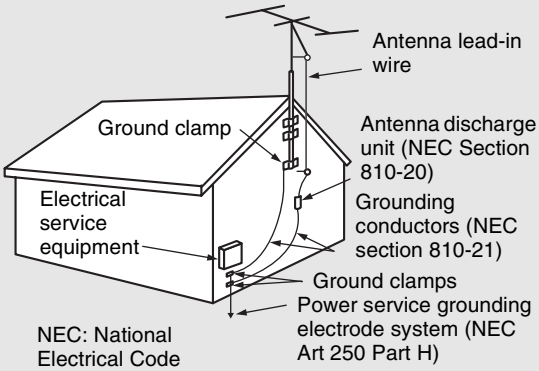

Electric shock

Do not touch the AC power cord or the TV with a wet hand. If you plug/unplug the AC power cord from the TV with a wet hand, it may cause electric shock.

Cleaning

- ☐ Clean the rear cover area of the TV regularly. Dust in the rear cover area may cause a problem with the cooling system of the TV set.
- ☐ Clean the cabinet of the TV with a dry soft cloth. To remove dust from the screen, wipe it gently with a soft cloth. Stubborn stains may be removed with a cloth slightly dampened with solution of mild soap and warm water. Never use strong solvents such as thinner or benzine for cleaning. If the picture becomes dark after using the TV for a long period of time, it may be necessary to clean the inside of the TV. Consult qualified service personnel.

- ☐ Unplug the AC power cord when cleaning this unit. Cleaning this unit with a plugged AC power cord may result in electric shock.

On Contamination on the Screen Surface

The screen surface has a special coating to reduce reflections. To prevent screen damage, clean the screen as follows:

- ☐ Clean the screen with a soft cloth.
- ☐ To remove hard contamination, use a cloth moistened with a solution of mild detergent and water. Do not spray cleaning solution directly onto the TV. It should only be sprayed to moisten the cleaning cloth.
- ☐ Do not use any type of abrasive pad, alkaline cleaner, acid cleaner, scouring powder, chemical cloth, or solvent such as alcohol, benzene or thinner, as these may scratch the screen's coating.

Service

Damage Requiring Service

Do not attempt to service the set by yourself since opening the cabinet may expose you to dangerous voltage or other hazards.

Unplug the set from the wall outlet and refer servicing to qualified service personnel.

Replacement Parts

When replacement parts are required, be sure the service technician certifies in writing that he has used replacement parts specified by the manufacturer that have the same characteristics as the original parts.

Unauthorized substitutions may result in fire, electric shock or other hazards.

See "Replacing the Lamp" on page 49.

For Safety

Be Careful When Moving the TV

When you place the TV in position, be careful not to drop it on your foot or fingers.

Watch your footing while installing the TV.

Carry the TV in the Specified Manner

If you carry the TV in a manner other than the specified manner and without the specified number of persons, it may drop and a serious injury may be caused. Be sure to follow the instructions mentioned below.

- ☐ Carry the TV with the specified number of persons (see page 10).
- ☐ Hold the TV tightly when carrying it.
- ☐ Before carrying the TV, disconnect any accessories or cables.

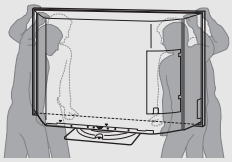

For Safe Operations

Always switch off by pressing POWER button on the remote or the TV first to ensure proper lamp cooling process.

Caution

Do not use the TV at altitudes higher than 3,000 m, as doing so might cause malfunction.

About the TV

Although the TV is made with high-precision technology, black dots may appear or bright points of light (red, blue, or green) may appear constantly on the screen. This is a structural property of the panel and is not a defect.

Installation

- ☐ If direct sunlight or other strong illumination shines on the screen, part of the screen may appear white due to reflections from behind the screen. This is a structural property of the TV.
  Do not expose the screen to direct illumination or direct sunlight.
- ☐ The picture quality may be affected by your viewing position. For the best picture quality, install your TV according to "Recommended Viewing Area" on page 12.
- ☐ When installing your TV against a wall, keep it at least 4 inches (10 cm) away from the wall.

Projection Lamp

- ☐ Your TV uses a projection lamp as its light source. It is time to replace the lamp with a new one (not supplied) when:
  - the message, "Projection lamp is nearing end of life. Please replace the lamp." appears on the screen,
  - the lamp replacement indicator on the front panel blinks in red,
  - screen images become dark,
  - no image appears on the display after prolonged use.
- ☐ In rare instances, the bulb may pop inside the lamp unit, but the lamp unit is designed to contain all of broken glass pieces inside the lamp unit. (See "Replacing the Lamp" on page 49.)
- ☐ When the lamp eventually burns out, you may hear a noticeable pop sound. This is normal and is inherent in this type of lamp.

Cooling Fans

This TV uses cooling fans. You may hear the noise of fans running, depending on the placement of your TV. The noise may be more noticeable during the night or when the background noise level is low.

Disposal of Used Batteries

To preserve our environment, dispose of used batteries according to your local laws or regulations.

For Customers in the United States

Lamp in this product contains mercury. Disposal of these materials may be regulated due to environmental considerations. For disposal or recycling information, please contact your local authorities or the Electronic Industries Alliance (http://www.eiae.org).

Welcome to the World of BRAVIA™

Thank you for purchasing this Sony BRAVIA™ high-definition television. The quality of the image you see on your BRAVIA TV is only as good as the quality of the signal it receives. To experience the full detail of your new BRAVIA TV, you need access to HD programming. Your BRAVIA TV can receive and display HD programming from:

- Over-the-air broadcasting via HD-quality antenna
- HD cable subscription
- HD satellite subscription
- Blu-ray Disc™ Player or other external equipment

Contact your cable or satellite provider for information on upgrading to HD programming.

To learn more about HDTV, visit: http://www.sony.com/HDTV

The Four Steps to Full HD Experience: Set, Sound, Source, and Setup

Along with your BRAVIA TV **set**, a complete HD system requires an HD **sound** system, a **source** of HD programming and proper **setup** connections. This manual explains basic setup connections (see page 17). The Quick Setup Guide, enclosed separately, illustrates how to connect other optional equipment.

Picture Quality and Aspect Ratio

You can enjoy crisp, clear images, smooth movement and high-impact visuals from 1080 HD signals. When you compare a high-definition signal to a standard analog signal, you will notice a big difference. The 1080 HD signals provide more than twice the vertical resolution of the standard TV signal.

High-definition and standard-definition signals are transmitted with different aspect ratios (the width-to-height ratio of the image). HDTV uses a wider screen than conventional standard-definition TV.

16:9 (high-definition) source

Most HDTV signals use a wide screen aspect ratio of 16:9. The 16:9 fills your BRAVIA screen and maintains a crisp, clear, vivid picture.

4:3 (standard-definition) source

Most standard-definition signals use a boxy 4:3 aspect ratio. When a 4:3 image is displayed on an HDTV, you will see black bars on the sides. The picture quality may not be as sharp as with HD sources.

✍

- You can use the **Wide Mode** function of the TV to adjust the 4:3 image to fit the entire screen (see pages 26, 40 and 42).

TV Home Menu: XMB™ (XrossMediaBar)

The **XMB™** is a menu of BRAVIA features and input sources displayed on the TV screen. The **XMB™** is an easy way to select programming and adjust settings on your BRAVIA TV. Press the **HOME** button on your remote control to access the **XMB™**.

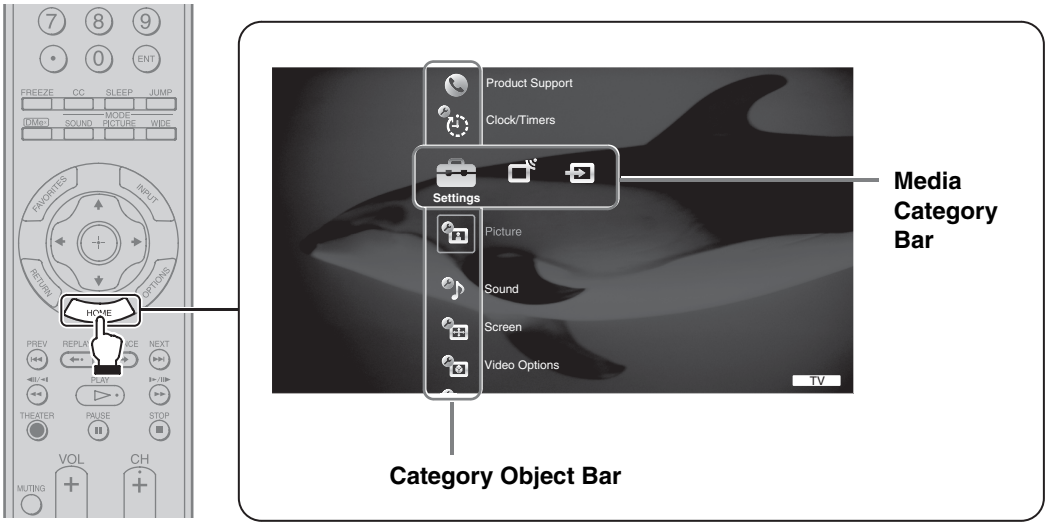

From the horizontal Media Category Bar you can control:

- **Settings**: timer, picture, sound, screen and other options (see page 37 for customization options).
- **TV** Channels: available channels are displayed on the vertical Category Object Bar.
- **External Inputs**: cable, satellite, VCR, DVD players or other inputs can also be selected from the Category Object Bar for the **External Inputs**.

1. Installing the TV

Carrying Your TV

Carrying the TV requires four people.
Do not carry the TV by grasping only the front panel. Avoid holding the bottom middle part of the screen. Doing so may damage the panel.

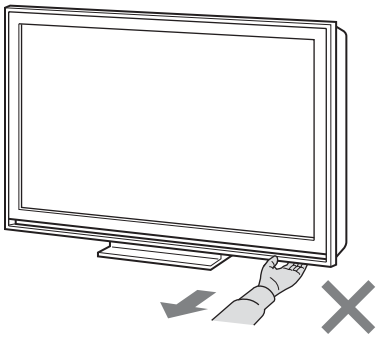

When moving the TV, hold it as shown in the illustration below.
When lifting the rear and side, place the hands in the holes on the lower portion of the cabinet.
Two persons should lift and support from the front, while the other two lift the sides.

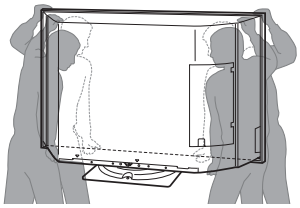

If you have connected cables and cords, be sure to unplug them before moving the TV.
To ensure the safety of children and the TV, keep children away from the TV during installation.
Climbing on or pushing the TV or its stand may cause it to fall and may damage the TV.

Preventing the TV from Toppling Over

As a protective measure, secure the TV as follows.

Using the TV stand SU-RS52U

Sony strongly recommends using the TV stand SU-RS52U.

To secure the TV, use the two shafts and two screws that were securing the Table-Top Stand. Fasten the two shafts first, and then fasten the two screws.

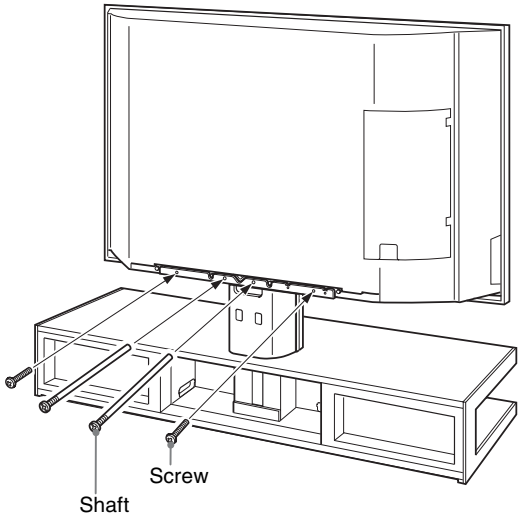

- For more information, refer to the instruction guide provided by the TV stand SU-RS52U.

When using other TV stands

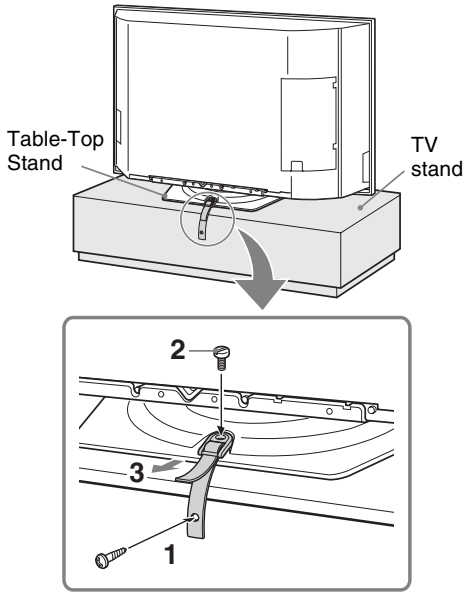

1 Screw the support belt (supplied) to the TV stand with a wood screw (supplied).

2 Attach the support belt to the Table-Top Stand with the securing screw (supplied) using a coin, etc.

3 Adjust the length by pulling the support belt toward you while holding the Table-Top Stand.

- Be sure to take measures to prevent the TV from toppling over and causing injury.
- The supplied wood screw may not be used depending on the type of TV stand. In this case, or when the securing strength is not enough, use commercial screws 1/8 to 3/16 inch (3 to 4 mm) diameter to fit to the TV stand. Consult your dealer about the types of screw(s).

When Installing Your TV against a Wall

Keep your TV at least 4 inches (10 cm) away from the wall to provide proper ventilation. Blocking the ventilation opening of the cooling fan may damage the TV.

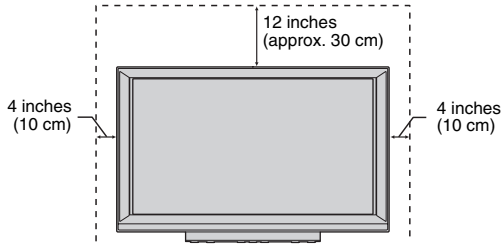

Never install the TV as follows:

Air circulation is blocked.

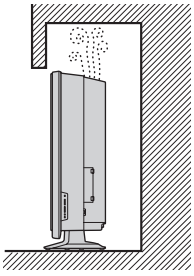

Air blown into cooling fan.

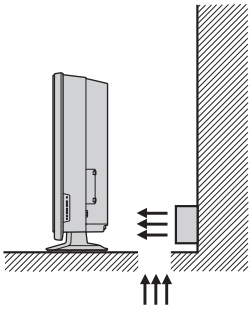

- Do not install the TV near any ventilation, as it may affect the normal TV operating temperature.
- Be sure that the ventilation opening on the side of the TV is not blocked by curtains or other materials.
- Dirt may accumulate near the ventilation when the TV is placed against the wall depending on its material.

Recommended Viewing Area

Your viewing position may affect the picture quality.
For the best picture quality, install your TV within the areas shown below.

Model	Viewing distance
KDS-Z60XBR5	min. 7.0 ft. (approx. 2.2 m)
KDS-Z70XBR5	min. 8.0 ft. (approx. 2.4 - 2.5 m)

Horizontal Viewing Area

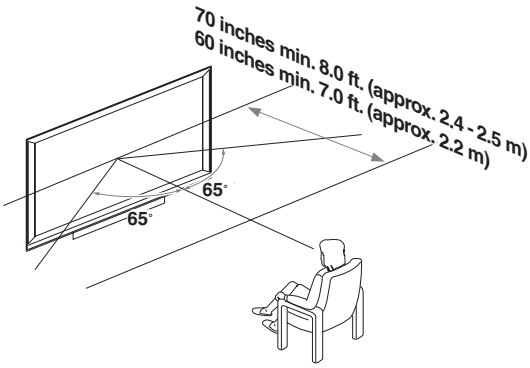

Vertical Viewing Area

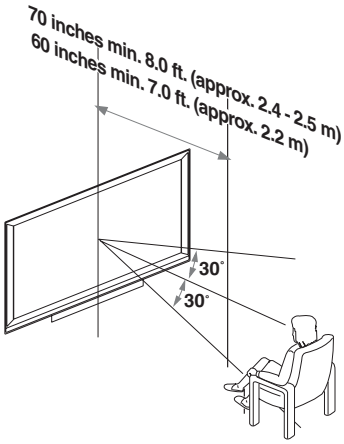

Screen

To minimize reflection, the screen surface has a special coating.
Inappropriate cleaning methods could damage the screen surface. Special care is required.

Cleaning the Screen Surface

Dust and dirt on the screen can affect the picture quality. To dust off the screen use a soft cloth. Be sure to follow the cleaning instruction on page 7 for stubborn stains and dirt.

Temporary Image Retention

When high contrast non-moving images such as station logos and channel numbers are displayed for a long period of time, there may be some image retention on the screen. This is only a temporary condition. Turning off the power for a while or letting the TV run on another channel will eliminate the image retention.

Projection Lamp

Your TV uses a projection lamp as its light source. As with any lamp, it has a lifespan and needs to be replaced when the Lamp Indicator flashes or the screen becomes darker. Your TV also has a function to display a message, “Projection lamp is nearing end of life. Please replace the lamp.” to let you know that the lamp has reached its expected lifespan. Note the following:

- ☐ After turning on your TV, it may take a while (one minute or less) before the picture appears.
- ☐ When the projection lamp wears out, the screen goes dark. Replace the lamp with a new Sony XL-5200 replacement lamp (not supplied).
- ☐ After lamp is replaced, please set the **Lamp Replacement** option in the **General** settings (see page 48).

“How to Replace the Lamp”, see page 49.

- The light emitted from the lamp is quite bright when your TV is in use. To avoid eye discomfort or injury, do not look into the light housing when the power is on.

2. Locating Inputs and Outputs

Left Side

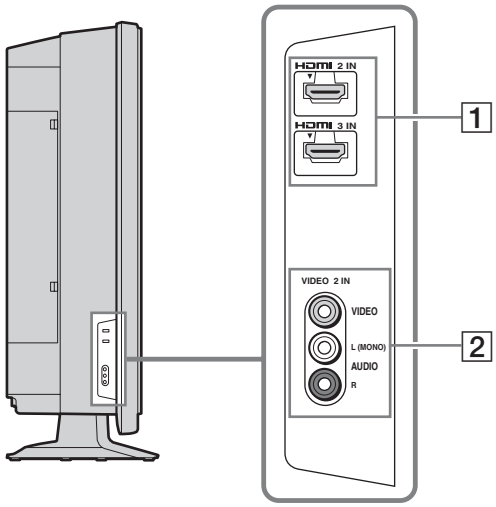

Item	Description
1 **HDMI IN 2/3 HDMI**	HDMI (High-Definition Multimedia Interface) provides an uncompressed, all-digital audio/video interface between this TV and any HDMI-equipped audio/video equipment, such as a set-top box, DVD player, Blu-ray Disc Player, A/V receiver as well as PC. HDMI supports enhanced, or high-definition video, plus digital audio. ✍ • HDMI connection is necessary to view 480i, 480p, 720p, 1080i, 1080p and 1080/24p formats. Note that this TV displays all video input signals in a resolution of 1,920 dots × 1,080 lines. • Be sure to use only an HDMI cable that bears the HDMI logo. • When HDMI control compatible equipment is connected, communication with the connected equipment is supported. Refer to page 48 to set up this communication. • When connecting a HDMI control compatible audio system with HDMI jack, be sure to also connect to the OPTICAL OUT jack.
2 **VIDEO 2 IN VIDEO/ L(MONO)-AUDIO-R**	Connects to the composite video and audio output jacks on your A/V equipment such as a VCR or other video equipment.

Left Side Rear

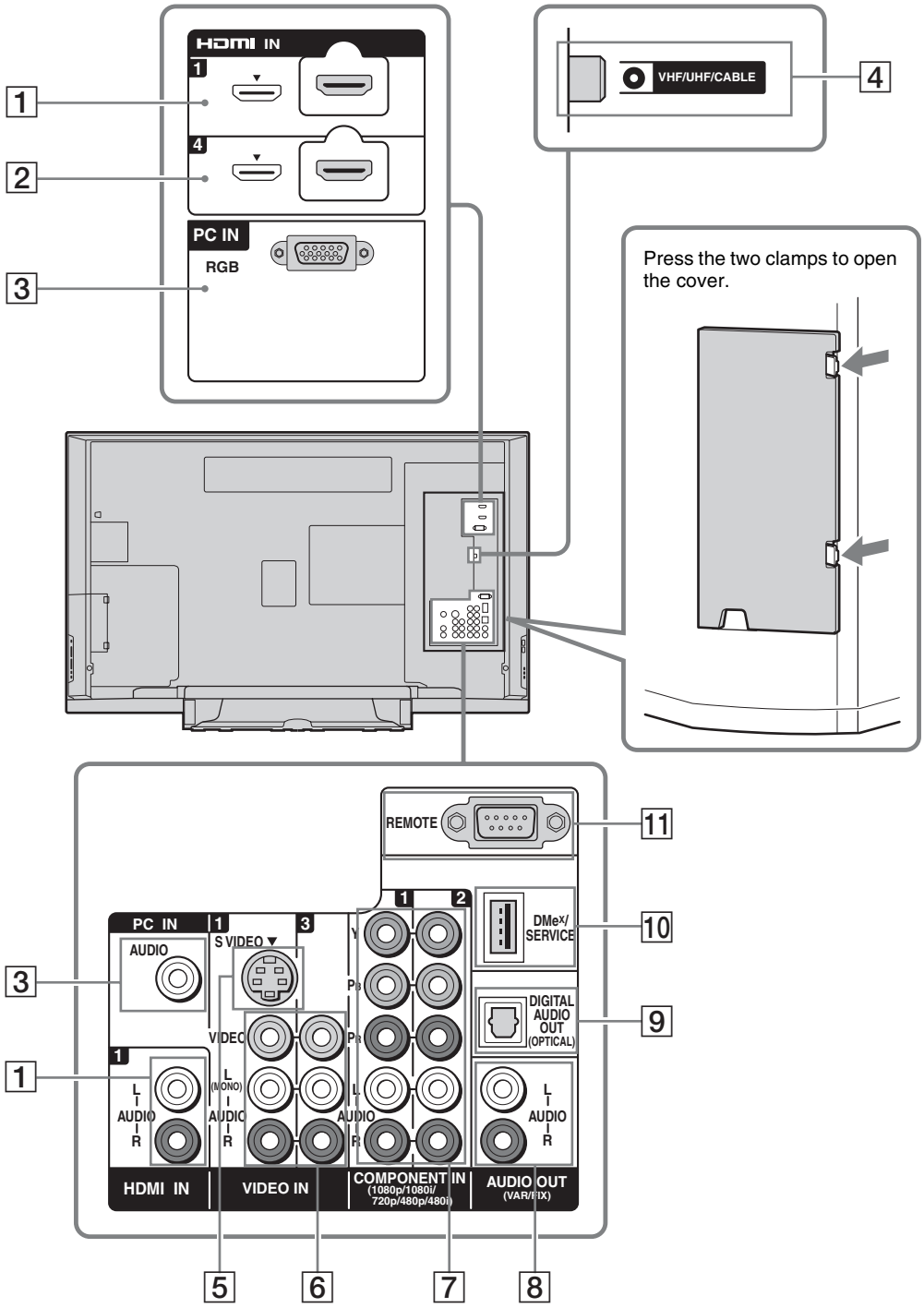

Item	Description
1 **HDMI IN 1 HDMI/ R-AUDIO-L**	HDMI (High-Definition Multimedia Interface) provides an uncompressed, all-digital audio/video interface between this TV and any HDMI-equipped audio/video equipment, such as a set-top box, DVD player, Blu-ray Disc Player, A/V receiver as well as PC. HDMI supports enhanced, or high-definition video, plus digital audio.
2 **HDMI IN 4 HDMI**	If the equipment has a DVI jack and not an HDMI jack, connect the DVI jack to the HDMI IN 1 (with DVI-to-HDMI cable or adapter) jack, and connect the audio jack to the AUDIO IN (L/R) jacks of HDMI IN 1. 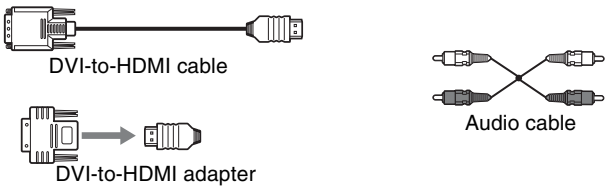 • HDMI connection is necessary to view 480i, 480p, 720p, 1080i, 1080p and 1080/24p formats. Note that this TV displays all video input signals in a resolution of 1,920 dots × 1,080 lines. • Be sure to use only an HDMI cable that bears the HDMI logo. • When HDMI control compatible equipment is connected, communication with the connected equipment is supported. Refer to page 48 to set up this communication. • When connecting an HDMI control compatible audio system with HDMI jack, be sure to also connect to the OPTICAL OUT jack.
3 **PC IN (RGB/AUDIO)**	Connects to a personal computer's video output connector using an HD15-HD15 cable with ferrite core (analog RGB, not supplied). Can also be connected to other analog RGB equipment. See "PC Input Signal Reference Chart" on page 19 for the signals that can be displayed. • For some Apple Macintosh computers, it may be necessary to use an adapter (not supplied). If this is the case, connect the adapter to the computer before connecting the HD15-HD15 cable with ferrite core. • If the picture is noisy, flickering or not clear, adjust **Phase** and **Pitch** of **Screen** settings on page 41.
4 **VHF/UHF/CABLE**	RF input that connects to your Cable or VHF/UHF antenna.
5 **VIDEO IN 1 S VIDEO**	Connects to the S VIDEO output jack of your VCR or other video equipment that has S VIDEO. The S VIDEO provides better picture quality than composite video (6) connection. If both composite video and S VIDEO are connected, S VIDEO signal has priority.
6 **VIDEO IN 1/3 VIDEO/ L(MONO)- AUDIO-R**	Connects to the composite video and audio output jacks on your A/V equipment such as a VCR or other video equipment.
7 **COMPONENT IN 1/2 (1080p/1080i/ 720p/480p/480i)/ L-AUDIO-R**	Connects to your equipment's component video (YPBPR) output jack and audio (L/R) jacks. Component video provides better picture quality than the S VIDEO (5) or the composite video (6) connection. • Component video (YPBPR) connection is necessary to view 480i, 480p, 720p, 1080i and 1080p formats. Note that this TV displays all video input signals in a resolution of 1,920 dots × 1,080 lines.
8 **AUDIO OUT (VAR/FIX)**	Connects to the left and right audio input jacks of your analog audio equipment. You can use these outputs to listen to your TV's audio through your stereo system.

(Continued)

Item	Description
9 **DIGITAL AUDIO OUT (OPTICAL)**	Connects to the optical audio input of your digital audio equipment that is PCM/Dolby Digital compatible. Dolby Digital Audio signal from the HDMI input will be output as PCM. Dolby Digital Audio signal from digital channels will be output as it is.
10 **DMe^{x}/ SERVICE**	This USB port is for service only unless you are connecting the optional BRAVIA external module (DMe^{x}).
11 **REMOTE**	This jack is for receiving the external control signal.

3. Connecting the TV

Cable System or VHF/UHF Antenna System

You can enjoy high-definition and standard-definition digital programming (if available in your area) along with standard-definition analog programming.

- This TV is capable of receiving unscrambled digital programming for both cable (QAM and 8VSB) and external VHF/UHF antenna (ATSC).
- It is strongly recommended that you connect the antenna/cable input using a 75-ohm coaxial cable to receive optimum picture quality. A 300-ohm twin lead cable can be easily affected by radio frequency interference, resulting in signal degradation.

Cable or VHF/UHF (or VHF only)

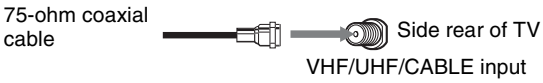

Cable System and VHF/UHF Antenna System

Use an optional A-B RF switch (not supplied) to switch between the cable and over-the-air antenna programming, as indicated below.

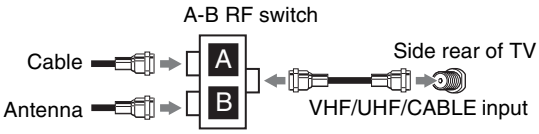

- Be sure to set the **Cable** setting to **On** or **Off** in the **Channel** settings for the type of input signal you choose (see page 44).

HD Cable Box/HD Satellite Box

You can also enjoy high-definition programming by subscribing to a high-definition cable service or a high-definition satellite service. For the best possible picture, make sure you connect this equipment to your TV via the HDMI or component video (with audio) input on the back of your TV.

Shown with HDMI Connection

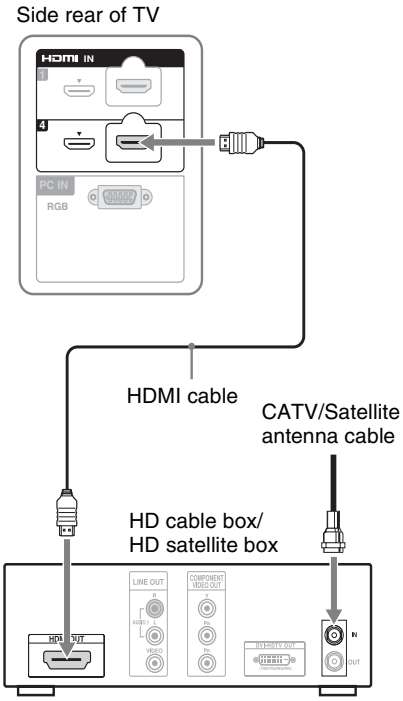

(Continued)

Shown with DVI Connection

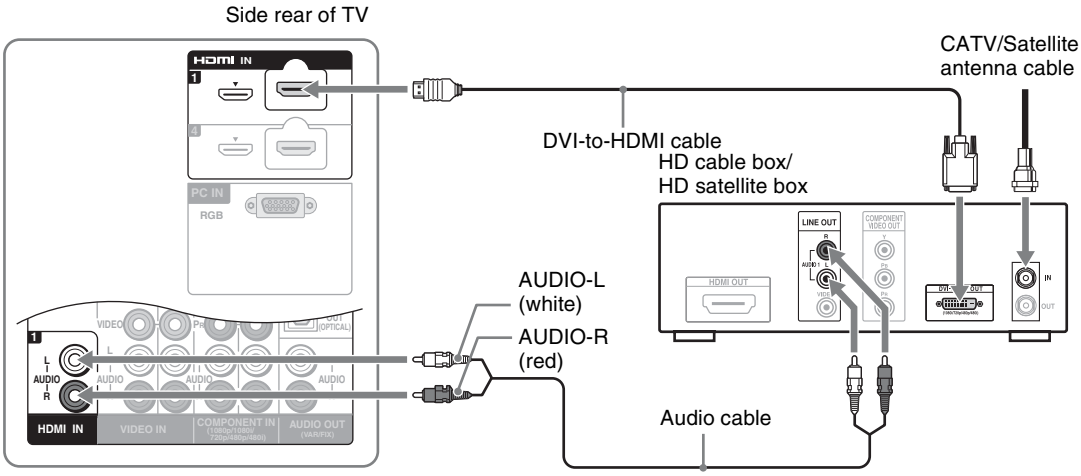

- If the equipment has a DVI jack and not an HDMI jack, connect the DVI jack to the HDMI IN 1 (with DVI-to-HDMI cable or adapter) jack and connect the audio jack to the AUDIO IN (L/R) jacks of HDMI IN 1. For details, see page 15.

Shown with Component Connection

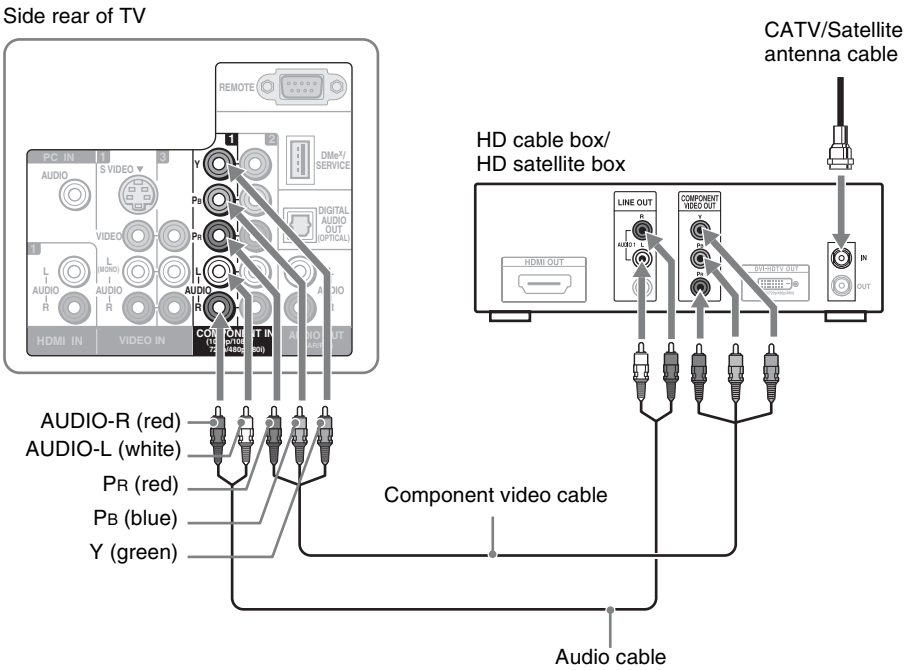

PC

Use the TV as a monitor for your PC.
Shown below with the HD15 to HD15 connection. This TV can also be connected to a PC with DVI or HDMI output. (Refer to the separate Quick Setup Guide.)

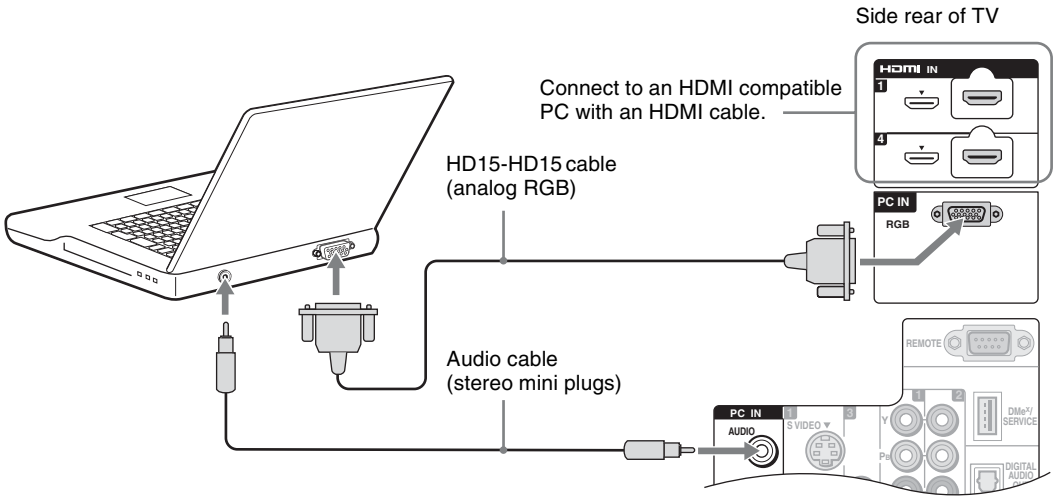

- Connect the PC IN jack to the PC using an HD15-HD15 cable with ferrite core (analog RGB, not supplied) and audio cable (page 15).

PC Input Signal Reference Chart

After connecting the PC to the TV, set the output signal from the PC according to the chart below.

Resolution				Horizontal frequency (kHz)	Vertical frequency (Hz)	Standard
Signals	Horizontal (Pixel)	×	Vertical (Line)			
VGA	**640**	×	**480**	**31.5**	**60**	**VGA**
	640	×	480	37.5	75	VESA
	720	×	400	31.5	70	VGA-T
SVGA	**800**	×	**600**	**37.9**	**60**	**VESA Guidelines**
	800	×	600	46.9	75	VESA
XGA	**1024**	×	**768**	**48.4**	**60**	**VESA Guidelines**
	1024	×	768	56.5	70	VESA
	1024	×	768	60.0	75	VESA
WXGA	**1280**	×	**768**	**47.4**	**60**	**VESA**
	1280	×	**768**	**47.8**	**60**	**VESA**
	1280	×	768	60.3	75	
	1360	×	**768**	**47.7**	**60**	**VESA**
SXGA	**1280**	×	**1024**	**64.0**	**60**	**VESA**
	1280	×	1024	80.0	75	VESA
HDTV	1920	×	1080	67.5	60	

- This TV's PC input does not support Sync on Green or Composite Sync.
- This TV's PC VGA input does not support interlaced signals.
- When in PC input, the edge of the picture may be cropped, or a black frame may appear around the picture. See page 26 to adjust the screen.
- For the best picture quality, it is recommended to use the signals (boldfaced) in the above chart with a 60 Hz vertical frequency from a personal computer. In plug and play, signals with a 60 Hz vertical frequency will be detected automatically. (PC reboot may be necessary.)

Other Equipment

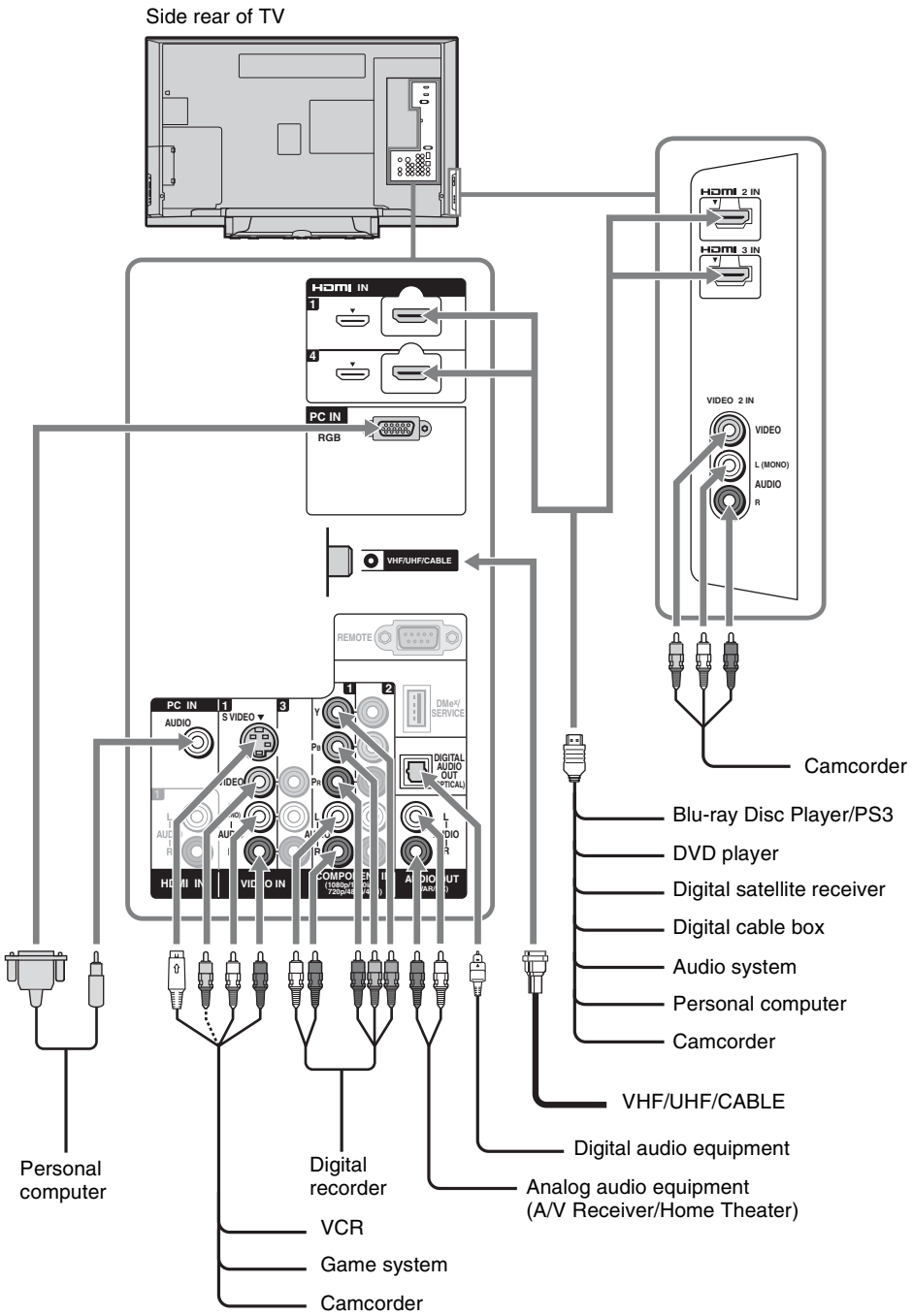

• Refer to the Quick Setup Guide (supplied) when connecting other equipment to your TV.

Using HDMI Control for BRAVIA Theatre Sync™

This TV is equipped with BRAVIA Theatre Sync. The **HDMI Control** function enables BRAVIA Theatre Sync to allow communication between Sony TV's and Sony equipment. Only Sony equipment with HDMI Control capability is supported.

To Connect HDMI Control Equipment

Use an HDMI cable that bears the HDMI logo for connection. See page 20 or see the HDMI connection shown in the Quick Setup Guide provided with the TV documentation.

Setting the HDMI Control

In order for the HDMI Control function to operate, the TV and other Sony HDMI Control equipment must be setup. See page 48 on how to turn the **HDMI Control On**. For other equipment, refer to the operating instructions for that equipment.

HDMI Control Available with Your TV

Once the supported equipment is connected, the following operations are available:

- Turn off the equipment automatically when you turn off the TV.
- When the connected equipment is turned on by One-Touch-Play, the TV will automatically turn on and select the respective HDMI input.
- Automatically turn on equipment listed under the **External Inputs** on the **XMB**™ when selected, see pages 9 and 35.

When a Sony A/V receiver with BRAVIA Theatre Sync is connected, the following additional operations are possible:

- Turning on the A/V receiver when the TV is turned on.
- Automatically switching to the audio output of the A/V receiver's attached speakers.
- Adjusting the volume and muting of the A/V receiver with the TV's remote control.

✍

• The A/V receiver cannot be selected from the **XMB**™.

Bundling the Connecting Cables

You can bundle the connecting cables as illustrated below.

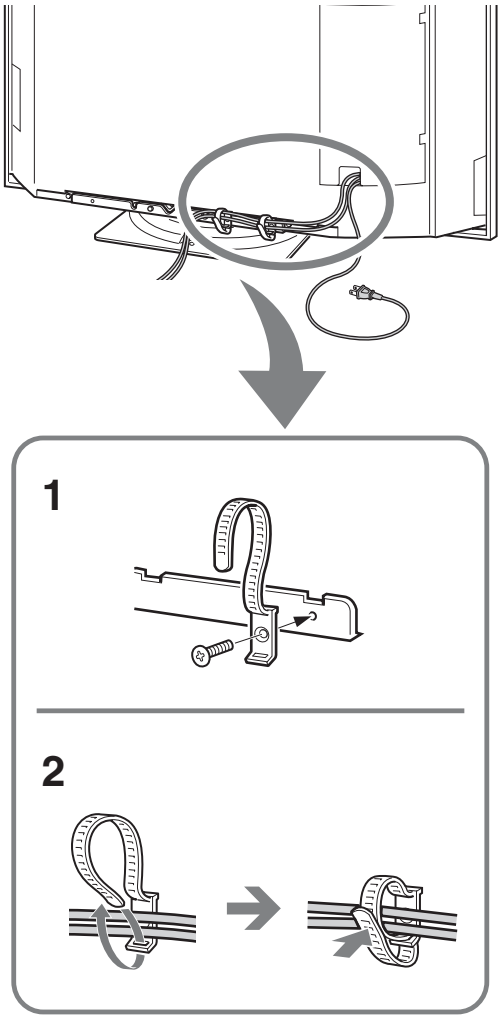

4. Setting Up the Channel List – Initial Setup

The **Initial Setup** screen appears when you turn on the TV for the first time.

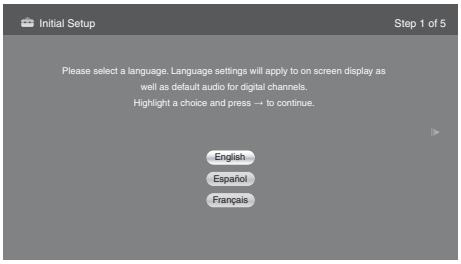

After you finish connecting the TV, you can run **Initial Setup** to create a list of available analog and digital channels if you have connected an antenna or cable directly to the TV's VHF/UHF/CABLE input.
You will be prompted to select the language of your choice to be used for all the on-screen settings.
Use the remote control to navigate through the **Initial Setup**:

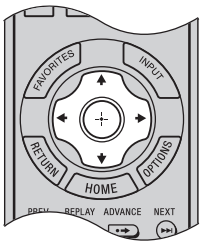

↑/↓ button:
Allows you to highlight options where applicable.

⊕ button:
Allows you to select the highlighted option and advance to the next screen.

← button:
Allows you to move back to the previous screen.

→ button:
Allows you to move to the next screen.

Follow the help text provided on the screen to run **Auto Program** with the connected signal source or select **Skip** to skip the **Auto Program** if you are receiving channels from a cable box or satellite receiver and the VHF/UHF/CABLE input is not connected. The **Auto Program** will scan for available channels. When the **Auto Program** is completed, the TV will display how many analog and digital channels are found.

✍

- If you accidentally turn off the TV during the **Initial Setup** process, the **Initial Setup** will restart from the beginning when the TV is turned back on.
- The **Auto Program** may be canceled while the channels are being scanned. Press **RETURN** first then press either ←/→ on the remote control, highlight "Yes" to cancel or "No" to resume **Auto Program**.

To Run Initial Setup Again or Auto Program at a Later Time

Select the **Initial Setup** feature from the **XMB**™ or refer to the **Initial Setup** described on page 48. To run **Auto Program**, see page 44.

To Add Digital Channels

Use the **Add Digital Channels** feature as described on page 44. (Useful for antenna installations.)

To Display the Picture in Your Preferred Aspect Ratio

Select the proper **Wide Mode** as described on pages 40 and 42.
You may want to set up convenient features such as **Favorites** (see page 24), **Show/Hide Channels** (page 44), **Edit Channel Labels** (page 45) when **Auto Program** is completed.

Using the TV Features

Remote Control and TV Controls/Indicators

Inserting Batteries into the Remote Control

Insert two size AA batteries (supplied) by matching ⊕ and ⊖ on the batteries to the diagram inside the battery compartment of the remote control.

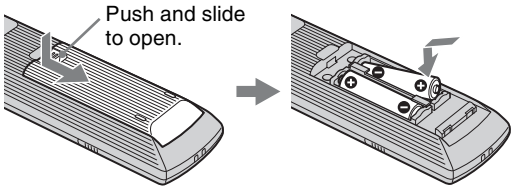

Remote Control and TV Controls

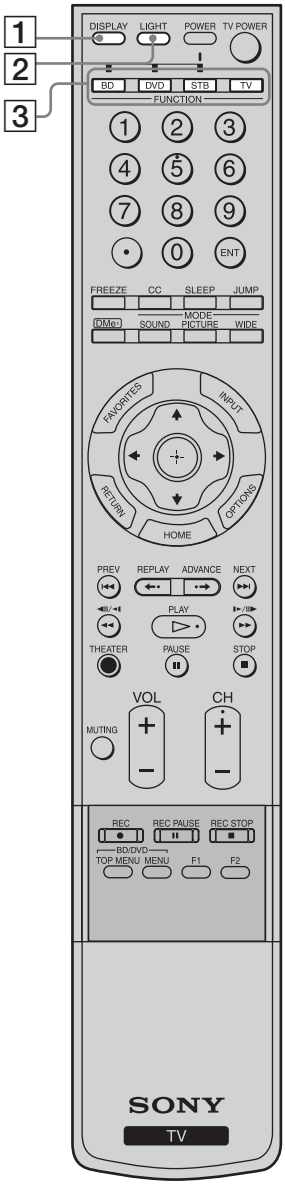

Buttons located at the right side of the TV will operate the same as these buttons on the remote control.

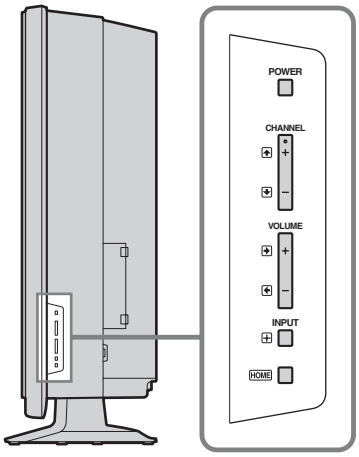

- The **5**, **PLAY** and **CH +** buttons have a tactile dot. Use them as a reference when operating the TV.

Button	Description
1 **DISPLAY**	Press once to display the information pertaining to the channel and/or program when available. The OSD (On Screen Display) will time out in a few seconds or press again to immediately turn off the display. You can also set the display to show minimal information. See **Info Banner** on page 48.
2 **LIGHT**	Press to illuminate the buttons on the remote control so that you can control them easily even if the room is dark.
3 **FUNCTION Buttons**	The **FUNCTION** button indicator lights up momentarily when pressed to show which external equipment the remote control is operating. When the remote control is set to operate the external equipment, these buttons will operate the equipment you choose. You must first press one of these **FUNCTION** buttons to operate the corresponding equipment. See page 29 for programming the remote control.

(Continued)

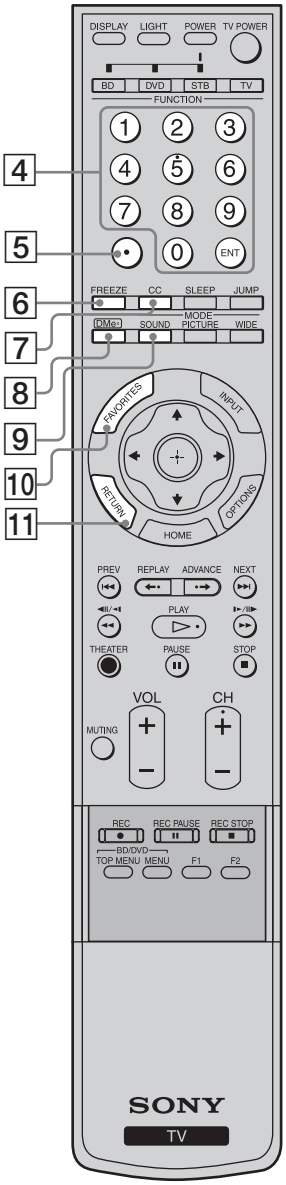

Button	Description
4 **0-9 ENT**	Press **0-9** to select a channel; the channel changes after two seconds. Press **ENT** to change channels immediately.
5 ⊙	Use with **0-9** and **ENT** to select digital channels. For example, to enter 2.1, press ②, ⊙, ① and **ENT**.
6 **FREEZE**	Press once to display a frozen image with the current program in a window. Press again to return to the current program. ✍ • With the **Freeze** feature active, some features are unavailable. • While the **Freeze** feature is active, pressing **HOME** will deactivate **Freeze** and display the **XMB**™. • If **Parental Lock** settings are in use, only the frozen picture view is available and the audio is disabled.
7 **CC**	Press to turn on and off the **Closed Captions (CC)**. To change or customize **CC Display**, see page 45.
8 **DMe**^{x}	Press to access features in the optional BRAVIA external module. See your dealer or www.sony.com/bravia for more information. The module may not be available in your region.
9 **SOUND**	Press to cycle through different sound settings: **Dynamic** for enhanced treble and bass, **Standard** for spoken dialog and **Custom** to customize the sound settings including the **Sound Booster** setting.
10 **FAVORITES**	Press once to display the stored favorite channel list. You can store up to 30 channels in your **Favorites** list. **How to Add to Favorites** While tuned to the channel you want to add to the list, press **OPTIONS** and highlight "Add to Favorites", then press ⊕. A confirmation message of "Channel added to Favorites" will appear for a few seconds. **How to Remove from Favorites** While tuned to a channel that exists in the **Favorites** list, press **OPTIONS** and highlight "Remove from Favorites", then press ⊕. A confirmation message of "Channel removed from Favorites" will appear for a few seconds. ✍ Your **Favorites** list will be cleared each time you run **Auto Program** (see pages 22 and 44 for **Auto Program**).
11 **RETURN**	Press to go back to the previous screen or exit from the screen when displaying menu items and settings.

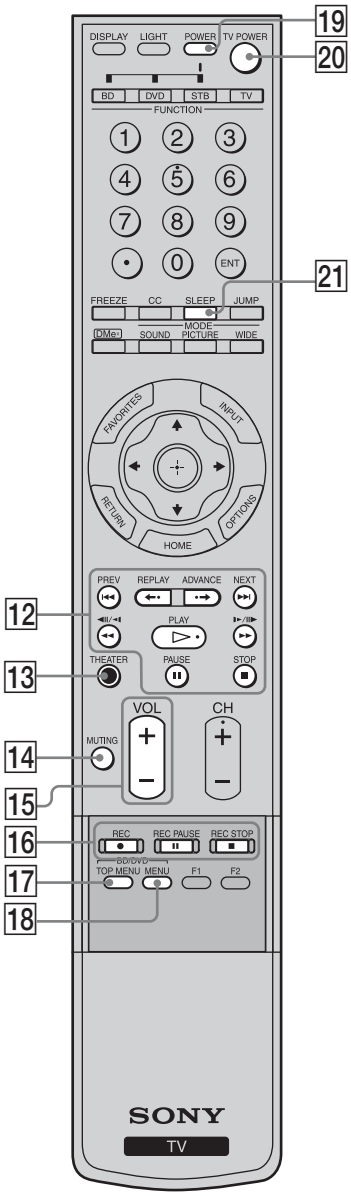

Button	Description
12 **BD, DVD or STB Operating Buttons**	When **FUNCTION** is selected with **BD (Blu-ray Disc)**, **DVD** or **STB**, these buttons operate the video equipment you have programmed into the remote control. For details, see "Using Other Equipment with Your Remote Control" on page 31. **⏮ PREV**: Press to replay the current program from the previous chapter mark (if any) or from the beginning of the live TV cache. **←• REPLAY**: Press to replay the current program for a set period of time. **•→ ADVANCE**: Press to advance forward a set period of time when playing back a recorded program. **⏭ NEXT**: Press to advance forward to the next chapter mark (if any) or to live TV when playing back a recorded program. **◀◀ (fast reverse)**: Press to play a program in fast rewind mode. **▷ PLAY**: Press to play a program at a normal speed. **▶▶ (fast forward)**: Press to play a program in fast forward mode. **❚❚ PAUSE**: Press to pause playback. **■ STOP**: Press to stop the playback of a recorded program.
13 **THEATER**	Press to turn on and off the Theater Mode. The picture settings will be set for a cinema-like experience and the audio will be switched to the audio output of the attached speakers of your BRAVIA Theatre Sync audio system. Your BRAVIA Theatre Sync audio system must be connected by an HDMI connection to your TV (see page 20 for details).
14 **MUTING**	Press to mute the sound. Press again or press **VOL +** to restore the sound.
15 **VOL +/–**	Press to adjust the volume.
16 **DVR/VCR Record Buttons**	**● REC**: Press to record. Pressing this button alone starts the recording process. **❚❚ REC PAUSE**: Press to pause the recording. **■ REC STOP**: Press to stop the recording.
17 **BD/DVD TOP MENU**	Press to display the top menu of the BD/DVD disc.
18 **BD/DVD MENU**	Press to display the BD/DVD disc menu. ✍ • For more information, refer to the operating manual of the connected equipment.
19 **POWER**	Press to turn on and off the external equipment selected by the **FUNCTION** buttons 3.
20 **TV POWER**	Press to turn on and off the TV.
21 **SLEEP**	Press repeatedly until the TV displays the time in minutes (**Off**, **15min**, **30min**, **45min**, **60min**, **90min** or **120min**) that you want the TV to remain on before shutting off. To cancel **Sleep Timer**, press **SLEEP** repeatedly until **Off** appears.

(Continued)

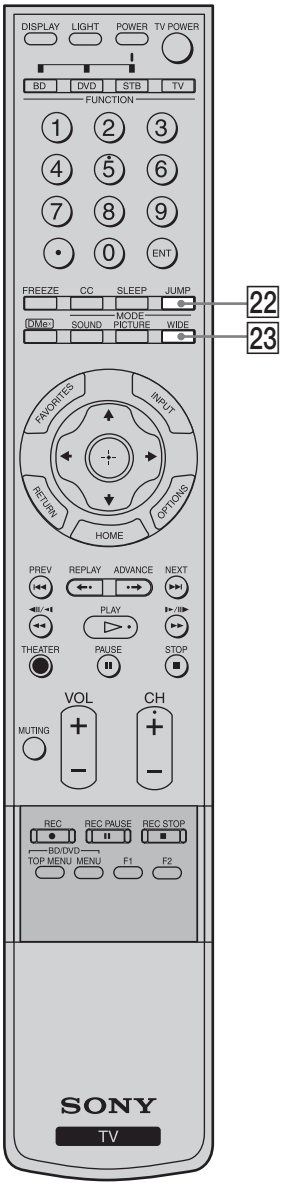

Button	Description
22 **JUMP**	Press to jump back and forth between two channels. The TV alternates between the current channel and the last channel that was selected. 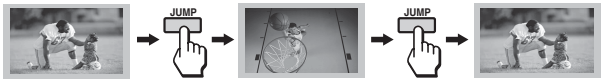
23 **WIDE**	Press repeatedly to step through the **Wide Mode** settings: **Wide Zoom**, **Normal**, **Full**, **Zoom**. The **Wide Mode** settings can be also accessed in the **Screen** settings (see page 40).

Changing the Wide Screen Mode

(For PC timing, see below)

4:3 Original source Standard-definition source	**16:9 Original source** High-definition source
Wide Zoom	**Wide Zoom**
Normal	**Normal**
Full	**Full**
Zoom	**Zoom**

Changing the Wide Screen Mode for PC Timing

Incoming PC signal Less than 16:9 PC format	**Incoming PC signal** 16:9 PC format
Normal (May not be available in some formats.)	**Normal** (May not be available in some formats.)
Full 1	**Full 1**
Full 2	
Zoom (May not be available in some formats.)	**Zoom** (May not be available in some formats.)

- It is normal to have a black frame surrounding the picture with all input formats.

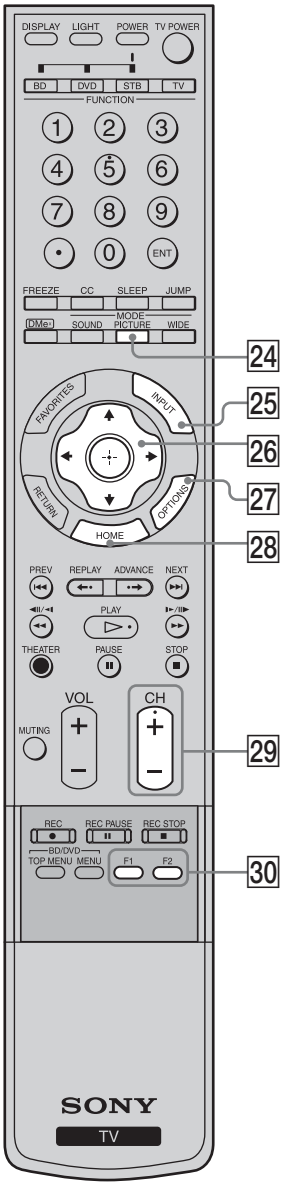

Button	Description
24 **PICTURE**	Press repeatedly to cycle through the available picture modes: **Vivid**, **Standard**, **Cinema**, **Photo**, **Custom**. (Available options depend on the current mode.) The picture modes can also be accessed in the **Picture** settings. For details, see **Picture** settings on page 37.
25 **INPUT**	Press to display the list of **External Inputs** and TV mode. Press repeatedly to toggle through the inputs. • Inputs can be changed by pressing ↑/↓ and ⊕ while the list of **External Inputs** is displayed. • See page 47 on setting up the **External Inputs** labels, including the **Skip** feature.
26 ↑/↓/←/→ ⊕	Press ↑/↓/←/→ to move the on-screen cursor. Press ⊕ to select/confirm an item.
27 **OPTIONS**	Press to display a list of convenient functions and menu shortcuts. The **OPTIONS** menu items vary based on input and content.

Menu Item	Reference Page
Picture	See page 37
Sound	See page 39
P&P or PIP	See page 34
Exit P&P or Exit PIP	See page 34
Motion Enhancer	See page 42
Speakers	See page 44
Add to Favorites/ Remove from Favorites	See page 24
MTS	See page 43
Alternate Audio	See page 44
Digital Rating	See page 46
Screen	See page 40

• **Motion Enhancer** can only be set for the current input.
• When **Digital Rating** is selected, an icon appears to inform you of the current program's digital rating.

28 **HOME**	Press to display the **TV Home Menu/XMB**™ to access the **TV Home Menu** items such as the TV **Settings**, **TV** channels and **External Inputs** list (see pages 9 and 35). 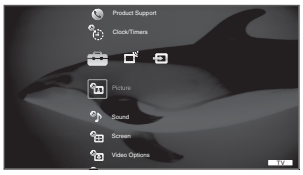 Press **HOME** again to exit the XMB™.
29 **CH +/–**	Press to scan through channels. To scan quickly through channels, press and hold down either **+/–**.
30 **F1/F2**	Press to select the function of connected components. For details, see "Using Other Equipment with Your Remote Control" on page 31.

Indicators

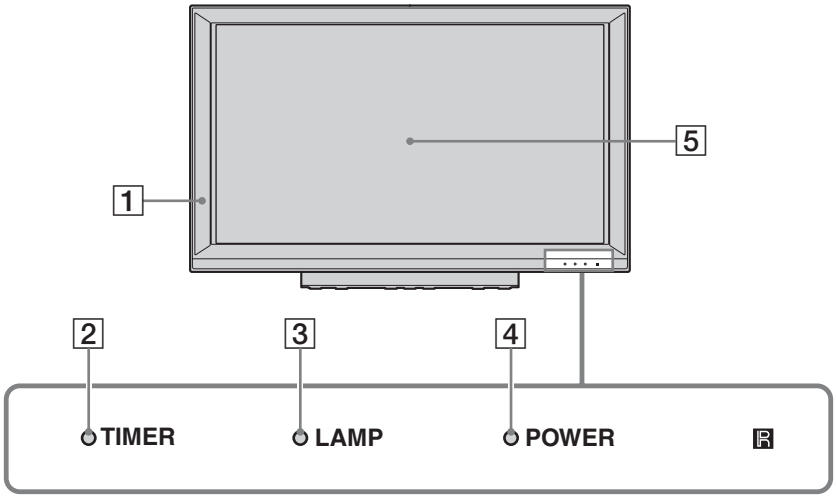

Item	Description
1 **Speaker**	Outputs the audio signal.
2 **TIMER LED**	Lights up in orange when the timer is set. This LED will remain lit even if the TV is turned off. For details, see page 37.
3 **LAMP LED**	The projection lamp has burned out. Replace it with a new one (see page 49).
4 **POWER LED**	Lights up in green when the TV is turned on. Also lights up in red during the diagnostics.
5 **(IR) Infrared Receiver**	Receives IR signals from the remote control. Point the remote control at the center of the TV screen.

Programming the Remote Control

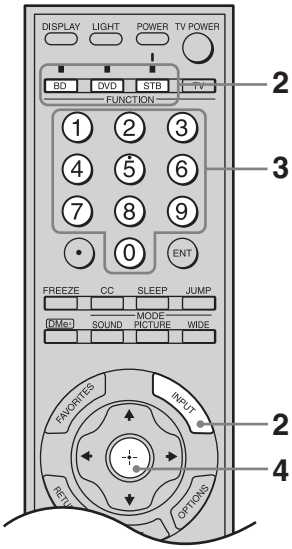

Operating Sony Brand Video Equipment

The remote control is preset as indicated below so that you do not need to program the remote control.

Sony Equipment	Programmable Code Number
BD	101 (Sony Blu-ray Disc Player)
DVD	751 (Sony DVD Player)
STB	801 (Sony Satellite Receiver)

Programming Non-Sony Video Equipment

Follow the steps below to program your TV's remote control.

1 In the space provided below, write down the three-digit code of your equipment found on the Manufacturer's Codes List on page 30.

If more than one code is listed, try entering the code listed first.

Code No._____

2 Press and hold BD, DVD or STB and INPUT simultaneously to light the **FUNCTION** button.

3 Enter the three-digit code using 0-9 while the selected button is lit. If the code is not entered within 10 seconds, you must repeat step 2.

4 Press ⊕ while the **FUNCTION** button is lit.

The selected **FUNCTION** button will blink twice if your equipment is programmed correctly and five times if it is not.

To Confirm the Programming

If you can turn on and off the equipment by pressing the green POWER button, then the programming is complete. If not, try the next code listed.

- In some cases, you may not be able to program your remote control. If this is the case, use your equipment's own remote control.
- Any one of the **FUNCTION** buttons can be programmed to operate other equipment regardless of the labeling. For example, if programmed with the correct code, DVD can operate DVD/VCR combo equipment. This is useful if your equipment does not match the labeled buttons available. Make note of your equipment's programmed button.
- You may program one equipment per **FUNCTION** button.

(Continued)

Manufacturer's Codes

DVD Players

Manufacturer	Code
Sony	751, 763
General Electric/ RCA	755
Hitachi	758
JVC	756
Magnavox	757
Mitsubishi	761
Oritron	759
Panasonic	753
Philips	757
Pioneer	752, 778
RCA/PROSCAN	755
Samsung	758
Toshiba	754
Zenith	760, 762

DVD/VCR Combo Units

Manufacturer	Code
Sony	767
Broksonic	776
JVC	775
Panasonic	777
Samsung	774
Toshiba	773
Zenith	768

HDD/DVD Combo Units

Manufacturer	Code
Sony	770, 771, 772

DVD Changers

Manufacturer	Code
Sony	765
Panasonic	766

DVR

Manufacturer	Code
Sony	901
DirecTV	902, 903
Samsung	902, 903

Blu-ray Disc Player (BD)

Manufacturer	Code
Sony	101, 102, 103

5.1ch DVD AV System

Manufacturer	Code
Sony (DAV)	601, 602, 603, 604

AV Receivers

Manufacturer	Code
Sony	764

VCRs

Manufacturer	Code
Sony	301, 302, 303 (VHS, 8mm, Beta)
Sony DV	348
Admiral (M. Ward)	327
Aiwa*	338, 344
Audio Dynamic	314, 337
Broksonic	317, 319
Canon	308, 309
Citizen	332
Craig	302, 332
Curtis Mathes	304, 309, 338
Daewoo	309, 312, 341
DBX	314, 336, 337
Dimensia	304
Emerson	316, 317, 318, 319, 320, 341
Fisher	330, 335
Funai	338
General Electric	304, 309, 329
Go Video	322, 339, 340
Goldstar	332
Hitachi	304, 305, 306, 338
Instant Replay	308, 309
JC Penney	304, 305, 309, 314, 330, 336, 337
JVC	314, 336, 337, 345, 346, 347
Kenwood	314, 332, 336, 337
LG	332
LXI (SEARS)	305, 330, 332, 335, 338
Magnavox	308, 309, 310
Marantz	314, 336, 337
Marta	332
Memorex	309, 335
Minolta	304, 305
Mitsubishi/MGA	323, 324, 325, 326
Multitech	321, 325, 338
NEC	314, 336, 337
Olympic	308, 309
Optimus	327
Orion	317
Panasonic	306, 307, 308, 309
Pentax	304, 305
Philco	308, 309
Philips	308, 309, 310
Pioneer	308
Quasar	306, 308, 309
RCA/PROSCAN	304, 305, 308, 309, 310, 311, 312, 313, 329
Realistic	309, 324, 328, 330, 335, 338
Sansui	314
Samsung	313, 321, 322
Sanyo	330, 335
Scott	312, 313, 321, 323, 324, 325, 326, 335
Sharp	327, 328
Signature 2000 (M. Ward)	327, 338
SV2000	338
Sylvania	308, 309, 310, 338
Symphonic	338
Tashiro	332
Tatung	314, 336, 337
Teac	314, 336, 337, 338
Technics	308, 309
Toshiba	311, 312
Wards	327, 328, 331, 332, 335
Yamaha	314, 330, 336, 337
Zenith	331

Cable Boxes

Manufacturer	Code
Sony	230
Hamlin/Regal	222, 223, 224, 225, 226
Jerrold, General Instrument or Motorola	201, 202, 203, 204, 205, 206, 207, 208, 218, 222
Oak	227, 228, 229
Panasonic	219, 220, 221
Pioneer	211, 214, 215
Scientific Atlanta	209, 210, 211
Tocom	216, 217
Zenith	212, 213

Satellite Receivers

Manufacturer	Code
Sony	801
DirecTV	902, 903
Dish Network	810
Echostar	810
General Electric	802
Hitachi	805
Hughes	804
Humax	902, 903
JVC	810
LG	902, 903
Mitsubishi	809
Panasonic	803
Philips	811, 902, 903
RCA/PROSCAN	802, 808, 902, 903
Toshiba	806, 807
Samsung	812, 902, 903

* If an Aiwa VCR does not work even though you enter the code for Aiwa, enter the code for Sony instead.

Using Other Equipment with Your Remote Control

Make sure that the equipment is programmed on the remote control (page 29).
Press **INPUT** repeatedly until you see the video input on the screen for your connected equipment.
Remote control tips are provided below.

- Equipment marked with an (*) below may not necessarily be activated by the suggested button if it has been programmed with another **FUNCTION** button.
- Use the remote control supplied with your connected equipment if a function cannot be operated.

Cable Box

To Do This ...	*Press ...*
Activate the remote control to operate the cable box	**STB (FUNCTION)**
Turn on/off	**POWER**
Select a channel	**0-9**, **ENT**
Change channels	**CH +/–**
Back to previous channel	**JUMP**

Satellite Receiver

To Do This ...	*Press ...*
Activate the remote control to operate the satellite receiver	**STB (FUNCTION)**
Turn on/off	**POWER**
Select a channel	**0-9**, **ENT**, ⊙
Change channels	**CH +/–**
Back to previous channel	**JUMP**
Display channel number	**DISPLAY**
Display SAT Guide	**OPTIONS**
Display SAT Menu	**HOME**
Move highlight (cursor)	↑ ↓ ← →
Select item	⊕

VCR*

To Do This ...	*Press ...*
Activate the remote control to operate the VCR	**STB (FUNCTION)**
Turn on/off	**POWER**
INPUT SELECT	**INPUT**
Select a channel	**0-9**, **ENT**
Change channels	**CH +/–**
Record	●
Play	▷
Stop	■
Fast forward	▶▶
Rewind the tape	◀◀
Pause	❚❚ (press again to resume normal playback)

DVD Player or DVD Changer

To Do This ...	*Press ...*
Activate the remote control to operate the DVD	**DVD (FUNCTION)**
Turn on/off	**POWER**
If you have a DVD changer, to skip disc	**F1**
Play	▷
Stop	■
Pause	❚❚ (press again to resume normal playback)
Step through different tracks of the disc	◀◀ to fast reverse or ▶▶ to fast forward the disc when pressed during playback
Step through different chapters of the disc	▶▶❙ to step forward or ❙◀◀ to step backward
Select a track directly	**0-9**, **ENT**
Display the disc menu or top menu	**BD/DVD MENU** or **TOP MENU**
Operate the DVD menu	↑ ↓ ← →, ⊕
Display the system MENU	**HOME**
Return	**RETURN**

Blu-ray Disc Player (BD)

To Do This ...	*Press ...*
Activate the remote control to operate the Blu-ray Disc Player	**BD (FUNCTION)**
Turn on/off	**POWER**
Play	▷
Stop	■
Pause	❚❚ (press again to resume normal playback)
Step through different tracks of the disc	◀◀ to fast reverse or ▶▶ to fast forward the disc when pressed during playback
Display the POP UP menu (BD)	**BD/DVD MENU**
Display the disc menu (DVD)	**BD/DVD MENU**
Display the top menu (BD)	**BD/DVD TOP MENU**
Display the top menu (DVD)	**BD/DVD TOP MENU**
Operate the menu	↑ ↓ ← →, ⊕
MENU ON/OFF	**HOME**

(Continued)

To Do This ...	Press ...
Specify the previous chapter/track Specify the next chapter/track	⏮ ⏭
Return to the previous display	**RETURN**

5.1ch DVD AV System (Sony DAV)

To Do This ...	Press ...
Activate the remote control to operate the DVD	**DVD (FUNCTION)**
Turn on/off	**POWER**
Select other equipment connected to the DAV	**F1**
Disk skip	**F2**
Display the disc menu or top menu	**BD/DVD MENU** or **TOP MENU**
Select a track directly	**0-9**, **ENT**
Play	▷
Stop	■
Pause	❚❚
Search the picture forward or backward	▶▶ or ◀◀ during playback
Specify the previous chapter/track Specify the next chapter/track	⏮ ⏭
Move highlight (cursor)	↑ ↓ ← →
Select item	⊕
Master volume	**VOL +/–**, **MUTING**

DVD/VCR Combo Unit

To Do This ...	Press ...
Activate the remote control to operate the DVD/VCR	**DVD (FUNCTION)**
Turn on/off	**POWER**
Select the DVD Select the VCR	**F1** **F2**
Display the disc menu or top menu	**BD/DVD MENU** or **TOP MENU**
Play	▷
Stop	■
Pause	❚❚
Search the picture forward or backward	▶▶ or ◀◀ during playback
Move highlight (cursor) and select (DVD)	↑ ↓ ← →, ⊕
Record (VCR)	●
Change channels (VCR)	**CH +/–** or **0-9**, **ENT** (using tuner)
Adjust tracking (VCR)	**CH +/–** (during tape playback)
Index search	⏮ ⏭

To Do This ...	Press ...
INPUT SELECT	**INPUT**
MENU ON/OFF	**HOME**

HDD/DVD Combo Unit

To Do This ...	Press ...
Activate the remote control to operate the DVD/HDD	**DVD (FUNCTION)**
Turn on/off	**POWER**
Select the HDD Select the DVD	**F1** **F2**
Play	▷
Stop	■
Pause	❚❚
Search the picture forward or backward	▶▶ or ◀◀ during playback
Move highlight (cursor) and select	↑ ↓ ← →, ⊕
Record	●
Record stop	■
Record pause	❚❚
Specify the previous chapter/track Specify the next chapter/track	⏮ ⏭
Replay	←•
Advance	•→
Display the disc menu or top menu	**BD/DVD MENU** or **TOP MENU**
INPUT SELECT	**INPUT**
MENU ON/OFF	**HOME**
Search DVD by title or chapter	**OPTIONS**
Return to the previous display	**RETURN**

AV Receiver*

To Do This ...	Press ...
Activate the remote control to operate the AV Receiver	**STB (FUNCTION)**
Turn on/off	**POWER**
Master volume	**VOL +/–**, **MUTING**
Select other input connected to AV receiver	**F1**

DVR*

To Do This ...	Press ...
Activate the remote control to operate the DVR	**DVD (FUNCTION)**
Turn on/off	**POWER**
Play	▷

To Do This ...	Press ...
Replay the current program for a set period of time	←•
Advance forward a set period of time when playing back a recorded program	•→
Specify the previous chapter mark Specify the next chapter mark	⏮ ⏭
Stop	■
Pause	❚❚
Record	●
Open the Favorites List	**FAVORITES**
Open the Guide	**OPTIONS**
Open Main Menu	**HOME**
Move highlight (cursor)	↑ ↓ ← →
Select item	⊕
Close on-screen display	**RETURN**
Page +/-	**CH+/-**
Open the RECORDINGS List	**TOP MENU**

Using P&P and PIP Features

This TV comes with the **P&P** and **PIP** features which allow you to view two pictures simultaneously. **P&P** (picture and picture) provides two windows side by side. **PIP** (picture in picture) provides PC input signal and TV channels.

- The VHF/UHF/CABLE input must be connected to use the **PIP** feature.
- For the **PIP** feature, **Closed Caption (CC)** is not available.

P&P

PIP

To Display the Sub Window

1 Press **OPTIONS** to display the **OPTIONS** menu while watching one of the following inputs: TV channels, Video, Component, HDMI or PC.

2 Press ↑/↓ to highlight **P&P** or **PIP**, and press ⊕ to display the sub window.

P&P Availability	
In main window	**In sub window**
Video 1/2/3 Component 1/2 HDMI IN 1/2/3/4 (except PC timing)	TV Channel (VHF/UHF/ CABLE IN) Video 1/2/3 Component 1/2

PIP Availability	
In main window	**In sub window**
PC HDMI IN 1/2/3/4 (PC timing)	TV Channel (VHF/UHF/ CABLE IN)

- To swap audio in **P&P** mode, use the ←/→ button to swap the highlight between the main window and sub window.
- To swap audio in **PIP** mode, press **OPTIONS**, then press ↑/↓ to highlight **Audio Swap**.
- 1080p signal cannot be displayed for Component 1/2 in the sub window in **P&P** mode.
- For compatible PC Timings, refer to the PC Input Reference Chart (see page 19).

To Change Inputs or Channels in the Window

Press ←/→ to highlight the window to change, and press **INPUT** to select the input to watch, or press **CH +/–** to change channels or enter the channel number using the **0-9** numeric buttons.

- You may also press **JUMP** to change channels.
- Inputs with **Skip** applied will not appear in the list of **External Inputs** (see page 47 for **External Inputs** settings).

To Change the Window Size of P&P

Press ←/→ to highlight the window, and press ↑/↓ to change the window size.

To Exit from P&P and PIP

1 Press **OPTIONS** to display the **OPTIONS** menu.

2 Press ↑/↓ to highlight **Exit P&P** or **Exit PIP** (depends on the mode you are in), and press ⊕ to exit.

- You may also press **RETURN** while in these features to exit.
- Additional compatible device with television tuner is required to watch two simultaneous live television program.

Using the Menus

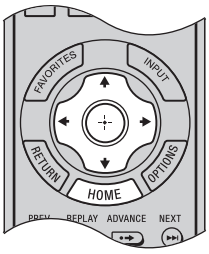

The **HOME** button allows you to access the **TV Home Menu** on the **XMB**™ (XrossMediaBar) as well as a variety of TV features.

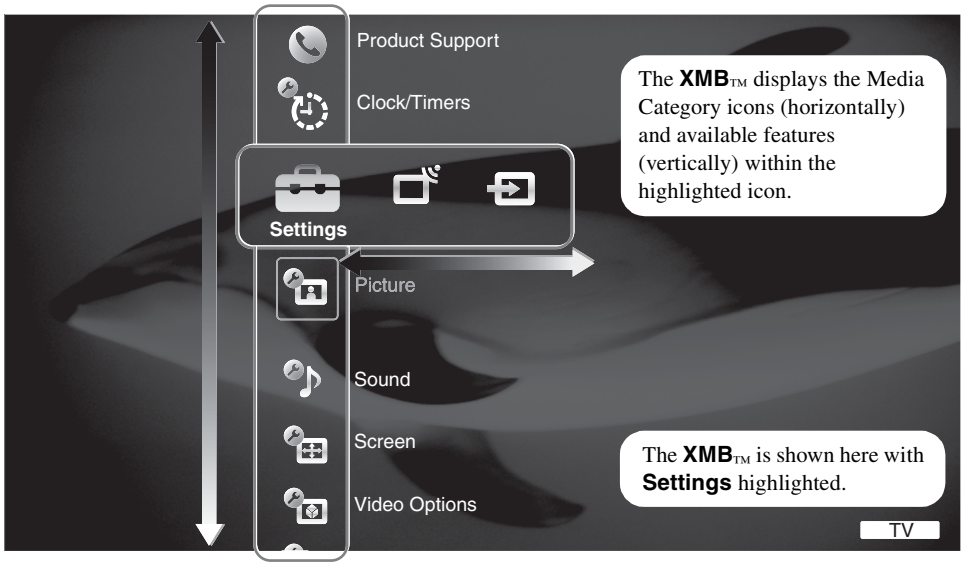

Media Category Icons

Settings

Adjusting TV Settings

Customize the TV settings with various options.
Explanations of different **Settings** start from page 37.

- The available options vary depending on the situations and conditions applied. Unavailable options are grayed out or not displayed.

TV

Watching TV

Select a channel.

- You can also select a TV channel using the number **0-9** or **CH +/–** buttons (see remote control section pages 24 and 27).

External Inputs

Accessing the Equipment Connected to Your TV

Watch a movie, play a game, record a program or work on your PC.
Assign a label using the **Label Inputs** feature for your convenience, see page 47.

Navigating through TV Home Menu on XMB™

1

Press **HOME** to display the **XMB**™.

2

Press ←/→ to select a Media Category icon.

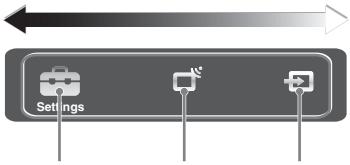

Available TV settings and features are listed under the **Settings** icon.

Available channels are listed under the **TV** icon.

Select inputs from
Video1, 2, 3
Component 1, 2
HDMI 1, 2, 3, 4
PC
under the **External Inputs** icon.

3

Press ↑/↓ to move within the Category Object Bar.
(The Category Object Bar shown below is for the **Settings**.)

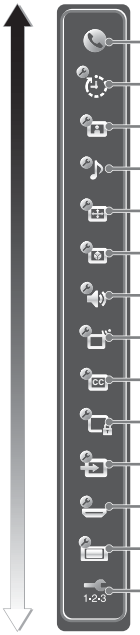

Product Support (page 37)
Clock/Timers (page 37)
Picture (page 37)
Sound (page 39)
Screen (page 40)
Video Options (page 42)
Audio Options (page 43)
Channel (page 44)
Closed Captions (CC) (page 45)
Parental Lock (page 45)
External Inputs (page 47)
HDMI Settings (page 48)
General (page 48)
Initial Setup (page 48)

4

Press ⊕ when desired item is highlighted.

5

Press ⊕ or, ↑/↓ to select the highlighted item.

6

Press **RETURN** or **HOME** to exit.

TV Setting Description

Product Support

Contact Sony	Sony contact information is available from this screen for your convenience. Your TV's specific information such as Model Name, Serial Number, Software Version and downloadable ratings version, if available from the TV, is displayed here.
Signal Diagnostics	Press ⊕ to display the diagnostics information for the current signal.

Clock/Timers Settings

Current Time	Sets the current time (day, hour, minutes, and AM/PM). The **Timer** feature will not be available until you set **Current Time**. **1** Use the ↑/↓/←/→ button to highlight the **Clock/Timers** icon and press ⊕. **2** Use the ↑/↓/←/→ button to set the current time and press ⊕. **3** Press **RETURN** to display the confirmation screen. **4** Select **Yes** or **No** to save changes you made. Selecting **Yes** will save your settings and exit the **Current Time** setting screen.
Timer	**Timer** can be set, so the TV tunes to a certain channel as well as a specified volume at the specified time you set. After this is executed the TV will turn off at the specified time you set. **1** Use the ↑/↓/←/→ button to highlight the **Timer** icon and press ⊕. **2** Press ⊕ to select **On** to set the timer. **3** Use the ↑/↓/←/→ button to set the following: **Day of the Week**, **Time**, **Duration**, **Channel**, and **TV On Volume**. **4** Press **RETURN** to display the confirmation screen. **5** Select **Yes** or **No** to save changes you made. Selecting **Yes** will save your settings and will light up the TIMER LED. Exit the **Timer** setting screen.
Sleep Timer	Sets the time in minutes (**Off**, **15min**, **30min**, **45min**, **60min**, **90min**, or **120min**) that you want the TV to remain on before shutting off automatically. This can also be set using the **SLEEP** button on the remote control (see page 25).

Picture Settings

Picture Mode	**Vivid**	For enhanced picture contrast and sharpness.
	Standard	For standard picture settings. Recommended for home entertainment.
	Cinema	For viewing film-based content. Most suitable for viewing in a theater-like environment.
	Photo	For viewing still image content.
	Custom	Allows you to store your preferred settings.

(Continued)

	✍ • **Picture Mode** for all inputs can also be accessed by pressing **PICTURE** on the remote control to directly toggle the modes. • The options for **Picture Mode** may differ depending on the **Video/Photo Optimizer** setting (see page 43).	
Reset	Resets the current **Picture Mode** setting to the default values.	
Advanced Iris	By selecting the iris option, you can obtain the best brightness and contrast suited for your TV viewing.	
	Auto 1, 2	Automatically detects the brightness of the screen. These options are best suited for programs such as movies that often change between bright scenes and low light setting scenes. **Auto 1**: Recommended option for viewing programs that have larger variation in brightness from scene to scene. **Auto 2**: Recommended option for viewing programs that have less variation in brightness from scene to scene.
	Max	With this option, the brightness has reached the maximum level.
	High	With this option, the screen has a high level of brightness. It is suitable for TV viewing in a brightly lit room.
	Medium	With this option, the brightness is about the standard level.
	Low	With this option, the screen is dimmed but contrast is at a maximum. It is suitable for TV viewing in a room with low lighting.
	Min	With this option, the brightness is at the minimum level.
Picture	Increases or decreases picture contrast.	
Brightness	Brightens or darkens the picture.	
Color	Increases or decreases color intensity.	
Hue	Increases or decreases the green tones.	
Color Temperature *White adjustment*	**Cool**	Gives the white colors a bluish tint.
	Neutral	Gives the white colors a neutral tint.
	Warm 1, 2	Gives the white colors a reddish tint.
Sharpness	Sharpens or softens the picture.	
Noise Reduction	Reduces the noise level of connected equipment, and the VHF/UHF/CABLE input.	
MPEG Noise Reduction	Reduces the mosaic effect in MPEG-compressed video. Useful for DVDs and Digital TV channels.	
DRC Mode	Produces a high-resolution picture for high-density sources (e.g., Blu-ray Disc Player, DVD Player, satellite receiver).	
	Mode 1	Recommended mode.
	Mode 2	Only available for 1080i format. **Mode 2** is especially effective when original standard-definition signals have been up-converted to 1080i format.
	Off	Turns off **DRC Mode**.
	✍ • **DRC Mode** is available with all sources except for 1080p. • **DRC Mode** is not available when **Game/Text Mode** is set to **On**.	

DRC Palette	Allows you to customize the level of detail (**Reality**) and smoothness (**Clarity**). **1** Press the arrow buttons to highlight **DRC Palette** then press ⊕. The **DRC Palette** appears. 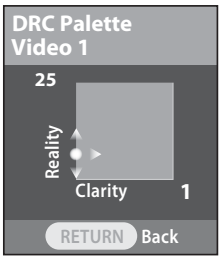 **2** Press the arrow buttons to adjust the position of the marker (●). As you move the ● higher along the **Reality** axis, the picture becomes more detailed. As you move the ● to the right along the **Clarity** axis, the picture becomes smoother. ✍ • **DRC Palette** is available with all sources except for 1080p. • **DRC Palette** is not available when **Game/Text Mode** is set to **On**, or when using the **Freeze** feature.	
Advanced Settings	**Reset**	Resets all the advanced settings to the default values.
	Black Corrector	Enhances black areas of the picture for stronger contrast.
	Gamma	Adjusts the balance between the light and dark areas of the picture.
	Clear White	Emphasizes white and light colors.
	Color Space	Selects the range of color reproduction from **Wide** or **Standard**.
	Live Color	Makes colors more vivid and reproduces clear skin tones.
	White Balance	Adjusts the color temperature color by color.
	Detail Enhancer	Enhances the details of the picture.
	Edge Enhancer	Enhances the outline of the picture.

✍
- **Picture** settings for all inputs can also be accessed by pressing **OPTIONS** on the remote control, then selecting **Picture** from the **OPTIONS** menu.
- **Picture** settings for PC Timings (HDMI or PC input) are the same as other input modes (see above for details), but **Noise Reduction**, **MPEG Noise Reduction**, **DRC Mode**, **DRC Palette** and **Detail Enhancer** are not available.

Sound Settings

Available **Sound** settings depend on the **Speakers** setting under **Audio Options** settings (page 44).

Sound Mode	**Dynamic**	Enhances treble and bass.
	Standard	Suitable for spoken dialog.
	Custom	Customizes the sound settings including the **Sound Booster** setting.
Reset	Resets the current **Sound Mode** setting to the default values.	
Treble	Increases or decreases higher-pitched sounds.	
Bass	Increases or decreases lower-pitched sounds.	
Balance	Emphasizes left or right speaker balance.	

(Continued)

Surround	**S-FORCE Front Surround**	Provides a virtual surround sound experience made possible using just two front speakers.
	Off	Select for normal stereo or mono reception.
Voice Zoom	Adjusts the clarity of human voices. For example, if the voice of a news announcer is indistinct, you can turn up this setting to make the voice clearer. Conversely, if you are watching a sports program, you can turn down this setting to soften the voice of the commentator.	
Sound Booster	**Sound Booster** provides a fuller sound with a greater sense of depth and width, by emphasizing the high and low frequency sounds. Select **High** or **Low** for the amount of boost you desire while in **Custom** of the **Sound Mode**. Selecting **Off** will bypass the emphasis. ✍ • **Sound Booster** is automatically set to **High** for **Dynamic** of **Sound Mode** and **Low** for **Standard** of **Sound Mode**.	
Steady Sound	**On**	Stabilizes the volume across all programs and commercials.
	Off	Turns off **Steady Sound**.
Volume Offset	Adjusts the volume level of the current input (TV or video input) relative to other inputs.	

✍
- **Sound** settings can also be accessed by pressing **OPTIONS** on the remote control.
- **Sound** settings for PC Timings (HDMI or PC input) are the same as all other input modes (see above for details).

Screen Settings

✍
- This television's picture is slightly overscanned on the screen to prevent artifacts or lack of picture at screen edge caused by television signal or other video sources.

Wide Mode	**Wide Zoom**	Fills the screen with minimum distortion.
	Normal	Displays the 4:3 picture in its original aspect ratio when the original source is 4:3.
	Full	Enlarges the picture horizontally to fill the screen when the original source is 4:3 (Standard-definition source). When the original source is 16:9 (High-definition source), select this mode to display the 16:9 picture in its original size.
	Zoom	Enlarges the picture horizontally and vertically to fill the screen while maintaining the aspect ratio. ✍ • **Wide Mode** can also be accessed by pressing **WIDE** on the remote control. • See **WIDE** button description on page 26 for accessing **Wide Mode**.
Auto Wide	**On**	Automatically changes **Wide Mode** setting based upon content. If frequent screen changes are disturbing to you, select **Off**.
	Off	Turns off **Auto Wide**. Choose a screen mode from the **Wide Mode** option.

4:3 Default *Select the default screen mode to use for 4:3 sources*	**Wide Zoom**	Enlarges the 4:3 picture to fill the 16:9 screen, displaying as much of the original image as possible.
	Normal	Displays the 4:3 picture in its original aspect ratio.
	Full	Enlarges the 4:3 picture horizontally only, to fill the screen.
	Zoom	Enlarges the picture horizontally and vertically to fill the screen while maintaining the aspect ratio.
	Off	Continues using the current **Wide Mode** setting when the channel or input is changed.
	• **4:3 Default** is not available when **Auto Wide** is set to **Off**. • If **4:3 Default** is set to anything but **Off**, the **Wide Mode** setting applies only to the current channel. When you change channels (or inputs), **Wide Mode** is automatically replaced with the **4:3 Default** setting for 4:3 sources. To retain the current **Wide Mode** setting as channels and inputs are changed, set **4:3 Default** to **Off**.	
Display Area	**+1**	Displays the entire picture with a black frame on the edge of the screen. This setting can be selected for video signals of HDMI input.
	Normal	Displays the recommended picture area.
	-1/-2	Enlarges the picture to hide the edge of the picture.
Screen Position	Adjust the **Vertical** positioning by pressing ↑/↓. Press ←/→ to adjust the **Horizontal** positioning. • The **Screen Position** feature is useful if the TV is connected to game equipment. • **Screen Position** is available only when **Wide Mode** is set to **Zoom**.	
Vertical Size	Adjusts the vertical size of the picture. Press ←/→ and press ⊕ to adjust. • **Vertical Size** is available only when **Wide Mode** is set to **Wide Zoom** or **Zoom**.	

Screen settings for PC Timings (HDMI or PC input) differ from all other input modes and are shown below.

• It is normal to have a black frame surrounding the picture with all input formats.

Auto Adjust	Select **Yes** to start the auto adjust to display the PC input.
Reset	Resets the current screen setting to the default values.
Phase	Adjust after **Pitch** to fine tune overall sharpness.
Pitch	Adjust uneven sharpness on screen. • For the PC Input Signal Reference Chart, see page 19.
H Center	Allows you to move the position of the picture horizontally (left and right). **To Adjust the H Center** Press ↑/↓ to highlight **H Center** and press ⊕. Press ←/→ to correct the centering then press ⊕.
V Center	Allows you to move the position of the picture vertically (up and down). **To Adjust the V Center** Press ↑/↓ to highlight **V Center** and press ⊕. Press ←/→ to correct the centering then press ⊕.

(Continued)

Wide Mode	**Normal**	Displays the picture in its original resolution and aspect ratio.
	Full 1	Select to expand the picture size while maintaining the original aspect ratio.
	Full 2	Select to expand picture size without original aspect ratio.
	Zoom	Select to enlarge the picture horizontally and vertically to an equal aspect ratio that fills the wide screen.

- **Wide Mode** can also be accessed by pressing **WIDE** on the remote control.
- See **WIDE** button description on page 26 for accessing **Wide Mode**.

Video Options Settings

Motion Enhancer	Activates Motionflow to enhance the smoothness of picture movement and to reduce blur.	
	High	Provides smoother picture movement.
	Standard	Provides smooth picture movement. Use this setting for standard use.
	Off	Use this setting when the **High** and **Standard** settings result in noise.

- Depending on the video, you may not see the effect visually, even if you have changed the setting.
- **Motion Enhancer** is not available when **Game/Text Mode** is set to **On**.

Motion Naturalizer

The picture movement will become more fluid and natural by setting the appropriate mode.

Recommended Settings

Contents		Motion Enhancer	Motion Naturalizer
Broadcast programs (For normal use)	➡	**Standard** (default)	**Off** (default)
Sports, etc. (Fast moving picture)	➡	**Standard** (default)	**Mode 2**
Movie contents	➡	**Standard** (default)	**Mode 1**

Mode 1	Suitable for movie content. If the picture flickers, switch to **Off**.
Mode 2	Suitable for content with fast action scenes, such as sports, etc.
Off	Turns off **Motion Naturalizer**.

CineMotion

Automatically detects film-based content and applies a reverse 3-2 pulldown process. Moving pictures will appear cleaner and more natural looking.

Auto 1	For standard use and to provide smoother picture movement.
Auto 2	Picture movement will be similar to the original film.

- **Motion Enhancer** setting does not affect film-based content in **Auto 2** mode.

Off	Turns off the **CineMotion**.

- The **CineMotion** feature can be set separately for each input (except PC IN).

Game/Text Mode	When the signal is 480p, 720p, or 1080p, it provides the optimum screen for viewing images with fine lines and characters that are input from video game equipment and PCs. Set to **On** for the sharp display of fine lines or characters.	
Video/Photo Optimizer	Provides suitable image quality by selecting the option depending on the input source (video or photograph data).	
	Video-A	Sets suitable image quality, depending on the input source, video data or photograph data when directly connecting Sony HDMI output-capable equipment that supports **Video-A** mode.
	Video	Produces suitable image quality for moving pictures.
	Photo	Produces suitable image quality for still images.
	• The setting is fixed to **Video** when the HDMI input signal is 1080/24p, or when Video-A mode is not supported on the connected equipment, even if **Video-A** is selected.	
Video Color Space (x.v.Color)	Displays a moving picture that is more faithful to the original source by matching the color space of source. • Setting is fixed to **Normal** when the input signal is HDMI (RGB), even if **x.v.Color** is selected.	
Photo Color Space	Selects the option to match the output color space within the output signal from the equipment connected to the HDMI or component input jacks. Select **sYCC** when using the equipment that supports x.v.Color. • Setting is fixed to **sRGB** when the input signal is HDMI (RGB), even if **sYCC** is selected.	
Color Matrix	Allows you to reproduce the color-difference signals. It is recommended that you leave this at the factory default setting.	
	Auto	Automatically optimize based on signal.
	Custom	If the tone of the picture from the input source is unnatural, select either **ITU601** or **ITU709**, which normalizes the tone.
	• When inputting VIDEO 1 to 3, **ITU601** or **ITU709** can be selected instead of **Auto** or **Custom**.	
RGB Dynamic Range	Produces natural color by changing the luminance tone reproduction of HDMI input color signals (RGB). Set to **Auto** for standard use. Change the settings only when the luminance tone of the display is unnatural.	

Audio Options Settings

MTS *Enjoy stereo, bilingual and mono programs*	**Stereo**	For stereo reception when viewing a TV program broadcast in stereo.
	Auto SAP	Automatically switches the TV to second audio programs when a SAP signal is received. If no SAP signal is present, the TV remains in **Stereo** mode.
	Mono	For mono reception. Use to reduce noise during weak stereo broadcasts.
	• **MTS** is available only for analog programs.	

(Continued)

Speakers	**TV Speakers**	Select to use the TV speakers for audio.
	Audio System	Select this option if you wish to use an external audio system for the TV sound. By selecting this option you are disabling the TV speakers.
Audio Out *Easy control of volume adjustment*	**Fixed**	Select to fix the audio output and allow you to adjust the volume with your audio system's remote control. (The TV's remote control's **VOL** and **MUTING** buttons have no effect on **Audio Out**.)
	Variable	Select to control the **Audio Out**'s volume and muting with your TV's remote control.
Woofer Level	Increases or decreases the low frequency sounds.	

- **Alternate Audio** is available only for digital programs. If the program you are watching is also available in other languages from the audio tracks, and if that language is what you have selected in the **Language** setting, your TV will automatically switch to the matching language with the **Alternate Audio** feature. The **Alternate Audio** option may be accessed by pressing **OPTIONS** on the remote control when alternate audio stream is available from the broadcaster.

Channel Settings

Cable	**On**	For receiving cable channels via cable TV provider.
	Off	For using an antenna.
	• You should run **Auto Program** after changing the **Cable** setting.	
Auto Program	Automatically sets up the channel list on the TV for all receivable channels. Channel scanning will be based on **On**/**Off** of **Cable** setting. **1** Select **Auto Program**. **2** Select **OK** to start **Auto Program**. When **Auto Program** is completed, the screen will display the number of channels found. **3** Press **RETURN** to exit **Auto Program**. • Running **Auto Program** will clear **Favorites** list. • If you run **Auto Program** again, previously scanned channels will be overwritten with the newly scanned channels.	
Add Digital Channels	Select to add digital channels. Be sure to have the **Cable** option selected appropriately for the signal source. (Useful for antenna installation)	
Show/Hide Channels	Allows you to show or hide channels when you surf with the **CH +/–** button or in the **TV** channel list on the **XMB**™. **1** Press ↑/↓ to scroll through the channels until you highlight the channel to show or hide. **2** Press ⊕ to select **Shown** or **Hidden**. To show or hide more channels, repeat steps 1-2. • **Hidden** channels can be accessed by entering the channel number with **0-9** buttons on the remote control.	

Edit Channel Labels	Assigns labels (such as station call letters) to channel numbers. **1** Press ↑/↓ to scroll through the channel numbers. Then press ⊕ to select the channel number to assign a label. **2** Press ↑/↓ to scroll through the label characters (A-Z, 0-9, etc.). Press → to move to the next character. Repeat to add up to 7 characters to the label. Press ⊕ to set it. To assign labels to more channels, repeat steps 1-2.

Closed Captions (CC) Settings

CC Display	Allows you to turn **On** or **Off** the **Closed Captions (CC)** feature.	
Analog CC	For the basic analog (EIA-608) closed caption options.	
	CC1, **CC2**, **CC3**, **CC4**	Displays a printed version of the dialogue or sound effects of a program. (Should be set to **CC1** for most programs.)
	Text1, **Text2**, **Text3**, **Text4**	Displays network/station information presented using either half or the whole screen (if available).
Digital CC	For both analog (EIA-608) and digital (EIA-708) closed caption options. Select from **Service 1-6** and **CC1-4** (advanced digital closed caption options).	
Display Options	Customizes the **Closed Captions (CC)** displays with **Text**, **Character Size**, **Character Style**, **Character Color**, **Character Opacity**, **Edge Type**, **Edge Color**, **Background Color** and **Background Opacity.**	

✍
• **Closed Captions (CC)** can be turned on and off directly by pressing **CC** on the remote control.

Parental Lock Settings

The **Parental Lock** feature allows you to block programs according to their content and rating levels. It also allows you to block channels regardless of the program's rating. A password is necessary in setting up the **Parental Lock** feature.

To View Blocked Programs

Press **ENT** when tuned to a blocked program, then enter the password. To reactivate the **Parental Lock** settings, turn off and on the TV.

Password	Use **0-9** buttons on the remote control to enter a four-digit password. The first time the password is created, you must re-enter it again to confirm the password. "Password Set" message will appear on the screen upon confirmation. **Change Password** You can change your password by entering the **Parental Lock** setting with the previously set password, highlight and select **Change Password** then enter the new password. ✍ • You need your password for any future access into the **Parental Lock** settings. If you lose your password, see "Lost password" on page 54.
Country	Select the country name of **U.S.A.** or **Canada** for the appropriate ratings. The rating system varies between these two countries. See Custom Rating System Chart on page 46.

(Continued)

Rating	**Off**	Turns off **Parental Lock**. No programs are blocked from viewing based on their ratings.
	Child	Maximum ratings permitted are: U.S.: TV-Y, TV-G, G Canada: C, G, TV-Y
	Youth	Maximum ratings permitted are: U.S.: TV-PG, PG Canada: C8+, PG, 8 ans+, TV-PG
	Young Adult	Maximum ratings permitted are: U.S.: TV-14, PG-13 Canada: 14+, 13 ans+, TV-14
	Custom	Sets ratings manually. U.S.: See page 46 for details. Canada: See page 47 for details.

✍

• If you are not familiar with the parental guideline rating system, you should select **Child**, **Youth**, or **Young Adult** to help simplify the rating selection. To set more specific ratings, select **Custom**.

Digital Rating *(Available only in U.S.A. where advanced ratings exist)*	**Off**	Turns off **Digital Rating**. No programs containing digital ratings are blocked from viewing.
	Clear All	Clears the downloaded ratings.
	Custom	Customizes **Parental Lock** with downloadable digital ratings.
Unrated *(Available only when **Country** is set to **U.S.A.**)*	**Allow**	Allows programs and movies that are broadcast without a rating.
	Block	Blocks all programs and movies that are broadcast without a rating. ✍ • If you block unrated TV programs, be aware that the following types of programs may be blocked: programs broadcast from another country, emergency broadcasts, political programs, sports, news, public service announcements, religious programs and weather.
Channel Block	Allows you to block channels regardless of program ratings. The password needs to be set up prior to blocking channels. The blocked channel can only be viewed by entering the correct password. **To View a Blocked Channel** Press **ENT** when tuned to the blocked channel then enter the password.	

Custom Rating System Chart

For **Country** selection of **U.S.A.**:

Movie Rating	**G**	All children and general audience
	PG	Parental guidance suggested
	PG-13	Parental guidance for children under 13
	R	Restricted viewing, parental guidance is suggested for ages under 17
	NC-17 and **X**	No one 17 or under allowed

TV Rating *Block programs by their rating, content or both*	Age-Based Ratings	
	TV-Y	All children
	TV-Y7	Directed to children age 7 and older
	TV-G	General audience
	TV-PG	Parental guidance suggested
	TV-14	Parents strongly cautioned
	TV-MA	Mature audience only
	Content-Based Ratings	
	FV	Fantasy violence
	D	Suggestive dialogue
	L	Strong language
	S	Sexual situations
	V	Violence
	✍ • To ensure maximum blocking capability, set the Age-Based Ratings.	

For **Country** selection of **Canada**:

English Rating	**C**	All children
	C8+	Children 8 years and older
	G	General programming
	PG	Parental guidance
	14+	Viewers 14 and older
	18+	Adult programming
French Rating	**G**	General programming
	8 ans+	Not recommended for young children
	13 ans+	Not recommended for ages under 13
	16 ans+	Not recommended for ages under 16
	18 ans+	Programming restricted to adults
U.S.A. Rating	See **TV Rating** under **U.S.A.** for details.	

External Inputs Settings

Label Inputs

You can label your inputs with the name of equipment you have connected.
To assign your own label or **Skip** the input:

1. Press ↑/↓ to highlight the video input (**Video 1**, **2**, **3**; **Component 1**, **2**; **HDMI 1**, **2**, **3**, **4**; **PC**), then press ⊕ to select the desired input.
2. Press ↑/↓ to highlight the display label you want to assign, then press ⊕.

✍
- You can select from the following labels for each input.
  Video 1, **2**, **3**; **Component 1**, **2**; **HDMI 1**, **2**, **3**, **4**: **–**, **DVD**, **Cable Box**, **Satellite**, **BD**, **VCR**, **Receiver, DVR**, **Game**, **Camcorder**, **PC, Skip**.
  PC: **–**, **Skip**.
- "**–**" indicates that no labels are assigned.

HDMI Settings

HDMI inputs of this TV will recognize and communicate with other Sony equipment equipped with HDMI Control.

HDMI Control	**On**/**Off** feature allows your TV to communicate with other equipment that supports HDMI Control.
Device Auto Power Off	Select **On** to have your connected HDMI Control equipment power off automatically when the TV is turned off. Select **Off** to disable this function.
TV Auto Power On	Select **On** to control your TV's power on from your connected HDMI Control equipment. Select **Off** to disable this function.
Device List	Displays a list of HDMI Control equipment connected to the TV.

General Settings

Language	Select the language of your choice from **English**, **Español** and **Français** to be used for displaying all the on-screen settings.
Info Banner	Displays the program name and the program information such as program title and program rating (if available from the broadcaster) when option is set to **On**. Select **Off** for minimal display information. Selecting **Off** will not completely disable the banner display. **Info Banner** also appears on the screen each time the channel is changed or **DISPLAY** on the remote control is pressed. ✍ • To see the rating information on the banner, **Info Banner** setting must be set to **On**.
Power Saving	Reduces the power consumption by adjusting the lamp brightness. This also enhances the black level.
Logo Illumination	Select to illuminate the Sony logo on the front panel of the TV. Select **On** or **Off**.
Display Position	When selected, the guide markers for the TV **Display Position** will appear at four corners of the screen. Adjust **Vertical** position and/or **Horizontal** position by pressing ↑/↓/←/→ buttons to evenly position the markers.
Cooling Mode	Select **High** to use the TV at an altitude of 5,000 feet (1,500 m) or higher.
Lamp Replacement	When the lamp nears the end of its life, a message will appear every time the TV is turned on. After the lamp is replaced, select this option then follow the steps on screen.

Initial Setup

If you have missed the **Initial Setup** when you first connected the TV or if you want to scan all receivable channels, you can run the **Initial Setup**. Follow the instructions on the screen. Settings such as picture and sound adjustments will not be affected by this **Initial Setup**.

✍

• **Favorites** list will be cleared each time you run the **Initial Setup**.

Replacing the Lamp

The projection lamp, like all lamps, will eventually lose brightness and functionality, which affects the overall performance of your TV. How long the lamp maintains its brightness will vary depending upon your usage and environmental conditions. To maintain the quality of your viewing experience, Sony recommends that you replace the lamp (1) after approximately 8,000 hours of use; (2) when the screen becomes dark or the color looks unusual; (3) when the LAMP LED on the front of the TV blinks; or (4) when the lamp replacement message appears on the TV screen.

WARNING

Electric appliances can cause fire or high temperature, resulting in injury or death. Be sure to follow the instructions below.

- ☐ Use a Sony XL-5200 replacement lamp (not supplied) for replacement. Use of any other lamp may damage the TV.
- ☐ Do not remove the lamp for any purpose other than replacement. Doing so may cause injury or fire.
- ☐ Do not put flammable materials and metal objects inside the lamp receptacle of the TV after removing the lamp. Doing so may cause fire or electrical shock. Do not touch the lamp receptacle once the lamp has been removed.
- ☐ When the lamp eventually burns out, you may hear a noticeable pop sound. This is normal and it is inherent to this type of lamp.
- ☐ In rare instances, the bulb may pop inside the lamp unit, but the lamp unit is designed to contain all of the broken glass pieces inside the lamp unit.
- ☐ This TV's lamp contains mercury and should be disposed of properly. Consult your local authorities regarding safe disposal. The material contained in this lamp is similar to those of a fluorescent lamp, so you should dispose of it in the same way.

How to Replace the Lamp

1 Turn off the power on the main unit. Wait several minutes, then unplug the power cord. (The cooling fan will continue to operate for about two minutes after turning the power off.)

2 Wait at least 30 minutes after unplugging the power cord to allow the lamp to cool down before replacing it. To avoid being burned, do not touch the lamp receptacle once the lamp has been removed.

3 Take the new lamp out of the box.
Do not touch the glass portion of the new lamp.

- Do not shake the lamp. Vibration can damage the lamp or shorten its life.
- Avoid touching the front glass of a new lamp or the glass of the lamp receptacle. This may reduce picture quality or lamp life.

4 Remove the outside lamp cover on the right side rear of the TV.
Turn the screw counterclockwise and release the two clamps as shown in the illustration below.

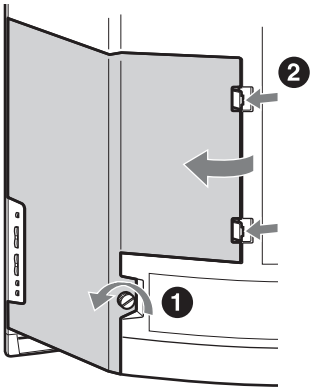

(Continued)

5 Remove the lamp door.
Push the lever up and pull out the door.

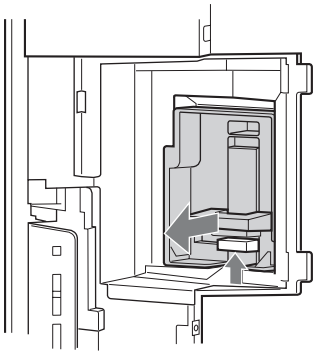

6 Pull the lamp out of the TV.
Hold the indented grooves as shown in the illustration, and pull the lamp straight out.

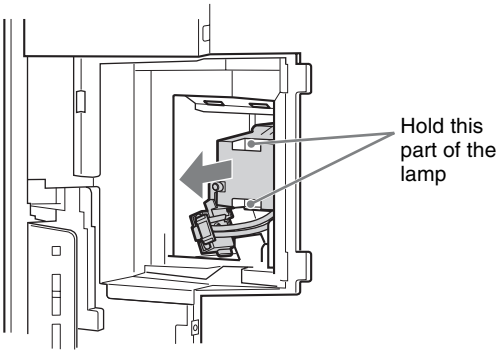

- The lamp is very hot immediately after use. Do not touch the inside of the lamp compartment, the glass portion of the lamp, or the surrounding parts.
- After the used lamp has cooled, place it into the empty box of the replacement lamp. Never put the used lamp into a plastic bag.

7 Slide the new lamp into its place.
Insert the new lamp by pressing the two parts firmly into place as shown in the illustration. Make sure the lamp is securely mounted into the compartment. Failure to do so may cause a fire or the screen to go dark.

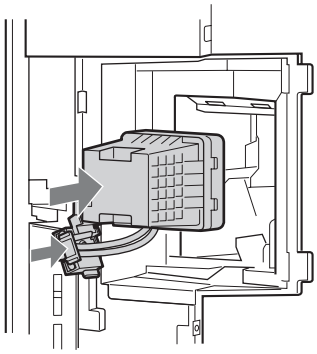

8 Reattach the lamp door.
Insert the two tabs on the top of the lamp door into the slots of the cabinet.

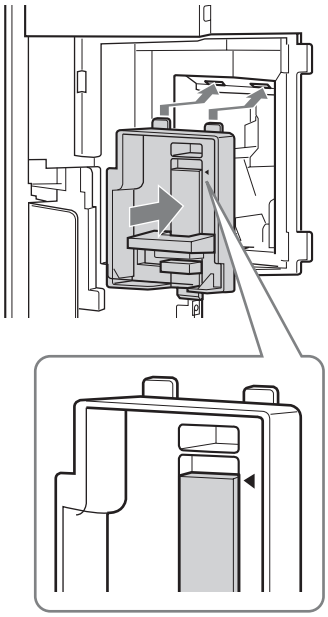

- Make sure the lever is raised to the corner of the triangle that points left as shown in the illustration.
- If the lamp is not securely reattached, the self-diagnostic function may be triggered and the POWER LED blinks six times (see page 28).

9 Put the outside lamp cover back in its place.
Replace the cover, inserting it from the left side. Press the two clamps on the right side to secure the cover and turn the screw clockwise.

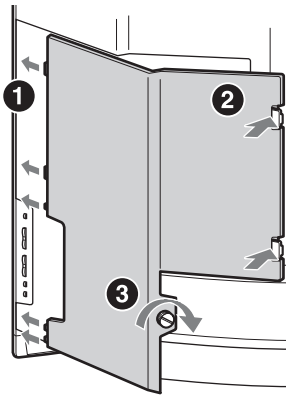

10 Plug in the power cord. Turn on the TV and set the **Lamp Replacement** option in the **General** settings (see page 48). This setting is necessary to inform you when the next lamp replacement is needed.

✍

- Until you set the **Lamp Replacement** option, a message announcing that the lamp is at the end of its life will appear every time you turn on the TV.
- Consult your Sony dealer for a Sony XL-5200 replacement lamp.
- Take great care when replacing the lamp or plugging in/unplugging the connecting cords. Rough handling may cause the TV to fall, damaging the TV, the TV stand and the floor.

The used lamp

For customers in the United States:

Lamp in this product contains mercury. Disposal of these materials may be regulated due to environmental considerations. For disposal or recycling information, please contact your local authorities or the Electronic Industries Alliance (http://www.eiae.org).

☐ Do not leave the used lamp near flammable materials or within the reach of children.

☐ Do not pour water onto the used lamp or put any object inside the lamp. Doing so may cause the lamp to burst.

For replacement lamp information visit:
U. S. residents:
http://www.sonystyle.com/tv/
Canadian residents:
http://www.sonystyle.ca/tv/

Troubleshooting

If you have questions, service needs, or require technical assistance related to the use of your Sony TV, please visit our website or call one of the following numbers:	http://www.sony.com/tvsupport 1-800-222-SONY(7669) for US Support 1-877-899-SONY(7669) for Canadian Support

Condition	Explanation/Solution
No picture	
Cannot receive any channels	• Make sure the power cord is connected securely. • Turn on the power of the TV. • Check antenna/cable connections. • Make sure the **Cable** setting is correct for your TV signal source. • The banner display will disappear when there is no RF input for a certain period of time. Press **DISPLAY** on the remote control to redisplay the banner.
TV is locked to one channel	• Perform **Auto Program** to add receivable channels that are not present in the TV's memory (see pages 22 and 44).
Cannot receive or select channels	• Perform **Auto Program** to add receivable channels that are not present in the TV's memory (see pages 22 and 44). • To receive or select cable channels, make sure that **Cable** in the **Channel** settings is set to **On** (see page 44). To receive or select UHF channels over an antenna, make sure **Cable** is set to **Off**.
The TV turns off automatically	• Check if **Sleep Timer** is activated, or confirm the **Duration** setting of **Timer** (see page 37).
No picture from some video sources	• Check the connection between the optional video equipment and the TV. • Press **INPUT** on the remote control (see page 27). • Press **HOME** on the remote control. Select your desired input from the **External Inputs** list. • The banner display will disappear when there is no video input for a certain period of time. Press **DISPLAY** on the remote control to redisplay the banner.
Poor picture	
The quality of the images is not as good as what I saw at the store	• Picture quality depends on the signal content. See Quick Setup Guide (supplied) to display the best possible picture for that signal.
Double images or ghosts	• Check antenna/cable connections. • Check the antenna location and direction.
Only snow and noise appear on the screen	• Check if the antenna is broken or bent. • Check if the antenna has reached the end of its serviceable life. (3-5 years in normal use, 1-2 years at the seaside.)
Dotted lines or stripes	• Keep the TV away from noise sources such as cars, motorcycles, or hair-dryers. • If using 300-ohm twin lead, move the excess lead away from the TV or try using a 75-ohm coaxial cable instead.
No color/Dark picture/Color is not correct/The picture is too bright	• Press **PICTURE** to select the desired **Picture Mode** (see page 27). • Adjust the **Picture Mode** options in the **Picture** settings (see page 37). • If you set **Power Saving** to **On**, it will enhance the black level (see page 48). • The picture becomes dark if **Motion Naturalizer** is set to **Mode 1**. Change the settings to **Mode 2** or **Off** (see page 42).
Noisy picture	• Make sure that the antenna is connected using a 75-ohm coaxial cable. • Keep the antenna cable away from other connecting cords. • To avoid TV interference, make sure to use an undamaged antenna cable.
The picture flickers	• When **Motion Naturalizer** is set to **Mode 1** or **Mode 2** for 1080/24p format, the picture flickers. This is a characteristic of **Motion Naturalizer** and not a malfunction (see page 42).

Condition	Explanation/Solution
No sound/Noisy sound	
Good picture, no sound	• Check the volume control. • Press **MUTING** or **VOL +** so that "Muting" disappears from the screen (see page 25). • Disconnect your headphones. • Set **Speakers** to **TV Speakers** in the **Audio Options** settings (see page 44). If it is set to **Audio System**, sound is not output from the TV's speakers regardless of the TV's volume control. • When using HDMI input with Super Audio CD or DVD-Audio, DIGITAL AUDIO OUT (Optical) may not provide an audio signal.
Audio noise	• Make sure that the antenna is connected using a 75-ohm coaxial cable. • Keep the antenna cable away from other connecting cords. • To avoid TV interference, make sure to use an undamaged antenna cable.
PC Input	
No Picture / No Signal	• Confirm the PC is correctly connected to the TV with either the PC IN (with an HD15-HD15 cable with ferrite core) or with the HDMI IN. • Ensure the output signal from the PC is one of the formats listed on page 19. • Turn the PC off. Confirm the PC connection and restart the PC. Plug and play will auto-detect the TV and correctly set up PC timing.
Poor Picture	• Adjust the resolution (see page 19). • Adjust **Pitch** and **Phase**.
General	
Wide Mode changes automatically	• The current **Wide Mode** setting is automatically replaced with the **4:3 Default** setting when you change the channel or video input, if **4:3 Default** in the **Screen** settings is set to other than **Off**. If you want to lock in **Wide Mode** selected with the **WIDE** button on the remote control, set **4:3 Default** to **Off** in the **Screen** settings (see page 40). • Check **Auto Wide** in the **Screen** settings (see page 40).
Picture Mode setting turns to **Vivid** automatically	• The **Store Display Mode** might be set to **On**. This will be deactivated if you run the **Auto Program** (see page 44).
"**Store Display Mode :On**" appears	• The **Store Display Mode** is set to **On**. This will be deactivated if you run the **Auto Program** (see page 44).
Suddenly the picture gets smaller	• The picture gets smaller during the commercials, this is due to the method the provider broadcasts their contents. When HD content channels switch to SD definition content (commercials), the picture may be small with a black border.
"Black box" on screen	• You have selected a text option and no text is available (see page 45). To turn off this feature, set **CC Display** to **Off**. If you were trying to select closed captioning, select **CC1** instead of **Text1-4**.
Black bands appear at the edges of the screen	• Some wide screen programs are filmed in aspect ratios that are greater than 16:9 (this is especially common with theatrical releases). Your TV will show these programs with black bands at the top and bottom of the screen. For more details, check the documentation that came with your DVD (or contact your program provider). • Programs in 4:3 aspect ratio will have bands on left and right sides of the screen.
Certain programs on DVD or other digital sources display a loss of detail, especially during fast-motion or dark scenes	• This is due to the digital compression of the source content used by certain digital broadcasts and DVDs which may cause your TV's screen to display less detail than usual, or cause artifacts (small blocks or dots, pixelations) to appear on your screen. These signal compressions are more visible and are dependent on the clarity and resolution of the television.
When playing a video game, there is delay between the remote control and the actual video	• Set the **Game/Text Mode** to **On** (see page 43).

(Continued)

Condition	Explanation/Solution
Remote control does not operate	• Check the polarity of the batteries or replace the batteries. • Point the remote control at the remote control sensor located at the center of the TV screen. • Fluorescent lamps can interfere with your remote control operation; try turning off the fluorescent lamps. • Keep the remote control sensor area clear from obstacles.
Cannot change channels with the remote control	• If you are using the TV to change channels, first press **TV (FUNCTION)** once, and the **TV** indicator lights up. • If you are using another device to change channels, be sure you have not inadvertently switched your TV from the channel 3 or 4 setting. • If you are using another device to change channels, be sure to press **FUNCTION** for that device. For example, if you are using your cable box to change channels, be sure to press **STB (FUNCTION)** once, and the **STB** indicator lights up.
Remote control does not operate non-Sony video equipment	• If you replaced the batteries to the remote control recently, the code numbers for the video equipment may need to be reset. • There may be more than one code for the equipment that you are attempting to operate. • There is a possibility that some non-Sony equipment cannot be operated by your Sony TV remote control. You may need to use the equipment's original remote control.
Some digital cable channels are not being displayed	• Certain cable companies have limitations on the broadcast of digital cable channels. Check with your cable company for more information. • The digital cable channel may be set to **Hidden** in the **Show/Hide Channels** setting (see page 44).
Lost password	• Select the **Password** settings on the **Parental Lock** settings, then enter the following master password: 4357. The master password clears your previous password and allows you to enter a new password (see page 45).
How to reset the TV to factory settings	• Turn on the TV. While holding down ↑ on the remote control, press **POWER** on the TV. (The TV will turn itself off, then back on again.) Release ↑. WARNING: The Reset will clear all of your customized settings including the **Parental Lock** setting.
LAMP LED blinks in red	• Replace the lamp (see page 49).
"Lamp Replacement message" appears	• It is time for you to replace the projection lamp used in you TV. • Turn to page 49 on "How to Replace the Lamp" and follow the directions on replacing the lamp. • Use only the lamp designated for your TV model. • After the lamp is replaced, select the **Lamp Replacement** option in the **General** settings.
The replacement lamp does not light up	• The lamp door or lamp might not be securely attached. Repeat the steps on page 49 to ensure that they are both installed securely.
The cooling fan is loud	• If the TV is used at high altitudes and the **Cooling Mode** is set to **High**, the cooling fan runs faster and its sound becomes louder. If the TV is not used at high altitudes, set **Cooling Mode** to **Auto** (see page 48).
"High Temperature Warning!" message appears / POWER LED blinks seven times in red	• Make sure to remove dust from the ventilation slots on the rear and both sides of the TV. In addition, make sure that there are no obstacles in front of the ventilation slots. If the message still appears after the dust or obstacles are removed, the TV may need servicing. Call your local Sony Service Center.
Image left on the screen (image retention)	• Turn off the TV for a while or let the TV run on another channel. Unlike plasma TV and CRT TV, image retention on this TV is not permanent. It is only a temporary condition (see page 12).

Condition	Explanation/Solution
Green tint or uneven color uniformity appears on the screen when the TV is powered on	• After turning on the TV, you may notice a green tint or slight variation in color and brightness in certain areas of the picture. This will last only a few minutes (possibly longer, in cooler rooms or conditions) while circuits within the TV continually fine tune the color during the warm-up period. This is a normal temperature characteristic of the components and not a malfunction.
White spot on the screen when powered off	• If screen is exposed to direct sunlight or strong ambient light, part of the screen may appear white even when TV is power off. This is due to the strong light reflecting off the TV screen and reflections coming from behind the screen. This is a structural property of the projection TV and is not a defect. • Position your TV away from such light sources.

Specifications

Model	KDS-Z60XBR5	KDS-Z70XBR5
System		
Projection system	3 SXRD panel, 1 lens projection system	
SXRD panel	High Frame Rate Compatible 0.61 Inch Panel Full HD SXRD Device	
Projection lens	High performance, large diameter hybrid lens	
Lamp	Ultra High Pressure Lamp, 120W, XL-5200	
Television system	NTSC: American TV standard ATSC (8VSB terrestrial): ATSC compliant 8VSB QAM on cable: ANSI/SCTE 07 2000 (Does not include CableCARD functionality)	
Channel coverage	Analog terrestrial: 2-69 / Digital terrestrial: 2-69 Analog Cable: 1-125 / Digital Cable: 1-135	
Speaker output	10 W + 10 W (Front), 15 W (Woofer)	
Input/Output jacks		
Antenna	75-ohm external terminal for VHF/UHF	
VIDEO IN 1/2/3	S VIDEO (4-pin mini DIN)(VIDEO 1 only): Y: 1.0 Vp-p, 75 ohms unbalanced, sync negative / C: 0.286 Vp-p (Burst signal), 75 ohms VIDEO: 1 Vp-p, 75 ohms unbalanced, sync negative AUDIO: 500 mVrms (100% modulation)/ Impedance: 47 kilohms	
COMPONENT IN 1/2	YPBPR (Component Video): Y: 1.0 Vp-p, 75 ohms unbalanced, sync negative / PB: 0.7 Vp-p, 75 ohms / PR: 0.7 Vp-p, 75 ohms / Signal format: 480i, 480p, 720p, 1080i, 1080p AUDIO: 500 mVrms (100% modulation)/ Impedance: 47 kilohms	
HDMI IN 1/2/3/4	HDMI: Video: 480i, 480p, 720p, 1080i, 1080p, 1080/24p / Audio: Two channel linear PCM 32, 44.1 and 48 kHz, 16, 20 and 24bits, Dolby Digital AUDIO (HDMI IN 1 only): 500 mVrms (100% modulation)/ Impedance: 47 kilohms	
AUDIO OUT	500 mVrms (100% modulation) (Fixed) / 1 Vrms at the maximum volume setting (Variable)	
PC IN	D-sub 15-pin, analog RGB, 0.7 Vp-p, 75 ohms, positive See the PC Input Signal Reference Chart on page 19.	
PC AUDIO INPUT	Stereo mini jack, 500 mVrms (100% modulation)/ Impedance: 47 kilohms	
DIGITAL AUDIO OUT (OPTICAL)	Optical Digital Audio Output (PCM/Dolby Digital)	
REMOTE	RS232C, D-sub 9-pin	
Power and others		
Power requirement	120 V AC, 60 Hz	
Power consumption		
in use	245 W	
in standby	All models less than 0.1 W	
Screen size (inches measured diagonally)	60	70
Speaker	Full Range: 40 × 100 mm (1 $^{5}/_{8}$ × 4 inches) (4) Tweeter: 40 mm (1 $^{5}/_{8}$ inches) (2) Woofer: 150 mm (5 $^{7}/_{8}$ inches) (1)	
Dimensions (W/H/D)	1505 × 969 × 332 mm 59 $^{3}/_{8}$ × 38 $^{1}/_{4}$ × 13 $^{1}/_{8}$ inches	1737 × 1094 × 371 mm 68 $^{1}/_{2}$ × 43 $^{1}/_{8}$ × 14 $^{5}/_{8}$ inches
Mass	97 kg 213 lb. 13 oz.	118 kg 259 lb. 18 oz.
Supplied accessories	Remote control RM-YD017 (1) / Size AA batteries (2) / Cable holders (2) + screws (2) / Support belt (1) / Securing screw (1) / Wood screw (1) / Operating Instructions (1) / Quick Setup Guide (1) / Warranty Card (1) / Online Registration Card (U.S.A. and Canada only) (1)	
Optional accessories	TV-Stand: SU-RS52U / Lamp: XL-5200	

- Optional accessories availability depends on its stock.
- Design and specifications are subject to change without notice.

Index

0-9 buttons 24
4:3 Default 41

A
Add Digital Channels 44
Advanced Iris 38
Advanced Settings 39
Analog CC 45
Audio Out 44
AUDIO OUT jack 15
Auto Adjust 41
Auto Program 22, 44
Auto Wide 40

B
Balance 39
Bass 39
BD, DVD or STB operating buttons 25
BD/DVD MENU button 25
BD/DVD TOP MENU button 25
Brightness 38

C
Cable 44
CC button 24
CC Display 45
CH +/– button 27
Channel Block 46
CineMotion 42
Color 38
Color Matrix 43
Color Temperature 38
COMPONENT IN jack (1080p/1080i/720p/480p/480i) 15
Connecting the TV 17
Contact Sony 37
Cooling Mode 48
Country 45
Current Time 37

D
Device Auto Power Off 48
Device List 48
DIGITAL AUDIO OUT (OPTICAL) jack 16
Digital CC 45
Digital Rating 46
Display Area 41
DISPLAY button 23
Display Options 45
Display Position 48
DMe^{x} button 24
DMe^{x}/SERVICE 16
DRC Mode 38
DRC Palette 39
DVR/VCR record buttons 25

E
Edit Channel Labels 45
English Rating 47
ENT button 24

F
F1/F2 button 27
FAVORITES button 24
FREEZE button 24
French Rating 47
FUNCTION buttons 23

G
Game/Text Mode 43

H
H Center 41
HDMI Control 21, 48
HDMI IN jack 15
HOME button 27
Hue 38

I
Info Banner 48
Infrared Receiver (IR) 28
INPUT button 27

J
JUMP button 26

L
Label Inputs 47
LAMP LED 28
Lamp Replacement 48
Lamp, replacing 49–51
Language 48
LIGHT button 23
Logo Illumination 48

M
Motion Enhancer 42
Motion Naturalizer 42
Movie Rating 46
MPEG Noise Reduction 38
MTS 43
MUTING button 25

N
Noise Reduction 38

O
OPTIONS button 27

P
Password 45
PC IN jack 15
Phase 41
Photo Color Space 43
Picture 38
PICTURE button 27
Picture Mode 37
PIP 34
Pitch 41
POWER button 25
POWER LED 28
Power Saving 48

R
Rating 46
Remote control programming 29–30
Reset 38, 39, 41, 54
RETURN button 24
RGB Dynamic Range 43

S
S VIDEO jack 15
Screen Position 41
Setting up channels 22
Settings
- Audio Options 43
- Channel 44
- Clock/Timers 37
- Closed Captions (CC) 45
- External Inputs 47
- General 48
- HDMI Settings 48
- Initial Setup 48
- Parental Lock 45
- Picture 37
- Product Support 37
- Screen 40
- Sound 39
- Video Options 42

Sharpness 38
Show/Hide Channels 44
Signal Diagnostics 37
SLEEP button 25
Sleep Timer 37
Sound Booster 40
SOUND button 24
Sound Mode 39
Speaker 28
Speakers 44
Steady Sound 40
Surround 40

T
THEATER button 25
Timer 37
TIMER LED 28
Treble 39
Troubleshooting 52–55
TV Auto Power On 48
TV POWER button 25
TV Rating 47

U
U.S.A. Rating 47
Unrated 46
Using with remote control
- 5.1ch DVD AV System 32
- AV Receiver 32
- Blu-ray Disc Player 31
- Cable Box 31
- DVD Player or DVD Changer 31
- DVD/VCR Combo Unit 32
- DVR 32
- HDD/DVD Combo Unit 32
- Satellite Receiver 31
- VCR 31

(Continued)

V

V Center 41
Vertical Size 41
VHF/UHF/CABLE input 15
Video Color Space (x.v.Color) 43
VIDEO/AUDIO (L/R) jacks 15
Video/Photo Optimizer 43
Voice Zoom 40
VOL +/– button 25
Volume Offset 40

W

WIDE button 26
Wide Mode 40, 42
Woofer Level 44

X

XMB™ 9, 35