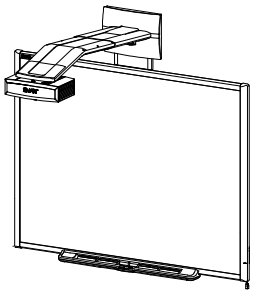

SMART Board™ 600i3 and SBD600i3 Interactive Whiteboard System

Configuration and User's Guide

Extraordinary made simple™ | SMART™

Product Registration

If you register your SMART product, we'll notify you of new features and software upgrades.

Register online at www.smarttech.com/registration.

Keep the following information available in case you need to contact SMART Technical Support.

Serial Number: _____

Date of Purchase: _____

FCC Warning
This equipment has been tested and found to comply with the limits for a Class A digital device, pursuant to Part 15 of the FCC Rules. These limits are designed to provide reasonable protection against harmful interference when the equipment is operated in a commercial environment. This equipment generates, uses and can radiate radio frequency energy and, if not installed and used in accordance with the manufacturer's instructions, may cause harmful interference to radio communications. Operation of this equipment in a residential area is likely to cause harmful interference in which case the user will be required to correct the interference at his own expense.

Trademark Notice
SMART Board, GoWire, the SMART logo and smarttech are trademarks or registered trademarks of SMART Technologies ULC in the U.S. and/or other countries. Bluetooth is a trademark owned by Bluetooth SIG, Inc. and is used by SMART Technologies ULC under license. Sanford, EXPO and EXPO2 are registered U.S. trademarks of SANFORD or its Affiliates. All other third-party product and company names may be trademarks of their respective owners.

Copyright Notice
©2009 SMART Technologies ULC. All rights reserved. No part of this publication may be reproduced, transmitted, transcribed, stored in a retrieval system or translated into any language in any form by any means without the prior written consent of SMART Technologies ULC. Information in this manual is subject to change without notice and does not represent a commitment on the part of SMART.

Patent No. US5448263; US6141000; US6320597; US6326954; US6337681; US6540366; US6741267; US6747636; US7151533; US7289113; US7499033; CA2058219; and CA2252302. Other patents pending.

10/2009

Introduction

Important Information

Read This Section First

Before you install and use your SMART Board™ 600i3 or SBD600i3 interactive whiteboard system, read and understand the safety warnings and precautions in this user's guide, your projector user's guide and the included warnings document. These safety warnings and precautions describe the safe and correct operation of your interactive whiteboard system and its accessories, helping you to prevent injuries and equipment damage. You must always ensure that your interactive whiteboard system is being used correctly.

NOTE

If you own a SMART product other than a SMART Board 600i3 or SBD600i3 interactive whiteboard system, refer to the installation guide for your product for relevant warnings and maintenance instructions.

In this document, "SMART Board 600i3 interactive whiteboard system" or "SMART Board SBD600i3 interactive whiteboard system" refers to your SMART Board 600 or SBD600 series interactive whiteboard and its UF55/UF55w projector, accessories and optional equipment.

The UF55/UF55w projector included with your system is designed to work only with certain SMART Board interactive whiteboard models. Contact your authorized SMART reseller for more information.

Safety Warnings, Cautions and Important Information

WARNINGS – GENERAL

- Failure to follow the installation instructions included with your interactive whiteboard, or found in this guide, could result in personal injury or product damage.
- Two people are required to safely mount the projector boom and the interactive whiteboard on a wall because the items might be too heavy for one person to maneuver onto their wall-mounting brackets.
- Do not leave cables on the floor where they can be a tripping hazard. If you must run a cable over the floor, lay it in a flat, straight line and secure it to the floor with tape or a cable management strip of a contrasting color. Handle cables carefully and avoid excessive bending.
- To reduce the risk of fire or electric shock, do not expose any component of your SMART Board interactive whiteboard system to rain or moisture.
- When mounting the projector boom on a framed wall, you must attach both the mounting bracket and safety tether to a stud to safely support the projector's weight. If you use only drywall anchors, the drywall can fail, resulting in product damage and possible personal injury.
- If you remove the bolt supporting the limit strap, the projector's boom will be free to swing. Make sure that the bolt is tightened, and never remove it from the unit without supporting the projector boom first.
- Do not climb (or allow children to climb) on any part of your wall-mounted SMART Board interactive whiteboard system. Climbing on your interactive whiteboard or the UF55/UF55w projector's boom could result in personal injury or product damage. Do not climb on, hang from or suspend objects from the projector's boom.

- Cleaning a boom-mounted projector may result in a fall or injury.

WARNINGS – PROJECTOR

- Refer to the safety warnings and precautions published in the UF55/UF55w projector manual.
- Do not stare (or allow children to stare) directly into your projector's beam of light. Instruct children not to look in the direction of this beam of light. Encourage users to keep their back to the projector when working at the interactive whiteboard. Before they turn to face the audience, users should step sideways, out of the projector's beam.
- Do not attempt to service the projector other than performing routine lamp replacement. Other than the lamp module, there are no user-serviceable parts inside the unit.
- This projector detects its own remaining lamp life. Replace the lamp when a lamp life warning message appears. If you continue to use the projector after the replacement message appears, the lamp might shatter or burst, scattering glass throughout the projector head.
- If the lamp has shattered or burst:
  - Call your authorized SMART reseller for instructions. Do not attempt to replace the lamp.
  - Do not touch the glass fragments because they might cause injury.
  - Leave and then ventilate the area where the lamp shattered or burst.
  - Wash your hands thoroughly if you have come in contact with lamp debris.
  - Thoroughly clean the area around the projector, and then discard any edible items placed in that area because they might be contaminated.
- You must remove the projector from the projector's boom before servicing the lamp.
  - Two people are required to remove and replace the projector.
  - Replacing the lamp in a boom-mounted projector might result in a fall or injury.
  - Uncovering the lamp while the projector is mounted on the boom might lead to product damage or personal injury from falling pieces of glass if the lamp is broken.

- When replacing the projector lamp:
  - Turn the projector off and wait 30 minutes for the lamp to cool completely before removing the projector from the boom.
  - Do not remove any screws other than those specified in the lamp replacement instructions.
  - Wear protective eyewear while changing the lamp. Failure to do so can cause injury or loss of eyesight if the lamp shatters or bursts.
  - Use only replacement lamps approved by SMART Technologies. Contact your authorized SMART reseller for replacement parts.
  - Never replace the lamp assembly with a previously-used lamp assembly.
  - To prevent premature lamp failure or exposure to mercury, always handle the fragile lamp assembly with care. Use gloves when touching the lamp. Do not touch the lamp with your fingers.
  - Recycle or dispose of the lamp module as hazardous waste, in accordance with local regulations.
- When returning the projector to the boom, replace all of the screws that you removed when you removed the projector. Failure to do so can result in the projector falling from the boom, causing injury or equipment damage.
- To reduce the risk associated with a leaking battery in your projector's remote control:
  - Use only the specified coin-cell type battery.
  - Orient the battery's plus (+) and minus (-) terminal according to the markings on the remote control.
  - Remove the battery when the remote control is unused for an extended period.
  - Do not heat, disassemble, short or recharge the battery, or expose it to fire or high temperatures.
  - Avoid eye and skin contact if the battery has a leak.
  - Dispose of the exhausted battery and product components in accordance with applicable regulations.

CAUTIONS

- Do not operate this unit immediately after moving it from a cold location to a warm location. When the unit is exposed to such a change in temperature, moisture could condense on the lens and crucial internal parts. Allow the system to reach room temperature before operation to prevent possible damage to the unit.
- Do not place the unit in hot locations, such as near heating equipment. Doing so could cause a malfunction and shorten the life of the projector.
- Make sure that an electrical socket is near to your SMART product and remains easily accessible during use.
- Do not add any extra weight or apply pressure to the UF55/UF55w projector boom, the wall-mounted interactive whiteboard or its pen tray. SMART designed the brackets to support only the weight of the components during normal use.
- For operating safety and to prevent damage to your interactive whiteboard, connect the included USB cable only to a computer that has a USB compliant interface and that bears the USB logo. In addition, the USB source computer must be compliant with CSA/UL/EN 60950 and bear the CE mark and CSA and/or UL Mark(s) for CAS/UL 60950.
- Do not connect your serial cable directly to the projector’s RS-232 serial interface. Use the extended control panel’s (ECP’s) RS-232 serial interface only.
- In a location over 6000' (1829 m) altitude, the air is thin and cooling efficiency is reduced, so use the projector with the fan mode set to High.
- Do not block the projector’s ventilation slots and openings.
- Avoid turning off the projector during the lamp ignition phase since this may lead to premature lamp failure. Keep the projector lamp on for a minimum of 15 minutes before turning it off to preserve the lamp life.
- Cycling power to the projector repeatedly can lock or damage your interactive whiteboard system. After you turn off the system, wait at least 15 minutes for cooling before starting the system again.
- Before you clean the UF55/UF55w projector, press the power button twice on the ECP or remote to put the system into Idle mode, and then allow the bulb to cool for 30 minutes.
- Do not allow liquids or commercial solvents of any kind to flow into the projector base or head. Do not use spray cleaners or solvents near any part of the projector since they may damage or stain the unit.

IMPORTANT

- Use the instructions that are in the UF55/UF55w projector boxes to install your system. Do not use the instructions in your SMART Board interactive whiteboard product box.
- Do not set up or use your interactive whiteboard system in an area with excessive levels of dust, dirt, humidity or smoke.
- Do not place your interactive whiteboard system near any appliance that generates a strong magnetic field.
- Do not place your interactive whiteboard system in direct sunlight.
- The screws that secure your interactive whiteboard to the wall are located directly behind the pen tray. The pen tray must be removed before you can remove your interactive whiteboard. When you secure the pen tray, you also secure your interactive whiteboard.
- Using the UF55/UF55w projector system near a TV or radio may cause interference to the images or sound. If this happens, move the TV or radio away from the projector.
- Your SMART Board 600i3 or SBD600i3 interactive whiteboard system does not include speakers. To play audio, connect an audio system to the projector's audio output. Consult your authorized SMART reseller to determine your audio output options.
- If you have peripheral devices that do not use a 4-pin mini-DIN connector or an RCA composite video jack, or if your device has an audio connection that does not use RCA jacks, you may need to purchase third-party adapters.
- When cleaning your interactive whiteboard system:
  - Wipe the exterior of the projector using a lint-free cloth.
  - If necessary, use a soft cloth moistened with a mild detergent to clean the projector housing.
  - Do not use abrasive cleaners, waxes or solvents.
- Disconnect the product from its power source when it's not used for a long period.
- If your interactive whiteboard system requires replacement parts, make sure that the service technician uses replacement parts specified by SMART Technologies, or parts with the same characteristics as the original.

Contents

Important Information i

Read This Section First i

Safety Warnings, Cautions and Important Information ii

1 About Your SMART Board 600i3 or SBD600i3 Interactive Whiteboard System ... 1

SMART Board 600i3 or SBD600i3 Interactive Whiteboard System Features 2

Interactive Whiteboard Features 3

UF55/UF55w Projector System Features 3

ECP and Cable 4

Standard Accessories 5

Remote Control 5

Pen Tray Tools 5

Eraser 5

Optional Accessories 6

SMART Board Audio (SBA) USB Speakers 6

Wireless Bluetooth Connection (WC6) 6

Active USB Extension Cables (USB-XT) 6

Cat 5 to USB Cable Extender (CAT5-XT) 6

Serial Conversion Module (RS-232) 6

GoWire SMART Notebook Software Auto-launch Cable (USB-GW) 7

2 Installing Your SMART Board 600i3 or SBD600i3 Interactive Whiteboard System 9

Environmental Requirements 10

Before Installing Your SMART Board 600i3 or SBD600i3 Interactive Whiteboard System 12

Recommended Mounting Heights 12

After Installing Your SMART Board 600i3 or SBD600i3 Interactive Whiteboard System 13

Adjusting Keystone Alignment 13

Focusing the Image 14

Performing an Image Alignment 15

Securing the Pen Tray and Interactive Whiteboard 19

3 Connecting Your SMART Board 600i3 or SBD600i3 Interactive Whiteboard System 21

Installing SMART Software 22

Connecting the Cables to the UF55/UF55w Projector 23

Routing the Cables 23

Connecting Your Guest Computer to the ECP's Inputs 27

Connecting Peripheral Visual or Audio-Visual Devices 28

4 Using Your SMART Board 600i3 or SBD600i3 Interactive Whiteboard System . 29

Turning the System On and Off and Selecting an Input 30

Using Your Interactive Whiteboard 30

Using Your UF55/UF55w Projector 31

Using Your Remote Control 31

Menu Options 31

5 Remotely Managing Your SMART Board 600i3 or SBD600i3 Interactive Whiteboard System 35

Connecting Your Room Control System to the ECP 36

Pin Configuration on the ECP RS-232 Connector 36

Serial Interface Settings 36

UF55/UF55w Programming Commands 38

Powerstate Controls 38

Command Inventory 38

Powerstate Control 40

Source Selection 41

Video Control 41

Audio Control 42
Network Information 43
System Information 44

6 Troubleshooting Your SMART Board 600i3 or SBD600i3 Interactive Whiteboard System 45
System Warning Lights 46
ECP Ready Light and System Status 46
Projector Ready Lights and Projector Status 46
Errors 47
Temperature Exceeded 47
Fan Failure 47
Color Wheel Failure 48
Lamp Failure 48
Ready Light Isn't Lit 48
Interactive Whiteboard Indicators and Controls 49

7 Maintaining Your SMART Board 600i3 or SBD600i3 Interactive Whiteboard System 51
Preventing Damage to Your Interactive Whiteboard 52
Keeping the Writing Surface Clean 52
Removing Permanent Marker Ink Stains 53
Cleaning the Pen Tray 53
Cleaning the UF55/UF55w Projector 54
Cleaning the Projector 54
Transporting Your SMART Board 600i3 or SBD600i3 Interactive Whiteboard System 55
Contacting SMART Technical Support 55
Locating Your Projector Serial Number 55

8 Replacing Your UF55/UF55w Projector Lamp 57
Replacing the Projector Lamp 57
Removing the Projector from the Boom 59

Replacing the Projector Lamp Module 61
Replacing the Projector 63
Resetting the Lamp Timer 64

A Customer Support 65
Online Information and Support 65
Training 65
Technical Support 65
Shipping and Repair Status 65
General Inquiries 66
Warranty 66
Registration 66

B Hardware Environmental Compliance 67
Waste Electrical and Electronic Equipment Regulations (WEEE Directive) . 67
Restriction of Certain Hazardous Substances (RoHS Directive) 67
Batteries 67
Packaging 68
Covered Electronics Devices 68
China's Electronic Information Products Regulations 68
U.S. Consumer Product Safety Improvement Act 68

Index 69

Chapter 1

About Your SMART Board 600i3 or SBD600i3 Interactive Whiteboard System

Your SMART Board 600i3 or SBD600i3 interactive whiteboard system combines the UF55/UF55w wall-mounted, short-throw projector system with a SMART Board 600 or SBD600 series interactive whiteboard.

Refer to these topics to learn more about the features and accessories that you can use with your SMART Board 600i3 or SBD600i3 interactive whiteboard system.

SMART Board 600i3 or SBD600i3 Interactive Whiteboard System Features 2

Interactive Whiteboard Features 2

UF55/UF55w Projector System Features..... 3

ECP and Cable 4

Standard Accessories..... 5

Remote Control 5

Pen Tray Tools 5

Eraser..... 5

Optional Accessories 6

SMART Board Audio (SBA) USB Speakers..... 6

Wireless Bluetooth Connection (WC6)..... 6

Active USB Extension Cables (USB-XT)..... 6

Cat 5 to USB Cable Extender (CAT5-XT) 6

Serial Conversion Module (RS-232)..... 6

GoWire SMART Notebook Software Auto-launch Cable (USB-GW) 7

SMART Board 600i3 or SBD600i3 Interactive Whiteboard System Features

Your SMART Board 600i3 or SBD600i3 interactive whiteboard system uses the UF55/UF55w short-throw, high-offset projector. Although the projector's basic operation is the same as in earlier models, SMART made many improvements to make the SMART Board 600i3 or SBD600i3 interactive whiteboard system easier to install, use, service and upgrade.

When the UF55/UF55w projector displays an image from your computer on the touch-sensitive interactive whiteboard, you can do everything that you can do at your computer—open and close applications, scroll through files, conference with others, create new documents or edit existing ones, visit websites, play video clips and more—by touching the screen. This projector also supports video and audio connections from a variety of devices, including DVD players, VCRs, document cameras and digital cameras, and can project media from these sources onto the interactive screen.

When you use SMART Notebook software with your SMART Board 600i3 or SBD600i3 interactive whiteboard system, you can write or draw over the projected computer image in digital ink using a pen tray pen or your finger, and then save these notes to a SMART Notebook file, or directly into any Ink Aware application.

Interactive Whiteboard Features

Your SMART Board 600 or SBD600 series interactive whiteboard includes many features of earlier SMART Board interactive whiteboards, such as a resistive touch screen and a pen tray. The SMART Board 600 or SBD600 series performs best with the UF55/UF55w projector because of its exceptional color performance and input response.

Other features of your interactive whiteboard include:

- A pen tray that automatically detects which tool you've selected when you pick up a pen or the eraser from the pen tray
- Pen tray buttons that activate the on-screen keyboard, right-click and help functions
- A durable hard-coated surface that's tear-proof, optimized for projection, compatible with dry-erase markers, and easily cleaned with whiteboard cleaner
- A standard USB interface to connect your SMART Board interactive whiteboard to the host computer
- A security cable lock feature that enables you to lock your interactive whiteboard to help safeguard it from theft

UF55/UF55w Projector System Features

The UF55/UF55w projector system includes a short-throw projector for use with SMART Board 600 or SBD600 series interactive whiteboards, an extended control panel (ECP) and a sturdy support system for classroom environments.

The features of the projector system include:

- A wall-mounted, high-offset SBP-10X (for the XGA or UF55) and SBP-20W (for the WXGA or UF55w) projector engine that uses DLP® technology by Texas Instruments™, providing BrilliantColor™ performance and quality Gamma 2.2 correction with High Brightness, Standard and True Color modes
- A safety-oriented design that includes a boom support with a controlled-collapse feature
- PAL, PAL-N, PAL-M, SECAM, NTSC, NTSC 4.43 video system compatibility
- Composite, S-video, and VESA RGB with additional interface support for Component YPbPr and Component YCbCr inputs with proper adapters (not included)
- WXGA, QVGA, VGA, SVGA, XGA, SXGA, SXGA+ and UXGA video format compatibility
- 1024 × 768 native resolution (UF55)

  OR

  1280 × 800 native resolution (UF55w)
- Serial RS-232 interface on the ECP for connecting a room control system
- Self-protection timer for a hot re-strike of the projector lamp

- Protected cable routing through the projector housing and a cable cover to prevent tampering and clutter
- A secure mounting and installation system that includes:
  - A projector padlock loop
  - Mounting hardware for solid masonry or framed wall installations
  - Templates and instructions for positioning the system in a safe manner

ECP and Cable

Your interactive whiteboard system's ECP features connectors for three inputs and control for four inputs, including the direct HD-DB15 RGB connection to the projector.

Direct inputs supported include:

- A single HD-DB15 (RGB) input connector and associated audio (3.5 mm jack) for RGB or component video and HDTV sources (YPbPr/YCbCr with proper adaptors, not included)
- An S-video (4-pin mini-DIN) and associated audio (two RCA jacks)
- A composite video (RCA jack) and associated audio (two RCA jacks)

NOTE

A specialized harness cable provided by SMART enables output to the projector.

Standard Accessories

The following accessories are included with your SMART Board 600i3 or SBD600i3 interactive whiteboard system.

Remote Control

The remote control enables you to control the system and set up your UF55/UF55w projector. Use the remote control to access menu options, system information and input selection options.

Pen Tray Tools

The pen tray tools include four pens and an eraser. The pens have rubberized grip areas, colored to match four colors of digital ink: black, red, green and blue. You can use dry-erase markers instead of the included pens, as long as they're a similar shape, don't scratch or mark your interactive whiteboard's surface and reflect infrared light. You can use Sanford® EXPO® markers as substitutes.

NOTES

- If the substitute isn't reflective to infrared light, the pen tray sensors might not detect the presence of the pen.
- Some of SMART's older pens aren't designed to reflect infrared light and the pen tray sensors might not detect them reliably. Wrap light-colored tape around a substitute pen to improve the reflection of infrared light, helping with tool detection.
- Don't use low-odor dry-erase markers such as Sanford EXPO2, which can be very difficult to remove. Use standard dry-erase (high-odor) markers that show a warning to use them only in well-ventilated areas.

Eraser

The eraser resembles a rectangular chalkboard eraser. Again, you can use a substitute object, as long as it has a similar shape, doesn't scratch or mark your interactive whiteboard's surface and reflects infrared light.

Optional Accessories

For more information about these optional accessories, contact your authorized SMART reseller.

SMART Board Audio (SBA) USB Speakers

Your interactive whiteboard system requires an audio system to deliver presentations with sound. The SBA system consists of a pair of 15-watt, stereo-amplified speakers with a two-port USB hub and a volume control knob.

Wireless Bluetooth Connection (WC6)

This accessory eliminates the need for a USB cable between your computer and interactive whiteboard. The included 7V DC switching power supply provides power to the module and your interactive whiteboard.

NOTE

This option isn't available for Dual Touch models SBD680i3 or SBD685i3.

Active USB Extension Cables (USB-XT)

Connect up to four 16' (5 m) active USB extension cables to extend your interactive whiteboard's USB connection to a maximum of 64' (20 m).

Cat 5 to USB Cable Extender (CAT5-XT)

Use the SMART Cat 5 to USB cable extender to extend your interactive whiteboard's USB connection up to 120' (36.6 m) using RJ45 Cat 5 cable (not included). The extender includes two 6' (1.8 m) USB cables to connect your computer and interactive whiteboard to the extender units.

Serial Conversion Module (RS-232)

Use the RS-232 module to convert your interactive whiteboard's USB connection to a serial connection.

NOTE

This option isn't available for Dual Touch models SBD680i3 or SBD685i3.

GoWire SMART Notebook Software Auto-launch Cable (USB-GW)

The GoWire cable contains SMART Notebook software and launches it automatically on a guest computer, providing full access to all interactive whiteboard software tools without installing SMART Notebook.

Chapter 2

Installing Your SMART Board 600i3 or SBD600i3 Interactive Whiteboard System

Consult the SMART Board 600i3 or SBD600i3 interactive whiteboard system installation documents that came with your product for instructions on how to install your product and use the mounting template and the ECP.

IMPORTANT

Use the instructions included in the UF55/UF55w projector boxes to install your system. Do not use the instructions in your SMART Board interactive whiteboard's product box.

Refer to these topics for additional information, optional installation procedures and tips to consider before you install your SMART Board 600i3 or SBD600i3 interactive whiteboard system.

Environmental Requirements 10

Before Installing Your SMART Board 600i3 or SBD600i3 Interactive Whiteboard System 12

Recommended Mounting Heights 12

After Installing Your SMART Board 600i3 or SBD600i3 Interactive Whiteboard System 13

Adjusting Keystone Alignment 13

Focusing the Image 14

Performing an Image Alignment 15

Securing the Pen Tray and Interactive Whiteboard 19

Environmental Requirements

Before installing your SMART Board 600i3 or SBD600i3 interactive whiteboard system, review the following environmental requirements.

CAUTION

- Do not operate this unit immediately after moving it from a cold location to a warm location. When the unit is exposed to such a change in temperature, moisture could condense on the lens and crucial internal parts. Allow the system to stabilize to room temperature before operation to prevent possible damage to the unit.
- In a location over 6000' (1829 m) altitude, the air is thin and cooling efficiency is reduced, so use the projector with the fan mode set to High.
- Do not place the unit in hot locations, such as near heating equipment. Doing so could cause a malfunction and shorten the life of the projector.

IMPORTANT

Using the UF55/UF55w projector system near a TV or radio could cause interference to the images or sound. If this happens, move the TV or radio away from the projector.

Environmental Requirement	Parameter
Operating temperature	• 41°F to 95°F (5°C to 35°C) from 0' to 6000' (0 m to 1829 m) • 41°F to 86°F (5°C to 30°C) from 6000' to 9800' (1829 m to 2987 m)
Storage temperature	-40°F to 122°F (-40°C to 50°C)
Humidity	• 30 to 70% relative humidity, non-condensing • Humidity above 80% might cause slight wrinkling in the screen surface sheet. The wrinkles disappear when the humidity lowers.
Water and fluid resistance	• Intended for indoor use only. Doesn't meet any salt-spray or water ingress requirements. • Don't pour or spray liquids directly onto your interactive whiteboard, the UF55/UF55w projector or any of its sub-components. See page 52 for detailed instructions on cleaning your interactive whiteboard system.
Dust	• Intended for use in office and classroom environments. Not for industrial use where heavy dust and pollutants can cause malfunctions or impaired operation. • Designed for pollution degree 1 (P1) as per EN61558-1, which is defined as "No pollution or only dry non-conductive pollution".
Electrostatic discharge (ESD)	• EN61000-4-2 severity level 4 for direct and indirect ESD • No malfunction or damage up to 8kV (both polarities) with a 330 ohm, 150 pF probe (air discharge) • Unmated connectors meet no malfunction or damage up to 4kV (both polarities) for direct (contact) discharge
Cables	All SMART Board 600i3 or SBD600i3 interactive whiteboard system cables should be shielded to prevent potential accidents and degraded video and audio quality.
Conducted and radiated emissions	EN55022/CISPR 22, Class A

Before Installing Your SMART Board 600i3 or SBD600i3 Interactive Whiteboard System

Choose a location for your SMART Board 600i3 or SBD600i3 interactive whiteboard system that's far from bright light sources, such as windows or overhead lighting. Bright light sources can cause distracting shadows on your interactive whiteboard and can reduce the contrast of the projected image.

Select a wall with a flat, regular surface and minimum clearance to accommodate your SMART Board interactive whiteboard system. Make sure that the UF55/UF55w projector and your interactive whiteboard are installed on the same flat surface. For best presentation alignment, SMART recommends that you mount your interactive whiteboard system in a location that's central to your audience's viewing direction. For mobile installation or adjustable installation options, contact your authorized SMART reseller. If the mounting surface is slightly irregular or if you're unable to mount your interactive whiteboard system on a stud, see *Mounting SMART Board Interactive Whiteboard Systems and UF55 Projectors on a Back Board* (document 135075) on the SMART Technical Support website.

Recommended Mounting Heights

SMART includes a mounting template with each of its SMART Board 600i3 or SBD600i3 interactive whiteboard systems. If you lose this template, contact your authorized SMART reseller. Using this template ensures that you:

- Mount the UF55/UF55w projector at a safe height for head space clearance, while maintaining enough space for airflow and installation access above the unit.
- Position the projector at the correct height above your 600 or SBD600 series interactive whiteboard so that the projected image aligns with the touch screen.

Dimensions on the template recommend a distance from the floor that's suitable for adults of average height. Although you should consider the general height of your user community when you choose a position for your interactive whiteboard, consult your local regulations before mounting the unit.

WARNING

When mounting the projector on a framed wall, you must attach both the mounting bracket and safety tether to a stud to safely support the projector's weight. If you use only drywall anchors, the drywall can fail, resulting in product damage and possible personal injury.

If you remove the bolt supporting the limit strap, the projector boom will be free to swing. Make sure that the bolt is tightened, and never remove it from the unit without supporting the projector boom first.

After Installing Your SMART Board 600i3 or SBD600i3 Interactive Whiteboard System

Adjusting Keystone Alignment

Keystone errors occur when the projected image isn't perpendicular to the screen.

From the projector, the image path is shorter along the top.

From the projector, the image path is shorter along the bottom.

The image appears shorter across the top when the image path's distance from the projector to the top of the screen is shorter than the distance to the bottom of the screen. The image appears shorter across the bottom when the image path's distance from the projector to the bottom of the screen is shorter than the distance to the top of the screen. Vertical keystone errors can occur when you mount the UF55/UF55w projector and the SMART Board 600 or SBD600 series interactive whiteboard on an uneven surface or a wall that has obstructions.

Horizontal keystone errors can occur when you swivel the UF55/UF55w projector too far from your SMART Board 600 or SBD600 series interactive whiteboard's vertical center, when you mount the projector and the interactive whiteboard on an uneven surface, or when the interactive whiteboard is slightly closer to the projector on one side than the other.

From the projector, the image path is shorter along the right side.

From the projector, the image path is shorter along the left side.

The image appears shorter across the right side when the distance from the projector to the right side of the screen is shorter than the distance to the left side of the screen. The image appears shorter across the left side when the distance from the projector to the left side of the screen is shorter than the distance to the right side of the screen.

Adjust your interactive whiteboard side to side to center the image (from the projector), as illustrated in the installation document. This eliminates many keystone errors. If your installation environment prevents you from moving your interactive whiteboard, you can adjust the projector boom for optimal image alignment.

NOTES

- If you move your interactive whiteboard system to a new location, you must re-adjust it.
- If your projector requires service, you must adjust the replacement projector.

WARNING

Two people are required to safely mount the projector boom and the interactive whiteboard on a wall because the items might be too heavy for one person to maneuver onto the wall-mounting brackets.

Focusing the Image

NOTE

Ensure that you remove the plastic lens cover from the projector.

To focus the projected image, use the Focus Ring, located on the bottom of the UF55/UF55w projector (when the projector is facing downward).

To focus and adjust the image

Rotate the Focus Ring right or left until the image is clear.

Performing an Image Alignment

Use this procedure to obtain a rectangular image that's slightly smaller than your interactive whiteboard's screen.

NOTES

- Project a computer image (set to the proper resolution) while performing the following steps. If you don't have a computer, use the projector's default blue background so that you can see the fully projected image clearly.
- SMART doesn't recommend adjusting digital keystoning within the projector. Instead, use the mechanical adjustment described below.

To perform an initial image alignment

1. Align the top of the projected image so that it's parallel with the top edge of your interactive whiteboard's surface.
2. Loosen the large wingnut on the top of the ball joint to allow movement of the projector as needed.

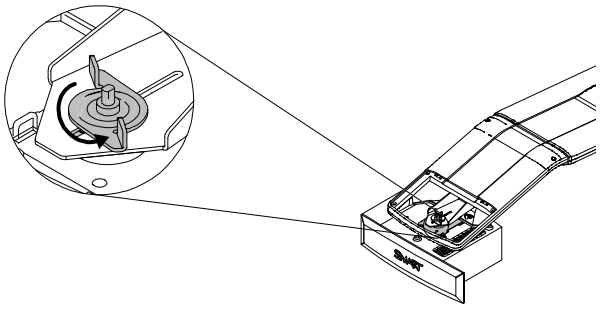

IMPORTANT

Do not loosen the wingnut too much or the projector will not hold the adjustments.

3. Tilt the projector left or right, up or down, or from side to side, until the top edge of the projector image is parallel with the top edge of your interactive whiteboard.

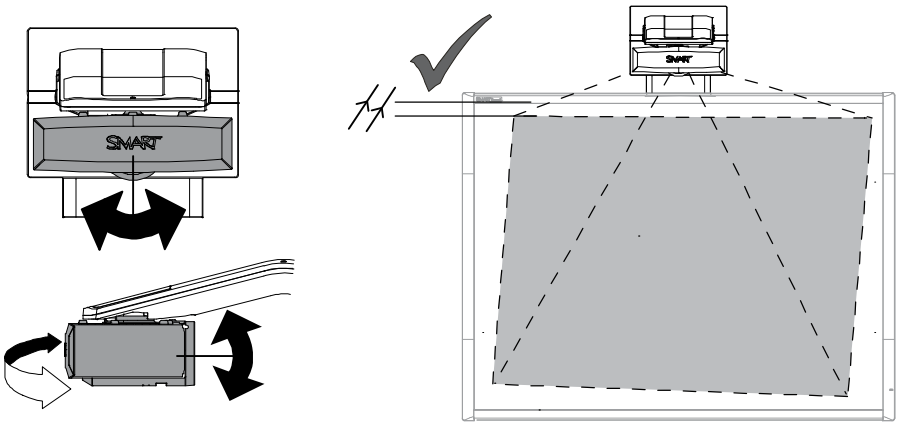

To adjust the projector alignment

1. If the bottom edge of the projected image is smaller than the top edge of the projected image, and the sides of the projected image slope inward toward the bottom of the projected image, tilt the projector down or raise the projector's mounting boom to lower the image. Turn the center hex screw at the base of the boom counter-clockwise using a 6 mm hex key (not included) to raise the boom.

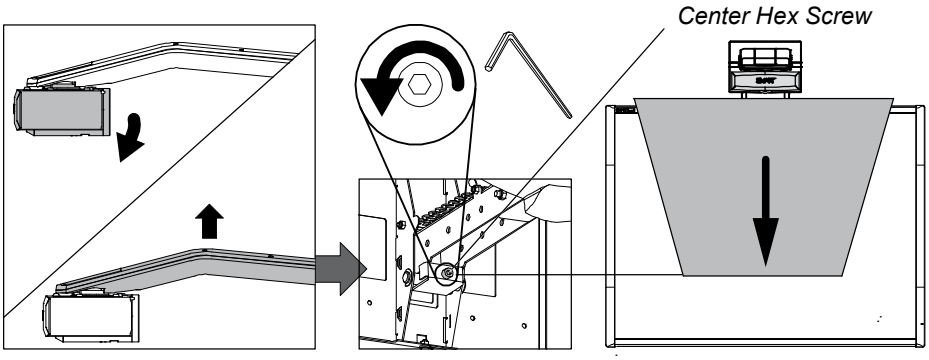

2. If the bottom edge of the projected image is larger than the top edge of the projected image, and the sides of the projected image slope outward toward the bottom of the projected image, tilt the projector up or lower the projector's mounting boom to raise the image. Turn the center hex screw at the base of the boom clockwise using a 6 mm hex key (not included) to lower the boom and tilt the projector forward and backward.

NOTE
The entire projected image may increase slightly in size during this process, and more at the bottom of the projected image than at the top.

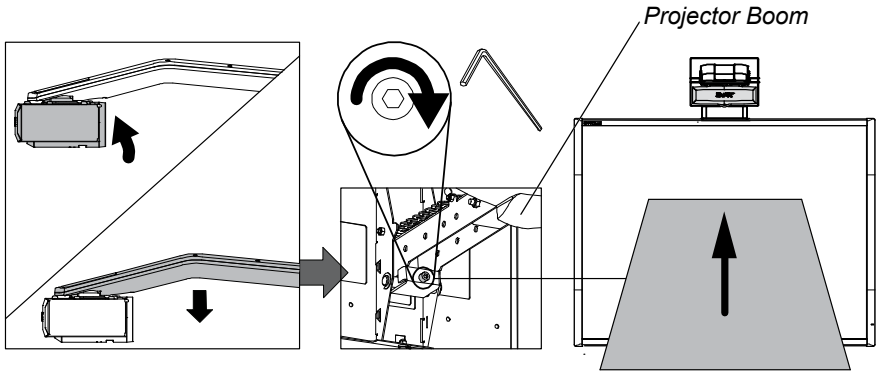

3. Adjust the projected image's horizontal alignment by turning the projector left or right, until the top and bottom edges of the projected image are horizontal and parallel.

   NOTE
   Don't pay attention to the position of the left and right edges relative to your interactive whiteboard during this step.

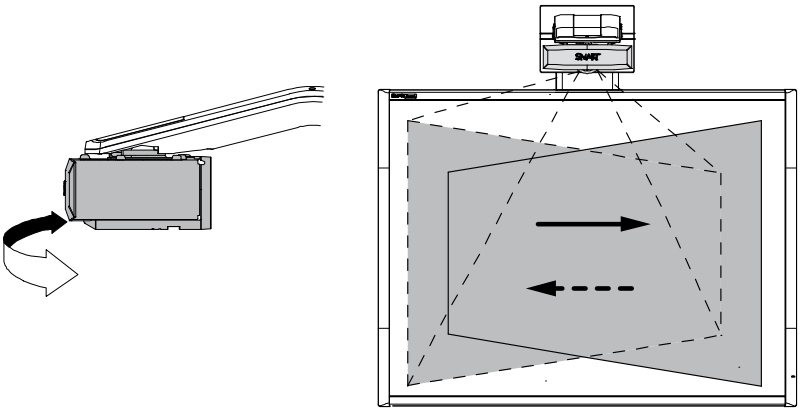

4. Move your SMART Board interactive whiteboard left or right on its mounting bracket to center the image on your interactive whiteboard.

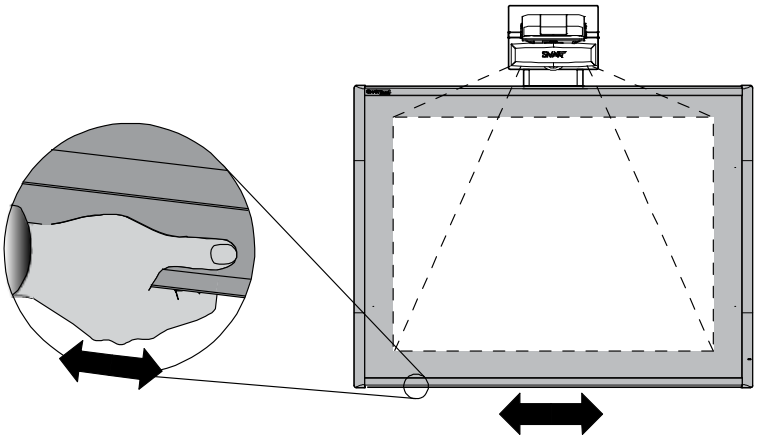

5. If you haven't already done so, loosen the large wingnut on the top of the ball joint to enable the projector to move backward and forward in the slot.

6. Move the projector forward or backward on the boom to make the image larger or smaller.

   NOTE
   During this step, you may need to tilt or turn the projector slightly to keep the image square.

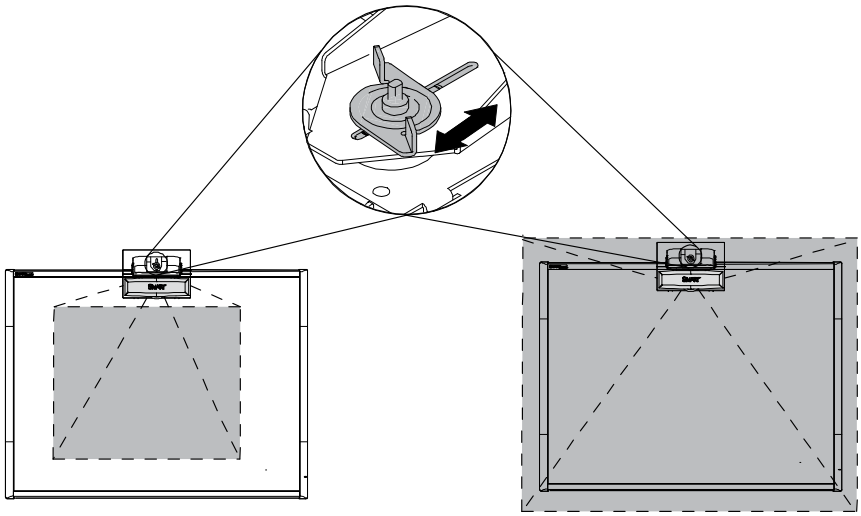

7. Focus the projector using the focus lever (located on the top of the projector).

   NOTE
   You may need to repeat all steps in smaller increments in order to fine-tune the image.

8. Tighten the large wingnut on the top of the ball joint.

Securing the Pen Tray and Interactive Whiteboard

Because your SMART Board interactive whiteboard's pen tray is detachable, you might want to safeguard it—and your interactive whiteboard—by anchoring it with a security cable.

IMPORTANT

Securing the pen tray can provide theft deterrence for your interactive whiteboard because the screws that secure your interactive whiteboard to the wall are located directly behind the pen tray, and must be removed to detach the pen tray. In effect, when you secure the pen tray, you're also securing your interactive whiteboard if the security cable is tight.

Underneath the pen tray, there is a security slot that accommodates a security cable, such as a Kensington® lock.

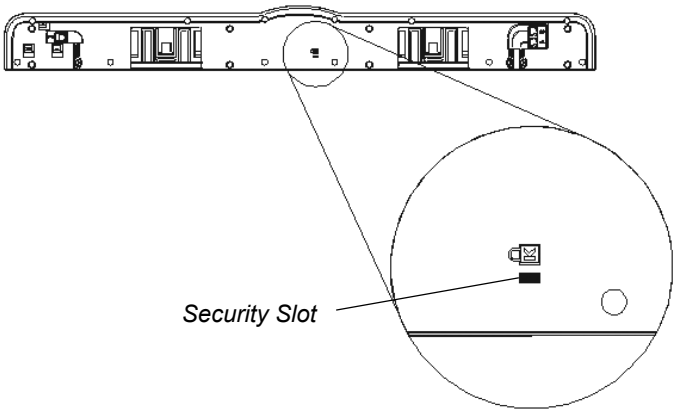

IMPORTANT

Be aware that security cable locks are not designed to be a solid protection measure because the lock can be torn out. However, potential thieves might be reluctant to try to sell a product with a broken security cable lock hole, which would readily identify it as a stolen item.

To lock the pen tray to your interactive whiteboard

1. Loop the security cable behind the pen tray brackets before you secure them to the wall, and then thread the lock end of the cable through the loop end of the cable.
2. Verify that the cable is tight enough to prevent you from removing the pen tray while the lock is in place, and then install the pen tray.
3. Insert the prong end of the security cable into the security slot, and then complete the pen tray installation by securing it to the wall.

Since you can remove the pen tray without tools, you might want to securely attach it to its brackets. To do this, insert two No. 8/M4 screws (not included) into the holes indicated in the following illustration.

NOTE

Older pen trays don't have this feature.

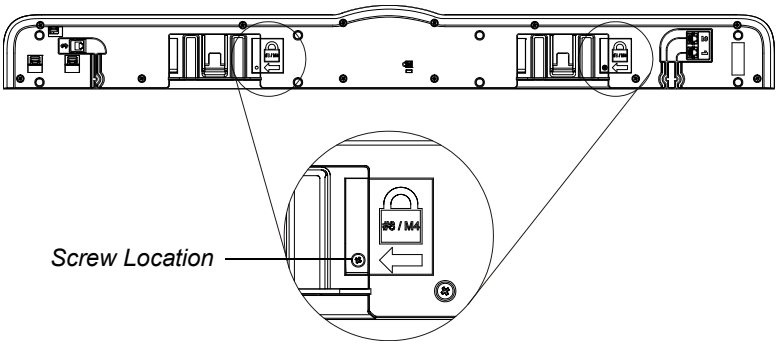

Chapter 3

Connecting Your SMART Board 600i3 or SBD600i3 Interactive Whiteboard System

Refer to these topics for software installation instructions, relevant precautions and methods for connecting new devices to your interactive whiteboard system.

Installing SMART Software 22

Connecting the Cables to the UF55/UF55w Projector 23

Routing the Cables 23

Connecting Your Guest Computer to the ECP's Inputs 27

Connecting Peripheral Visual or Audio-Visual Devices 28

NOTES

- To connect your SMART Board 600 or SBD600 series interactive whiteboard, see the *SMART Board 600 and SBD600 Series Interactive Whiteboard Installation and User's Guide* (document 1414).
- To connect accessories to your SMART Board interactive whiteboard, refer to the documents included with the accessories and consult the SMART Support website for additional instructions.
- When connecting both a guest computer and a host computer to your interactive whiteboard system, make sure that the computer used for the presentation is connected to your SMART Board interactive whiteboard's USB cable connector.

Installing SMART Software

When you connect a computer with SMART product drivers and SMART Notebook software to your system, you can control your computer from your interactive whiteboard's screen, write in digital ink over your projected desktop or directly into any Ink Aware application, and then save your notes to a SMART Notebook file. You can also connect the video output of a hardware device, such as a VCR or DVD player, to your interactive whiteboard system's ECP to display the video signal on your system.

Refer to the included installation document to initially set up and connect your SMART Board 600i3 or SBD600i3 interactive whiteboard system.

Your SMART Board 600 or SBD600 series interactive whiteboard product box includes software CDs for Mac OS or Windows® operating systems. You must install this software before you can use your interactive whiteboard system's features.

If the included software CDs are for an older version of the software, you will need to download a newer version. SMART Notebook software upgrades and online Help are available at www.smarttech.com/support/software/index.asp. This page also lists the minimum hardware requirements for each software version. If SMART product drivers and SMART Notebook software (or SMART Board software) are already installed on your computer, take this opportunity to upgrade your software to ensure compatibility.

Connecting the Cables to the UF55/UF55w Projector

Refer to the following diagrams while you connect the cables to the projector.

Routing the Cables

When connecting cables from the UF55 projector to SMART Board 560, 580, 660, 680 and SBD680 interactive whiteboards, make sure that all cables pass along the top of your SMART Board interactive whiteboard's wall-mounting bracket, and then down the left or right side of your interactive whiteboard.

When connecting cables from the UF55w projector to a SMART Board 685 interactive whiteboard, make sure that all cables pass between the two SMART Board interactive whiteboard wall-mounting brackets. The wall-mounting brackets should be spaced at least four inches apart to provide full support for your interactive whiteboard's weight.

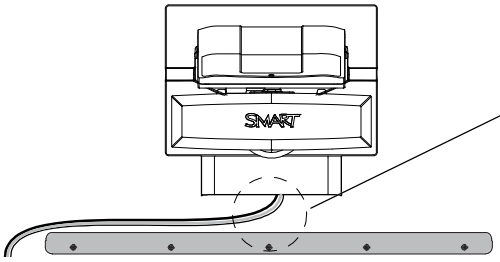

Cable Routing for SMART Board 560, 580, 660, 680 and SBD680 Interactive Whiteboards

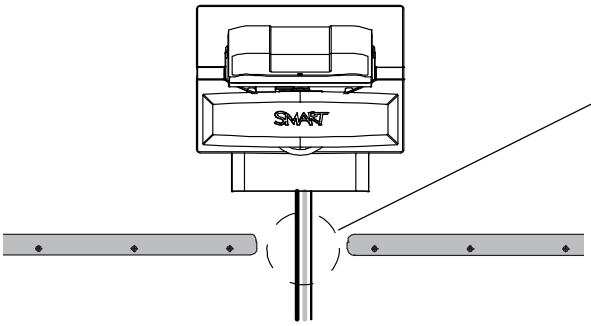

Cable Routing (Between the Two Wall-Mounting Brackets) for SMART Board 685 or SBD685 Interactive Whiteboards

NOTE

Don't connect the power cable to a power outlet until you've connected all the cables to the projector.

To connect the power, ECP and network cables to the projector

1. Remove the projector's cable cover.
2. Pass the cable through the boom, and then connect it to the power supply receptacle. Make sure that the power cable is in the far right position in the cable slot.

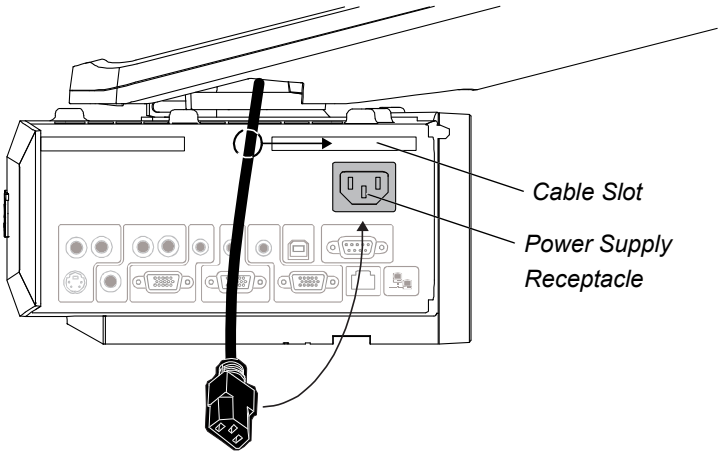

3. Pass the ECP cable through the boom. The upper part of the ECP cable is too thick to fit inside the cable slot. Instead, put all the cables on the thinner part of the ECP cable in the cable slot.

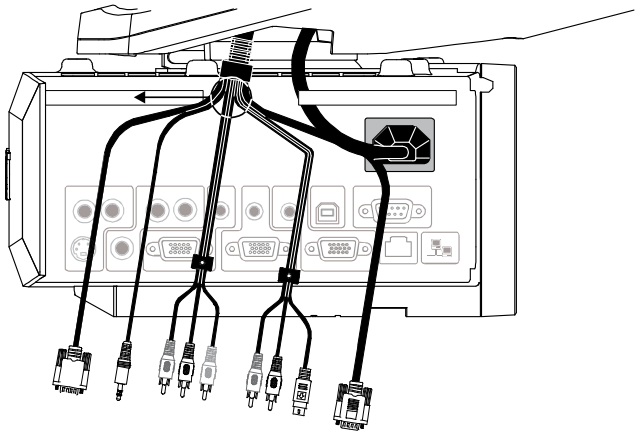

4. Connect the ECP cables to the projector by connecting each section separately.
   - Connect the S-Video and two Audio cables to the receptacles in section A.
   - Connect the Video and two Audio cables to the receptacles in section B.
   - Connect the Audio 2 and Computer 2 VGA cables to the receptacles in section C.
   - Connect the ECP DB-9 Control cable in section D.

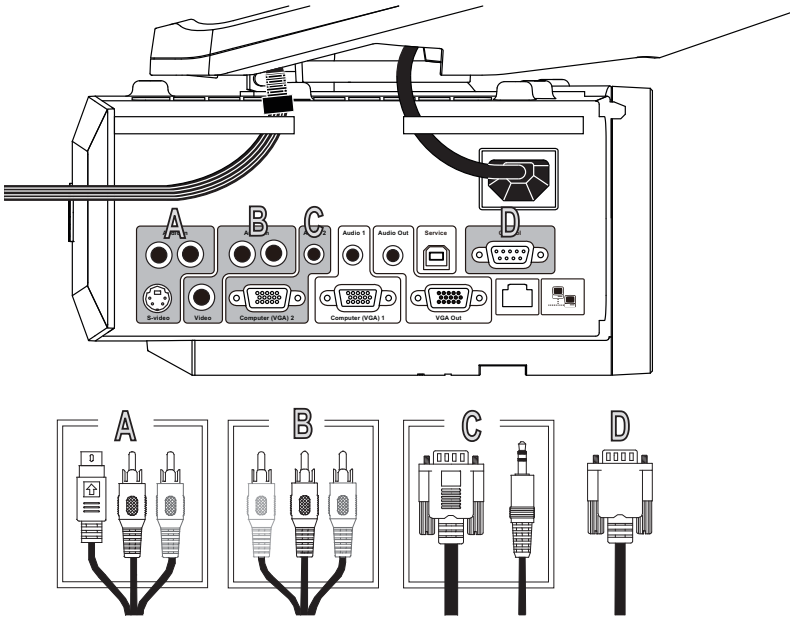

5. Connect the VESA RGB (VGA) connector and the DB-25 connector from the harness cable to the ECP.

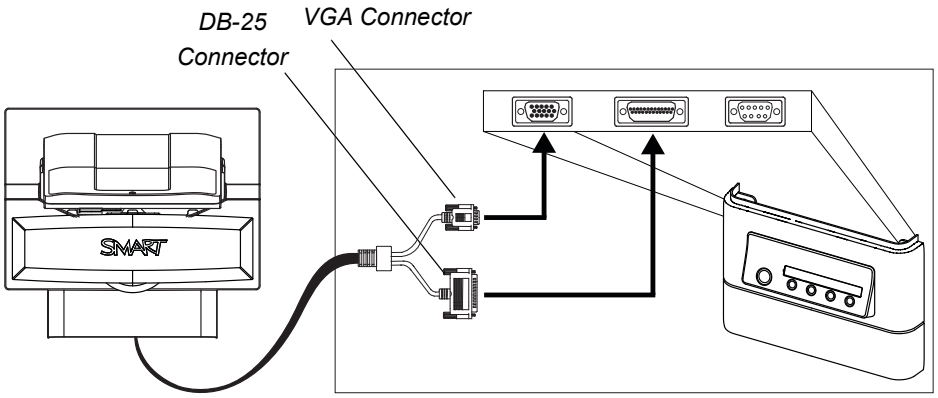

6. Pass the Audio, VGA and network cables (not included) through the boom, and then connect them to your projector.
   - Connect the Audio 1 and Computer 1 VGA from your external computer (section E).
   - Connect the RJ-45 network cable from your external LAN receptacle (section F).

   NOTE
   These cables are for optional equipment.

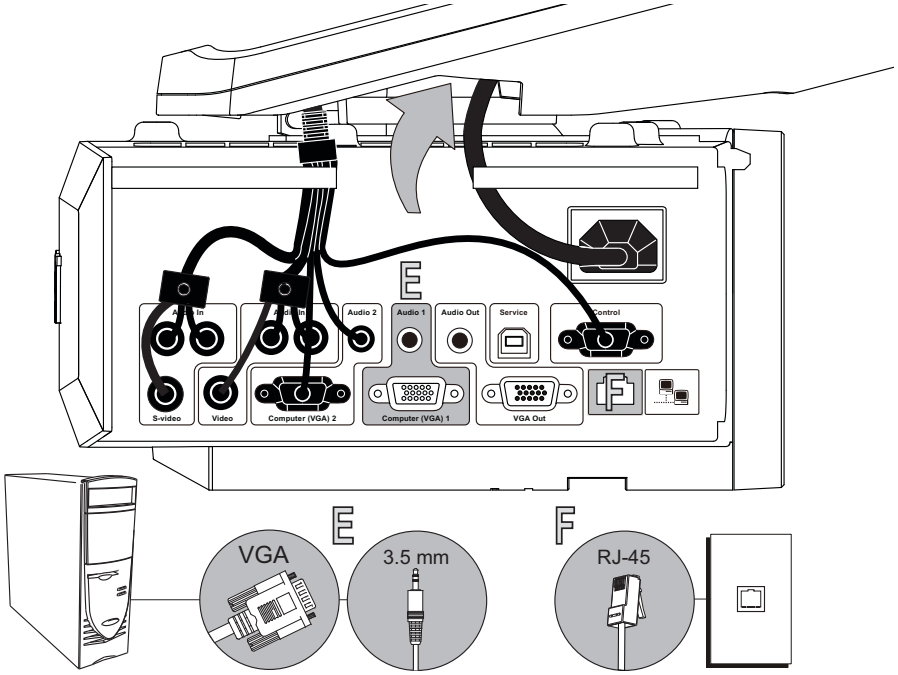

7. Replace the projector's cable cover.
8. Connect the projector's power cable to an outlet.

Connecting Your Guest Computer to the ECP's Inputs

IMPORTANT

- Use the VGA connector on the ECP to connect your guest computer's video output. If you do not have a guest computer, use the VGA connector on the ECP to connect your host computer's video output.
- Most laptops require configuration to output VGA signals.

To connect your guest computer's video or audio output to your ECP

1. Turn off your SMART Board interactive whiteboard system.

   IMPORTANT
   Make sure that you have a shielded VGA cable (not included) and an audio cable with 3.5 mm plugs (optional, not included) that are long enough to connect your guest computer to your ECP.

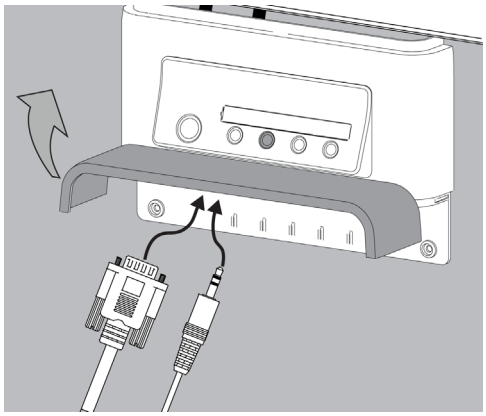

2. Connect the VGA cable to the VGA input on the bottom of your ECP.
3. Connect the other end of your VGA cable to your computer's video output.
4. If you're connecting audio, connect your audio cable to the audio input.
5. Connect the other end of the audio cable to your computer's audio output.

   IMPORTANT
   Your interactive whiteboard system does not include speakers. To play audio, connect an audio system to the projector's audio output. Consult your authorized SMART reseller to determine your audio output options.

Connecting Peripheral Visual or Audio-Visual Devices

To connect a DVD player, VCR, document camera, digital camera or other peripheral visual or audio-visual device to your SMART Board interactive whiteboard system, you must connect the device's video and audio outputs to the ECP. You can connect up to three peripheral devices and a host computer at the same time.

IMPORTANT

If you have peripheral devices that do not use a 4-pin mini-DIN connector or an RCA composite video jack, or if your device has an audio connection that does not use RCA jacks, you may need to purchase third-party adapters.

To connect S-video, composite and other audio-visual inputs

1. Turn off your SMART Board interactive whiteboard system.
2. Connect the device's video cables to the ECP using the appropriate inputs.
   - Input 2 is the VGA connector.
   - Input 3 is the S-video 4-pin mini-DIN connector.
   - Input 4 is the composite video input.

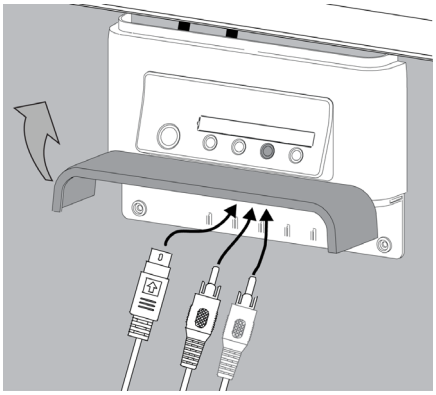

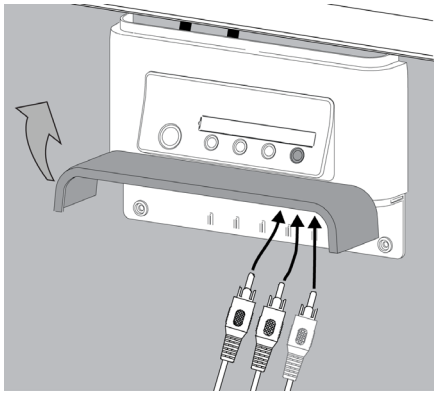

3. For each peripheral device, connect the device's audio cables to the associated red and white RCA jacks adjacent to the appropriate video input.

Chapter 4

Using Your SMART Board 600i3 or SBD600i3 Interactive Whiteboard System

This chapter describes the basic operation of your interactive whiteboard system, and also explains how to retrieve system information and access the projector's image adjustment options.

Turning the System On and Off and Selecting an Input 30

Using Your Interactive Whiteboard 30

Using Your UF55/UF55w Projector 31

Using Your Remote Control 31

Menu Options 31

Turning the System On and Off and Selecting an Input

Your ECP has a Power button and four Input Selection buttons. You can connect up to three peripheral devices and one host computer at the same time. You can add your own labels to the ECP buttons. The ECP's Power button includes a cool down function that extends the lamp's life span.

To turn on your interactive whiteboard system and select an input

1. Press the ECP's **Power** button to turn on the system.

   NOTE
   Depending on the video source, it may take several seconds for the video image to display.

2. Press an **Input Selection** button to select a video source.
3. Press the ECP's **Power** button twice.

TIP
Consider leaving the system on between uses. Repeatedly turning the lamp on and off can reduce its life.

Using Your Interactive Whiteboard

Refer to the *SMART Board 600 and SBD600 series Interactive Whiteboard Installation and User's Guide* (document 1414) for more information on using your interactive whiteboard.

When you connect your SMART Board interactive whiteboard system to a computer with SMART product drivers and SMART Notebook (or SMART Board software) installed, you can access the software's full capabilities. You can use the pen tray tools to write in digital ink on your desktop or any open application, erase the digital ink from your interactive whiteboard's screen, capture and save your notes to a SMART Notebook file, or write directly into any Ink Aware application. The full capabilities of SMART Notebook include SMART Board Tools and a wide range of digital content.

For more resources, visit http://www2.smarttech.com/st/en-US/Country/, and then select your country. In the Support section of this site, you'll find up-to-date, product-specific information, including setup instructions and specifications. This website's Training Center also has free learning resources, hands-on lessons and information on how to get more training.

Using Your UF55/UF55w Projector

The UF55/UF55w projector includes two LED indicators. Refer to the Power and Temperature status indicators on the projector's underside to determine the projector status and to troubleshoot unexpected behavior.

Using Your Remote Control

The UF55/UF55w projector system remote control enables you to open on-screen projector menus and change the projector settings. You can also use the remote control's **ON/IDLE** button or the ECP power button to turn the projector system on or off.

NOTE
Ensure that you remove the remote control battery's plastic casing before use.

You can access the adjustment options through the remote control's **Menu** button.

To adjust settings using the remote control

1. Press the **left** or **right** button to access a menu option.
2. Press the **up** or **down** button to select the relevant menu option.
3. Press the **left** or **right** button to move between menu option settings.
4. Press **enter** when you're satisfied with the settings.

Menu Options

NOTE
The menu heading at the top of all settings is **SMART UF55 Settings**.

Menu Heading	Settings	Description
Image Adjustment	Display Mode	Adjusts the display output to **sRGB**, **Bright Room**, **Dark Room**, **User**, and **SMART Presentation**.
	Brightness	Adjusts projector brightness from 0 to 100.
	Contrast	Adjusts projector contrast from 0 to 100.
	Frequency	Adjusts the frequency of the projected image from -5 to 5. Default is set to 0. Applies to the VGA inputs only.
	Tracking	Synchronizes your display timing with your computer's graphic card from 0 to 31. Applies to the VGA inputs only.

Menu Heading	Settings	Description
Image Adjustment, cont'd.	H-position	Adjusts the horizontal position of the projected image from 0 to 100 **NOTE:** Don't adjust this option unless a certified SMART Technical Support Specialist advises you to. You can apply these settings only after all other changes to the boom are made. This option applies to VGA inputs only.
	V-position	Adjusts the vertical position of the projected image from -5 to 5 **NOTE:** Don't adjust this option unless a certified SMART Technical Support Specialist advises you to. You can apply these settings only after all other changes to the boom are made. This option applies to VGA inputs only.
	Saturation	Adjusts the image from black and white to saturated color from 0 to 100. This option applies to S-video and composite inputs only.
	Sharpness	Adjusts projector contrast, from 0 to 31. This option applies to the S-video and composite inputs only.
	Tint	Adjusts the image color balance of red and green from 0 to 100. This option applies to the S-video and composite inputs only.
	White Peaking	Adjusts the image color brightness from 0 to 10
	Degamma	Adjusts the color performance of the display from 0 to 3
	Color	Adjusts your individual color settings
Audio Control	Volume	Increases and decreases volume from -20 to 20
	Mute, Disable Volume Control and Closed Captioning	Turns these features On or Off
	Closed Captioning Language	Adjusts the closed captioning language to **CC1** language or **CC2** language

Menu Heading	Settings	Description
Default Settings	Auto Signal Detect	Select **On** to scan until the first input signal is found, or select **Off** to maintain signal detection in one input connector.
	Lamp Reminder	Select **On** or **Off** to show or hide the change lamp warning message when it appears.
	Lamp Mode	Adjusts brightness to **Standard** or **Economy**
	Auto Power Off (minutes)	Sets the countdown timer from 0 to 180 minutes
	Zoom	Adjusts the zoom in or out from 0 to 30. The settings will change the image settings when they're done mechanically with the boom.
	Projector ID	Sets the projector ID number from 0 to 99
	Keystone	Adjusts the vertical keystone on the projector unit from -40 to 40. **NOTE:** Don't adjust this option unless a certified SMART Technical Support Specialist advises you to.
	Aspect Ratio	Adjusts the image output to **Fill Screen**, **Match Input** or **16:9**.
	Start up Screen	Selects the type of start up screen to **SMART/User**, **Capture User Start up Screen** or **Preview Start up Screen**.
	Set to Default	Resets all of your projector settings to their factory defaults. **NOTE:** Don't adjust this option unless you want to reset all of the applied settings, or unless a certified SMART Technical Support Specialist advises you to.
Network Settings	Status	Displays the network connection status as **Connected** or **Disconnected**
	DHCP	Turns the network DHCP **On** or **Off**
	Password Reminder	Enables you to send an e-mail password to yourself, using Web management
	IP Address	Displays your IP address in x.x.x.x format

Menu Heading	Settings	Description
Network Settings, cont'd.	Subnet Mask	Displays the subnet mask number in x.x.x.x format
	Gateway	Displays the default gateway of the network to the projector in x.x.x.x format
	DNS	Displays the DNS number in x.x.x.x format
	MAC Address	Displays the MAC address in xx-xx-xx-xx-xx-xx format
	Group Name	Displays the group name
	Projector Name	Displays the projector name
	Location	Displays the location
	Contact	Displays your contact information
Multiple Languages	Language	Projector menu support is available in English (default), French, German, Italian, Spanish, Brazilian Portuguese, Iberian Portuguese, Russian, Swedish, Polish, Norwegian, Finnish, Czech, Greek, Danish, Dutch, Japanese, simplified Chinese, traditional Chinese and Korean.
Projector Information	Lamp Hours	Displays the duration of your projector lamp's use in xxxx format, from when it was reset last
	Input	Displays the input connector type
	Resolution	Displays the current display resolution
	Firmware Version	Displays the projector firmware version in x.x.x.x format
	MPU Version	Displays the projector's MPU version
	Network Version	Displays the projector's network version
	Model Number	Displays the projector's model number
	Serial Number	Displays the projector's serial number

To access further information on Web Management, Home Page and the Control Panel, see the *UF55/UF55w Projector User's Guide* (document 133564).

Chapter 5

Remotely Managing Your SMART Board 600i3 or SBD600i3 Interactive Whiteboard System

This chapter includes detailed instructions on how to set up your computer or room control system to manage your SMART Board 600i3 or SBD600i3 interactive whiteboard system settings.

Connecting Your Room Control System to the ECP 36

Pin Configuration on the ECP RS-232 Connector..... 36

Serial Interface Settings 36

UF55/UF55w Programming Commands..... 38

Powerstate Controls 38

Command Inventory 38

Powerstate Control..... 40

Source Selection 41

Video Control 41

Audio Control 42

Network Information 43

System Information 44

Connecting Your Room Control System to the ECP

You can externally manage projector settings by connecting a computer or room control system to the serial interface (RS-232) on the ECP for the UF55/UF55w projector. Using a computer connection or room control system, you can select video inputs, start up or shut down your interactive whiteboard and request information such as projector lamp use, current settings and network addresses.

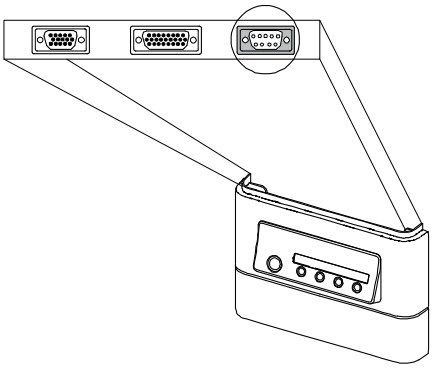

Pin Configuration on the ECP RS-232 Connector

The following table provides the pin configuration on the ECP. This pin configuration follows a three-wire connection so that a straight-through male to female RS-232 serial cable connects to the ECP serial interface in the following arrangement:

Pin Number	Female UF55/UF55w Projector ECP RS-232 Connector
2	Transmit
3	Receive
5	Signal Ground

Serial Interface Settings

You're unable to configure the UF55/UF55w projector's serial interface settings. You must configure your computer's serial communication program (such as Microsoft® HyperTerminal) or your room control system's serial communication settings with the following values:

Setting	Value
Data Rate	19.2 kbps
Data Bits	8
Parity	None

Setting	Value
Stop Bits	1
Flow Control	None

NOTES

- All commands should be in ASCII format. Terminate all commands with a carriage return.
- All responses from the ECP are terminated with a carriage return line feed combination followed by a command prompt. Wait until you receive the command prompt indicating that the system is ready for another command before proceeding.
- The room control feature of your projector is always on.

To configure your computer's serial interface

1. Turn on your computer, and then start your serial communications program or terminal emulation program.
2. Connect your computer to the ECP's serial connector using a DB9 cable.

   CAUTION
   Do not connect your serial cable directly to the projector's RS-232 serial interface. Use ECP's RS-232 serial interface only.

3. Configure your serial interface settings using the values in the table in the previous section, and then press ENTER.

   An "invalid cmd= ? for help" message appears, and the > character appears as a command prompt on the following line.

   NOTE
   If no message or an error message appears, your serial interface configuration isn't correct. Repeat step 3.

4. Type commands to configure your settings.

   NOTES
   – To see a list of available commands, type **?** and then press ENTER.
   – When you're using a terminal emulation program, turn on your program's local echo setting if you want to see characters as you type them.

UF55/UF55w Programming Commands

Powerstate Controls

The UF55/UF55w projector responds to commands only at certain power levels and times. There are four projector power states:

- Idle
- Powering (startup)
- On (operating)
- Cooling (idle)

The embedded firmware program coordinates command sequencing and is capable of buffering up to 127 commands. In each power state, the commands are buffered until the system can process them. The ? command will list all available commands for the current powerstate.

IMPORTANT

The system buffer can delay response times. Response times vary.

Command Inventory

The UF55/UF55w projector responds to the commands in the tables on the following pages.

CAUTION

- Cycling power to the projector repeatedly can lock or damage your interactive whiteboard system. After you turn off the system, allow at least 15 minutes for cooling before sending the On command to start the system.
- Check your entries carefully before entering your commands.

NOTES

- Commands aren't case sensitive.
- Type commands exactly as they appear in the left column of the tables.
- Press ENTER after typing each command.
- After the projector executes a command, it generates a response. There are two ways to program the command sequence to turn on the system, wait for the powering cycle to finish and select an input source:
  - Allow the ECP to sequence the commands
  - Control the sequence programmatically

To allow the ECP to sequence commands

1. Type **on**, and then press **ENTER**.
2. Type **set input=vga1**, and then press **ENTER**.

To control the sequence programmatically

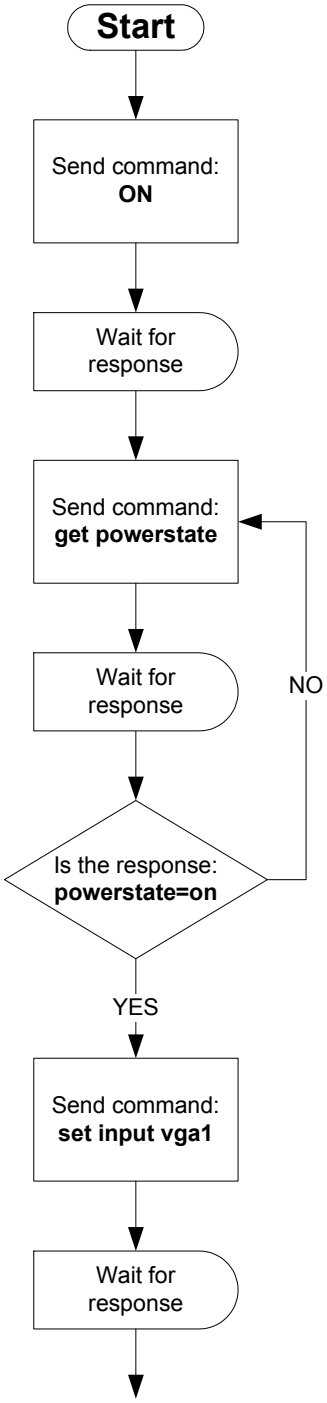

Powerstate Control

The Powerstate control enables the projector to turn on or off and switch between other related controls.

Command	Response	Powered Off
on	powerstate=[powerstate]	yes
off [off option]	powerstate=[powerstate]	yes
get powerstate	powerstate=[powerstate]	yes

NOTE

You must send the **Off** command twice. The first command displays an on-screen message, and the second command shuts off the system. You must send the second command within 10 seconds of the first command or it times out.

Field	Possible Values	Description
off option	now	This is an optional field, which shuts down the projector immediately. If **Now** isn't specified, a dialog box appears with the message, "**Press Power Button to Turn off Projector**." A second **Off** command must be sent within 10 seconds to completely turn off the projector or the projector doesn't turn off.
powerstate	powering on cooling confirm off idle	Indicates the projector's current powerstate **NOTE:** Confirm Off is a non-selectable powerstate that is returned during stage one of the two-button off sequence.

Source Selection

The Source Selection control enables you to switch between input sources.

.

Command	Response	Powered Off
set input [target]	input=[current]	no
get input [current]	input=[current]	yes

Field	Possible Values	Description
target input	=VGA1 =VGA2 =Composite =S-Video	Enables you to select which application you would like to switch to
current input	VGA1 VGA2 Composite S-Video None	Indicates the current selected input **NOTE:** The None value is a non-selectable value that appears when you enter a “get input” command while the projector is in idle mode.

Video Control

The Video control enables you to switch between Video output related controls.

Command	Response	Powered Off
get brightness [target]	brightness=[current]	no
get brightness	brightness=[current]	no
set contrast [target]	contrast=[current]	no
get contrast	contrast=[current]	no

Field	Possible Values	Description
target brightness	+val -val =0 to 100	If you specify a + or - before the value, the specified value is added or subtracted from the current value. If you indicate a specific numerical value, the brightness sets directly to the number.
current brightness	0 to 100	Indicates the current brightness
target contrast	+val -val =0 to 100	If you specify a + or - before the value, the specified value is added or subtracted from the current value. If you indicate a specific numerical value, the contrast sets directly to the number.
current contrast	0 to 100	Indicates the current contrast

Audio Control

The Audio control enables you to switch between audio output related controls. This value range should match the range displayed on the OSD.

Command	Response	Powered Off
set volume [target]	volume=[current]	no
get volume	volume=[current]	no

Field	Possible Values	Description
target volume	+val -val =-20 to 20	If you specify a + or - before the value, the specified value is added or subtracted from the current value. If you indicate a specific numerical value, the volume sets directly to the number.
current volume	-20 to 20	Indicates the current volume

Network Information

The Network Information commands enables you to display various types of network information.

Command	Response	Powered off
get netstatus	netstatus=[current]	yes
set dhcp	dhcp=[current]	yes
get dhcp	dhcp=[current]	yes
set ipaddr	ipaddr=[current]	yes
get ipaddr	ipaddr=[current]	yes
set subnetmask	subnetmask=[current]	yes
get subnetmask	subnetmask=[current]	yes
set gateway	gateway=[current]	yes
get gateway	gateway=[current]	yes
set primarydns	primarydns=[current]	yes
get primarydns	primarydns=[current]	yes
get macaddr	macaddr=[current]	yes

Field	Possible Values	Description
current netstatus	connected disconnected	Displays the current state of the network interface
current dhcp	on off	Displays whether the DHCP networking is enabled or disabled
target dhcp	=on =off	Displays whether the DHCP networking is enabled or disabled
current ipaddr	x.x.x.x	Displays the current IP address
target ipaddr	x.x.x.x	Displays the target IP address (only if dhcp=off)
current subnetmask	x.x.x.x	Displays the current subnet mask
target subnetmask	x.x.x.x	Displays the target subnet mask
current gateway	x.x.x.x	Displays the current gateway
target gateway	x.x.x.x	Displays the target gateway
current primarydns	x.x.x.x	Displays the current primary DNS
target primarydns	x.x.x.x	Displays the target primary DNS
MAC address	x-x-x-x-x-x	Displays the device's MAC address.

System Information

The System Information commands enable you to display various types of system information.

Command	Response	Powered off
get projectorid	projectorid=[current]	no
get serialnum	serialnum=[current]	yes
get lamphrs	lamphrs=[current]	yes
get syshrs	syshrs=[current]	yes
get fwverddp	fwverddp=[current]	yes
get fwvernet	fwvernet=[current]	yes
get fwvermpu	fwvermpu=[current]	yes
get fwver	fwver=[current]	yes
get bootver	bootver=[current]	yes

Field	Possible Values	Description
current projectorid	0 to 99	Displays the projector's assigned ID number
current serialnum	xxxxxxxxxxxxx	Displays the projector's serial number
current lamphrs	0 to 5000	Displays the current lamp hour usage
current syshrs	0 to 5000	Displays the current system hour usage
current fwverddp	x.x.x.x	Displays the projector's DDP version
current fwvernet	x.x.x.x	Displays the projector's network firmware version
current fwvermpu	x.x.x.x	Displays the MPU version
current fwver	x.x.x.x	Displays the ECP application version
current bootver	x.x.x.x	Displays the bootloader version

Chapter 6

Troubleshooting Your SMART Board 600i3 or SBD600i3 Interactive Whiteboard System

This chapter provides basic troubleshooting information for your SMART Board 600i3 or SBD600i3 interactive whiteboard system. For more complex issues or issues not covered in this section, contact your authorized SMART reseller or the SMART Technical Support website.

System Warning Lights 46

ECP Ready Light and System Status 46

Projector Ready Lights and Projector Status 46

Errors 47

Temperature Exceeded 47

Fan Failure 47

Color Wheel Failure 48

Lamp Failure 48

Ready Light Isn't Lit 48

Interactive Whiteboard Indicators and Controls 49

System Warning Lights

ECP Ready Light and System Status

The ECP ready light is located on the ECP's main power button. This button also functions as your status warning light.

Ready Light	Status
Off	The projector system isn't receiving power. Check your power cord, RS-232 connector at the projector (located below the power cable) and power supply. If nothing changes after checking your power cord, RS-232 connector and power supply, call your authorized SMART reseller.
Solid amber	The projector is receiving power but is turned off.
Flashing green	The projector is receiving power and is starting up.
Solid green	The projector is on and the ECP is receiving power and communicating with the projector.
Flashing amber	Your interactive whiteboard system is about to enter Idle mode.

Projector Ready Lights and Projector Status

The UF55/UF55w projector's two indicator LED lights (Power and Temperature) are located on the boom-mounted projector. Specific light sequences convey information about the state of your projector, including warning messages and issues.
The following table describes projector warning messages and issues.

IMPORTANT
After you resolve your projector's issue, you must disconnect and then reconnect your projector power cable, clear the indicator light sequence, and then reset your projector's status.

Message	Power LED (Green/Amber)	Temperature LED (Red)
Idle mode	Solid Amber	Off
Powering	Flashing Green	Off
On (Lamp On)	Solid Green	Off
Cooling	Flashing Amber	Off

Message	Power LED (Green/Amber)	Temperature LED (Red)
Error (Temperature Exceeded)	Off	Flashing Red
Error (Fan Failure)	Off	Solid Red
Error (Color Wheel Failure)	Off	Solid Red
Error (Lamp Failure)	Solid Amber	Flashing Red

Errors

Temperature Exceeded

If the Temperature Exceeded indicator message appears and your projector turns off during use, one of the following issues is occurring:

- Your projector overheated internally. The projector can overheat because of blocked air vents or an internal temperature over 131°F (55°C).
- The temperature outside your projector is too high.

To resolve the temperature exceeded error

1. Wait 15 minutes for the projector to cool down before attempting to restart.
2. Make sure that nothing is blocking the air intake and exhaust.
3. Disconnect the power cord from the power outlet.
4. Reconnect the power cord.
5. If the previous steps don't resolve the issue and your projector still doesn't turn on, unplug the power cord, and then contact your authorized SMART reseller.

Fan Failure

If the Fan Failure indicator message appears and your projector turns off during use, one of the following issues is occurring:

- One of the fans has failed.
- Your projector is overheating internally.

To resolve your fan failure error

Disconnect the power cord, and then contact your authorized SMART reseller.

Color Wheel Failure

If the Color Wheel Failure error message appears and your projector turns off during use, your projector has an internal problem.

To resolve the color wheel failure error

1. Disconnect the power cord from the power outlet.
2. Reconnect the power cord.
3. If the previous steps don't resolve the issue, disconnect the power cord, and then contact your authorized SMART reseller.

Lamp Failure

If the Lamp Failure indicator message appears and the lamp turns off during use or won't turn on, one of the following issues is occurring:

- The lamp over-heated. The lamp can overheat due to blocked air vents.
- The lamp temperature is too high.
- You need a new lamp because the lamp has reached the end of its life.
- The projector has an internal problem.

To resolve your indicator lamp failure error

1. Disconnect the power cord from the power outlet.
2. Reconnect the power cord.
3. If the previous steps don't resolve the issue, the lamp might be at the end of its life. See page 57 or go to the SMART Technical Support website for information on how to replace the lamp.
4. If the projector still doesn't turn on, unplug the power cord, and then contact your authorized SMART reseller.

Ready Light Isn't Lit

If your Ready light isn't lit, one of the following issues is occurring:

- There was a power outage or a power surge.
- A circuit breaker or a safety switch was tripped.
- The projector isn't connected to the power source.
- The projector has an internal problem.

To resolve your unlit ready light issue

1. Check the power source, and then make sure that all cables are connected.
2. Confirm that your projector is connected to an active power outlet.
3. Make sure that the pins on the connectors aren't broken or bent.
4. Make sure that the **Hide Display** feature on the remote is disabled.
5. If the previous steps don't resolve the issue, disconnect the power cord, and then contact your authorized SMART reseller.

Interactive Whiteboard Indicators and Controls

Your SMART Board 600 or SBD600 series interactive whiteboard includes the following indicators and controls:

- A ready light LED
- Pen tray buttons, LEDs and sensors
- The controller module's reset button

The ready light LED is in the lower-right corner of your interactive whiteboard's frame. The ready light indicates the operational state of the controller module. If your interactive whiteboard behaves erratically or becomes unresponsive, or if the LED displays colors other than green when it's on, try resetting the power by unplugging the USB connection to your computer.

See the *SMART Board 600 and SBD600 Series Interactive Whiteboard Installation and User's Guide* (document 1414) to resolve common issues. If the issues persist, see the *Fast Track Troubleshooting* flowcharts (document 117615) on the SMART Technical Support website.

Chapter 7

Maintaining Your SMART Board 600i3 or SBD600i3 Interactive Whiteboard System

This chapter includes methods for preventing damage to and properly cleaning your SMART Board 600i3 or SBD600i3 interactive whiteboard system. Follow the additional instructions and recommendations in the *SMART Board 600 and SBD600 Series Interactive Whiteboard Installation and User's Guide* (document 1414) to properly maintain your interactive whiteboard system.

Preventing Damage to Your Interactive Whiteboard..... 52

Keeping the Writing Surface Clean..... 52

Removing Permanent Marker Ink Stains..... 53

Cleaning the Pen Tray..... 53

Cleaning the UF55/UF55w Projector..... 54

Cleaning the Projector..... 54

Transporting Your SMART Board 600i3 or SBD600i3 Interactive Whiteboard System..... 55

Contacting SMART Technical Support..... 55

Locating Your Projector Serial Number..... 55

Preventing Damage to Your Interactive Whiteboard

Although your SMART Board interactive whiteboard's surface is very durable, take the following precautions to prevent damage to the interactive screen and other components.

- Don't use sharp or pointed objects, such as ballpoint pens or pointers, as writing tools.
- Don't use abrasive erasers or harsh chemicals when cleaning your product.
- Don't leave adhesive tape on the writing surface for extended periods. Lifting the tape may remove the coating that provides your product's dry-erase capability.
- Don't set up and use your interactive whiteboard in an area with excessive levels of dust, humidity or smoke.

Keeping the Writing Surface Clean

For cleaning instructions, refer to the *SMART Board 600 and SBD600 Series Interactive Whiteboard Installation and User's Guide* (document 1414).

IMPORTANT

Before you clean your interactive whiteboard, shut down your computer or disconnect the USB cable from your interactive whiteboard so that you do not scramble the desktop icons or inadvertently activate applications when you wipe your interactive whiteboard's screen.

With proper care, your SMART Board interactive whiteboard will provide years of trouble-free service. Follow these tips to keep the screen surface clean:

- Don't use low-odor dry-erase markers such as Sanford EXPO2®, which can be very difficult to remove. Use standard dry-erase (high-odor) markers that include a warning to use them only in well-ventilated areas.
- Erase dry-erase ink as soon as possible after use. The longer dry-erase ink stays on the surface, the more difficult it is to remove.
- Remove excess dry-erase dust with a damp lint-free cloth before using a cleaner.
- If erasing doesn't completely remove dry-erase ink, clean the writing surface with a household glass cleaner, such as Windex®, daily, weekly or as required.
- Use a dry-erase marker cleaner if you can still see ink marks after erasing.
- Don't allow excess glass cleaner to flow into the crack between the lower frame and the writing surface, or into the pen tray recesses.
- Use isopropyl alcohol for stubborn stains and ghosting.

Removing Permanent Marker Ink Stains

To remove marks made with a permanent marker, use a cleaner such as Sanford EXPO Dry Erase Board Doctor. Write directly over the permanent ink stain with the Board Doctor pen, allow the solution to dry completely, and then wipe clean.

You can also use a high-odor dry-erase marker to remove marks from a permanent marker because dry-erase ink contains solvents that can remove permanent ink. Cover the permanent ink with the dry-erase ink, and then wipe with a lint-free soft cloth while the ink is still wet. If any trace of the ink remains, spray a lint-free cloth with a glass or whiteboard cleaner, and then wipe the area clean.

TIP

When removing permanent marker ink, don't use low-odor or non-scented dry-erase markers. They don't contain the appropriate solvents.

Cleaning the Pen Tray

If the infrared sensors in the bottom of the pen tray's recesses become obstructed by dirt, the sensors won't detect when you remove or replace a pen or the eraser. The LED indicators won't illuminate and the lifted tool won't work on your interactive whiteboard's screen.

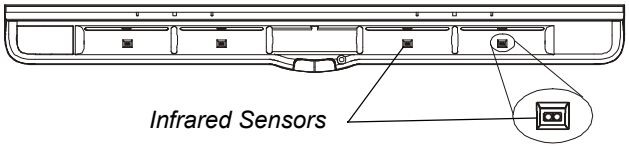

To clean a sensor, moisten a cotton swab with a household glass cleaner, such as Windex, and then carefully clean the infrared transmitter and receiver.

NOTE

There are no user serviceable parts inside the pen tray. Only qualified personnel should disassemble the pen tray. If dust or a small object prevents you from pressing a button, or causes a button to stick, remove the object carefully.

Cleaning the UF55/UF55w Projector

WARNING

Cleaning a boom-mounted projector may result in a fall and injury.

CAUTION

- Before you clean the UF55/UF55w projector, press the power button twice on the ECP or remote to put the system into Idle mode, and then allow the bulb to cool for 30 minutes.
- Do not allow liquids or commercial solvents of any kind to flow into the projector base or head. Do not use spray cleaners or solvents near any part of the projector, since they may damage or stain the unit.

IMPORTANT

Wipe the exterior of the projector using a lint-free cloth.

Cleaning the Projector

Follow these guidelines to clean the projector:

- Avoid touching the lens. If it's necessary to clean the lens:
  - Use liquids or commercial solvents (such as glass cleaners) to clean the lens, but don't spray them directly on the system.
  - Use protective gloves and dip a lint-free cloth (such as Purestat® PW2004) in an anti-static solvent (such as Hyperclean® EE-6310).
  - Make sure that you gently wipe the lens from the center to the outer area.
- Avoid spraying cleaner on the projector system. Spraying on the projector's components and lamp may result in damage and poor image quality.

Transporting Your SMART Board 600i3 or SBD600i3 Interactive Whiteboard System

Save your original SMART Board 600i3 or SBD600i3 interactive whiteboard system packaging so that it's available if you need to transport your interactive whiteboard system. When required, repack it with as much of the original packaging as possible. This packaging was designed with optimal shock and vibration protection. If your original packaging is no longer available, purchase the same packaging directly from your authorized SMART reseller.

If you prefer to use your own packaging materials, make sure that you adequately protect your unit. Ship your interactive whiteboard in an upright position to deter shippers from placing heavy objects on it.

Contacting SMART Technical Support

SMART Technical Support welcomes your call. However, if you experience difficulty with your SMART product, you might want to contact your authorized SMART reseller first. Your local reseller might be able to resolve the issue without delay.

Before contacting SMART Technical Support, make note of your projector's serial number, and then note it in the inside cover of this manual (if you printed it).

Locating Your Projector Serial Number

The serial number on the UF55/UF55w projector is located on the top mounting plate (the side away from the projector's lens). To access the serial number through your projector's on-screen menu, see page 31 of the *UF55/UF55w Projector User's Guide* (document 133564).

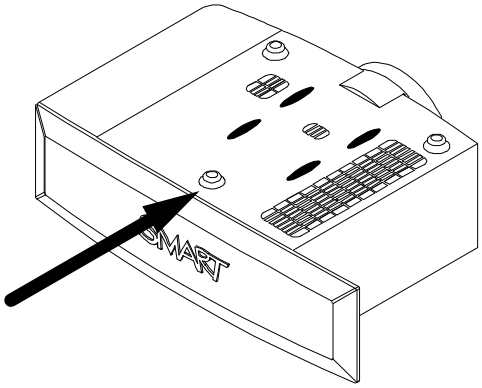

Serial Number Location

Chapter 8

Replacing Your UF55/ UF55w Projector Lamp

This chapter has detailed instructions on how to replace your projector lamp.

Replacing the Projector Lamp 57

Removing the Projector from the Boom 59

Replacing the Projector Lamp Module 61

Replacing the Projector 63

Resetting the Lamp Timer 64

Replacing the Projector Lamp

If a lamp fails, or if a replacement message appears on the UF55/UF55w projector's screen, a qualified person can replace the projector lamp. Don't access the service panel if you don't have a replacement lamp and instructions.

WARNING

- Refer to the safety warnings and precautions published in the *UF55/UF55w Projector User's Guide* (document 133564).
- Do not attempt to service the projector other than performing routine lamp replacement. Other than the lamp module, there are no user-serviceable parts inside the unit.
- This projector detects its own remaining lamp life. Replace the lamp when the lamp life warning message appears. If you continue to use the projector after the replacement message appears, the lamp might shatter or burst, scattering glass throughout the projector head.

- If the lamp has shattered or burst:
  - Call your authorized SMART reseller for instructions. Do not attempt to replace the lamp.
  - Do not touch the glass fragments because they might cause injury.
  - Leave and then ventilate the area where the lamp shattered or burst.
  - Wash your hands thoroughly if you have come in contact with lamp debris.
  - Thoroughly clean the area around the projector, and then discard any edible items placed in that area because they might be contaminated.
- You must remove the projector from the projector's boom before servicing the lamp.
  - Replacing the lamp in a boom-mounted projector might result in a fall or injury.
  - Uncovering the lamp while the projector is mounted on the boom might lead to product damage or personal injury from falling pieces of glass if the lamp is broken.
- When replacing the projector lamp:
  - Turn the projector off and wait 30 minutes for the lamp to cool completely before removing the projector from the boom.
  - Do not remove any screws other than those specified in the lamp replacement instructions.
  - Wear protective eyewear while changing the lamp. Failure to do so can cause injury or loss of eyesight if the lamp shatters or bursts.
  - Use only replacement lamps approved by SMART Technologies. Contact your authorized SMART reseller for replacement parts.
  - Never replace the lamp assembly with a previously-used lamp assembly.
  - To prevent premature lamp failure or exposure to mercury, always handle the fragile lamp assembly with care. Use gloves when touching the lamp. Do not touch the lamp with your fingers.
  - Recycle or dispose of the lamp as hazardous waste, in accordance with local regulations.
- When returning the projector to the boom, replace all of the screws that you removed when you removed the projector. Failure to do so can result in the projector falling from the boom, causing injury or equipment damage.

Removing the Projector from the Boom

Before you can replace the projector lamp, you must remove the projector from the boom.

NOTE

Ensure that you remove the projector's plastic lens cover.

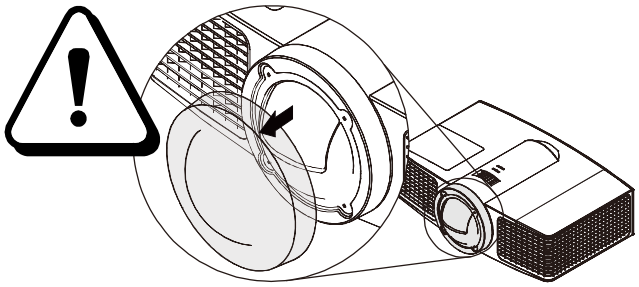

WARNING

Two people are required to remove and replace the projector.

To remove the projector from the boom

1. Turn off the projector by pressing the remote control's **power** button.
2. Wait for the projector to cool by allowing the fan to shut down completely, and then disconnect the power cord from the wall.
3. Disconnect all of the cables from the projector. For details on removing the cable cover, see the *UF55/UF55w Projector User's Guide* (document 133564).
4. While firmly holding the projector with your hand, and without applying pressure or weight to the projector boom, remove the screw holding the cover in place, and then remove the cover. Place the screw in a safe place.

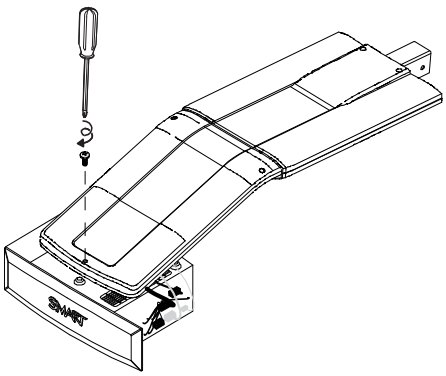

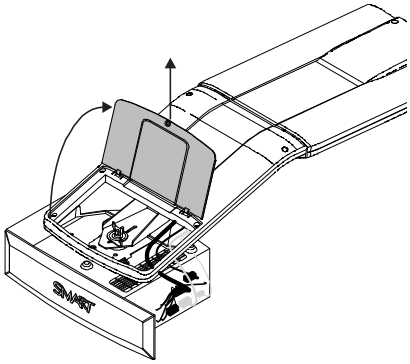

5. If you use a projector padlock, make sure that you remove it from the locking loop. If you need access to the projector locking screw, loosen the wingnut and slide the projector all the way back, away from your interactive whiteboard's screen, and then re-tighten the wingnut.

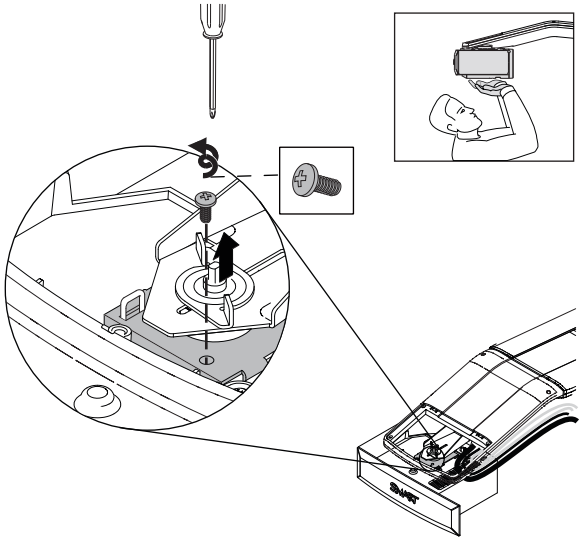

6. Remove the single screw on the bracket with a Phillips® No. 2 screwdriver. Place the screw in a safe place.

CAUTION
The projector may drop freely if it is moved around when you remove the screw.

7. Using two hands, remove the projector from the boom.

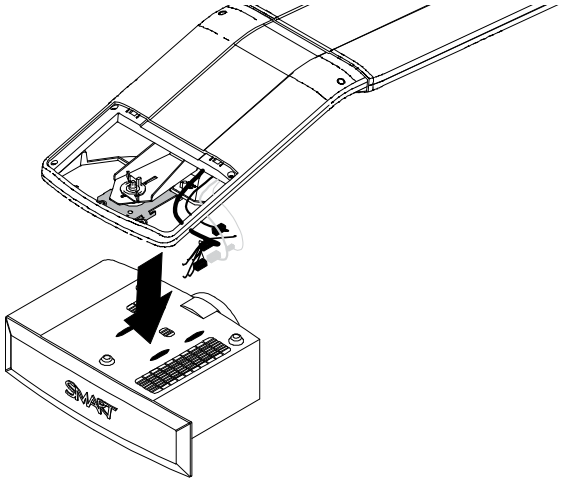

8. Carefully unhook the projector from the hooks on the projector boom, and then lay the projector flat on your work area so that the warning lights face upward.

Replacing the Projector Lamp Module

After you remove the lamp from the boom, follow these instructions to replace the lamp.

To remove and replace the lamp

1. Wait at least 30 minutes for the projector to completely cool down.
2. Pull up the outer lamp cover with your finger.

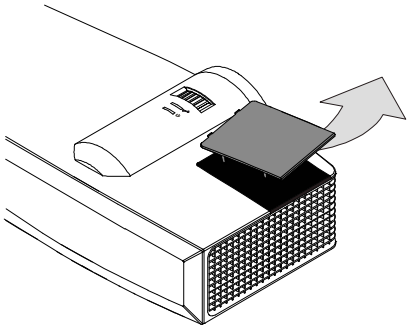

3. Remove the outer lamp cover and keep it in a safe place.
4. Loosen the two screws on the inner lamp module with a Phillips No. 2 screwdriver.

   The screws remain captive with the lamp module.

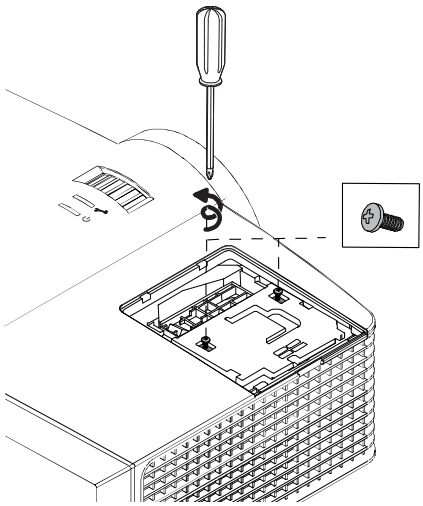

5. Pull up on the lamp module's handle, and then remove the lamp.

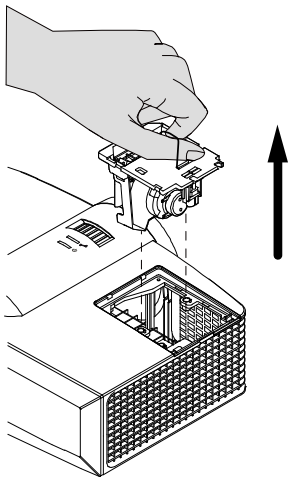

IMPORTANT
Recycle or dispose of the lamp module according to your local waste authority.

6. Remove the replacement lamp module's packaging.

CAUTION
Do not touch any part of the lamp module except the housing.

7. Place the replacement lamp in the lamp slot, push the lamp all the way down, and then tighten the lamp locking screws until they're secure.
8. Replace the outer lamp cover in its original position.

Replacing the Projector

WARNING
Two people are required to replace the projector.

To replace the projector on the boom

1. Put the projector back on the boom by aligning the hooks with the slots on the projector.

   CAUTION
   Hold the projector firmly when re-attaching it to the stationary boom.

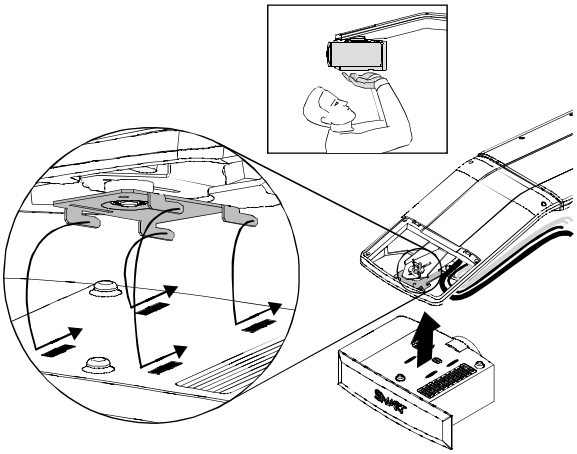

2. Secure the projector to the plate with the screw that you retained after you removed the projector from the boom.

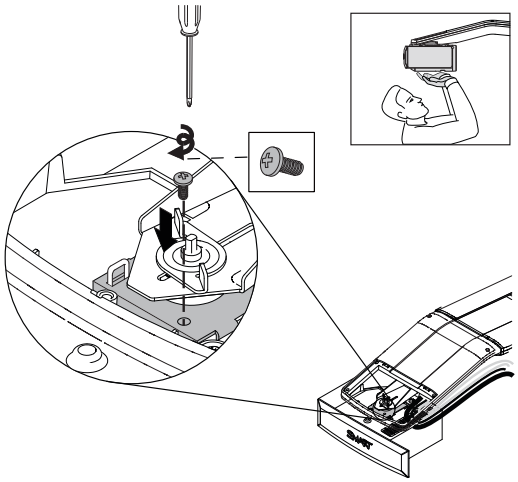

   WARNING
   Be sure to replace this screw. The projector can fall from the boom causing injury or damage to the projector when this screw is not in place.

3. Replace your projector padlock (optional).

4. Connect all cables to the projector, and then attach the cable cover.
5. Replace the cover on the top of the boom.
6. Replace and tighten the screw until it's secure, without applying pressure or weight to the projector boom.
7. Connect the power cord to the wall power outlet, and then wait for the projector to turn on completely.
8. If required, re-adjust the projected image. See page 15.

Resetting the Lamp Timer

After you replace the lamp, reset the lamp timer.

To reset the lamp timer

1. Press the **power** button on the extended control panel (ECP) or the remote control to start your interactive whiteboard system.

   The ECP's power light turns solid green when the system starts.
2. Wait five minutes for the projector to warm up.
3. Press DOWN, UP, UP, LEFT, UP (DUULU) on the remote control to access the service menu.
4. Using the remote control, select the **Lamp Hour Reset** option, and then press **OK**.

   Both **Lamp Hour** values (**Standard** and **Economy**) are reset to zero.

   NOTE
   You're unable to reset the **Display Hour** value because it's the running total of hours that the projector has been in use.
5. Press the **Menu** button on the remote control.

   The *SMART UF55 Settings* menu appears.
6. Select to confirm that **Lamp Hours** has been reset to zero.

   Your system is ready for use.

Appendix A

Customer Support

Online Information and Support

Visit www.smarttech.com/support to view and download user's guides, how-to and troubleshooting articles, software and more.

Training

Visit www.smarttech.com/trainingcenter for training materials and information about our training services.

Technical Support

If you experience difficulty with your SMART product, please contact your local reseller before contacting SMART Technical Support. Your local reseller can resolve most issues without delay.

NOTE

To locate your local reseller, visit www2.smarttech.com/st/en-US/Where+to+Buy.

All SMART products include online, telephone, fax and e-mail support:

Online	www.smarttech.com/contactsupport
Telephone	+1.403.228.5940 or Toll Free 1.866.518.6791 (U.S./Canada) (Monday to Friday, 5 a.m. – 6 p.m. Mountain Time)
Fax	+1.403.806.1256
E-mail	support@smarttech.com

Shipping and Repair Status

Contact SMART's Return of Merchandise Authorization (RMA) group, Option 4, +1.866.518.6791, for shipping damage, missing part and repair status issues.

General Inquiries

Address	SMART Technologies 3636 Research Road NW Calgary, AB T2L 1Y1 CANADA
Switchboard	+1.403.245.0333 or Toll Free 1.888.42.SMART (U.S./Canada)
Fax	+1.403.228.2500
E-mail	info@smarttech.com

Warranty

Product warranty is governed by the terms and conditions of SMART's "Limited Equipment Warranty" that shipped with the SMART product at the time of purchase.

Registration

To help us serve you, register online at www.smarttech.com/registration.

Appendix B

Hardware Environmental Compliance

SMART Technologies supports global efforts to ensure that electronic equipment is manufactured, sold and disposed of in a safe and environmentally friendly manner.

Waste Electrical and Electronic Equipment Regulations (WEEE Directive)

Waste Electrical and Electronic Equipment regulations apply to all electrical and electronic equipment sold within the European Union.

When you dispose of any electrical or electronic equipment, including SMART Technologies products, we strongly encourage you to properly recycle the electronic product when it has reached end of its life. If you require further information, please contact your reseller or SMART Technologies for information on which recycling agency to contact.

Restriction of Certain Hazardous Substances (RoHS Directive)

This product meets the requirements of the European Union's Restriction of Certain Hazardous Substances (RoHS) Directive 2002/95/EC.

Consequently, this product also complies with other regulations that have arisen in various geographical areas, and that reference the European Union's RoHS directive.

Batteries

Batteries are regulated in many countries. Check with your reseller to find out how to recycle used batteries.

Packaging

Many countries have regulations restricting the use of certain heavy metals in product packaging. The packaging used by SMART Technologies to ship products complies with applicable packaging laws.

Covered Electronics Devices

Many U.S. states classify monitors as Covered Electronic Devices and regulate their disposal. Applicable SMART Technologies products meet the requirements of the Covered Electronic Devices regulations.

China's Electronic Information Products Regulations

China regulates products that are classified as EIP (Electronic Information Products). SMART Technologies products fall under this classification and meet the requirements for China's EIP regulations.

U.S. *Consumer Product Safety Improvement Act*

The United States has enacted the *Consumer Product Safety Improvement Act* which limits the lead (Pb) content in products. SMART Technologies is committed to complying with this initiative.

Index

A

adjusting
  default settings, *33*
  image adjustment options, *31*, *34*
  keystone alignment, *13*
  position adjustment options, *29*, *31*, *32*
automatically switching source inputs, *33*

B

batteries, *67*
before installing your SMART Board 600i3 or SBD600i3 interactive whiteboard system, *12*
before installing your system
  environmental requirements, *10*

C

cables
  harness cable (ECP), *4*
  optional accessories, *7*
Chinese regulations, *68*
cleaning, *52*
  mirror, *54*
  pen tray, *53*
  removing permanent marker stains, *53*
  your Unifi 55 projector, *54*
connecting
  connecting a host computer to the ECP, *21*, *27*
  digital and document cameras, *28*
  DVD players and VCR's, *28*
  peripheral visual or audio-visual devices, *28*
contact information, *66*
covered electronic devices, *68*
customer support, *65–66*

D

damage
  preventing, *52*
documentation, *65*

E

EIP regulations, *68*
environmental compliance, *See* hardware environmental compliance
eraser, *5*
European Union regulations, *67*
extended control panel (ECP)
  about, *4*
  connecting a host computer, *21*, *27*
  connecting peripheral audio-visual devices, *28*

G

general inquiries, *66*

H

hardware environmental compliance, *67*

I

important information, *i*
inquiries, *66*

installing
  adjusting keystone alignment, *13*
  environmental requirements, *10*

K

keystone
  definition, *13*

L

Limited Equipment Warranty, *66*

M

maintaining, *51*
mirror cleaning, *54*

O

online support, *65*

P

packaging, *68*
pen tray
  cleaning, *53*
  tools, *5*
position adjustment options, *29*

R

registration, *66*
regulatory compliance, *See* hardware environmental compliance
removing permanent marker stains, *53*
RoHS directive, *67*

S

safety warnings, *ii*
security
  securing the pen tray to the interactive whiteboard, *9*, *19*
serial number
  locating, *55*
SMART Board 600 or SBD600 series interactive whiteboard
  cleaning, *52*
  features, *3*
  optional accessories, *7*
SMART Board 600i3 or SBD600i3 interactive whiteboard system
  about, *1*
  connecting your computers, *26*
  features, *2*
  maintaining, *51*
  optional accessories, *6*
  recommended mounting height, *12*
  standard accessories, *5*
  transporting, *55*
SMART Notebook software, *22*
SMART technical support, *65*
starting up your system, *30*
support, *65–66*
system warning lights, *46*

T

technical support, *65*
training, *65*
troubleshooting
  warning lights, *46*
troubleshooting articles, *65*
turning on your system, *30*

U

U.S. regulations, *68*
Unifi 55 projector
  cleaning, *54*
  position adjustment settings, *29*
  remote control, *5*, *29*, *31*
  system features, *3*
  using, *31*
  won't turn on, *46*
user's guides, *65*
using
  image adjustment options, *34*
  selecting an input, *30*
  starting up your SMART Board 600i3 or SBD600i3 interactive whiteboard system, *30*
  using the remote control, *29*, *31*
  using your interactive whiteboard, *30*
  using your Unifi 55 projector, *31*
using your SMART Board 600i3 or SBD600i3 interactive whiteboard system, *29*

W

warning lights, *46*
warranty, *66*
WEEE directive, *67*
whiteboard pens, *5*

Toll Free 1.866.518.6791 (U.S./Canada)
or +1.403.228.5940
www.smarttech.com