myprojectorlamps.com

The most trusted, dependable name in projector lamp sales.

http://www.myprojectorlamps.com

http://www.myprojectorlamps.ca

http://www.myprojectorlamps.eu

The following projector manual has not been modified or altered in any way.

SIM2
Multimedia
USAER AND INSTALLATION MANUAL
HT3000
SIM2
10
YEARS
OF INNOVATION
460.554.000

1 REMOTE CONTROL AND KEYPAD

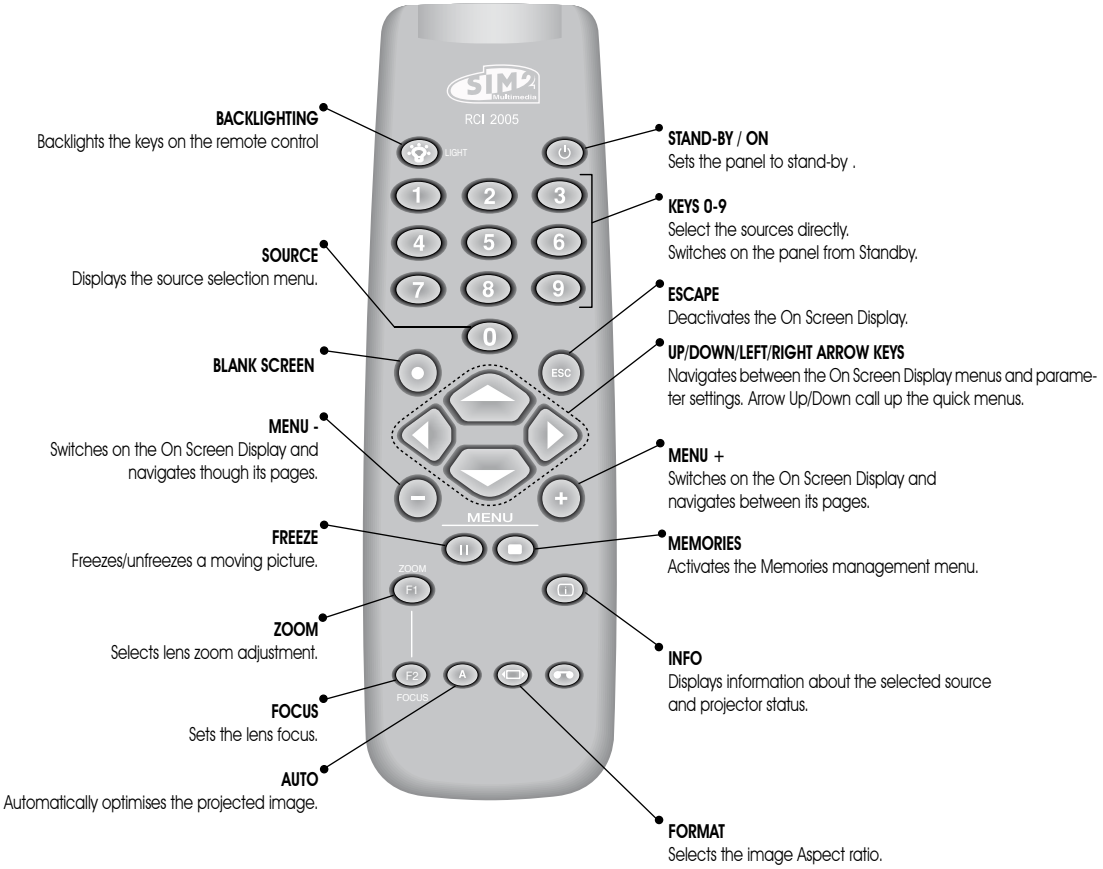

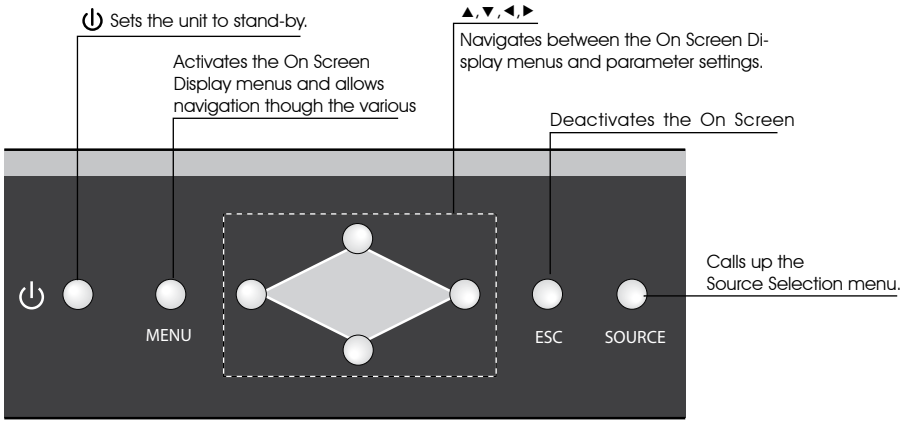

1 INTRODUCTION

The HT3000 projector represents the state of the art in image processing combined with the innovative DLP™ sytsem and outstanding optics.

Its range of inputs (1 Composite Video input, 1 S-Video input, 1 Components or RGB input, 1 graphic RGB input, 2 HDMI™ inputs) allow it to be connected to a wide range of analogue and digital sources: DVD players, video recorders, satellite and terrestrial receivers, computers, video game consoles, camcorders, etc.

Its image processing system allows optimum reproduction of a wide range of input signals, from interlaced video to high definition and digital graphics.
Faithful reproduction of signals at higher resolutions (such as high definition video and graphics) occurs without loss of information or reduction of image sharpness thanks to the processor's high pixel rate signal acquisition capabilities.

Different input signal resolutions can be adapted to match the specified screen resolution without loss of image quality, thanks to a generous selection of preset aspect ratios, some of which are user definable.

All picture adjustments can be made with the remote control interacting with a simple menu-activated On Screen Display; alternatively, the projector can be controlled by a domestic automation system via its serial port.

The appliance has been subjected to exhaustive operating tests by SIM2 to ensure maximum quality.
The projector bulb life should thus initially be around 30-60 hours.
Besides the usual checks, the Quality Control department also runs additional statistical tests before despatch.
In this instance the packaging may show signs of having been opened, and the hours operation of the lamp may be higher than the value required under standard procedures.

CONTENTS

1 INTRODUCTION 3
2 IMPORTANT SAFETY INSTRUCTIONS 4
3 UNPACKING 7
4 INSTALLATION
8
5 SWITCHING THE PROJECTOR ON AND OFF 10
6 CONNECTIONS 10
7 CONNECTIONS BOARD 12
8 REMOTE CONTROL 14
9 ON SCREEN MENU 15
10 CLEANING AND MAINTENANCE 26
11 COMMON PROBLEMS 26
12 OPTIONAL ACCESSORIES 27
A - technical specifications 27
B - Structure of the on screen menu 28
C- Dimensions 30
D- Projection distance 31

MANUAL VERSION 1.3 (23-07-2006)

DLP and DMD are registered trademarks of Texas Instruments.

HDMI, the HDMI logo and the expression High-Definition Multimedia Interface are trade marks or registered marks of HDMI licensing LLC

2 IMPORTANT SAFETY INSTRUCTIONS

This symbol indicates the possible electric shock hazard associated with uninsulated live components in the interior of the unit.

This symbol indicates the presence of important instructions regarding the use and maintenance of the product.

CAUTION
To reduce the risk of electric shock, disconnect the power supply cable on the rear panel before removing the top cover of the projector.
For technical assistance refer to trained personnel authorised by the manufacturer.

LAMP WARNING
If the lamp should suddenly burst with a loud bang, air the room thoroughly before using it.
Do not attempt to replace the bulb: contact your local service centre for the replacement.

ENVIRONMENTAL INFORMATION
This product contains materials derived from natural resources during its manufacture. It may contain materials which constitute a health and environmental hazard. To prevent noxious materials being released into the environment and to promote the use of natural materials, SIM2 Multimedia provides the following information regarding the disposal and recyclig of the product. Electrical and electronic waste materials (WEE) should never be disposed of in normal residential waste disposal facliities. The label on the product, shown here, indicating a crossed out garbage can, is intended to remind you that the product requires special handling at the end of its service life.
Materials such as glass, plastic and some chemical compunds are recoverable and can be recycled for reuse. Please observe the following instructions:

1. When you no longer wish to keep your electrical and electroic equipment, take it to your local waste disposal facility for recycling.

2. You may return your old equipment to your dealer when you buy a new product which is equivalent or has the same functions as the old one. Call SIM2 Multimedia to find your local dealer.

3. If you need more information regarding recycling, reuse and product exchanges, please contact customer service on the number given in the manual.

Please read the instructions regarding recycling of the internal and external packaging (including that used for shipping) with which the product was delivered. With your help, we can reduce the amount of environmental resources consumed in making electric and electronic equipment, reduce the use of dumps for used equipment and, in general, improve our quality of life by making sure that hazardous materials are correctly scrapped.

Incorrect treatment of the product at the end of its service life and failure to follows the above disposal instructions are punishable under local legislation.

Read all chapters of this manual carefully before switching on the projector. This manual provides basic instructions for using the HT3000 system. Installation, preliinary adjustments and procedures that necessitate the removal of the top cover and contact with electrical components must be done by authorised, trained technicians. To ensure safe operation and long term reliability use exclusively the power cables supplied by the manufacturer. Observe all warnings and precautions.

PROJECTOR

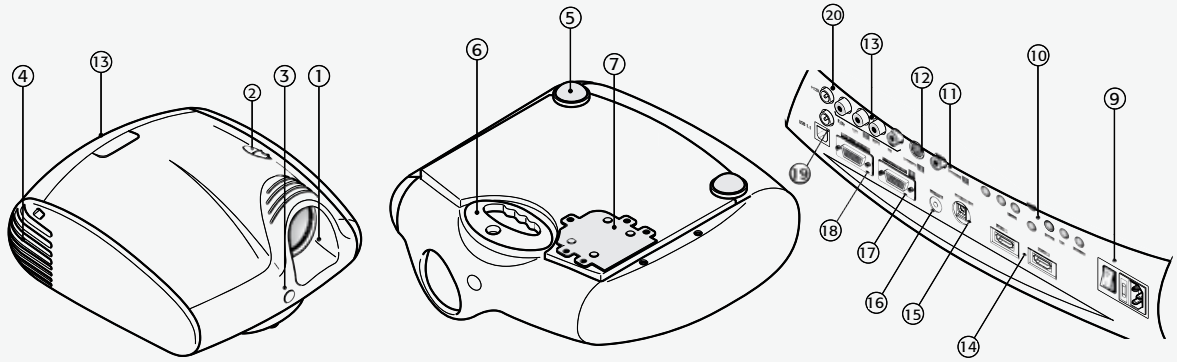

1 Projection lens.
2 Lens shift knob.
3 Remote control IR sensor on front of unit.
4 Cooling air inlet vents.
5 Adjustable feet.
6 Adjustable carry-handle.
7 Bulb compartment.
8 Fused power socket.
9 Main power switch.
10 Control keypad
11 Composite video input.
12 S-Video input.
13 RGB / YCrCb input.
14 2 HDMI input
15 Audio output.
16 Remote control input
17 VGA input
18 RS232 serial interface.
19 USB 1.1 interface
20 Motorised screen control outputs.

- **Read this manual carefully and keep it in a safe place for future consultation.**
  This manual contains important information on how to install and use this equipment correctly. Before using the equipment, read the safety prescriptions and instructions carefully. Keep the manual for future consultation.

- **Do not touch internal parts of the units**
  Inside the cabinet there are electrical parts carrying dangerously high voltages and parts operating at high temperature. Never open the cabinet. Entrust all servicing and repair work to an authorised Service Centre. Opening the cabinet voids the warranty.

- **Disconnecting the appliance from the power supply.**
  The device which disconnects the unit from the mains is the power plug. Ensure that the power cable plugs and the electrical mains socket outlets are easily accessible during installation operations. Pull the plug, not the cable, to disconnect the unit from the mains.
- **Use only the specified power supply.**
  Connect the units to a mains electrical supply with rated voltage of between 100-240 VAC, 50/60 Hz and equipped with a protective earth connection. If you are not sure of your domestic mains rating, contact an electrician. Take care to avoid overloading the power socket and any extension leads.

- **Connection of the units to the mains power supply.**
  Connect the unit as shown in Fig. 2.

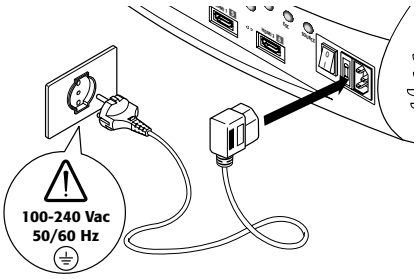

Fig.2

- **Changing the fuses.**
  Before changing the fuse disconnect the unit from the mains power supply.
  The fuse compartment is next to the power supply connector (Fig. 3). Remove the fuse holder (2) with a flat head screwdriver and replace the fuse (3). Fit a new spare fuse (4). Use only T 5A H fuses.

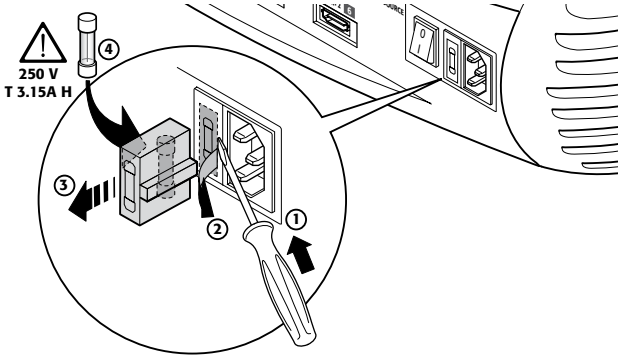

Fig.3

- **Be careful with cables.**
  Make certain cables are routed so that people will not be impeded or tripped up.
  Keep all cables away from children.
  Install the unit as close to the wall socket as possible. Avoid stepping on power cables, make certain they do not become tangled, and never jerk or tug them; do not expose them to sources of heat, and make sure they do are not knotted or crimped. If the power cables become damaged, stop using the system and request the assistance of an authorised technician.

- **Disconnect the unit from the mains power supply in the event of electrical storms and when not in use.**
  To prevent damage from lightning strikes in the vicinity, disconnect the unit during storms or when the sytsem is going to be left unused for a long time.

- **Avoid contact with liquids and exposure to damp.**
  Do not use the unit near to water (sinks, tubs, etc.); do not place objects containing liquids on or near to the unit and do not expose it to rain, humidity, drops of water or sprays; do not use water or liquid detergent to clean it.

- **Do not allow the unit to overheat.**
  To prevent this, allow a free space of at least 40 cm around the back of the projector.
  Do not block the ventilation slots.
  Do not place the unit near to heat sources such as ovens, radiators or other devices (including amplifiers).
  Do not place the unit in a restricted area (shelving units, bookshelves, etc.) and in general avoid placing it in poorly ventilated areas as this can lead to overheating.

- **Never look directly at the projection lamp.**
  Never look directly into the lamp when it is on as the intense light can damage your eyes. Take particular care that children cannot do so.

- **Take special care regarding the movements of the lens.**
  Do not place objects in the slots on the side of the lens, and also ensure that the lens's horizontal and vertical movements are unimpeded by external objects.

- **Position the unit on a stable surface.**
  Place the projector on a stable surface or use the provided ceiling mounting bracket.
  Never place the projector on its side or rear, lens or top panel.

- **Do not insert objects through the openings in the unit.**
  Make sure that no objects are inserted inside the units. If this should occur, disconnect the unit from the power supply immediately and call an authorised technician.

- **Energy savings.**
  Disconnect the power supply when the projector is not in use. This will considerably reduce power consumption and also lengthen the service life of the unit's electrical circuitry.

3 UNPACKING

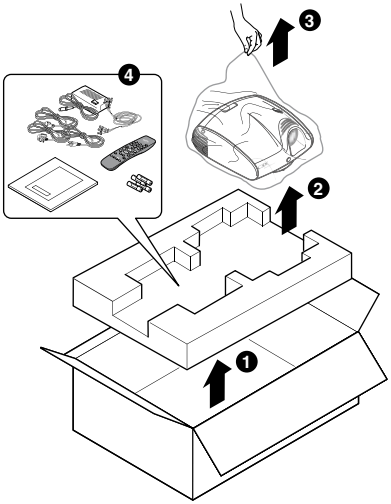

Fig.4

To remove the HT3000 system from its carton follow the diagrams (Fig. 4).

Keep the carton for use when transporting or shipping the unit.

CONTENTS OF PACKAGE

- the projector
- Remote control
- four 1.5V AAA batteries (for remote control)
- three power cables (EU, UK, USA) for the projector
- the user manual.
- Lens shift key

If anything is missing, immediately inform your dealer.

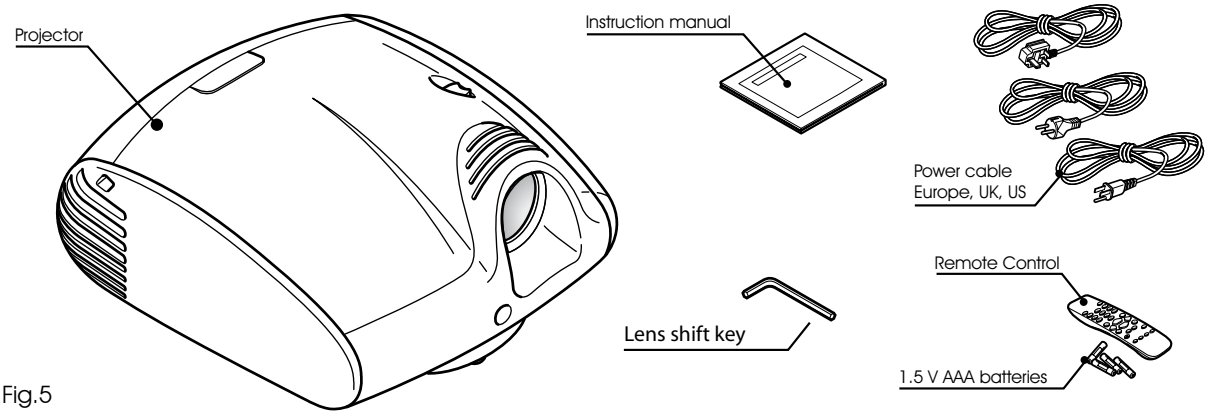

Fig.5

4 INSTALLATION

Position the projector on a stable, suitable platform or utilise the optional bracket for a fixed ceiling installation.

WARNING: If using the ceiling mount bracket, scrupulously observe the safety instructions included with the bracket itself. If using a bracket other than that supplied by SIM2 Multimedia, make sure that the projector is at least 65 mm below the ceiling and that the bracket does not obstruct the air vents (intake and outlet).

If the projected image is not level, adjust the feet on its base to obtain a level position, lining up the base of the projected image to the base of the projection screen (Fig. 6).

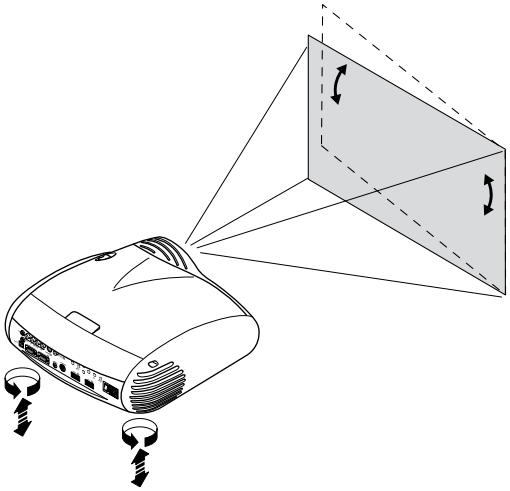

Fig. 6

Place the projector at the desired distance from the screen: the size of the projected image is a function of the distance between the lens and the screen and the lens zoom setting.
Use the motor zoom (Fig. 7) to zoom the projected image in and out.
Use the motor focus function (Fig. 7) to obtain a clear image; if the image is correctly focused, you should be able to see each single pixel of the projected image when close to the screen (Fig. 7).

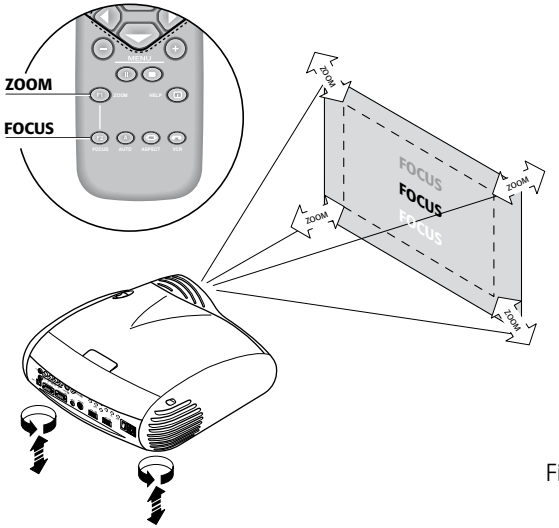

Fig. 7

If this displacement is insufficient, tilt the projector and correct the keystone error with the Keystone adjustment in the Installation menu (Fig. 8a).

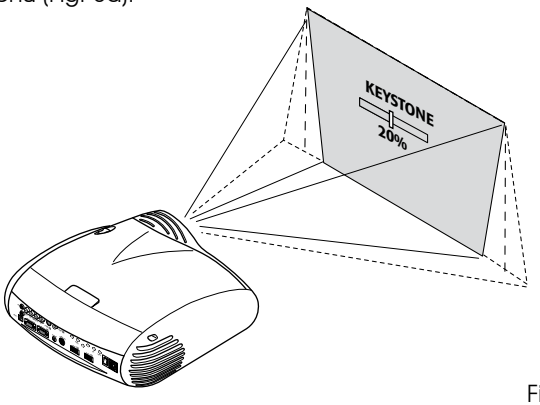

Fig. 8

The Orientation adjustment in the Set up menu allows you to reverse the image vertically and horizontally (Fig. 9), to allow the projector to be used for desktop front, ceiling front, desktop rear and ceiling rear installations (Fig. 9).

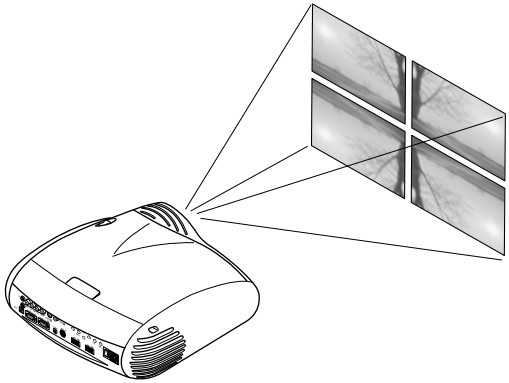

Fig. 9

To activate an electric motorised screen a 12 Volt output is provided at the rear of the projector (Fig. 10).
The output is activated (Voltage: 12 Vdc) when the projector is switched on and is de-activated (no Voltage output) when the projector is in stand-by mode.
You can also use black motirised curtains to delimit the screen when the projected image aspect ratio changes (Fig. 11a). This option is controlled via the output at the rear of the projector.

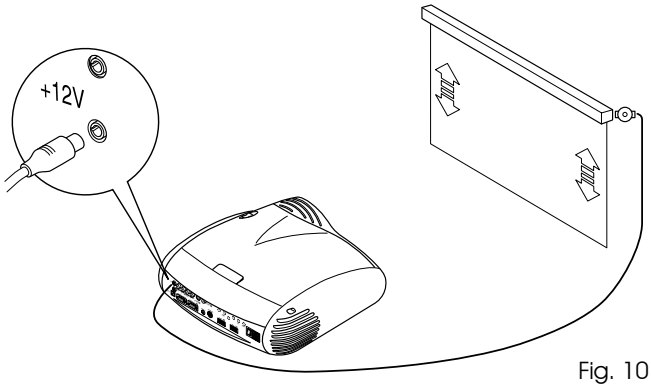

Fig. 10

For rear projection the screen must be translucent.
For front projection, we recommend the use of a screen with black matt borders to contain the projected image.

Preferably use a unit gain screen; high gain screens are only effective when used with a small group of viewers close to the screen's axis.
Prevent ambient light shining directly on the screen during projection as this will reduce the contrast of the projected image.
Furniture and other objects with reflecting surfaces, as well as light coloured walls should be avoided, as they are likely to interfere with the screen's characteristics.

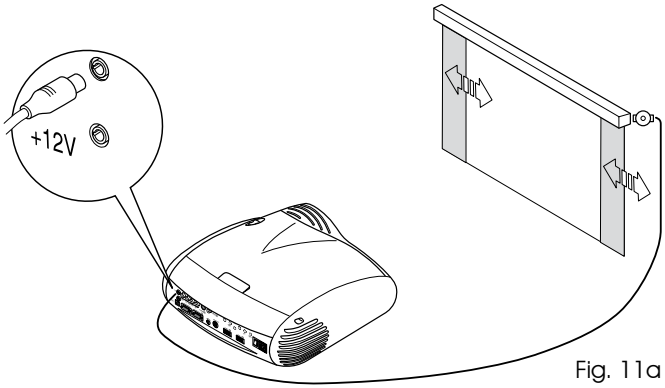

Fig. 11a

The manual lens shift adjustment allows the projected image to be moved vertically, up or down, in relation to the centre of the screen; the maximum adjustment being equal to half the height of the image in either direction (Fig. 11b).

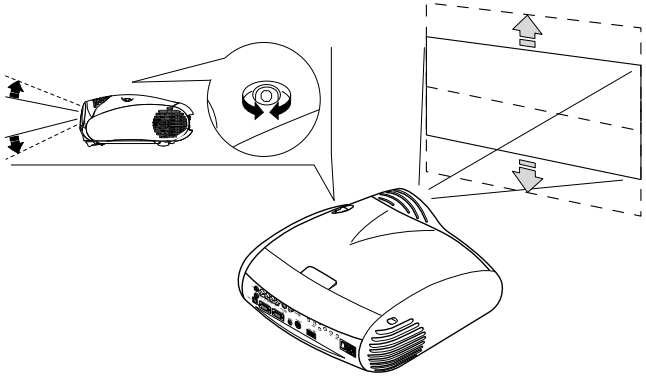

Fig. 11b

5 SWITCHING THE PROJECTOR ON AND OFF

WARNING: Connect the projector to a power supply with a nominal voltage within the following values: 100-240 V AC, 50/60 Hz. It must be earthed (Fig. 12).

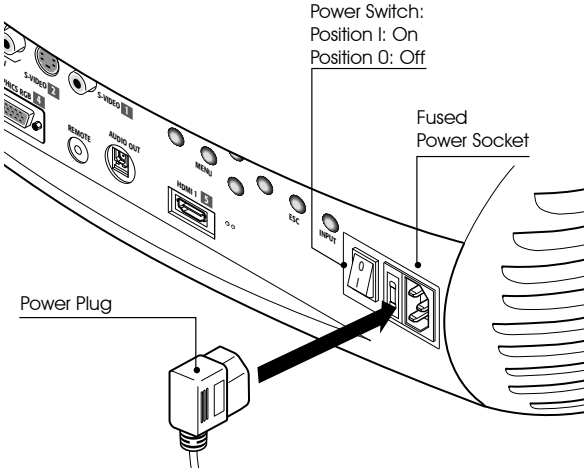

Fig. 12

In position **I** the projector will initialise itself (red and green leds on) and then goes into standby mode (red led on) (Fig. 13).

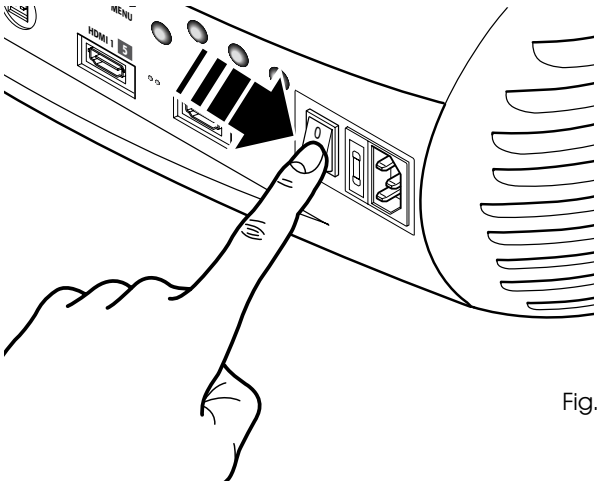

Fig. 13

SWITCH ON FROM STANDBY

With the remote control: press one of the keys **1...9 or with 0.**
With the keypad: press the ON/OFF button.

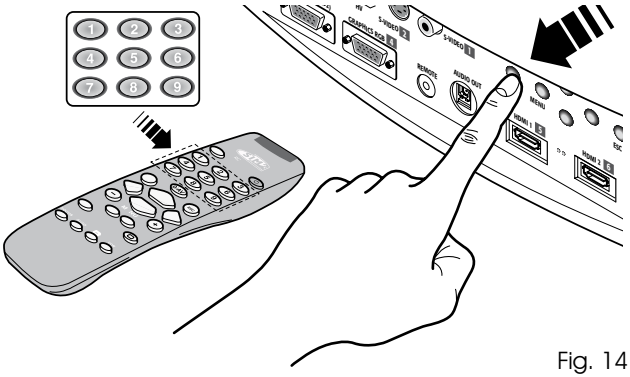

Fig. 14

When the unit is switched on from standby the lamp switches on; after a brief period of warming up, the image displays (blue led on). The projected image comes from the input selected when the unit was last switched off (Fig. 14).
If a very short time has passed since the unit was last switched off, the lamp may not switch on beause it is too hot.
Just wait a few minutes for the lamp to cool down sufficiently.

SWITCHING OFF AND RETURNING TO STANDBY

With the remote control: press ⏻.
With the keypad: press ⏻.
When switching off, the projector goes into stand-by mode and stores the input selection at the time of switch-off.
The fans keep running until the lamp cools down (green and red leds on), after which they automatically switch off. Do not switch off the projector with the power switch until the fans have stopped running.

Status	Led blue	Led red	Logo Backlit
Initialisation	■	■	Blue Color
Standby	□	□	Red Color
On	■	□	Off / Blue Color (*)
Cooling	✸	✸	Red Color
Overtemperature	□	■	Red Color
Fan Error	□	✸	Red Color

□ : Off ■ : On ✸ : Flashing (*): selectable from OSD

Table 1

6 CONNECTIONS

To obtain the best performance from your projector, we recommend the use of good quality "video cables" to the various signal sources (75 ohm Impedance).

Poor quality cables will cause inferior picture performance.

For optimum connectivity we recommend you follow these simple steps:

- With exception of coaxial RCA/Phono type connectors, always double-check that the plug is inserted the correct way round to avoid damaging the plugs or the sockets on the projector (Fig. 15).
- Remove cables by the plug and do not pull on the cable itself.
- Avoid tangled cables.
- Position the cables carefully to avoid a trip hazard - especially in low light areas.

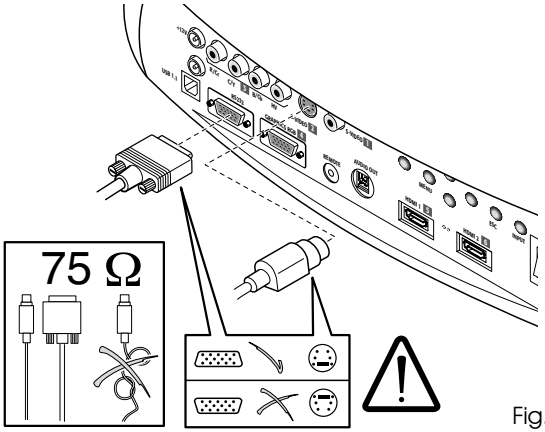

Fig. 15

HT3000 - Connection panel

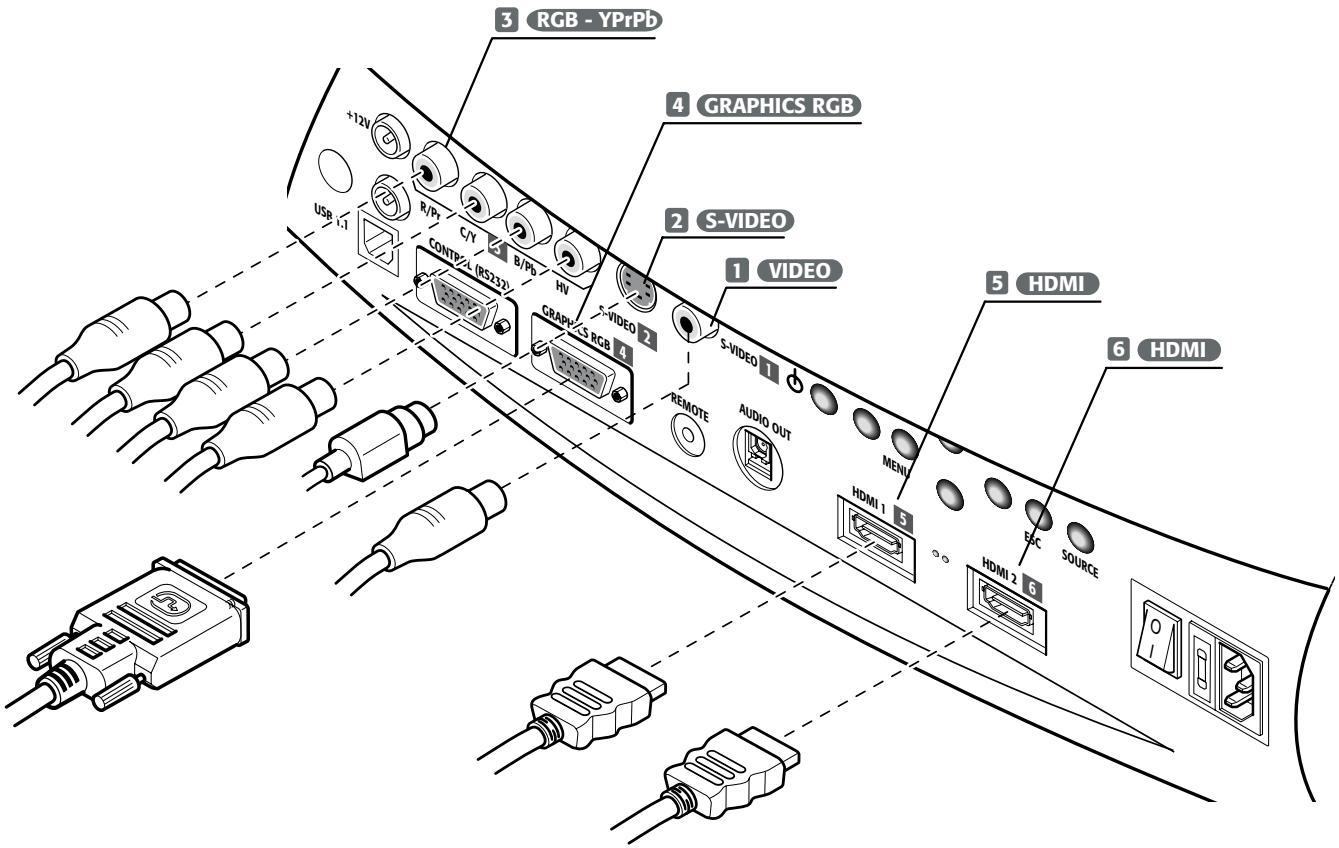

1 2
Television receiver
DVD player
VCR
Videocamera
Video game console

3
Television receiver
HDTV receiver
DVD player
VCR
Video game console

4
Computer

5 6
DVD player
HDTV receiver

Fig.16

COMPOSITE VIDEO 1

Fit an RCA connector with a Composite Video (CVBS) signal to this input.
The output connector on the external appliance is normally coloured yellow and will often be labelled VIDEO.
Other signal and socket formats may be preferable (because they give better image quality), but this type of output socket is still the most commonly used, and nearly all television receivers, video recorders, DVD players and camcorders, etc. use it.

S-VIDEO 2

Fit a mini-DIN connector with an S-Video signal to this input.
The corresponding output at the external device is normally identifiable by the labels S-VIDEO or Y/C.
This type is nearly as common as Composite Video, and is preferable to the latter, since it gives higher image quality.

RGB/YPRPB 3

These inputs use a set of 4 RCA connectors.
RGB and Component signals can be applied to each set of connectors.
RGB signals can have composite synchronisation on the green signal (RGsB), or on the HV signal.
Connect the R, G, B outputs of the source to the respective R, G, B inputs of the HT3000 (taking care not to invert the positions) and any synchronisation signals to the HV.
When hooking up, use the colours of the RCA connectors as an aid as follows: the R connector is red, G is green, B is blue and HV is white.
You can use a SCART to RCA adapter cable to connect the RGB signal from a source equipped with a SCART output to this input.
The Component signals connect to the Y, Pr and Pb inputs: take care that the inputs correspond to the outputs on the source device.
Since these can be labelled differently, refer to Table 1 to establish the correspondence between the various signals. As indicated in the table, the colours of the connectors can also be of help.
Only horizontal scanning frequencies of 15 kHz (standard video resolution) or 32 kHz (high definition video, with progressive scanning) can be applied to this input.
Progressive signals usually provide better quality than interlaced signals, but if the source features both progressive and deinterlaced signal outputs it is good practice to compare the quality of the pictures reproduced by the HT3000 in the two cases: the deinterlacing performed by the HT3000 is often more effective than that performed by the source itself.

GRAPHICS RGB 4

This input should be connected to an RGB-type video or graphic signal using a cable with a DB15HD type connector.
The signal source device (typically a personal computer or game console) must be able to provide separate H/V synchronisation or composite H+V synchronisation.

HDMI™ 5 6

HDMI™ (High Definition Multimedia Interface) integrates an uncompressed high definition video signal with a multichannel audio signal and allows exchange of control data between the video source and the HT3000.
The HDMI input allows connection to video sources that use the HDCP (High-Bandwidth Digital Content Protection) protocol to protect their contents.
Once the video source has been connected to the HDMI input, internal processing by the HT3000 separates the video information from the audio information. The audio information is made available on a digital output with a female TOSLINK connector in compliance with the S/PDIF standard.
You can use a DVI-D > HDMI adapter cable to connect the DVI-D signal from a source equipped with a DVI-D output.

MOTORISED SCREEN OUTPUTS

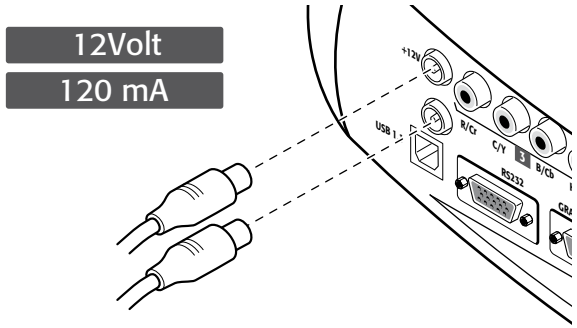

Fig. 17

The projector is equipped with two outputs (Voltage: 12 Vdc) for motorised projection screen and screen masking systems, used for masking off the projection area to match the projected image aspect ratio (Fig. 17).
The +12V output is activated when the projector is switched on (blue LED on) and is de-activated when the projector is in standby mode (red LED on). The output can be set with the "Screen control" adjustment in the "Aspect" menu. This output allows reduction in the area of a 16:9 screen, into a 4:3 format, by activating a horizontal screen masking system.

RS232 INTERFACE CONNECTOR

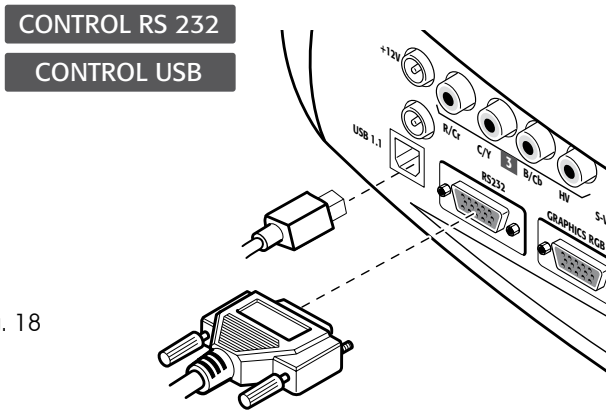

Fig. 18

The projector can be controlled from a PC: simply hookup the interface connector to a PC's RS232 serial cable or to a PC's USB 1.1 cable.

8 REMOTE CONTROL

The remote control requires four 1.5 V batteries, size AAA.
Insert the batteries, taking care to match the polarity, as indicated in the battery compartment in the handset (Fig. 23).
Change the batteries in the remote control if experiencing difficulty in sending commands to the projector.
Remove batteries from the remote control if it is not to be used for a long period of time. The batteries are prone to leak and corrode the remote control's circuits.
The remote control sends commands to the projector via infrared signals.
The projector is equipped with an infrared sensor on its front panel and can therefore be controlled by pointing the remote control towards the projection screen; the IR beam reflects off the screen towards the projector (Fig. 19).
There is another infrared sensor in the rear of projector.

Do not place objects between the remote control and the receiver on the projector, as this can prevent the remote from working.

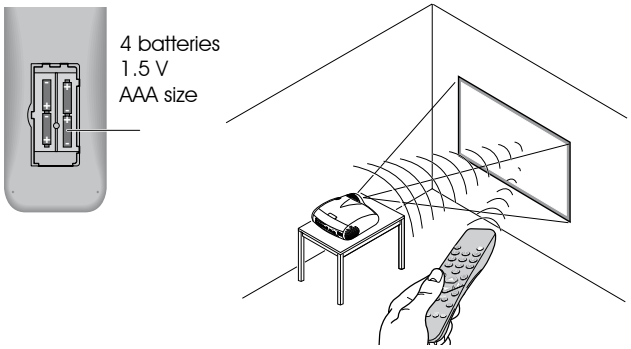

Fig. 19

9 ON SCREEN MENU

All system functions can be operated from the keypad or remote control, with the aid of a complete, user-friendly on screen menu.

INPUTS

The input selection menu is called by pressing 0 on the remote control or with the keypad SOURCE key. To select an input, scroll through the list with the ▲ e ▼ keys until the required input is highlighted, then press ►.
Display of the input selection menu is terminated by pressing the ESC key or when the On-Screen Menu display timeout interval (set in the Menu Setup) has elapsed orr after the signal's recognising.
The inputs can receive RGB and YCrCb signals, at 15 kHz, 32 kHz or higher. The input and type of signal (RGB or YPrPB) are set in the pull down menu at the right of the symbol < a seguito della pressione del tasto ◄ (Fig. 20).

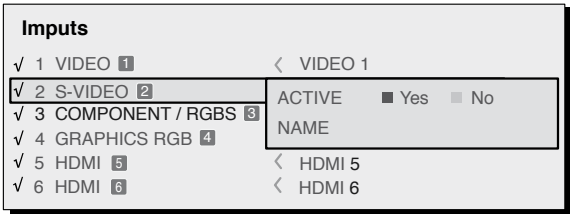

Fig.20

HDMI 1-2 input can receive the signals from DVI-D sources.
During the short time it takes to find the signal, a box appears showing the signal requested. As soon as the signal is shown in the box additional information is displayed concerning the video standard (for video signals) or resolution (for graphic signals), format and the eventual user's memorie.
This informations can be recolled by pressing numerical key that it corresponds at the selected source.
In the SETUP menu you can select whether to display this information or not; for further information see SOURCE INFORMATION in the MENU section of chapter ADDITIONAL INFORMATION.

MAIN MENU

To access the main menu of the On Screen Display press the MENU key on the keypad or the MENU+ or MENU- key on the remote control.
The main menu is divided into four windows, PICTURE, IMAGE, SETUP and MENU, in which the various adjustments are grouped according to the frequency of use. Use the ▲ and ▼ keys to select the line corresponding to the adjustment you wish to make (Fig. 21).

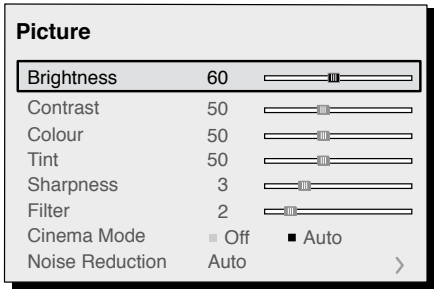

Fig.21

The various menus only offer the relevant adjustments in accordance with the type of input signal displayed (e.g. certain typical adjustments for video signals, not necessary for graphic signals, do not appear on the menus, and vice versa).
Some adjustments (e.g. BRIGHTNESS and CONTRAST) are associated with a numerical value that can be varied within the set limits using the ◄ and ► keys.
For others (e.g. VIDEO TYPE) you can choose between two options presented on the same line and selectable using the keys ◄ and ► Fig.22a/b

.

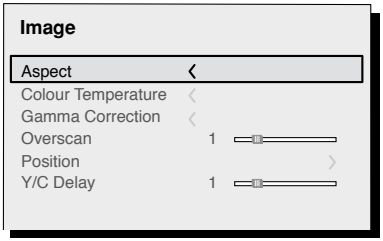

Fig.22a

To access these submenus, press the <, mentre l'uscita ed il ritorno al livello superiore avviene con la pressione dei tasti MENU+/- key.
Press ESC on the remote control or keypad to interrupt the menu display or wait for it to disappear automatically after the number of seconds set on theSET-UP page.

PICTURE

This menu includes all image adjustment settings. Adjustments that are not available for a given input do not appear on the menu. Table 4 summarises the adjustments available for each input. For a full listing of the menu, refer to paragraph STRUCTURE OF ON SCREEN MENUS in the chapterADDITIONAL INFORMATION.

BRIGHTNESS

Use this control to adjust the darker areas of the picture (black level), without significantly affecting bright areas. Increasing the value will give more detail in darker parts of the picture. For correct adjustment it may prove useful to display a grey scale with at least twenty bands. Now try to reduce the brightness of the black band as much as possible while ensuring that it can still be distinguished from the adjacent band with brightness slightly higher than black. Alternatively use a scene composed of black objects alongside other dark coloured objects and try to keep all the objects separately identifiable.

CONTRAST

Use this control to adjust the image's white level without affecting its dark areas.
For correct adjustment it may prove useful to display a grey scale with at least twenty bands. Now try to increase the brightness of the white band as much as possible while ensuring that it can still be distinguished from the adjacent band with brightness slightly less than white. Alternatively use a scene composed of well-lit white objects surrounded by light objects with lower level lighting, and try to ensure that all the objects remain separately identifiable.

COLOUR

This control (also called Saturation) increases or decreases the picture colour intensity. When set to zero, colour images will be shown in black and white. Increase the value until the colours appear natural: suitable references include skin tones and grass in landscape shots.

TINT

Controls the purity of colours. Basically determines the red-green ratio of the picture.
Decreasing the value increases the red content of the image, increasing it increases the green. For this adjustment use skin tones or a test card image with colour bars as a reference.

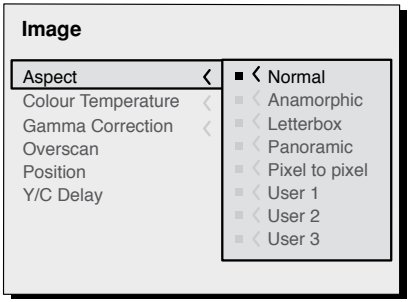

Fig.22b

SHARPNESS

This adjustment serves to modulate the signal to increase or decrease the level of picture detail.
When the sharpness value is reduced the image details appear less pronounced, while increasing the value raises image definition, making the outline of objects sharper.
Note that an excessively high value may result in a 'noisy' picture and the edges of objects may appear unnaturally clearly defined.

SHARPNESS MODE

This allows you to select the type of processing associated with sharpness adjustment. For an interlaced or progressive video signal, set to VIDEO; for PC graphics signals, set to GRAPHICS.
Sets the system to receive graphics signals rather than video signals. If the VIDEO option is set, it applies Noise Reduction to increase the clarity of the image. The GRAPHICS option deactivates noise reduction.

FILTER

This allows you to select the mode in which the input signal is processed. Selecting the most appropriate value for a given input signal ensures the best horizontal and vertical definition and makes the picture sharper.

CINEMA MODE

Use this option if the video signal source is a movie film (obtained from a Teleciné device with 3:2 or 2:2 pull-down). In this case a deinterlace algorithm optimized for this type of signal is applied.
Selecting AUTO mode causes the de-interlacer to analyse signal characteristics and apply the correct deinterlace mode automatically.

Selecting the NO option causes the de-interlacer to apply a Motion compensated algorithm optimized for video camera signals.

NOISE REDUCTION
This adjustment serves to select the noise reduction filter value.
In this latter case, simply click on the slider and set the value with the ◄ and ► keys on the remote control.

IMAGE

This menu features adjustments relating to picture position, aspect ratio, magnification etc.

ASPECT
This adjustment allows you to change the dimensions and aspect ratio (relationship between width and height) of the displayed image. There are five preset aspects available and three personalised aspects (with user-settable parameters). You can select a different aspect for each source: the selected aspect ratio will be automatically applied the next time the relative source is called.
You can also select the required aspect ratio by repeatedly pressing the key ◄■►, or by pressing ◄■► and a numerical key (1…8).The following aspects are available:

Adjustments	Inputs					
	Video S-Video	RGBS 15kHz YCrCb 15kHz	RGBS	YCrCb	RGB Grafico	HDMI™
Brightness	●	●	●	●	●	●
Contrast	●	●	●	●	●	●
Colour	●	●	-	●	-	-
Tint	o	●	-	●	-	-
Sharpness	●	●	●	●	●	●
Sharpness Mode	-	-	●	●	●	●
Filter	●	●	-	-	-	-
Cinema Mode	●	●	-	-	-	-
Video Type	●	●	-	-	-	-
Noise reduction	●	●	-	-	-	-
Flesh tone correction	●	●	-	-	-	-

o Present only if the Video Standard is NTSC

NORMAL: projects the image occupying the full height of the screen while maintaining the aspect ratio of the input signal. When the input signal aspect ratio is 4:3 black vertical bands are displayed on the right and left of the picture.

ANAMORPHIC: correctly displays a 16:9 image.

LETTERBOX: serves to display a 4:3 letterbox image (with source signal having black bands above and below the picture) so that it fills the 16:9 screen and maintains the correct aspect ratio.

PANORAMIC: widens the 4:3 image and cuts off a strip from the top and bottom. Panoramic is ideal for displaying a 4:3 image on the 16:9 screen of the Display.

SUBTITLES: raises the image, thus making space for subtitles.

PIXEL TO PIXEL: runs a pixel to pixel mapping of any image, without adapting to the screen. The image is projected in the centre of the screen and if its horizontal and/or vertical dimensions are smaller than the display, it is bounded by vertical and/or horizontal black bands.

USER 1, 2, 3: use this option if none of the others are satisfactory. The User formulas give you the ability to continuously adjust the picture size horizontally and vertically.

COLOR TEMPERATURE
Changes the colour balance of the image.
The colour temperature setting is made by setting the white point in the CIE chromaticity diagram. The system enables you to set the white point in a grid of 36 points in the neutral colour zone (Fig. 23).
Moving it horizontally changes the correlated colour temperature, with the low temperatures to the right (more red) and high temperatures to the left (more blue). The points on the lowest horizontal line (Fig.24) represent the colours on the black body curve.
There is 4 predefined colour temperature setting and another USER setting that allows the manual regulation.

- HIGHT - MEDIUM - LOW
- LIGHT BOOST (no correction, maximum possible light)
- USER

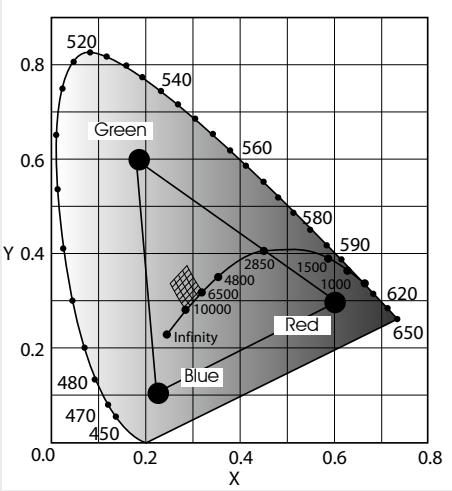

Fig. 23

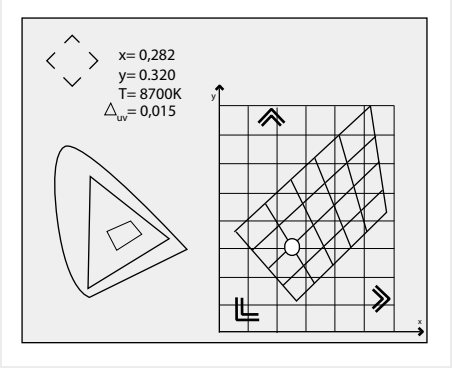

Fig. 24

The colour temperature is constant on the vertical lines, but is more or less different from the black body curve. This means that the higher points of the graph are more green. On the contrary, the lower points of the graphic yield a more purple image.

GAMMA CORRECTION

Determines the system's response to the grey scale, emphasising or attenuating the different grades of brightness (blacks, dark, medium, light grey, whites) in the projected image.
The projector has a range of gamma functions which enable you to display any image to the best effect for the type of video source, the ambient lighting and your subjective preferences.

There are 4 sets of gamma curves: Standard (ST), Enhanced SIM2 (EN) and Graphics (GR), User. The Standard curve has been defined for general use, and is set for videocameras, digital cameras, and for viewing films or photos on your PC. The Enhanced set is suitable for watching movies. The Graphics set is suited to displaying synthetic graphics (PC, CAD, PC presentations, etc.). User enables you to define your own curve. You can thus select the coefficient which determines the curve.

Table 5 - Gamma correction settings

Gamma functions ***Standard***	ST1 ST2 ST3 ST4 ST5	For general use
Gamma functions ***Enhanced SIM2***	EN1	Suited to displaying images from videocameras, digital cameras or TV studios in high ambient light.
	EN2	Suited to displaying images from videocameras, digital cameras or TV studios in low ambient light.
	EN3	Suited to displaying cinematographic material in high ambient.
	EN4	Suited to displaying cinematographic material in moderate ambient.
	EN5	Suited to displaying cinematographic material in controlled ambient light.
Gamma functions ***Graphics***	G1	Suited to displaying graphic images (e.g. Windows desktop) in moderate ambient light.
	G2	Suited to displaying graphic images in moderate controlled light.

Values from 1.5 to 2.2 allow you to emphasise the detail of dark images, but reduce overall contrast. Values higher than 2.2 increase overall contrast, but reduce the detail of dark areas. For the most common video sources, the overscanning value can be in the range (no overscanning) to 32 (maximum). The resulting image always maintains the selected aspect irrespective of the selected overscan value.

POSITION

Use this adjustment to position the image vertically and horizontally. Determines the aspect ratio of the projected image.
These parameters do not normally require adjustment because the system checks the input signal and automatically sets the most suitable values. However, if the image is not perfectly centralised it may prove useful to request the system to repeat the input signal analysis and image positioning, calling the automatic control procedure with button A on the remote control or the AUTObutton on the keypad. When this procedure is called it is helpful to have a while or light coloured background on the screen in the current picture.

FREQUENCY/PHASE

These adjustments, available for progressive signals and for signals from a PC, ensure correspondence between the number of pixels making up the signal and the number of pixels that make up the projected image.
These parameters do not normally require adjustment because the system checks the input signal and automatically sets the most suitable values. If however the image is disturbed (loss of resolution between equidistant vertical bands or instability and lack of detail in thin vertical lines) it may help to ask the system to rerun the input signal analysis and set the best parameters by calling up the automatic adjustment function with A on the remote control or AUTO on the keypad.
If the automatic procedure fails to have the required effect, enter the frequency and phase values manually and approach the screen sufficiently to observe the effects of the adjustments.

OVERSCAN

Eliminates irregularities around the outer borders of the image.
Some less accurate sources may produce an image with uneven borders; thanks to the overscan function these imperfections can be moved to outside the displayed area. Il parameter to 2.2, typically yields pleasant, contrasty images.

Y/C DELAY

In the case of Video and S-Video signals, it may be necessary to correct horizontal colour misalignment within the projected image. For a given video standard (e.g. PAL or NTSC) the stored value does not normally require further fine-tuning, unless the source or connection cable has changed.

SETUP

The setup menu contains less frequently used adjustments that may be required during installation (e.g. On Screen Display language selection or the display of Test Patterns).

ORIENTATION

Reverse the image vertically and horizontally to best fit the installation: i.e. desktop front, ceiling front, desktop rear and ceiling rear (Fig.25).

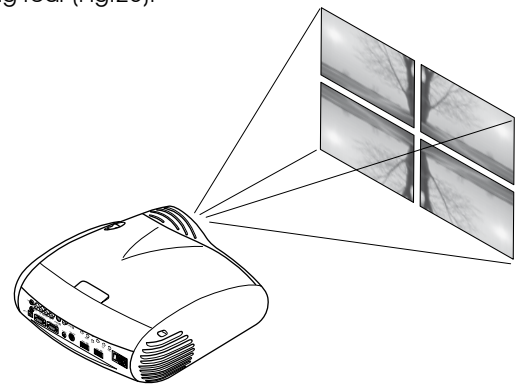

Fig.25

VERTICAL KEYSTONE

To get the best image quality, we recommend installing the image on a surface which is perpendicular to the screen. If the projected image is not level, adjust the feet on its base to obtain a level position, lining up the base of the projected image to the base of the projection screen (Fig.26).

If this adjustment is insufficient to centre the image, tilt the projector and use the Vertical/horizontal keystone adjustment to compensate for the resulting distortion.

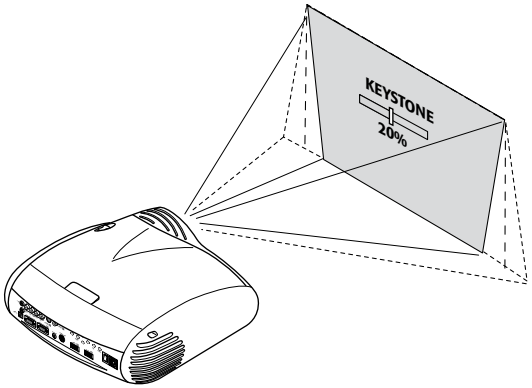

Fig.26

POWER ON

If selected (AUTO), this option allows the system when the projector is connected to the mains power supply.
In STANDBY mode the projector remain in STANDBY mode and awaits the power-up command from the remote control or keypad.

TEST PATTERNS

Displays a series of five test patterns, which are useful when installing the system and checking basic functions. Use the ◄ and ► keys to browse through the test patterns (Fig. 27).

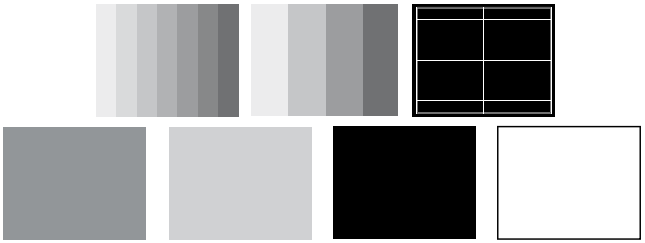

Fig.27

INITIAL SETTINGS

Reconfigures the projector to original factory settings except Position, Orientation, Y/C Delay, Zoom and Focus (Fig. 28).

Fig.28

MENUS

LANGUAGE

It allow to select the languages available for the On Screen Display menus.

INPUTS LIST

In order to make the HT3000 system increasingly flexible, the functions described below make it possible to modify the inputs selection menu and adapt it so that it matches the requirements of the user more closely. The main page displays all the inputs physically present on the projector.
You can delete any inputs which are not in use. To do this, select the input in the pull down menu which appears when you press ◄, and choose whether to activate or deactivate the input (Fig.29).
The deactivation or activation of the source results in automatic renumbering of the remaining active inputs.

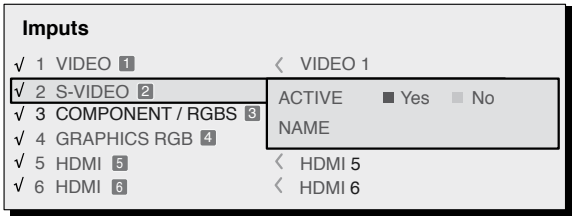

Fig. 29

Active video signal sources (shown in the inputs selection menu) are distinguished by tick symbols.
It can useful to identify the input with a user defined name rather than the type of signal (for example, with the name of the connected device).
To do this, in the pull down menu select NAME and rename the source.
This makes it easier to remember which source is connected to a given input; you can use up to 12 alphanumeric characters for the name (for further details, see ENTERING TEXT).

Table 6

Regolazioni	Ingressi					
	Video S-Video	RGBS 15kHz YCrCb 15kHz	RGBS	YCrCb	RGB Grafico	HDMI™
Posizione	●	●	●	●	●	-
Formato	●	●	●	●	●	●
Frequenza	-	-	●	●	●	-
Fase	-	-	●	●	●	-
Temperatura colore	●	●	●	●	●	●
Correzione Gamma	●	●	●	●	●	●
Overscan	●	●	●	●	●	●
Ritardo Y/C	●	●	-	-	-	-

Entering text

The text entry menu in (Fig.30) makes it quick and easy to enter text.

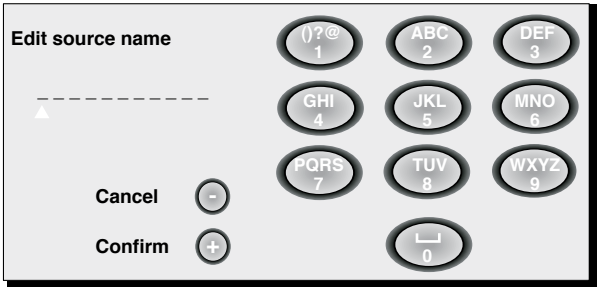

Fig.30

Text input mode is same whether you are editing an existing name or entering a name for the first time. Characters can be inserted in any of the available positions (represented by horizontal lines). Use the ◄ and ► keys to move the cursor leftor right respectively.
Press the number key corresponding to the character; pressing once selects the first character, twice, the second character and so on. The available characters are shown in the text insert menu that appears in this input mode. Once you have entered a character, move to the next space on the right to enter the next with the ► key on the remote control, and repeat the procedure. The same applies if the letter is associated with the same key as before. Use the ▲ key to switch from upper case to lower case characters. Cancel errors with ▼ once you have selected the character in question. Once you have terminated the text input procedure confirm your text and save it by pressing the MENU+ key on the remote control. If you wish to cancel the modifications, press MENU- on the remote control.

F1-F2 keys

The remote control is equipped with two keys (F1 and F2) which are associated with various different functions.
The screen has six options, one for each line, and two columns indicating the keys F1-F2. You can select F1 and F2 with the keys ◄ and ► on the remote control; select the function to assign to F1 or F2 with the keys ▼ and ▲.
The function performed by the key is confirmed by the appearance of a dot on the corresponding column-row intersection (Fig 31).
The following menu options are available.

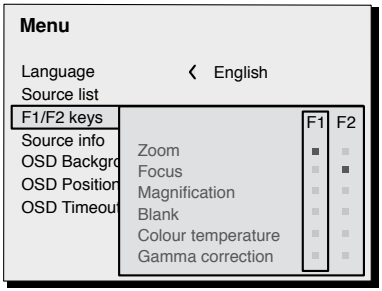

Fig.31

Zoom

Accesses the lens zoom, so that ◄ and ► zoom into and out
The FOCUS setting drives the motorized focus to focus the image; precise focus should enable you to see every pixel in the image when close to the screen.

Focus

This option enables you to use the ◄ and ► keys to focus the image.

Magnification

Activates the electronic zoom, the keys ◄ and ► zoom into the image. If the key is pressed a second time you will activate PAN mode in which the ◄ and ►, ▼ and ▲ keys enable you to pan over the magnified image.
At the thirr pression of ▼ key, the system reconfigures the projector to original visualisation settings.

Blank
Switches off the video signal and displays a black page. As soon as the key is pressed an OSD indication lasting a few seconds confirms that the function has been activated. Pressing any further keys on the remote control restores the previous conditions.

Color Temperature
Clicking the key in question again (F1 / F2) enables you to set the colour temperature from HIGH, MEDIUM, LOW AND USER.

Gamma Correction
Successive pressing of the key in question (F1 or F2) makes it possible to select from among the available gamma curves.

SOURCE INFORMATION
When active (YES) each time the source is changed information is displayed relative to the signal type. If inactive, (NO) no information about the source is displayed.

OSD BACKGROUND
Determines the type of background for the On Screen Display (opaque transparent).

OSD TIMEOUT
Determines the On Screen Display timeout. The adjustment is made using the ◄ (decrease) and ► (increase) keys within a 6-200 second timeframe.

OSD POSITION
Allows the On Screen Display to be positioned in a particular area of the projected image. The OSD can be positioned using the arrow keys for fine adjustments or keys 1...9 on the remote control to select one of 9 preset positions.

MEMORIES

The main picture parameters can be saved in discrete sets of values called "Memories" so that they can be subsequently applied as a group using a single command.
There are 6 distinct Memories (Memory 1, Memory 2, Memory 3) for each of the 8 signal types managed:

	1 VIDEO	
	2 S-VIDEO	
3 COMP/RGB (YPrPb 15KHz)		3 COMP/RGB (RGB 15KHz)
3 COMP/RGB (YPrPb 32KHz)		3 COMP/RGB (RGB 32KHz)
	4 GRAPHICS RGB	
	5 HDMI	
	6 HDMI	

making a total of 24 different available Memories.
The image parameters that can be saved/recalled by the Memories management system are the following:

Image	Picture
BRIGHTNESS	ASPECT
CONTRAST	COLOUR TEMPERATURE
COLOUR	OVERSCAN
TINT	GAMMA
SHARPNESS	
FILTER	
NOISE REDUCTION	

Some of these parameters may not be available for certain inputs or certain input signals, as indicated in Tables 4 and 5.
The menu page for the Memories management functions is activated by pressing the key ◄■► on the remote control.
The operations that can be performed on each memory selected are described here below.

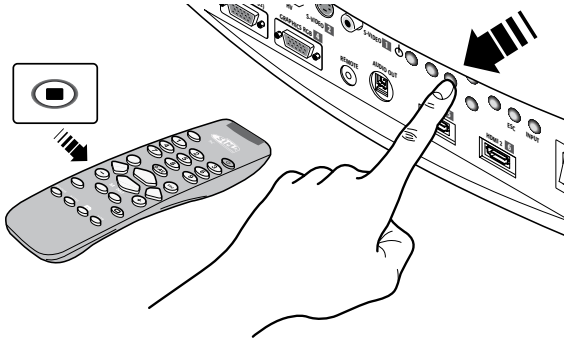

Fig.32

Save memory
To save the image parameter current values in memory 1, move the cursor to line '1' with the ▼ and ▲ , keys and open the pull-down menu by pressing the ◄ key (Fig.33). Now select Save current settings. To confirm the operation, the message Current settings saved in Memory.
Memories 2...6 can be saved using the same procedure.

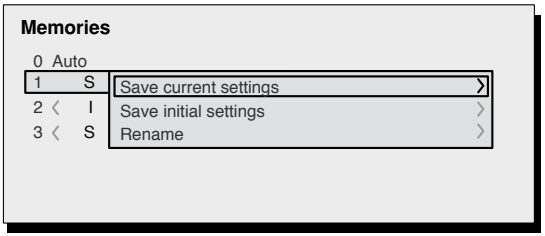

Fig.33

Recalling a memory
To retrieve memories select the required line and press ►. The parameters stored in the selected memory will be applied to the displayed image, while a confirmation message will be displayed to confirm the operation 'Memory 1 recalled.'. The Memory recalled will be associated with the source and signal type, and will be automatically recalled every time that particular source and signal type combination is selected.

Restore memory to original settings
To restore the original values of a previously modified Memory, select the line relative to the Memory in question and open the corresponding drop-down menu (◄ key). Select the line 'Save initial settings'.
To confirm the operation, the message 'Initial settings saved in Memory 1' is shown at the bottom of the display and the letter "I" appears to the left of the memory name.

Rename a memory
All Memories can be named. To assign a name (with a maximum length of 12 alphanumeric characters) to a Memory, select the option 'Rename' from the corresponding pull-down menu. The text is input in accordance with the method described in the heading TEXT INSERT.

Restore current values
When you enter the MEMORIES menu a copy of the current settings is saved in a temporary memory (designated by 0 - AUTO). Once one or more memories have been recalled, you can restore the settings that were effective at the moment the Memories menu was accessed by selecting Memory '0'(0 - AUTO). Note that this operation must be executed before the Memories' menu page disappears (30 seconds after the final operation with the remote control or keypad). The next time it appears, in fact, the temporary memory will contain new information that takes account of any Memories that were selected in the penultimate access to the 'MEMORIES page.

Memory 0 can be used even when you do not wish to enable Memories management for the signal in use. Once Memory 0 has been selected, when a source is chosen, the settings that were effective at the time the Memory was previously recalled will be automatically applied.

INFO

Displays the current status of the projector and information concerning the projected video/graphic signal.
This function is displayed on pressing the i key on the remote control (or, in the absence of the On Screen Display, the ► key on the keypad).

QUICK MENUS

The quick menus provide access to the main adjustments that affect image quality without calling the main menu. Brightness, CONTRAST, COLOUR, TINT, SHARPNESSand FILTER adjustments appear at the bottom of the screen one after the other when the ▼ and ▲ keys are pressed.

MESSAGES

The following messages could appear on your screen:

No Signal

The system does not recognise any signal applied to the selected input. In this case:

- Make sure the selected input is connected to a video or graphic signal and that that source is functioning correctly.
- Check the condition of the cables used to connect the system to the various sources.
- Make sure the video or graphic signals supplied by the source are compatible with the system's technical specifications and, in particular, with those of the selected input.

Out of range

This message appears when either the resolution or the vertical/horizontal frequency of the input signal exceeds system specifications (e.g. a QXGA graphic signal) or when an input is supplied with an incompatible signal (e.g. after setting the components input to YCrCb 15kHz a progressive signal is connected).

10 CLEANING AND MAINTENANCE

The projector does not require internal adjustment. There are no user serviceable parts inside the projector.
To replace the bulb or any other repairs, contact your local service centre.

To clean the outer cover of the screen use a soft cloth and moisten slightly if necessary with water and a small amount of neutral soap. Do not rub the rear panel markings.

The lens may be cleaned with a very soft, non-abrasive small brush, in order to remove dust particles. Alternatively, use a soft dry cleaning cloth (of the type used for camera lens cleaning) to remove fingerprints and grease marks.

11 TROUBLESHOOTING GUIDE

No power (LEDs always OFF)

- Check that the units' power switches are set to I.
- Check that the power cables are correctly connected to the units' power sockets.
- Check the condition of the fuse located on the power socket on the rear of the projector.
- Replace the fuse located on the projector's power socket with an identical type (T 5A H).
- If the fuse blows repeatedly, seek technical assistance from your nearest Dealer.

Lamp fails to switch on

- If this happens immediately after the last time the unit was switched off, allow a few minutes between switching off and switching on again. This will allow the lamp to cool down sufficiently.
- If the lamp fails to illuminate - even though the unit has had time to cool down - seek technical assistance from your nearest Dealer.
- Check the state of the connection by interpreting the code displayed by the system LEDs in accordance with Table 1.

No image

- Make sure the selected input is connected to a video or graphic signal and that that source is functioning correctly.
- Make sure the video or graphic signals supplied by the source are compatible with the HT3000 system's technical specifications and, in particular, with those of the selected input.
- Check the condition of the cables used to connect the projector to its input sources. • Check the state of the connection by interpreting the code displayed by the system LEDs.
- Make sure the cooling air vents on the units are not blocked and that the ambient temperature is below 35°C.

Image is disturbed, unstable or noisy

- Check compatibility of the video or graphic signals with the technical specifications of the system, and specifically, with the specifications of the selected input.
- Check all cables.
- If the problem occurs on a terrestrial broadcast source signal, check that the receiver has been correctly tuned in and that the aerial system is in good working order.
- If the problem occurs in a video signal from a videorecorder, ensure that the videotape is in good condition and that VCR mode is active in the PICTURE menu.
- Adjust the Sharpness parameter in the PICTURE menu to optimise the projected image.

Incomplete image along borders (vertical and horizontal)

- Check compatibility of the video or graphic signals with the technical specifications of the system, and specifically, with the specifications of the selected input.
- Recall the automatic image adjustment function by pressing the key "A" on the remote control or ◄ on the projector's keypad.
- Adjust the horizontal and vertical position of the image with the IMAGE / POSITION menu (if available for the input in question).
- Adjust the width and height of the image, selecting Aspect in the IMAGE ADJUSTMENTS / ASPECT menu.
- Adjust the overscan value applied to the image on the IMAGE / OVERSCAN menu.

Image too dark, too pale or unnaturally coloured

- Check compatibility of the video or graphic signals with the technical specifications of the system, and specifically, with the specifications of the selected input.
- Adjust the CONTRAST, BRIGHTNESS, COLOUR and TINT parameters in the PICTURE menu.
- If necessary, adjust COLOR TEMPERATURE and GAMMA CORRECTION (IMAGE menu).

Graphic image with poor quality vertical detail

- Check compatibility of the video or graphic signals with the technical specifications of the system, and specifically, with the specifications of the selected input.
- Press key "A" on the remote control or ◄ on the projector's keypad to execute automatic adjustments.
- Adjust the FREQUENCY and PHASE settings in the IMAGE menu to optimize the vertical details of the image(if available for the input in question).

Video Image showing colour misalignment on vertical details

- Check compatibility of the video or graphic signals with the technical specifications of the system, and specifically, with the specifications of the selected input.
- Adjust Y/C DELAY settings in the IMAGE menu to reduce colour misalignment.

Remote control does not work

- Check remote control battery power and correct polarity.
- Ensure the area between the infrared sensors (on the front panel of the projector) and the remote control is free from obstructions.
- Make sure the infrared sensors on the front and rear of the projector are not exposed to intense light levels.

12 OPTIONAL ACCESSORIES

You can purchase the following optional accessories at your Dealer:

- Ceiling mount kit
- Lens

A range of lenses are available from our dealers to satisfy varying installation and projection distance needs. See the Additional Information chapter for greater details on projection distance and enlargement ratios.
Always contact our service centre to have the lens replaced.

Use only original or **SIM2 Multimedia approved accessories.**

Warning: for ceiling/wall installation, by means of suspension bracket, carefully follow the instructions and safety instructions recommended by the Manufacturer in the bracket's literature.

A TECHNICAL SPECIFICATIONS

ELECTRONICS

Input signals:

- COMPOSITE VIDEO (CVBS)
  - gold plated RCA connectors
  - 1,0 V_{pp} / 75 Ω, negative synchronisation
- 1 S-VIDEO (Y/C)
  - 4-pole mini-DIN connector
  - Y: 1.0 V_{pp} / 75 Ω, negative synchronisation
  - C: 0.286 V_{pp} / 75 Ω, [nominal NTSC burst level]
  - 0.3 V_{pp} / 75 Ω [nominal PAL, SECAM burst level]
- 1 COMPONENTS (Y/Pr/Pb/) - RGBS
  - 1 set of 4 RCA connectors
  - Component signals
    - Y: 1.0 V_{pp} / 75 Ω, negative or 3 level synchronisation [HDTV]
    - Pr,Pb:0.7 V_{pp} / 75 Ω
  - RGB signal
    - R,B:0.7 V_{pp} / 75 Ω
    - G: 0,7 V_{pp} / 75 Ω, HV synchronisation
    - 1.0 V_{pp} / 75 Ω, negative or 3 level synchronisation [HDTV]
    - Positive or negative TTL, 0.3-5 V_{pp} / 1 kΩ
- RGBHV (analogue RGB)
  - female DB15HD connectors
  - R,B: 0.7 V_{pp} / 75 Ω
  - G: 0.7 V_{pp} / 75 Ω, separate H/V Sync or H+V Sync
  - 1.0 V_{pp} / 75 Ω, negative or 3 level synchronisation [HDTV]
  - Positive or negative TTL, 0.3-5 V_{pp} / 1 kΩ
- 2 HDMI HDCP

Control:	Panel (keypad), remote control, via RS232 from PC or home automation devices, USB 1.1
Horizontal frequency:	from 15 to 80 kHz (up to to UXGA format @ 65 Hz)
Vertical frequency:	48 -100 Hz
Video Standard:	automatic selection (PAL B,G,H,I,M,N,60, SECAM, NTSC 3.58 and 4.43)
High definition video standard.:	ATSC HDTV (480p, 720p, HT3000i)
Graphic standards:	VGA, SVGA, XGA, SXGA, UXGA
Colour temperature:	from 6500 to 10000 K (36 steps)
Outputs:	2 12-V jack connector outputs (1 active with system powered on, 1 active with 16:9 aspect ratio selected) 1 Optical audio output (TOSLINK connector)

GENERAL PROJECTOR SPECIFICATIONS

Power cable:	(EU, UK and US); 2m length
Power supply:	from 100 to 240 V AC, +/-10% tolerance Frequency: from 48 to 62 Hz
power absorption:	350 W max
Fuse:	T 5A H. 5 x 20 mm
Dimensions:	435 x 190 x 430 mm (LxAxP)
Weight (approx):	11 kg
Operating temperature:	10 to 35°C
Shipping temperature:	-15 to 55°C
Storage temperature:	-15 to 55°C
Humidity:	20% to 95% relative humidity noncondensing
Safety:	EN 60950
Portablity:	desktop equipment
Compatibility electromagnetic:	EN 55022 Class B EN 55024 EN 61000-3-2 EN 61000-3-3
Transport:	IEC 68-2-31, IEC 68-2-32

B ON SCREEN MENU LAYOUT

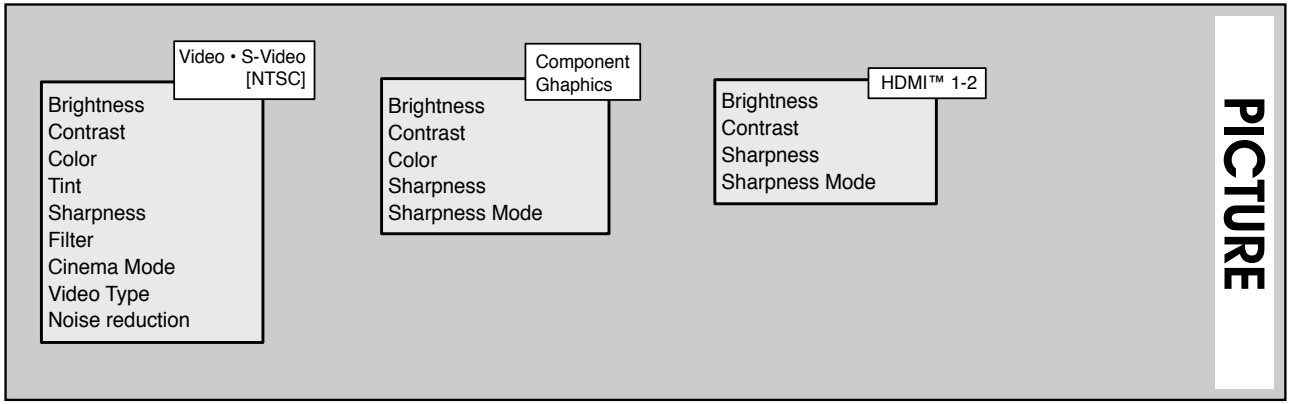

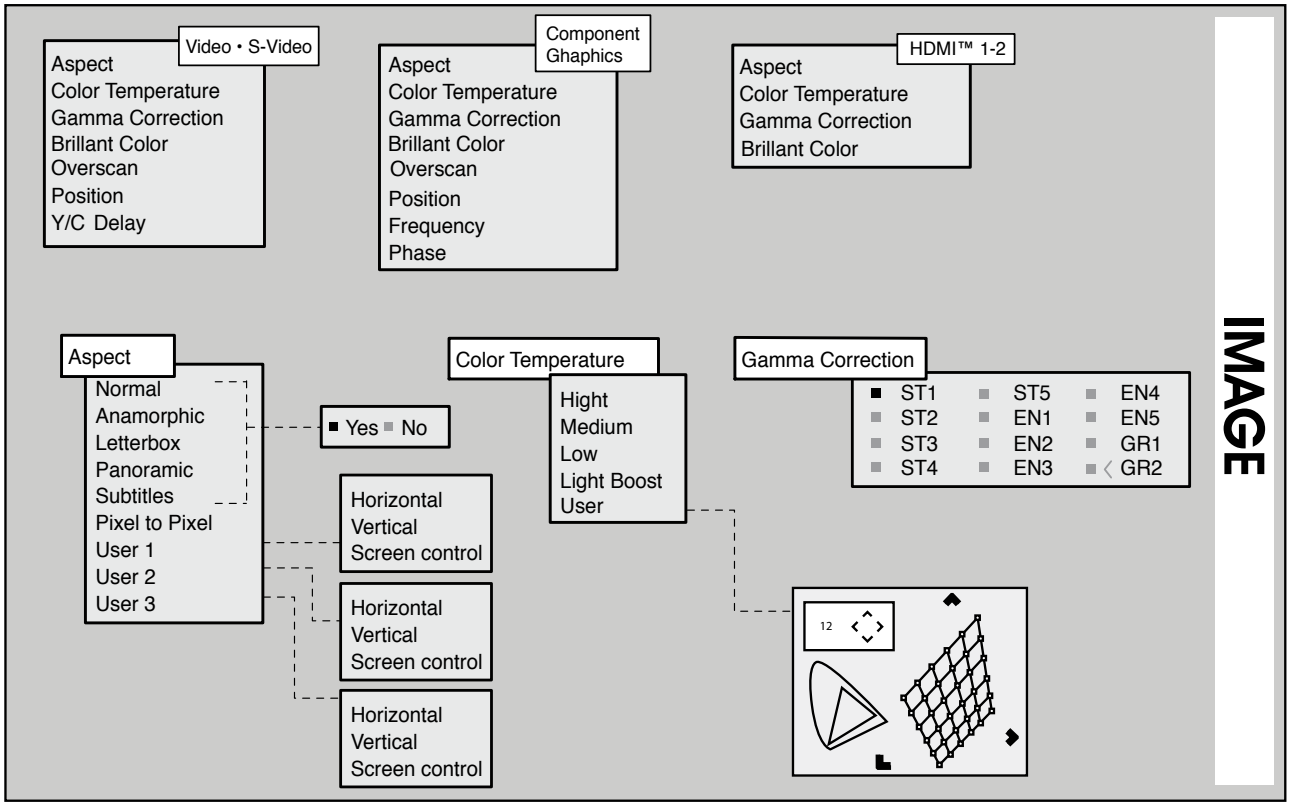

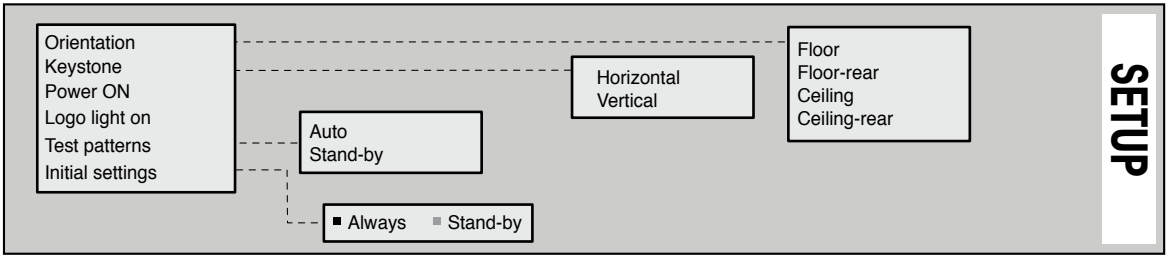
SETUP
Orientation
Keystone
Power ON
Logo light on
Test patterns
Initial settings
Horizontal
Vertical
Floor
Floor-rear
Ceiling
Ceiling-rear
Auto
Stand-by
Always
Stand-by

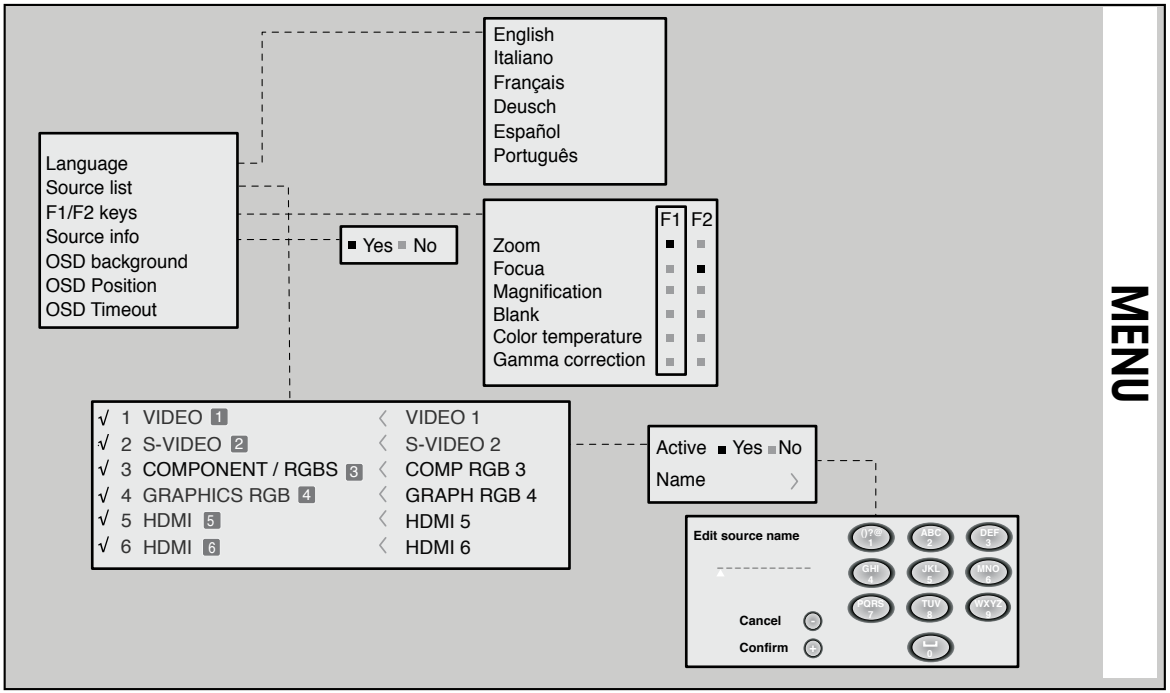
MENU
Language
Source list
F1/F2 keys
Source info
OSD background
OSD Position
OSD Timeout
English
Italiano
Français
Deusch
Español
Português
Yes
No
F1
F2
Zoom
Focua
Magnification
Blank
Color temperature
Gamma correction
1 VIDEO 1
2 S-VIDEO 2
3 COMPONENT / RGBS 3
4 GRAPHICS RGB 4
5 HDMI 5
6 HDMI 6
VIDEO 1
S-VIDEO 2
COMP RGB 3
GRAPH RGB 4
HDMI 5
HDMI 6
Active
Yes
No
Name
Edit source name
Cancel
Confirm

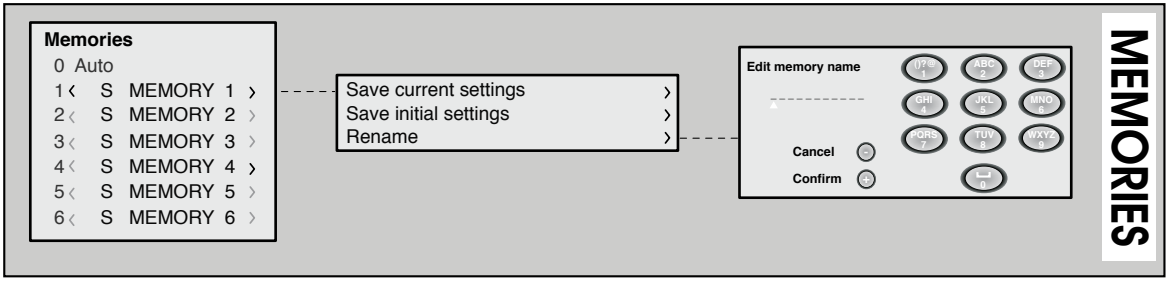
MEMORIES
Memories
0 Auto
1 S MEMORY 1
2 S MEMORY 2
3 S MEMORY 3
4 S MEMORY 4
5 S MEMORY 5
6 S MEMORY 6
Save current settings
Save initial settings
Rename
Edit memory name
Cancel
Confirm

C DIMENSIONS

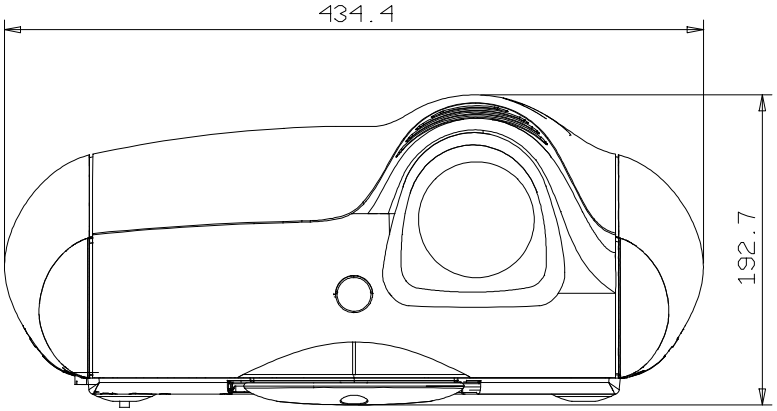

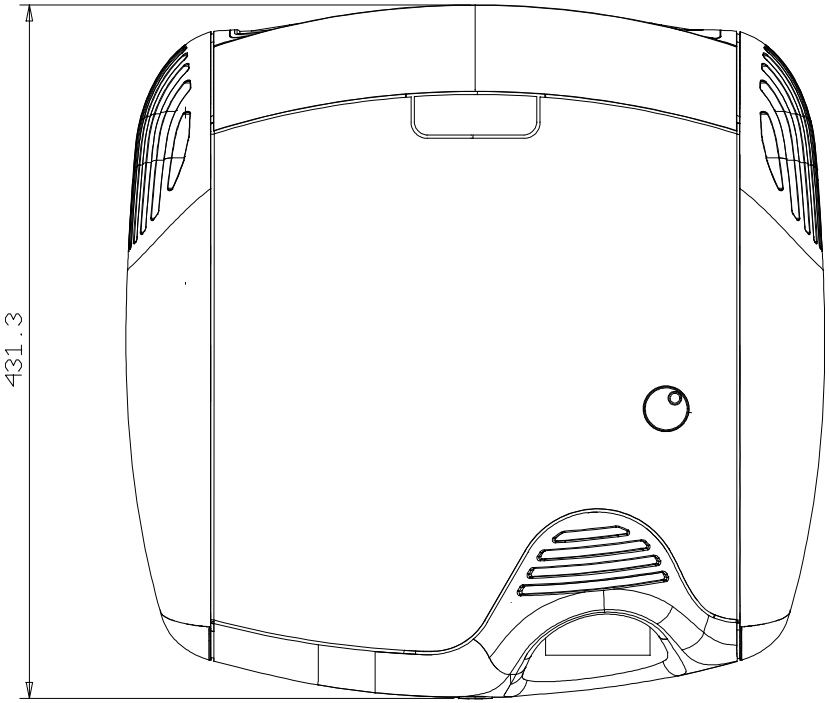

D PROJECTION DISTANCE

16/9						
Screen size (diagonal)	Screen width		Min projection distance		Max projection distance	
			max L		max L	
in	m	in.	m	in.	m	in.
50"	1,1	44"	1,7	66"	2,3	90"
60"	1,3	52"	2,0	79"	2,7	107"
70"	1,6	61"	2,4	93"	3,2	126"
80"	1,8	70"	2,7	106"	3,6	144"
90"	2,0	78"	3,0	119"	4,1	162"
100"	2,2	87"	3,4	132"	4,6	180"
110'	2,4	96"	3,7	146"	5,0	198"
120"	2,7	105"	4,0	159"	5,5	215"
150"	3,3	131"	5,0	199"	6,8	270"
180"	4,0	157"	6,0	238"	8,2	323"
200"	4,4	174"	6,7	265"	9,1	360"
250"	5,5	217"	8,4	331"	11,4	449"
300"	6,6	261"	10,0	397"	13,7	539"

4/3						
Screen size (diagonal)	Screen width		Min projection distance		Max projection distance	
			max L		max L	
in .	m	in.	m	in.	m	in.
50"	1,0	40"	2,0	81"	2,8	110"
60"	1,2	48"	2,5	97"	3,3	132"
70"	1,4	56"	2,9	113"	3,9	153"
80"	1,6	64"	3,3	129"	4,5	175"
90"	1,8	72"	3,7	145"	5,0	197"
100"	2,0	80"	4,1	162"	5,6	219"
110'	2,2	88"	4,5	178"	6,1	241"
120"	2,4	96"	4,9	194"	6,7	263"
150"	3,0	120"	6,1	242"	8,4	329"
180"	3,7	144"	7,4	291"	10,0	395"
200"	4,1	160"	8,2	323"	11,1	438"
250"	5,1	200"	10,3	404"	13,9	548"
300"	6,1	240"	12,3	485"	16,7	658"

SIM2 Multimedia S.p.a. • Viale Lino Zanussi, 11 • 33170 Pordenone - ITALY
Phone +39.434.383.253-256 • Fax +39.434.383260-261
www.sim2.com • e-mail: info@sim2.it

SIM2 USA Inc. • 10108 USA Today Way • 33025 Miramar FL - USA
Phone +1.954.4422999 • Fax +1.954.4422998
www.sim2usa.com • e-mail: sales@sim2usa.com

SIM2 Deutschland GmbH • Gewerbepark, 17 D-35606 Solms
Phone 0800.800.7462 • Fax 0800.900.7462
www.sim2.com • e-mail: info.de@sim2.it

SIM2 UK LTD • Steinway House Worth Farm,
Little Horsted Nr. Uckfield, East Sussex TN22 5TT
Phone +44.01825.750850 • Fax +44.01825.750851
www.sim2.co.uk • e-mail: kate.buckle@sim2.co.uk

SIM2 Multimedia is certified

UNI EN ISO 9001

• In accordance with the manufacturer's constant product development programme, product specifications and design are subject to changes without notice.