myprojectorlamps.com

The most trusted, dependable name in projector lamp sales.

http://www.myprojectorlamps.com

http://www.myprojectorlamps.ca

http://www.myprojectorlamps.eu

The following projector manual has not been modified or altered in any way.

SIM2 Grand Cinema HT

User and Installation Manual
The home theater projector

HT300 XTRA

SIM2 Multimedia

cod.46.0328.000

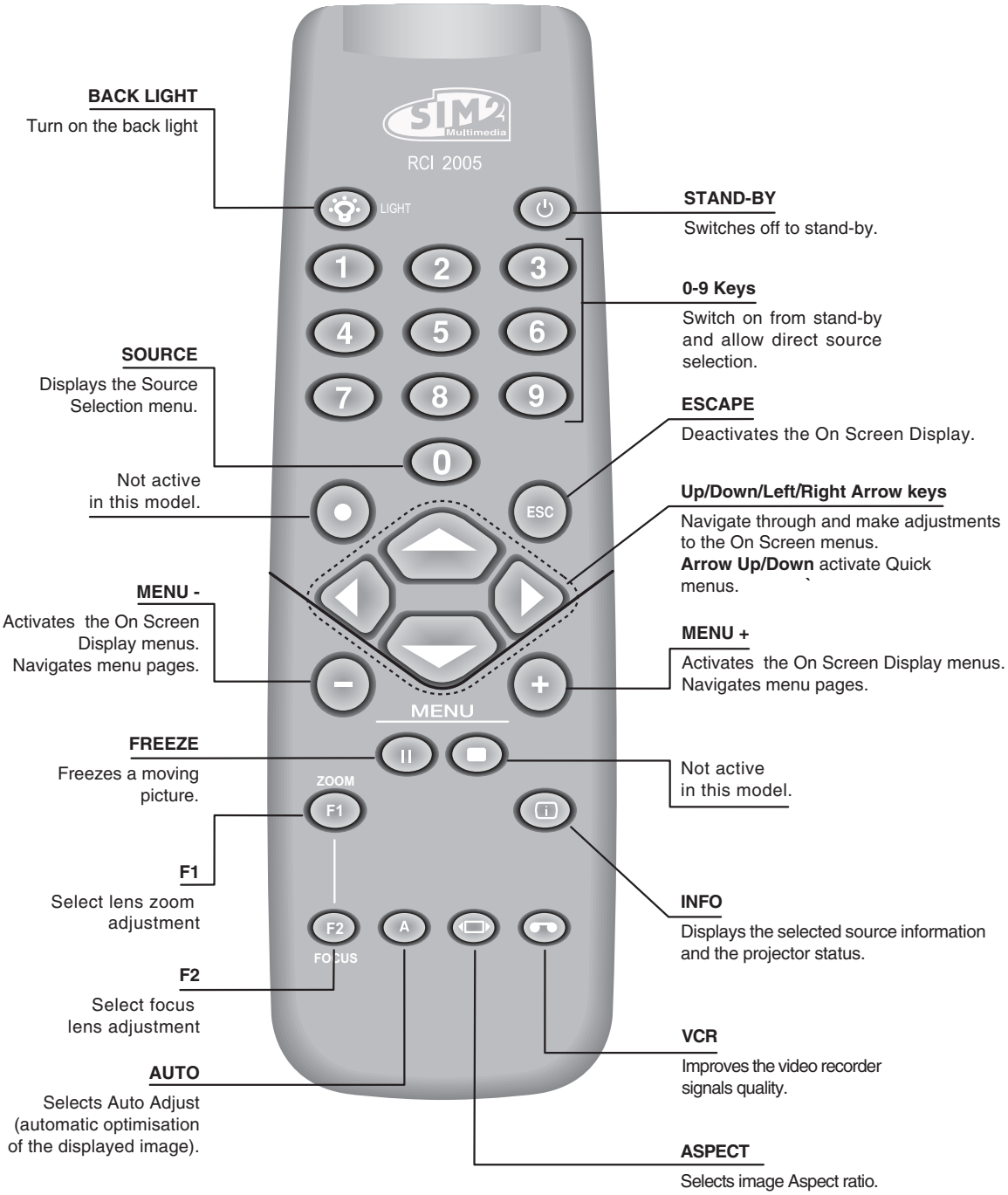
BACK LIGHT
Turn on the back light
SIM2 Multimedia
RCI 2005
LIGHT
STAND-BY
Switches off to stand-by.
1
2
3
4
5
6
7
8
9
0-9 Keys
Switch on from stand-by and allow direct source selection.
SOURCE
Displays the Source Selection menu.
0
ESCAPE
Deactivates the On Screen Display.
Not active in this model.
ESC
Up/Down/Left/Right Arrow keys
Navigate through and make adjustments to the On Screen menus.
Arrow Up/Down activate Quick menus.
MENU -
Activates the On Screen Display menus.
Navigates menu pages.
MENU +
Activates the On Screen Display menus.
Navigates menu pages.
MENU
FREEZE
Freezes a moving picture.
Not active in this model.
ZOOM
F1
F1
Select lens zoom adjustment
INFO
Displays the selected source information and the projector status.
F2
A
FOCUS
F2
Select focus lens adjustment
VCR
Improves the video recorder signals quality.
AUTO
Selects Auto Adjust (automatic optimisation of the displayed image).
ASPECT
Selects image Aspect ratio.

1 INTRODUCTION

Congratulations and thank you for choosing the **HT 300 XTRA**, a **SIM2 Multimedia SpA** product *(Fig. 1)*.

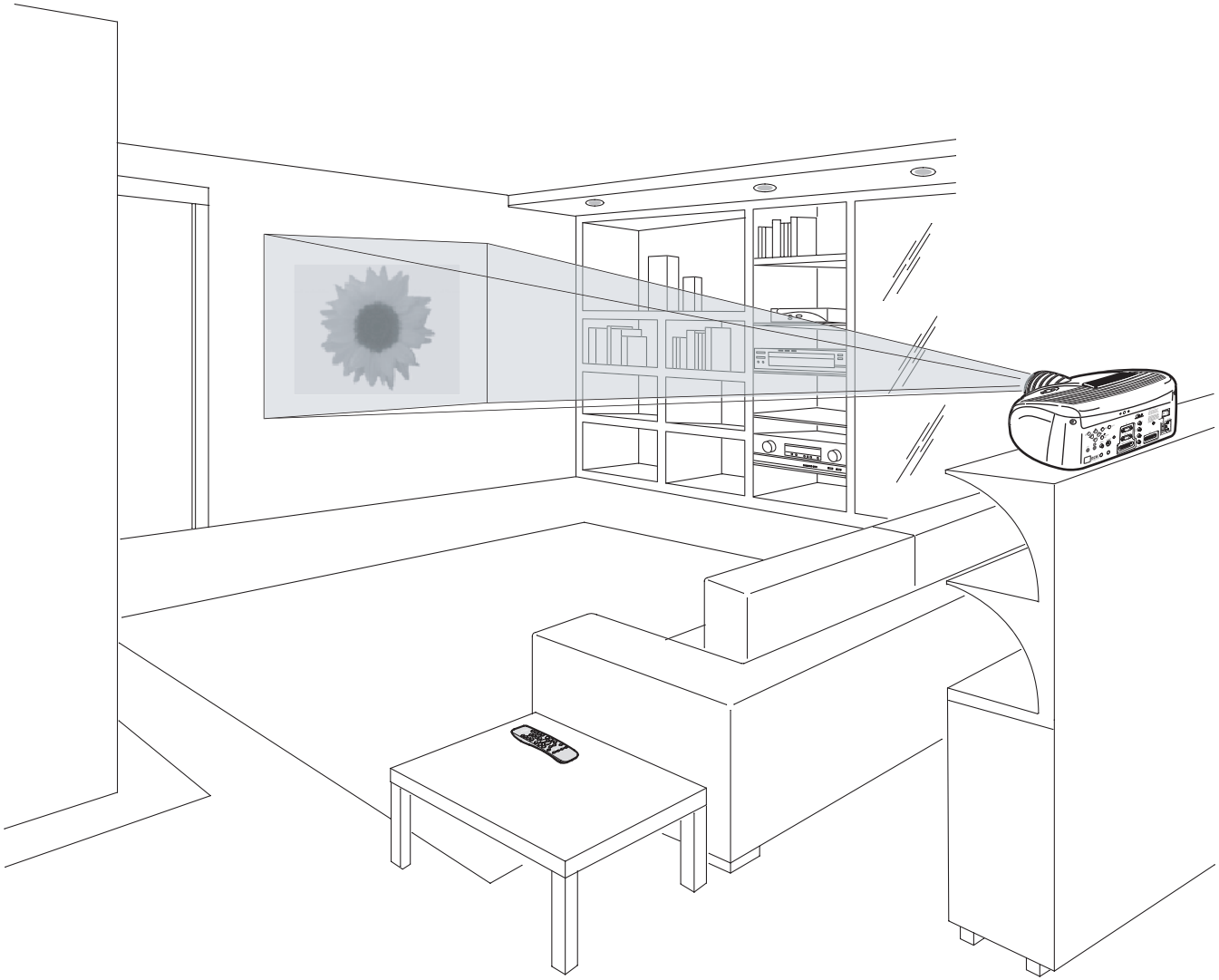

Fig. 1

Using the very latest in DLP™ technology, this projector has been designed specifically for high quality "Home Cinema" applications.

Sophisticated digital processing and a wide choice of inputs enable the connection of a variety of sources such as DVD players, analogue and digital VCRs, analogue and digital satellite receivers and personal computers etc.

The long throw zoom lens allows the position of the projector to be located behind the viewer, thus reproducing a cinema-like installation *(Fig. 2)*.

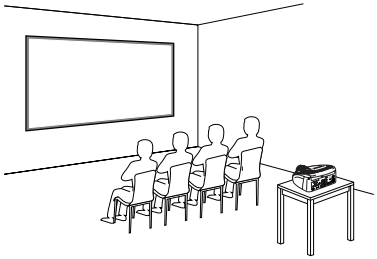

Fig. 2

A sophisticated proprietary optical system, coupled with a hight performance zoom lens ensures hight contrast images, superior uniformity and edge-to-edge definition.

A new 6-segment colour wheel dramatically reduces the so called "rainbow effect" and gives a better contrast, better colorimetry and a lower black level to the image.

The new HD2+ DMD™ chip ensures, on top of the high definition resolution (1280 x 720 pixels), an increased contrast ratio of > 2800:1 thus delivering on the screen an even more realistic image.

The DVI-D input allows a complete digital connectivity to an increasing amount of video sources equipped with digital outputs, thus guaranteeing a perfect reproduction, without any loss of information or interference in the signal.

The renowned DCDi™ technology is adopted for deinterlacing: conversion from interlaced to progressive produces a smooth and natural image, without flickering, loss of vertical resolution and jaggedness along diagonal lines.

The low-noise ventilation system – with variable speed fans – ensures appropriate cooling and maximizes projector reliability.

To fully appreciate your new projector we recommend the use of a good quality screen and surround-sound system. Contact your nearest authorized **SIM2 Multimedia** dealer for further details.

SIM2 carries out comprehensive functional testing in order to guarantee the maximum product quality. For this reason, when you start using the product lamp operating hours may already be at between 30 and 60.

In addition to the regular tests, the Quality Control department performs additional statistical tests at the time of shipment.
In this case the packing may show signs of having been opened, and the accumulated lamp operating hours may be slightly higher than the hours associated with the standard tests.

DLP and DMD are registered trademarks of Texas Instruments.
DCDi is a registered trademark of Faroudja, a division of Genesis Microchip, Inc.

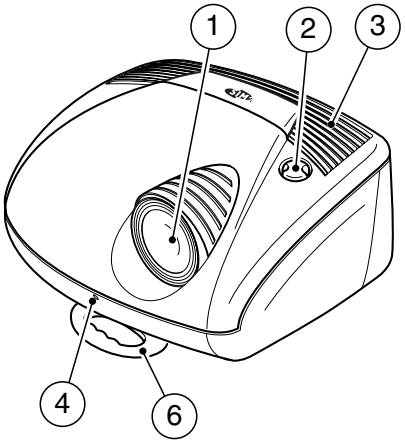

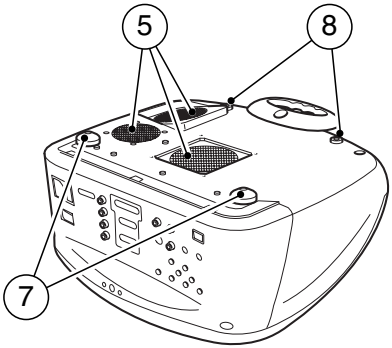

1	Projection lens
2	Lens shift knob
3	Cooling air inlet vents
4	Remote control IR sensor
5	Cooling air outlet vents
6	Adjustable carry-handle
7	Adjustable levelling feet
8	Ceiling/wall bracket fixing holes

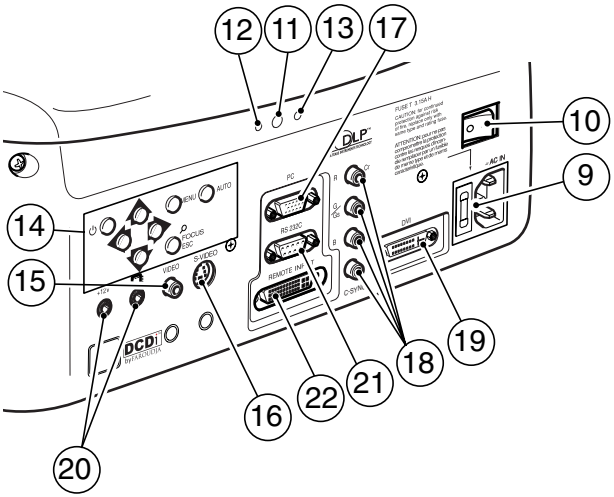

9	Fused power socket
10	Main power switch
11	Remote control rear IR sensor
12	Green LED
13	Red LED
14	Rear keyboard pad
15	Composite video input
16	S-Video input
17	VGA input
18	RGB / YCrCb input
19	DVI-D
20	12Vdc screen output
21	RS232 interface connector
22	Remote Input Interface EVC connector

2 IMPORTANT SAFETY INSTRUCTIONS

ATTENTION:
To reduce the risk of electric shock, disconnect the power supply cable on the rear panel before removing the top cover of the projector.

Refer to trained, authorised personnel for technical assistance.

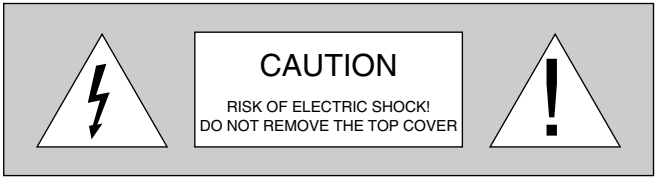

This symbol indicates the possible electric shock hazard associated with uninsulated live components in the interior of the unit.

This symbol indicates the presence of important instructions regarding use and maintenance of the product.

Prior to switching on the projector please read each chapter of this manual carefully as this manual provides basic instructions for using the projector.
The installation of the lamp assembly, preliminary adjustments and procedures that necessitate the removal of the top cover, must be carried out by authorised, trained technicians. There are no user serviceable parts inside. To ensure safe and long term reliability please use power cables supplied with the projector. Observe all warnings and cautions.

• Federal Communication Commission (FCC Statement)
This equipment has been tested and found to comply with the limits for a Class B digital device, pursuant to Part 15 of the FCC rules. These limits are designed to provide reasonable protection against harmful interference when the equipment is used in a commercial environment. This equipment generates, uses and can radiate radio frequency energy and, if not installed and used in accordance with the instruction manual, may cause harmful interference to radio communications. However, there is no guarantee that interference will not occur in a particular installation. If this equipment does cause harmful interference to radio or television reception, which can be determinated by turning the equipment off and on, the user is encuraged to try to correct the interference by one or more of the following measures:
- Reorient or relocate the receiving antenna
- Increase the separation between the equipment and receiver.
- Connect the equipment into an outlet on a circuit different from that to which the receiver is connected.
- Consult the dealer or an experienced radio/TV technician for help.

• For customers in Canada
This Class B digital apparatus complies with Canadian ICES-003.

• For customers in the United Kingdom
ATTENTION: This apparatus must be earthed
The wires in this mains lead are coloured in accordance with the following code:

Green-and-Yellow:	Earth
Blue:	Neutral
Brown:	Live

As the colours of the wires in the mains lead of this apparatus may not correspond with the coloured markings identifying the terminals in your plug proceed as follows:
The wire which is coloured green-and-yellow must be connected to the terminal in the plug which is marked by the letter E or by the safety earth symbol ⏚ or coloured green or green-and-yellow.
The wire which is coloured blue must be connected to the terminal which is marked with the letter N or coloured black.
The wire which is coloured brown must be connected to the terminal which is marked with the letter L or coloured red.

Please follow carefully the warnings listed below, to ensure safe and long term performance of your projector.

- Connect the projector to a power supply with a nominal voltage within the following values: 100-240 Vac, 50/60 Hz, earthed *(Fig. 3)*.

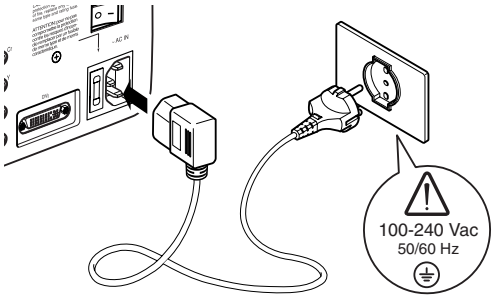

Fig. 3

- The mains plug is the disconnect device. Take care, when installing, that the mains plug and socket outlet are easily accessible. Never pull on the cable to take it out of the socket. If the system is unlikely to be used for a number of days, disconnect the power cable and other apparatus connected to it.

- To save energy, switch off the projector by using the power switch at the rear; when in stand-by (red light on) the projector continues to draw a minimal amount of power.

- Only replace the safety fuse (on the power socket at the rear of projector) with a fuse identical in type and characteristics (T 3.15A H) *(Fig. 4)*.

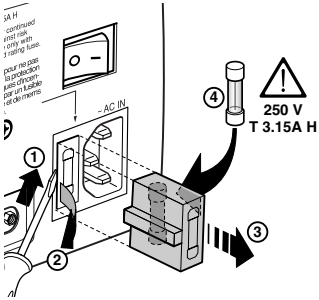

Fig. 4

- Do not switch on your projector when flammable liquids or fumes are present. Do not pour or drop fluids in the vents.

- Do not use the projector when the room temperature is above 35°C (95°F).

- Do not obstruct the cooling air inlets on the top cover, or the air outlets underneath the projector.

- Do not switch on the projector if it is standing on soft surfaces such as cushions, pillows, blankets, mattresses and carpets: the air cooling outlets underneath could become obstructed.

- Do not switch-on the projector if it is standing on surfaces sensitive to heat, as this may result in damage caused by the hot air outlets underneath. Should this be unavoidable take extra precaution of protecting the surfaces with a layer of heat resistant material.

- Intense Light Source! Do not stare directly into the projection lens as possible eye damage could result. Be especially careful that children do not stare directly into the beam.

- Do not open the projector's cover; no user serviceable parts are inside. Refer servicing to qualified service personnel. Opening the projector's cover will invalidate warranty.

- Take care not to shake the projector whilst carrying it by the handle.
- Always position the projector away from direct heat sources.
- Do not touch the surface of the projection lens.
- The projector must be positioned on a stable, suitable platform or be installed using a bracket for fixed ceiling or wall installation. Do not rest the projector on the side panels or on the rear panel when in operation.
- Take care to position cables safely, especially in dark places, in order to avoid a trip hazard.
- For installations using a ceiling or wall-mounted bracket, carefully follow the installation and safety instructions provided with the bracket's literature.
- Please remove batteries from the remote control if not in use for a long period of time.
- A special EVC socket on the projector's rear panel will allow connection to the optional Remote Input Interface (a special cable is required).
  This is not to be confused with a VESA "Plug & Display".
  Never connect a computer to this socket, as the projector and the computer may be damaged.

3 PACKAGING AND CONTENTS

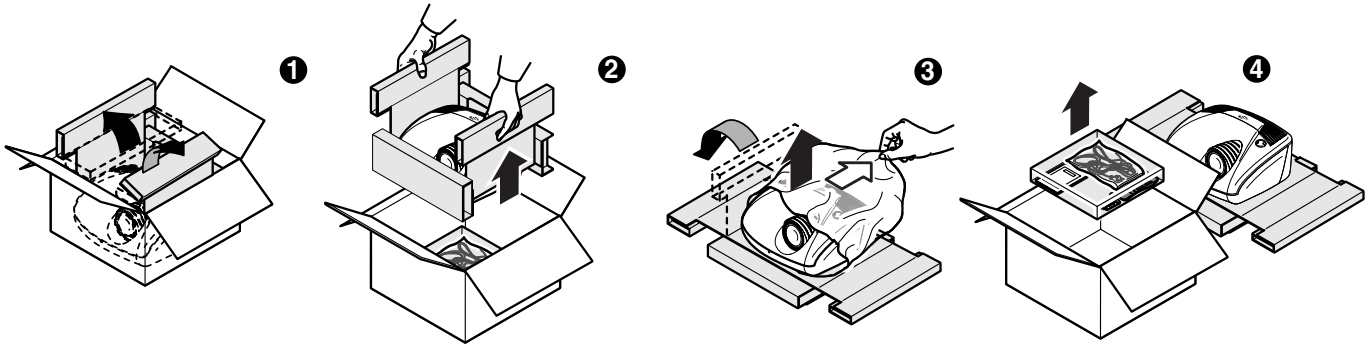

Fig. 5

The carton should contain the following:
- the projector
- the remote control
- four 1.5V AAA batteries (for remote control)
- three power cables (EU, UK, USA)
- the user manual.

To unpack the projector safely and easily please follow steps 1 to 4, as per drawing *(Fig. 5).*

It is recommended that the carton and packaging is retained for future use and in the unlikely event that your projector needs to be returned for repair.

4 INSTALLATION

Position the projector on a stable, suitable platform or utilise the optional bracket for a fixed ceiling or wall installation.

CAUTION: In the case of ceiling or wall mounting using a suspension bracket, follow the instructions carefully and comply with the safety standards you will find in the box together with the bracket. If you use a bracket different to the one supplied by SIM2 Multimedia, you must make sure that the projector is at least 65 mm (2-9/16 inch) from the ceiling and that the bracket is not obstructing the air vents on the lid and on the bottom of the projector.

Adjust the feet underneath to obtain a level position, lining up the base of the projected image to the base of the projection screen *(Fig. 6)*.

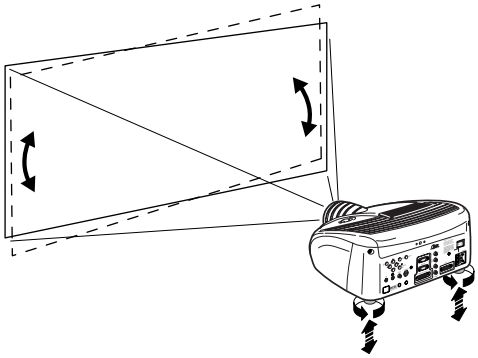

Fig. 6

Position the projector the desired distance from the screen: the size of the projected image is determined by the distance from the lens of the projector to the screen and the zoom setting. See “Appendix B”: Projection distances” for more information.

Use the motorised lens zoom to adjust the image size and the motorised lens focus to achieve maximum clarity. With optimum focus you should be able to clearly see each single pixel when within close proximity to the screen *(Fig. 7)*.

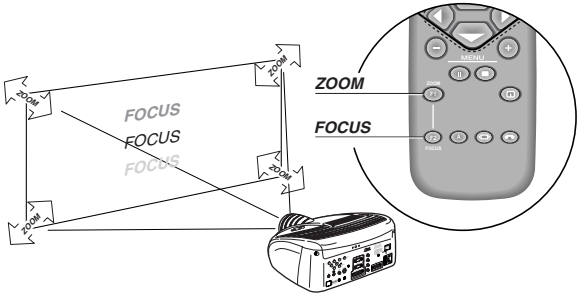

Fig. 7

The manual lens shift adjustment allows the projected image to be moved vertically, up or down, in relation to the centre of the screen; the maximum adjustment being equal to half the height of the image in either direction *(Fig. 8)*.

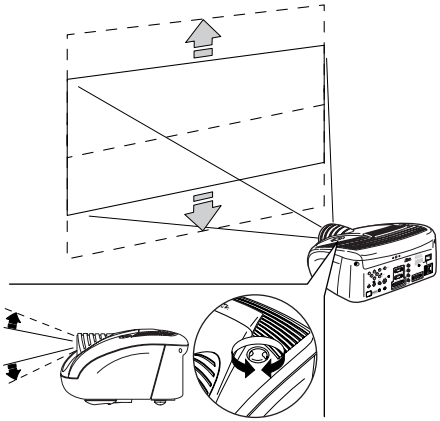

Fig. 8

In the event you are unable to centre the image within the screen area, tilt the projector until the image is correctly positioned. Any keystone error can be removed by the Keystone adjustment in the Set up menu *(Fig. 9)*.

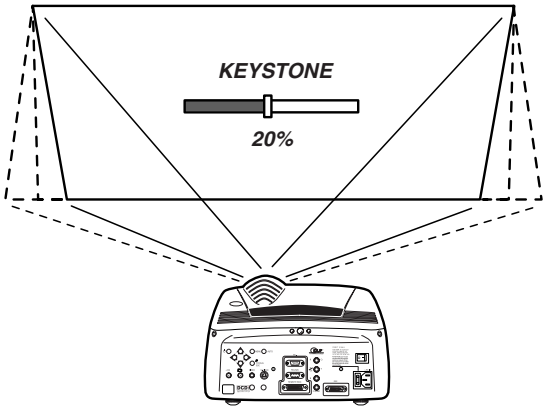

Fig. 9

The Orientation adjustment in the Set up menu will allow the projector to be used for desktop front, ceiling front, desktop rear and ceiling rear installations *(Fig. 10)*.

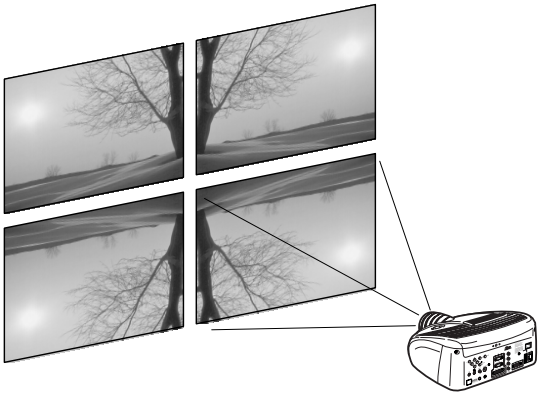

Fig. 10

To activate an electric motorised screen a 12 Volt output is provided at the rear of the projector or with the optional Remote Input Interface. This can be connected to a screen interface unit, which can be supplied by screen manufacturers *(Fig. 11)*.

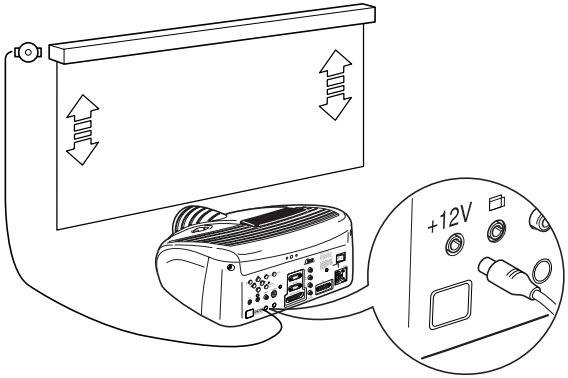

Fig. 11

The output is activated (Voltage: 12 Vdc) when the projector is switched on and is de-activated (no Voltage output) when the projector is in stand-by mode.

Some manufacturers offer screen-masking systems to help frame the projected image and improve picture contrast. These systems can be connected to output ▭, at the rear of the projector *(Fig. 12)*, or on the optional Remote Input Interface.

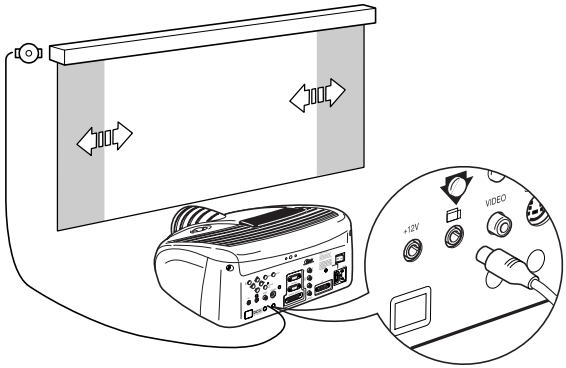

Fig. 12

For rear projection the screen must be translucent.
For front projection, we recommend the use of screens with low gain specifications (i.e. 1.3 to 2). The use of high gain screens should be avoided due to their limited viewing angle,

which is undesirable for a large audience.
Preferably, use a screen with black, non-reflecting borders, which will perfectly frame the projected image.

Avoid light shining directly on the screen during projection as this will reduce contrast and black level detail on the projected image. For the true cinema experience best results are achieved with little or no ambient light.

Furniture and other objects with reflecting surfaces, as well as light coloured walls should be avoided, as they are likely to interfere with the screen's characteristics.

5 SWITCHING ON AND OFF THE PROJECTOR

CAUTION: Connect the projector to a power supply with a nominal voltage within the following values: 100-240 Vac, 50/60 Hz. It must be earthed *(Fig. 13)*.

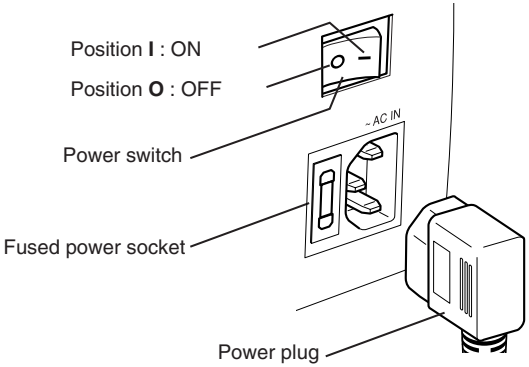

Fig. 13

Upon switch on (in position **I**) the projector will initialise (red and green LEDs on). Followed by stand-by mode (red LED on) *(Fig. 14)*.

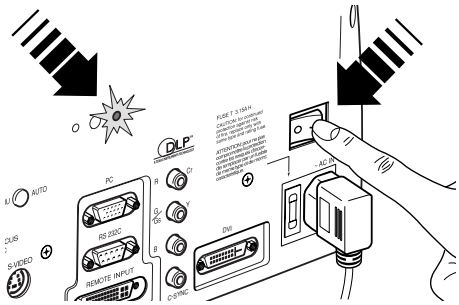

Fig. 14

SWITCH ON FROM STAND-BY

By remote control: press one of **1...9**
By keyboard: press **Up** or **Down Arrow .**

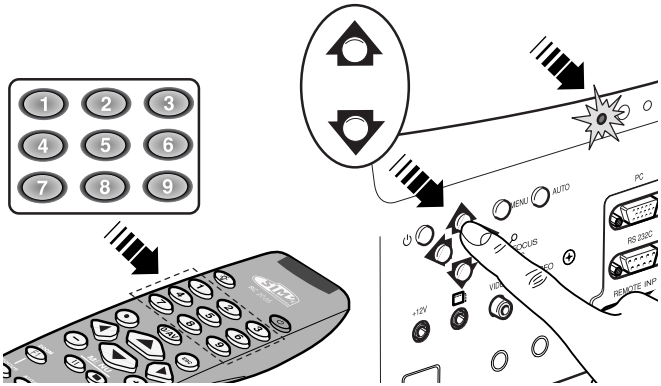

Fig. 15

When switching on from stand-by, the projector will turn on the lamp; after a brief warm up period the image will be displayed (green LED on).The input automatically selected will be the last one memorised prior to switch off *(Fig. 15)*.
You may experience difficulties switching on the projector shortly after switching off: the lamp may fail to come on as it is too hot. Just wait a few minutes to cool it down.

SWITCHING OFF AND RETURNING TO STAND-BY

By remote control: press ⏻
By keyboard: press key ⏻

When switching off, the projector goes in to stand-by memorising the input selection at the time of switch-off.

The fans will continue to work until the lamp has cooled down (red and green LEDs flashing) and will stop automatically after this period.

LED INDICATORS

The LED indicators, located in the top-rear of the projector, provide information about the state of the projector (see table below).

STATE	INDICATORS		NOTES
	GREEN	RED	
POWER OFF	OFF	OFF	The Power is turned off
INITIALIZATION	ON	ON	Power button has been pressed and the software is initialized (15 s)
STANDBY	OFF	ON	Projector is in standby mode
OPERATING	ON	OFF	Projector is on
COOLING LAMP	FLASHING	FLASHING	Projector is powering down; the fans are running to cool the lamp (1 min)
WARNING	FLASHING	OFF	Problems to display one or more source
ERROR	OFF	FLASHING	Internal circuit failure

6 CONNECTIONS

To obtain the best performance from your projector, we recommend the use of good quality “video cables” to the various signal sources (75 ohm Impedance).
Poor quality cables will cause inferior picture performance.

For optimum connectivity we recommend you follow these simple steps:

- With exception of coaxial RCA/Phono type connectors, always double-check that the plug is inserted the correct way round to avoid damaging the plugs or the sockets on the projector *(Fig. 16)*.

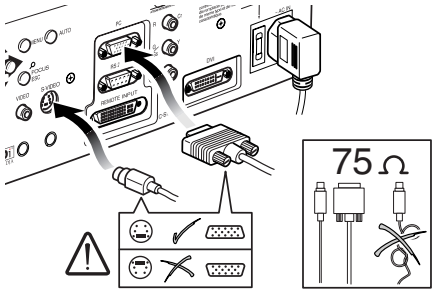

Fig. 16

- Remove cables by the plug and do not pull on the cable itself.
- Avoid tangled cables.
- Position the cables carefully to avoid a trip hazard - especially in low light areas.

COMPOSITE VIDEO INPUT

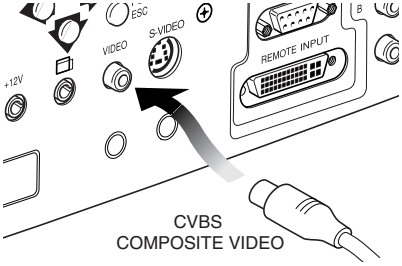

Fig. 17

This input is suitable for a “Composite Video CVBS” via a cable with an RCA/Phono connector *(Fig. 17)*.

S-VIDEO INPUT

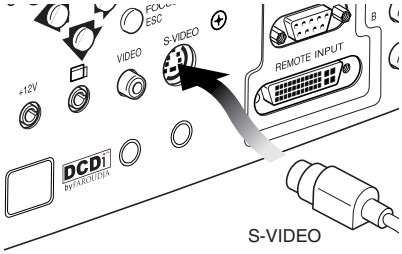

Fig. 18

This input is suitable for equipment fitted with a S-Video output to give improved picture performance (S-VIDEO/S-VHS) Connection is made via a 4-pin mini-DIN *(Fig. 18)*.

VGA INPUT

Personal Computers, Video Processors (scalers) and Video Game consoles can be connected to the projector via the HDB 15-Pin (VGA) terminal.
Ensure the output of equipment connected is RGB with one of the following synchronisation options: separate H/V Sync, H+V Composite Sync, (RGsB) composite sync on the green signal *(Fig. 19)*. This input accepts a Horizontal Scan Frequency of between 15-80 kHz and a Vertical frequency of between 40-100 Hz. Computer Resolutions of VGA, SVGA, XGA, SXGA and UXGA can be displayed.

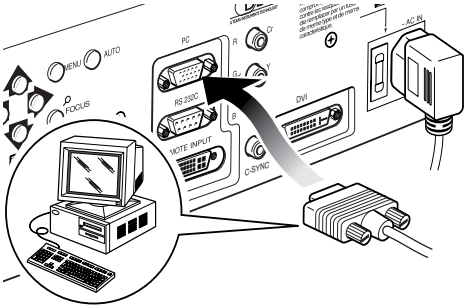

Fig. 19

This input is suitable for a RGB video signal, or for a Component (YCrCb) type, with composite synchronisation on the green signal (RGsB) or on the luminance (Y) signal (YsCrCb) through a cable with RCA/Phono type connector *(Fig. 20)*.

Only horizontal scanning frequencies of 15 kHz (standard video resolution) or 32 kHz (high definition video, with progressive scanning) can be applied to this input.

RGB/YCRCB INPUT

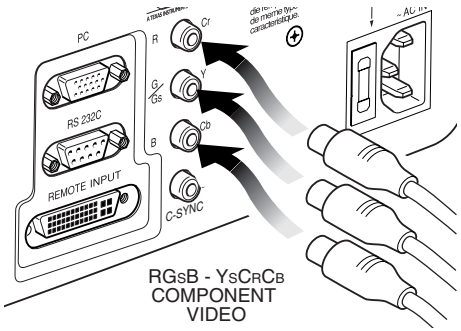

Fig. 20

This input is suitable for a RGB video signal, or for a Component (YCrCb) type, with composite synchronisation on the green signal (RGsB) or on the luminance (Y) signal (YsCrCb) through a cable with RCA/Phono type connector *(Fig. 20)*.

Only horizontal scanning frequencies of 15 kHz (standard video resolution) or 32 kHz (high definition video, with progressive scanning) can be applied to this input.

DVI INPUT

A DVI-D signal (digital RGB) can be applied to this input (*Fig. 21).*

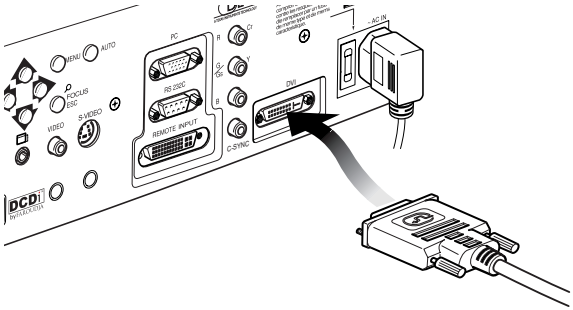

Fig. 21

REMOTE INPUT INTERFACE CONNECTING CABLE

With a special cable (optional), it is possible to connect the Remote Input Interface (optional) to the projector(*Fig. 22).*

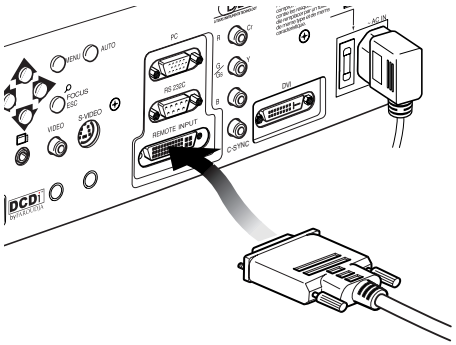

Fig. 22

Connect/disconnect the special Remote Input Interface cable only when the projector is switched off and disconnected from the mains (switch in position **O**).

CAUTION: This is not a VESA "Plug & Display" connector. Never connect a computer to this socket as the projector and the computer may be damaged *(Fig. 23).*

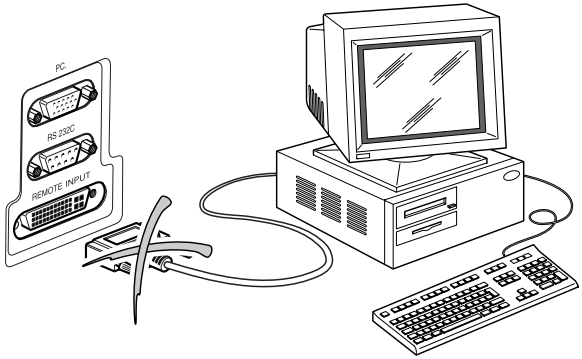

Fig. 23

MOTORISED PROJECTION SCREEN OUTPUT

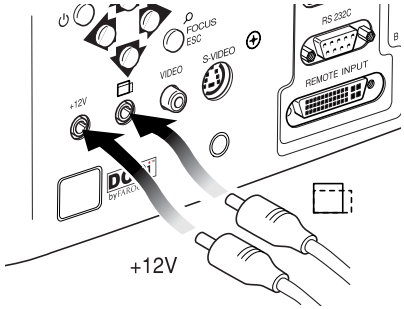

Fig. 24

The projector is equipped with two outputs (Voltage: 12 Vdc) for motorised projection screen and screen masking systems. These 12V outputs should be connected to the appropriate screen interface provided by the screen manufacturer *(Fig. 24).*

The +12V output is activated when the projector is switched on (green LED on) and is de-activated when the projector is in stand-by mode (red LED on).

The output ▭ can be used to control a screen masking system; its output can be set with the "Screen control" adjustment in the "Aspect" menu.
This output allows reduction in the area of a 16:9 screen, into a 4:3 format, by activating a screen masking system (refer to screen manufacturer for further information).

RS232 INTERFACE CONNECTOR

It is possible to control the projector through a personal computer. First, load the appropriate projector control software onto your PC, then simply connect this input to a cable from your PC's RS232 serial port *(Fig. 25)*.

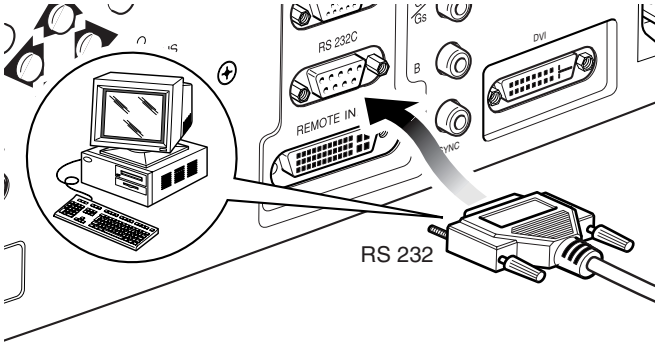

Fig. 25

7 KEYBOARD PAD

Eight push buttons, at the rear of the projector, will allow complete operation without the use of the remote control.

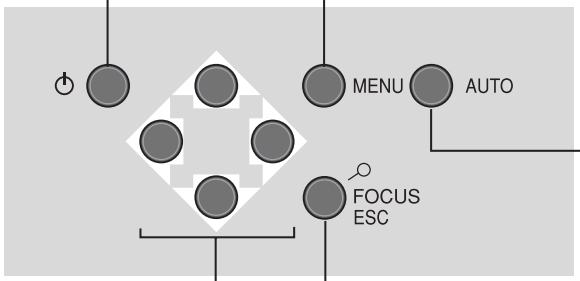

⏻

Switches off to stand-by.

Menu

Activates the On Screen Display menus. Navigates Menu pages.

Auto

Selects Auto Adjust (automatic optimisation of the displayed image).

Up/Down/Left/Right arrow keys

Navigate through and make adjustments to the On Screen menus.
Arrow Up/Down switch on from stand-by and recall Source Selection menu.

-Focus-Esc

De-activates the On Screen Display and gives access to the lens Zoom/Focus adjustment functions.

8 REMOTE CONTROL

Insert the batteries, taking care to match the polarity, as indicated in the battery recess of the remote *(Fig. 26)*.

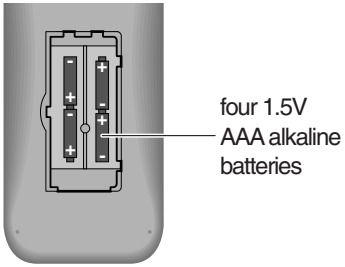

Fig. 26

Change the batteries in the remote control if experiencing difficulty in sending commands to the projector.
If the remote control is not to be used for a long period of time remove the batteries. Replace all batteries at the same time; do not replace one new battery with a used battery. If the batteries have leaked, carefully wipe the case clean and replace with new batteries.

The remote control sends commands to the projector via infrared signals.
It is possible to control the projector by pointing the remote control at the screen; the sensor at the front of the projector will pick up the reflected infrared commands. *(Fig. 27)*.

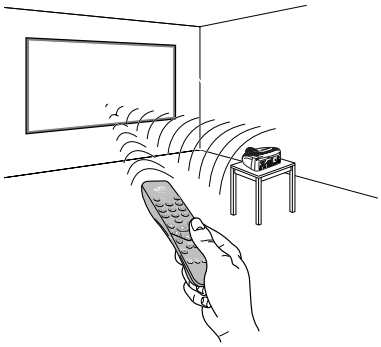

Fig. 27

Avoid placing obstructions between the remote control and the infrared sensor at the front of the projector; this will impair the remote control performance.

9 ON SCREEN MENUS

SOURCE SELECTION

The **Source Selection** menu is recalled by pressing the key: **0/AV** of the remote control or the **Up/Down Arrow** key of the keyboard pad. The selected source will be highlighted in yellow. Use **Up** and **Down Arrow** keys to browse sources. **Right Arrow** to select the desired source.
Alternatively, use the remote control to directly select the required source **(1** to **8)**.

Source Selection

1	Video
2	S-Video
3	RGBS 15 kHz
4	YCrCb 15 kHz
5	RGBS 32 kHz
6	YCrCb 32 kHz
7	Graphics RGB
8	DVI-D
0	RI2 inputs ▸

When using the optional Remote Input Interface press the **0/AV** key twice to display Remote Input Interface sources.

Source Selection / RI2

1	Video 1
2	Video 2
3	S-Video 1
4	S-Video 2
5	RGBS 15 kHz
6	YCrCb 15 kHz
7	RGBS 32 kHz
8	YCrCb 32 kHz
9	Graphics RGB
0	Projector Inputs ▸

When a new source is selected a box appears on the screen with the following indications: selected source, standard video (for video signals), resolution (for graphic signals) and aspect *(Fig. 28).*

Fig. 28

MAIN MENU

To access the main On Screen Display menu, press the **Menu** key on the keyboard or the key **Menu +** or **Menu -** on the remote control *(Fig. 29).*
The main menu is divided into four sections to cover various adjustments in a practical and logical manner.
The on-screen menu layout is dependant upon the chosen input signal so various options may not be applicable, i.e. some typical adjustments to the video signal are not applicable to the graphic RGB signals from PC and viceversa.

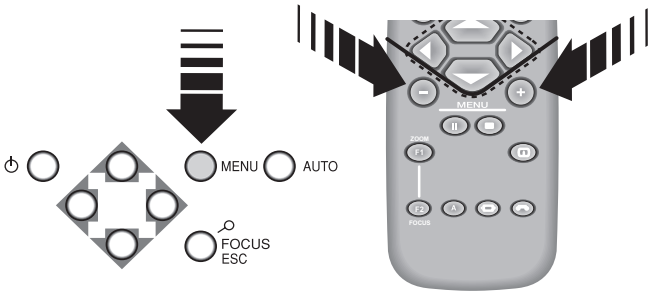

Fig. 29

PICTURE

This menu features adjustments relating to the projected image quality.

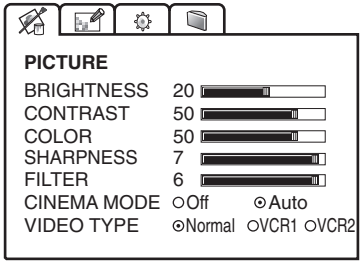

VIDEO

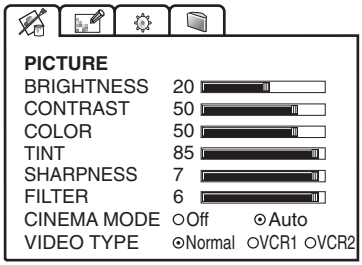

VIDEO-NTSC

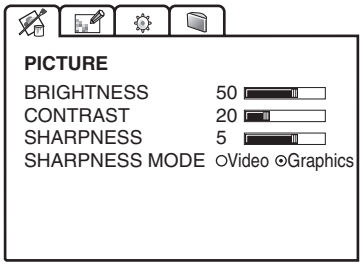

RGB-DVI

BRIGHTNESS
Use this control to adjust the image's black level.

COLOR
Use this control to adjust the colour level.

TINT
Controls the purity of the colours, to NTSC coded signal standards. Tint is only applicable to video input with NTSC standard, to RGB 15kHz and YCrCb 15kHz inputs and YCrCb 32kHz (no RI2).

SHARPNESS
Use this adjustment to increase and decrease the level of picture detail.

SHARPNESS MODE
It allows to select the type of processing that determines the detail. In progressive or de-interlaced video signals the **Video** option is suggested, with graphic signals from a PC the **Graphic** option is suggested.

FILTER
For video signals it improves the image's horizontal/vertical definition and sharpness.

CINEMA MODE
In **Auto** the de-interlacer recognizes if the video signal is originated from a cinematographic film (resulting from Teleciné with 3:2 or 2:2 Pull Down) and applies an interpolation algorithm optimized for this type of signal.
Instead if the video signal does not originate from a cinematographic film, or **Off** is chosen, the de-interlacer applies a "Motion Compensated" algorithm optimized for signals coming from a videocamera.

VIDEO TYPE
Inserts a filter that improves stability of images from video-recorders. To toggle between **Normal** and **VCR** mode, press the **VCR** key on the remote control.

INPUT SIGNALS AND ADJUSTABLE/SETTING ITEMS

ADJUSTMENTS	SOURCE					
	Video S-Video	RGBS 15kHz YCrCb 15kHz	RGBS 32 kHz	YCrCb 32 kHz	RGB Graphics	DVI-D
BRIGHTNESS	●	●	●	●	●	●
CONTRAST	●	●	●	●	●	●
COLOR	●	●	-	●(*)	-	-
TINT	● (NTSC)	●	-	●(*)	-	-
SHARPNESS	●	●	●	●	●	●
SHARPNESS MODE	-	-	●	●	●	●
FILTER	●	●	-	-	-	-
CINEMA MODE	●	●	-	-	-	-
VIDEO TYPE	●	●	-	-	-	-
HORIZONTAL POSITION	●	●	●	●	●	-
VERTICAL POSITION	●	●	●	●	●	-
FREQUENCY	-	-	●	●	●	-
PHASE	-	-	●	●	●	-

● adjustable/can be set - not adjustable/can not be set (*) not adjustable if RI2 input

IMAGE ADJUSTMENTS

This menu features adjustments relating to position, aspect ratio and magnification etc.

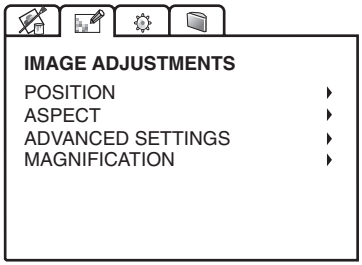

VIDEO

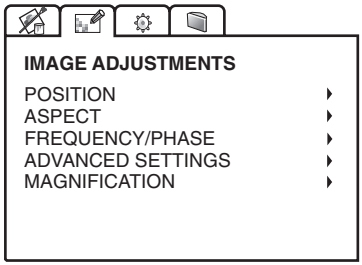

RGB

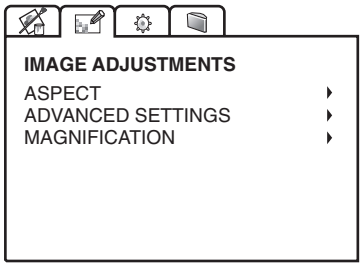

RGB-DVI

POSITION

Use this adjustment to position the image vertically and horizontally.

ASPECT

Determines the aspect ratio of the projected image.
From this menu it is possible to select the aspect ratio by using the numeric keys **1...8** of the remote control.

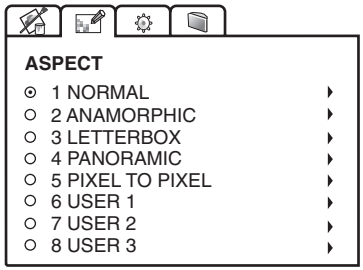

By repeatedly pressing the key or by pressing the and one of the numeric keys **1...8** of the remote control, it is possible to select the aspect ratio.

Normal

This aspect projects the image occuping the full vertical dimension of the screen and maintaining the correct aspect (4:3 or 16:9).

Anamorphic

This aspect allows to properly visualize a 16:9 image.

Letterbox

This aspect allows to project a 4:3 letterbox image, filling the 16:9 screen and maintaining the correct aspect ratio.

Panoramic

This aspect stretches the 4:3 image slightly cutting the upper and lower parts. It's ideal to project a 4:3 image in a screen of 16:9 aspect ratio.

Pixel to Pixel

This aspect projects the signal as it is input without scaling up or down.
Image is projected in the center of screen.

User 1, 2, 3

Should you wish to use a format different to those preset, go to **User** menus.

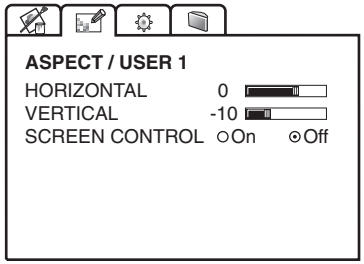

By using the **Horizontal** and **Vertical** adjustments it is possible to select the screen shape of your choice. It is important to keep the relation between height and width so that the correct aspect ratio can be maintained.

Screen Control. If an appropriate screen-masking interface is connected to the 12V output socket " " it is possible to re-frame the screen to a variety of aspect ratios and screen sizes (please refer to the screen manufacturer's manual).

FREQUENCY / PHASE

In the case of RGB graphic signals this adjustment is used for synchronization of the RGB image to the number of pixels on the display panel.

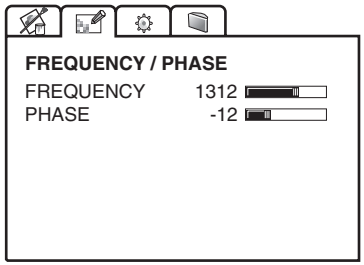

RGB

Frequency

The correct frequency adjustment eliminates vertical band interference.

Phase
The phase adjustment determines the stability and sharpness of the vertical lines in the projected image.

ADVANCED SETTINGS
Advanced colour settings are accessible via this menu.
We recommend the use of these settings only to the experienced user, as their adjustment can seriously affect final image quality.

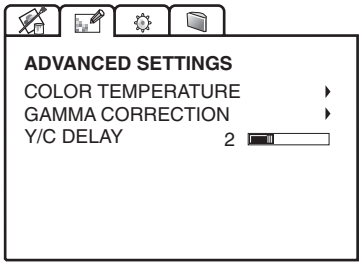

VIDEO

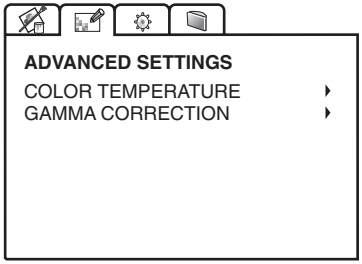

RGB-DVI

Colour temperature
Select the colour temperature of the projected image.

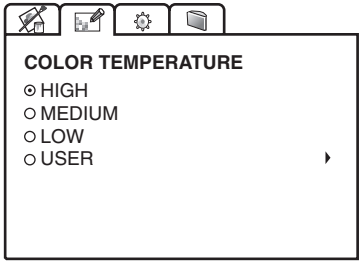

There are three fixed colour temperature settings, which are: **High** (9000÷9500 degrees K), **Medium** (circa 6500 degrees K), **Low** (circa 5000 degrees K).
The **User** option will allow you to select the colour temperature of your choice.

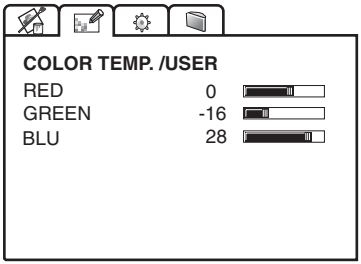

Gamma correction
Selects the Gamma's correction curve. It determines the projector's response to the grey scale, emphasizing - more or less - the different grades of brightness (blacks, dark, medium, light greys, whites) in the projected image.

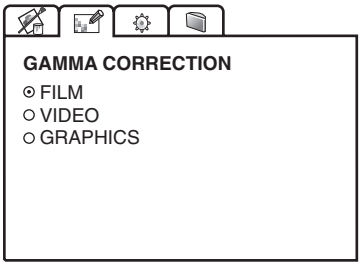

Y / C Delay
Use this adjustment in the event of horizontal colour misalignment within the projected image. It is recommended that a colour bar test pattern be used for this adjustment.

MAGNIFICATION
Use this adjustment to magnify the projected image (please note the higher the magnification the poorer the quality of the image).
Adjust the level of enlargement using the **Left** and **Right Arrow** (the magnifying lens icon will appear at the centre of the image).

Select **Pan** (zoom button on the remote control) to choose the area of image to enlarge, using all four arrow keys.

Via remote control, it is possible to alternate between modes, by pressing the key.

SETUP

The installation menu gives access to features that will allow for correct installation of the projector.

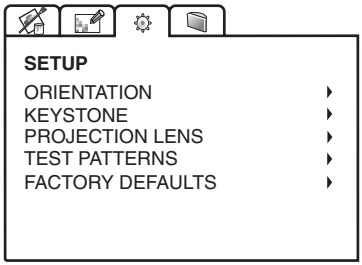

ORIENTATION

Select the option that best describes the installation i.e. desktop front, ceiling front, desktop rear and ceiling rear.

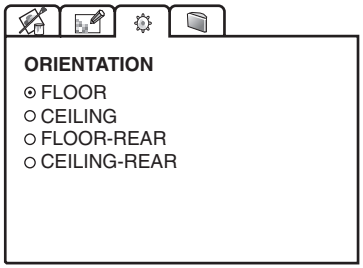

HORIZONTAL / VERTICAL KEYSTONE

To obtain maximum quality of the projected image, we recommend the installation of the projector on a level platform parallel and central to the screen. In the event that the picture is not correctly positioned use the lens shift feature *(Fig. 30)*.

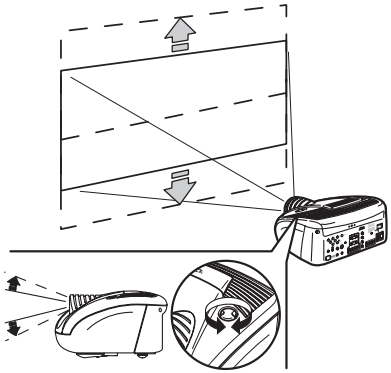

Fig. 30

Should it not be possible to centralize the image by adjusting the lens height, tilt the projector and use the keystone adjustment to restore the projected image to the correct shape.

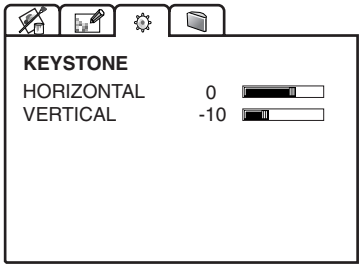

PROJECTION LENS

To adjust **Focus** and **Size** of the projected image, use the lens settings.

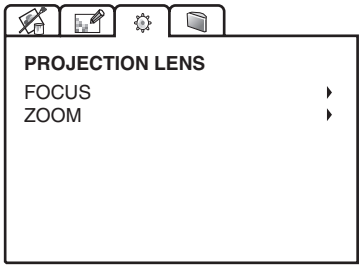

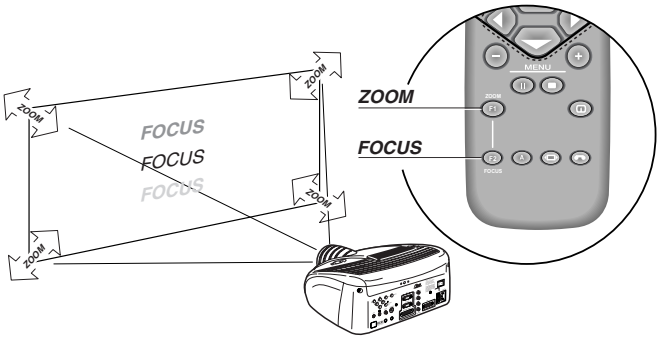

Alternatively, press keys **Focus** and **(Zoom)** on your remote control, or the key **-Focus-Esc** on keyboard pad.

TEST PATTERNS

Displays a series of five test patterns, useful for the installation of the projector.
Press **Up** and **Down Arrow** keys to browse pattern.

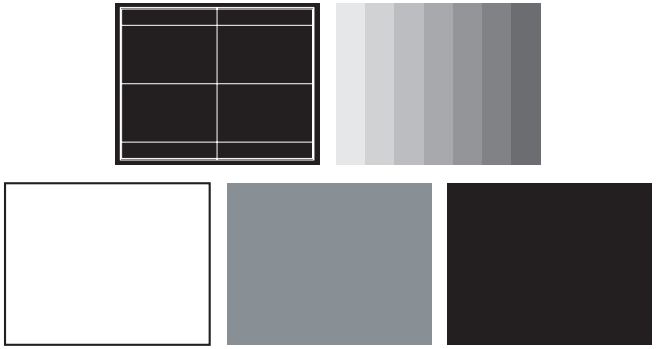

FACTORY DEFAULTS

Reconfigures the projector to original factory settings except Position, Orientation, Y/C Delay, Zoom and Focus.

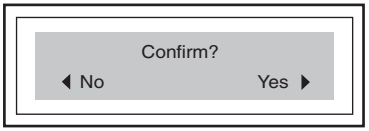

MENU

This menu covers the On Screen Display adjustments.

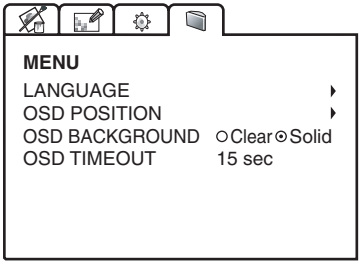

LANGUAGE

Lists the languages options available for the On Screen Display menus.

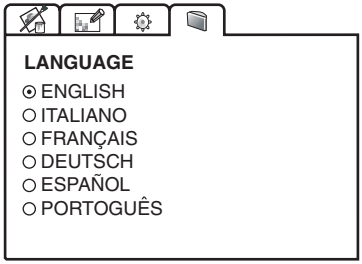

OSD POSITION

To position the On Screen Display within the picture area, use the arrow keys *(Fig. 31a)* or press the **1** to **9** keys on the remote control *(Fig. 31b)*.

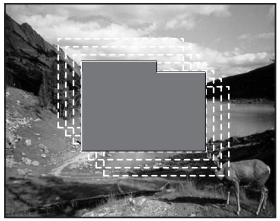

Fig. 31a

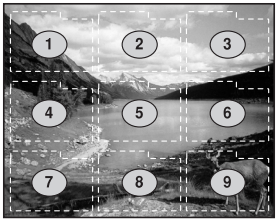

Fig. 31b

OSD BACKGROUND

Gives a choice of backgrounds for the On Screen Display.

OSD TIMEOUT

Use this adjustment to set the display time after which the On Screen Display will disappear. **Left** and **Right Arrow** keys set the timing (within a 5-60 second timeframe).

INFO

This function displays the current status of the projector, input type, input frequency, etc.

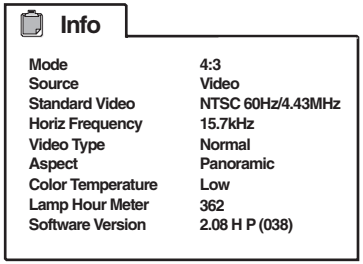

Info

Mode	4:3
Source	Video
Standard Video	NTSC 60Hz/4.43MHz
Horiz Frequency	15.7kHz
Video Type	Normal
Aspect	Panoramic
Color Temperature	Low
Lamp Hour Meter	362
Software Version	2.08 H P (038)

VIDEO

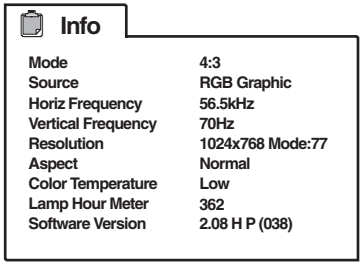

Info

Mode	4:3
Source	RGB Graphic
Horiz Frequency	56.5kHz
Vertical Frequency	70Hz
Resolution	1024x768 Mode:77
Aspect	Normal
Color Temperature	Low
Lamp Hour Meter	362
Software Version	2.08 H P (038)

RGB-DVI

QUICK MENUS

The Quick menus allows the adjustment of most of the picture quality controls without recalling the main On Screen menus. Brightness, Contrast, Color, Tint, Sharpness and Filter adjustments appear at the bottom of the screen, one after another, when **Up** and **Down Arrow** keys are pressed.

MESSAGES

The following messages could appear on your screen:

No Signal

The projector does not recognise any signal sent through the selected input.

- Check that the selected input is actually connected to a video or graphic signal.
- Verify compatibility of video/graphic signals with technical specifications of your projector.

- Check the integrity of cables used to connect various sources.
- If you are using the Remote Input Interface, do not to confuse the menu for selection of projector's inputs (**Source Selection**), with the menu for selection of remote inputs (**Source Selection / RI2**).

Out of range

Either the resolution or the horizontal/vertical frequency of the input signal is too high.

- Input a signal that is within specifications.

10 CLEANING AND MAINTENANCE

The projector does not require internal cleaning. There are no user serviceable parts inside the projector. Please refer all service requirements to qualified personnel.

Cleaning the projector's cover:
Use a soft slightly damp cloth. Do not use abrasive cleaners, solvents or other harsh chemicals, as this will damage the finish of the cover. Avoid direct cleaning of the rear panel's screen-printing.

Cleaning the lens:
The lens may be cleaned with a very soft, non-abrasive small brush, in order to remove dust particles. Alternatively, use a soft dry cleaning cloth (of the type used for camera lens cleaning) to remove fingerprints and grease marks.

11 TROUBLESHOOTING GUIDE

No power (Green and red LED are OFF)

- Check the power switch at the rear: it must be in position **I**.
- Check if the power cable has been connected correctly to a working socket.
- Check the power socket fuse, at the rear of the projector.
- Replace the fuse on the mains socket with an identical type (T 3.15A H) *(Fig. 2)*.
- Should the problem persist, seek authorised technical assistance.

The lamp is not coming on

- Allow a few minutes pause between switching off and turning on again (from stand-by). This will allow the lamp to cool down sufficiently.
- If the lamp doesn't come on – even though the projector has had sufficient time to cool down – seek technical assistance from your nearest Dealer.

No image

- Check that the selected input is actually connected to a active video or graphic signal.
- Check that the above source actually works.
- Verify compatibility of video/graphic signals with the technical specifications of the projector.
- Check the integrity of cables used to connect various sources.
- Check temperature of the room: it must be below 35°C (95°F)
- Check projector air vents on top and underneath the projector: they must be free of obstruction.
- If the problem persists, consult your Dealer.
- If you are using the Remote Input Interface, do not to confuse the menu for selection of projector's inputs (**Source Selection**), with the menu for selection of remote inputs (**Source Selection / RI2**).

Image is disturbed, unstable or noisy

- Verify compatibility of video/graphic signals with the technical specifications of the projector.
- Check the integrity of cables connecting projector to various sources.
- If the signal source is a terrestrial broadcast (via a VCR) check that the receiving channel has been correctly tuned in and that the aerial system is in good working order.
- Should the problem be present with a signal coming from a video-recorder, ensure that the videotape is an Original "first generation" copy and in good condition.
- Adjust the VCR's tracking control for optimum picture performance. Ensure the VCR mode is active in the Picture menu.

Incomplete image along borders (vertical and horizontal)

- Compare compatibility of video/graphic signals and technical specifications of your projector.
- Press **Auto** (on your remote or keypad) to execute automatic adjustments.
- Adjust the horizontal and vertical position of projected image by selecting **Position** on the **Image Adjustments** menu.
- Adjust the width and height of image, selecting **Aspect** in the **Image Adjustments** menu.

Image too dark, too pale or unnaturally coloured

- Verify compatibility of video/graphic signals with technical specifications of your projector.
- Go to **Picture** menu, select and regulate any of the following, accordingly: **Contrast**, **Brightness**, **Color**, and **Tint**.
- If necessary, reset the **Color Temperature** and **Gamma Correction** (found on the **Image Adjustments** / **Advanced Settings** menu).

Graphic image with poor quality vertical detail

- Verify compatibility of video/graphic signals with technical specifications of your projector.
- Press **Auto** (on your remote or keypad) to execute automatic adjustments.
- Adjust **Frequency** and **Phase** parameters, found in the **Image Adjustments** menu, to optimise vertical detail of the projected image.

Video Image showing colour misalignment on vertical details

- Verify compatibility of video/graphic signals with technical specifications of your projector.
- Adjust **Y/C Delay** settings in the **Image Adjustments** / **Advanced Settings** to reduce colour misalignment. For best results use an external colour bar test pattern source.

Remote control does not work

- Check the batteries and for correct polarity.
- Ensure that the area between the infrared sensor (front of projector) and the remote control is free of obstruction.
- Ensure that infrared sensors (front and rear of projector) are not exposed to intense light levels.

12 OPTIONAL ACCESSORIES

You can purchase the following optional accessories at your Dealer:

- Remote Input Interface with 10 m Cable.
- Wall/Ceiling Bracket Kit.

Use only original, or **SIM2 Multimedia** approved, accessories.
CAUTION: for ceiling/wall installation, by means of suspension bracket, carefully follow the instructions and safety instructions recommended by the Manufacturer in the bracket's literature.

A TECHNICAL SPECIFICATIONS

OPTICAL

Projection system:	optical engine based on 1 DMD™ HD2+ chip, sealed housing, dusty proof
DMD™ panel:	resolution 1280x720 pixel
Brightness uniformity:	10% above or below the average
Contrast ratio:	> 2800:1 (full On / full Off)
Projection lens:	zoom, 12 elements AR multilayer coating, motorized focus and zoom, manual elevation
Aperture f#:	2.7 (zoom max) - 3.3 (zoom min)
Picture size:	50-250 inches (diagonal measure)
Aspect ratio:	4/3 and 16/9
Throw ratio: (throw distance: picture width)	1.8:1 - 2.5:1
Focus range:	2.2 - 13.0 m (7' 3" - 42' 8")
Throw Distance:	60": 2.4m - 3.3m (7' 11" - 10' 10") 80": 3.2m - 4.4m (10' 6" - 14' 5") 100": 4.0m - 5.5m (13' 2" - 18' 1")
Keystone adjustement:	up to 26° (optical: ± 8° digital: ±18°)
Lamp:	120 W UHP
Lamp life time:	8000 hours (average value measured in the laboratory under optimal conditions; it can be sensibly reduced by the unit misusing)

ELECTRICAL

Input Signals:	CVBS on RCA/Phono type connector S-VHS on Mini-DIN connector RGBHV on DB15HD connector RGBS / YCrCb on RCA/Phono type connector DVI-D
Horizontal frequency:	from 15 to 80 kHz (up to to UXGA format @ 60 Hz)
Vertical frequency:	48-100 Hz
Video standards :	automatically selected (PAL B,G,H, I, M,N,60, SECAM, NTSC 3.58, 4.43)
High definition video:	ATSC HDTV (480p, 720p, 1080i)
Graphic standards :	VGA, SVGA, XGA, SXGA, UXGA
Deinterlacer:	Faroudja chip set, DCDi™, 3:2 pull down sequence convertion
Colour temperature:	adjustable from 5000 to 9300 degrees K
Video processor:	DTI, CTI, comb filter, noise reduction. Sharpness, Y/C delay and NTSC tint adjustments
Remote control:	via infrared remote control and via computer through RS232 serial interface
Remote inputs:	via Remote Inputs Interface (optional) and cable with EVC connector

Low Voltage Power Output:	two 12 Vdc output, 100 mA max on jack connectors

GENERAL

Supply:	from 100 to 240 Vac, -10% +6% tolerance
Frequency:	from 48 to 62 Hz
Consumption:	180 W max
Fuse:	T 3.15A H, 5 x 20 mm
Dimensions of projector:	352 mm x 174 mm x 318 mm (LxHxD) 13”-7/8 x 6”-7/8 x 12”-1/2 (LxHxD)
Weight of projector:	5.0 kg (11 lbs)
Packaging and gross weight:	400 mm x 275 mm x 405 mm (LxHxD) 1’ 4” x 11” x 1’ 4” (LxHxD) double reinforced carton; expandable anti-shock packaging; gross weight, including accessories: 8 kg (17.7 lbs); recyclable packaging material

ENVIROMENTAL

Operation temperature:	0 to 35°C (32° to 95°F)
Transportation temp.:	-10 to 55°C (14° to 131°F)
Storage temperature:	-10 to 55°C (14° to 131°F)
Humidity:	10% to 90% relative humidity non-condensing
Safety:	EN 60950, UL 60950
Transportability:	desktop equipment
Electromagnetic compatibility:	EN 55022 Class B EN 55024 EN 61000-3-2 EN 61000-3-3
Transportation:	IEC 68-2-31, IEC 68-2-32

B DIMENSIONS

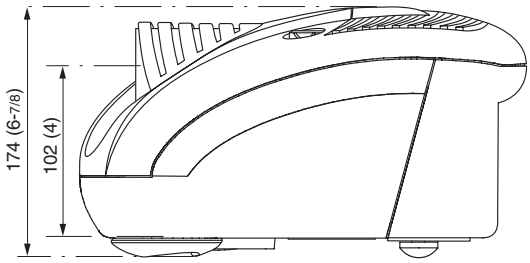

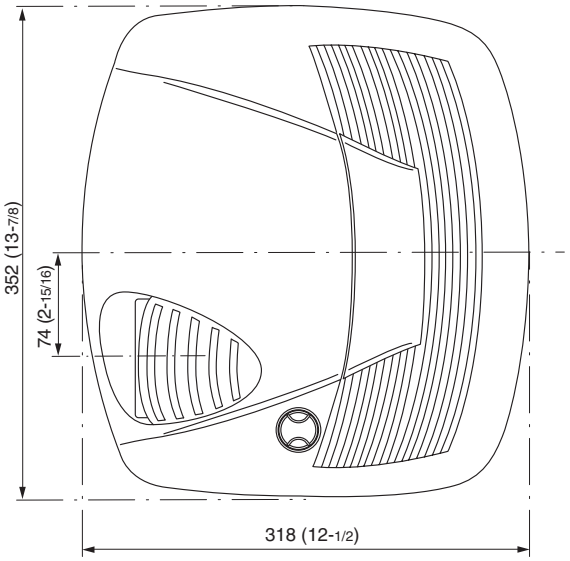

unit: mm (inches)

C PROJECTION DISTANCES

Follow the table below to determine the optimal projection distance (between the screen and the center of the lens). This will help you to obtain the desired screen size.

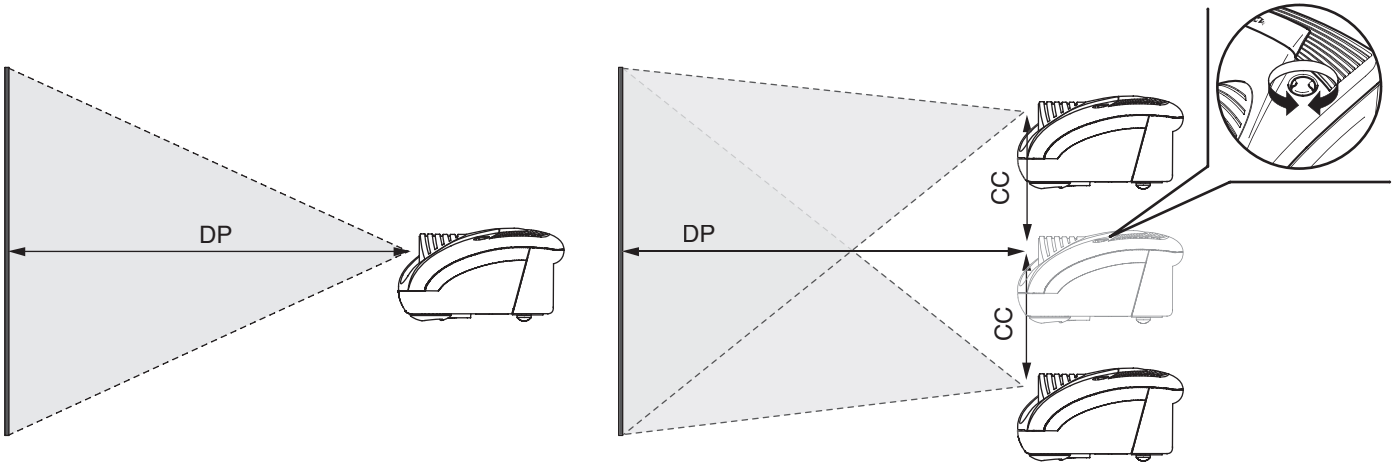

Screen size (diagonal)	Screen width		16/9							
			Min projection distance				Max projection distance			
			min. DP		max CC		max. DP		max CC	
in.	m	in.	m	ft. in.	m	ft. in.	m	ft. in.	m	ft. in.
50"	1,1	44”	2,0	6’ 6”	0,3	0’ 11”	2,7	9’ 0”	0,4	1’ 3”
60"	1,3	52”	2,4	7’ 10”	0,3	1’ 1”	3,3	10’ 9”	0,5	1’ 6”
70"	1,6	61”	2,8	9’ 1”	0,4	1’ 3”	3,8	12’ 7”	0,5	1’ 9”
80"	1,8	70”	3,2	10’ 5”	0,4	1’ 6”	4,4	14’ 4”	0,6	2’ 0”
90"	2,0	78”	3,6	11’ 9”	0,5	1’ 8”	4,9	16’ 2”	0,7	2’ 3”
100"	2,2	87”	4,0	13’ 1”	0,6	1’ 10”	5,5	17’ 11”	0,8	2’ 6”
120’	2,7	105”	4,8	15’ 8”	0,7	2’ 3”	6,6	21’ 7”	0,9	3’ 1”
150"	3,3	131”	6,0	19’ 7”	0,8	2’ 9”	8,2	26’ 11”	1,2	3’ 9”
180"	4,0	157”	7,2	23’ 6”	1,0	3’ 4”	9,9	32’ 4”	1,4	4’ 7”
200"	4,4	174”	8,0	26’ 1”	1,1	3’ 8”	11,0	35’ 11”	1,5	5’ 1”
220"	4,9	192”	8,8	28’ 9”	1,2	4’ 1”	12,0	39’ 6”	1,7	5’ 6”
250"	5,5	218”	9,9	32’ 7”	1,4	4’ 7”	13,7	44’ 11”	1,9	6’ 4”

Screen size (diagonal)	Screen width		4/3							
			Min projection distance				Max projection distance			
			min. DP		max CC		max. DP		max CC	
in.	m	in.	m	ft. in.	m	ft. in.	m	ft. in.	m	ft. in.
50"	1,0	40”	2,4	8’ 0”	0,3	1’ 1”	3,4	11’ 0”	0,5	1’ 7”
60"	1,2	48”	2,9	9’ 7”	0,4	1’ 4”	4,0	13’ 2”	0,6	1’ 10”
70"	1,4	56”	3,4	11’ 2”	0,5	1’ 7”	4,7	15’ 7”	0,7	2’ 2”
80"	1,6	64”	3,9	12’ 6”	0,5	1’ 10”	5,4	17’ 7”	0,8	2’ 6”
90"	1,8	72”	4,4	14’ 4”	0,6	2’ 0”	6,0	19’ 9”	0,8	2’ 9”
100"	2,0	80”	4,9	16’ 0”	0,7	2’ 3”	6,7	22’ 0”	0,9	3’ 1”
120’	2,4	96”	5,8	19’ 2”	0,8	2’ 8”	8,0	26’ 5”	1,1	3’ 8”
150"	3,1	120”	7,3	23’ 11”	1,0	3’ 4”	10,1	33’ 0”	1,4	4’ 8”
180"	3,7	144”	8,8	28’ 9”	1,2	4’ 1”	12,1	39’ 7”	1,7	5’ 7”
200"	4,1	160”	9,7	31’ 11”	1,4	4’ 6”	13,4	44’ 0”	1,9	6’ 2”
220"	4,5	166”	10,7	35’ 1”	1,5	4’ 11”	-	-	-	-
250"	5,1	200”	12,2	39’ 11”	1,7	5’ 8”	-	-	-	-

INDEX

1 INTRODUCTION	**1**
2 IMPORTANT SAFETY INSTRUCTIONS	**4**
3 PACKAGING AND CONTENTS	**6**
4 INSTALLATION	**7**
5 SWITCHING ON AND OFF THE PROJECTOR	**9**
▶ Switch on from stand-by	9
▶ Switching off and returning to stand-by	10
6 CONNECTIONS	**10**
▶ Composite video input	11
▶ S-VIDEO Input	11
▶ VGA input	11
▶ RGB/YCrCb Input	11
▶ DVI Input	12
▶ Remote Input Interface connecting cable	12
▶ Motorised projection screen output	12
▶ 232 INTERFACE CONNECTOR	13
7 KEYBOARD PAD	**13**
8 REMOTE CONTROL	**14**
9 ON SCREEN MENUS	**15**
▶ Source selection	15
▶ Main menu	15
▶ Picture	16
▶ Image adjustments	17
▶ Setup	20
▶ Menu	21
▶ Info	22
▶ Quick menus	22
▶ Messages	22
10 CLEANING AND MAINTENANCE	**23**
11 TROUBLESHOOTING GUIDE	**23**
12 OPTIONAL ACCESSORIES	**25**
A TECHNICAL SPECIFICATIONS	**25**
B DIMENSIONS	**26**
C PROJECTION DISTANCES	**27**

SIM2 Multimedia S.p.a. • Viale Lino Zanussi, 11 • 33170 Pordenone - ITALY
Phone +39.434.383.253-256 • Fax +39.434.383260-261
www.sim2.com • e-mail: info@sim2.it

SIM2 USA Inc. • 10108 USA Today Way • 33025 Miramar FL - USA
Phone +1.954.4422999 • Fax +1.954.4422998
www.sim2usa.com • e-mail: sales@sim2usa.com

SIM2 Deutschland GmbH • Gewerbepark, 17 D-35606 Solms
Phone 0800.800.7462 • Fax 0800.900.7462
www.sim.com • e-mail: info.de@sim2.it

SIM2 UK LTD • Steinway House Worth Farm,
Little Horsted Nr. Uckfield, East Sussex TN22 5TT
Phone +44.01825.750850 • Fax +44.01825.750851
www.sim2.co.uk • e-mail: kate.buckle@sim2.co.uk

SIM2 Multimedia is certified

UNI EN ISO 9001

• Due to the constant product development, specifications and design might be subject to change without notice.