SANYO

Multimedia Projector

MODEL PLC-8810E

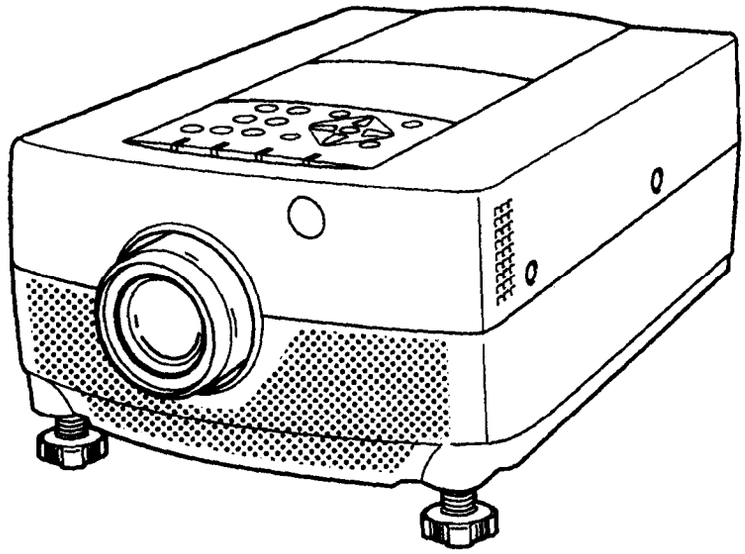

OWNER'S INSTRUCTION MANUAL

TO THE OWNER

As the owner of a new Multi-media Projector, you are probably eager to try out your new projector. Before you do, we suggest that you spend a little time reading this manual to familiarize yourself with the operating procedures, so that you will receive maximum satisfaction from the many features included in your new projector.

This owner's manual will acquaint you with your projector's features. Reading it will help us too. Through the years, we have found that many service requests were not caused by problems with our projectors. They were caused by problems that could have been prevented, if the owner had followed the instructions in the manual.

You can often correct operating problems yourself. If your projector fails to work properly, see "TROUBLESHOOTING" section on pages 49 ~ 50 and try the solutions marked for each problem.

SAFETY PRECAUTIONS

WARNING:
TO REDUCE THE RISK OF FIRE OR ELECTRIC SHOCK, DO NOT EXPOSE THIS APPLIANCE TO RAIN OR MOISTURE.

Intense light source. Do not stare directly into the projection lens as possible eye damage could result. Be especially careful that children do not stare directly into the beam.

If the Projector will not be used for an extended time, unplug the new Projector from the power outlet.

READ AND KEEP THIS OWNER'S MANUAL FOR LATER USE.

IMPORTANT:
For your protection in the event of theft or loss of this LCD projector, please record the Model Number and Serial Number located on the rear of unit and retain this information. Refer to these numbers whenever you call upon your authorized dealer regarding this product.
Do not discard shipping carton and packing materials.
These items may be needed for storage or future servicing.

Model No:_____

Serial No:_____

IMPORTANT SAFETY INSTRUCTIONS

All the safety and operating instructions should be read before the product is operated.

Read all of the instructions given here and retain them for later use. Unplug this projector from AC power supply before cleaning. Do not use liquid or aerosol cleaners. Use a damp cloth for cleaning.

Do not use attachments not recommended by the manufacturer as they may cause hazards.

Do not place this projector on an unstable cart, stand, or table. The projector may fall, causing serious injury to a child or adult, and serious damage to the projector. Use only with a cart or stand recommended by the manufacturer, or sold with the projector. Wall or shelf mounting should follow the manufacturer's instructions, and should use a mounting kit approved by the manufacturer.

Do not expose this unit to rain or use near water... for example, in a wet basement, near a swimming pool, etc...

Slots and openings in the back and bottom of the cabinet are provided for ventilation, to insure reliable operation of the equipment and to protect it from overheating.

The openings should never be covered with cloth or other material, and the bottom opening should not be blocked by placing the projector on a bed, sofa, rug, or other similar surface. This projector should never be placed near or over a radiator or heat register.

This projector should not be placed in a built-in installation such as a bookcase unless proper ventilation is provided.

This projector should be operated only from the type of power source indicated on the marking label. If you are not sure of the type of power supplied, consult your authorized dealer or local power company.

Do not overload wall outlets and extension cords as this can result in fire or electric shock. Do not allow anything to rest on the power cord. Do not locate this projector where the cord will be abused by persons walking on it.

Never push objects of any kind into this projector through cabinet slots as they may touch dangerous voltage points or short out parts that could result in a fire or electric shock. Never spill liquid of any kind on the projector.

Do not attempt to service this projector yourself as opening or removing covers may expose you to dangerous voltage or other hazards. Refer all servicing to qualified service personnel.

Unplug this projector from wall outlet and refer servicing to qualified service personnel under the following conditions:

a. When the power cord or plug is damaged or frayed.
b. If liquid has been spilled into the projector.
c. If the projector has been exposed to rain or water.
d. If the projector does not operate normally by following the operating instructions. Adjust only those controls that are covered by the operating instructions as improper adjustment of other controls may result in damage and will often require extensive work by a qualified technician to restore the projector to normal operation.
e. If the projector has been dropped or the cabinet has been damaged.
f. When the projector exhibits a distinct change in performance-this indicates a need for service.

When replacement parts are required, be sure the service technician has used replacement parts specified by the manufacturer that have the same characteristics as the original part. Unauthorized substitutions may result in fire, electric shock, or injury to persons.

Upon completion of any service or repairs to this projector, ask the service technician to perform routine safety checks to determine that the projector is in safe operating condition.

Follow all warnings and instructions marked on the projectors.

For added protection to the projector during a lightning storm, or when it is left unattended and unused for long periods of time, unplug it from the wall outlet. This will prevent damage due to lightning and powerline surges.

An appliance and cart combination should be moved with care. Quick stops, excessive force, and uneven surfaces may cause the appliance and cart combination to overturn.

If the projector is to be built into a compartment or similarly enclosed, the minimum distances must be maintained.
Do not cover the ventilation slot on the projector.
Heat build-up can reduce the service life of your projector, and can also be dangerous.

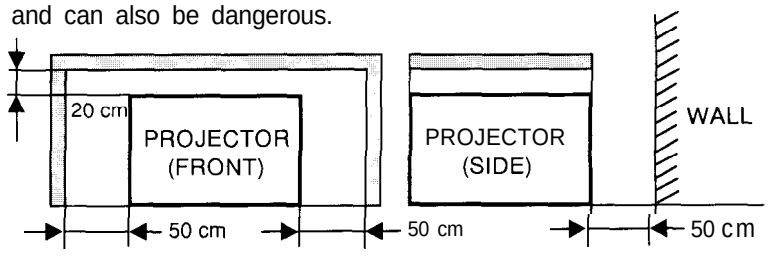

TABLE OF CONTENTS

	PAGE
INTRODUCTION	5
COMPATIBILITY	5
IMAGE RESOLUTION	5
PORTABILITY	5
UNPACKING THE PROJECTOR	5
TRADEMARKS	5
POWER REQUIREMENT	6
DESCRIPTION	7
SETTING-UP THE PROJECTOR	8-9
POSITIONING	8
ROOM LIGHT	8
VENTILATION	8
LEVELING AND ELEVATING ADJUSTMENTS	9
MOVING THE PROJECTOR	9
CONNECTING THE PROJECTOR	10-17
CONNECTING THE COMPUTER	1 o-14
Connecting an IBM-compatible desktop computer	11
Connecting a Macintosh desktop computer	12
Connecting an IBM-compatible laptop computer	13
Connecting a Macintosh PowerBook computer	14
CONNECTING THE VIDEO EQUIPMENT	15-16
CONNECTING AN EXTERNAL SPEAKER	17
OPERATION OF CONTROLS	18-20
TOP OF THE PROJECTOR	18-19
REAR OF THE PROJECTOR	20
OPERATION OF REMOTE CONTROL	21-23
REMOTE CONTROL BATTERY INSTALLATION	23
USING THE REMOTE CONTROL UNIT	23
CONTROL THE PROJECTOR	24-26
DIRECT OPERATION	24
MENU OPERATION	25-26
USING THE PROJECTOR	27-46
TO TURN ON THE PROJECTOR	27
TO TURN OFF THE PROJECTOR	27
DIRECT OPERATION	28
MODE SELECT	28
SOUND VOLUME ADJUSTMENT	28
SOUND MUTE FUNCTION	28
ZOOM ADJUSTMENT	28
FOCUS ADJUSTMENT	28
NORMAL PICTURE FUNCTION	28
FREEZE PICTURE FUNCTION	28
FINE SYNC ADJUSTMENT	28
MENU OPERATION	29-46
MODE SELECT	29
SOUND ADJUSTMENT	30
LANGUAGE ADJUSTMENT	30
MENU EXIT	30
COLOUR SYSTEM SELECT	31
PICTURE IMAGE ADJUSTMENT	32
PICTURE SCREEN ADJUSTMENT	33
COMPUTER SYSTEM SELECT	34
COMPATIBLE COMPUTER SPECIFICATION	35
PICTURE IMAGE ADJUSTMENT	36
PICTURE POSITION ADJUSTMENT	37
PC ADJUSTMENT	38-41
AUTO IMAGE FUNCTION	42
PICTURE SCREEN ADJUSTMENT	43
OTHER FUNCTION SETTING	44-46
AUTORETRACT	44-45
BLUE BACK	44-45
DISPLAY	44-45
CEILING	44-45
REAR	44-45
LAMP AGE	46
AIR FILTER CARE AND CLEANING	47
TEMPERATURE WARNING INDICATOR	47
LAMP REPLACEMENT	48
CLEANING THE LENS	49
TROUBLESHOOTING	49-50
TECHNICAL SPECIFICATIONS	51

INTRODUCTION

The projector is a multimedia projector designed for portability, durability, and ease of use. The projector utilizes built-in multimedia features, a palette of 16.77 million colours, and active matrix liquid crystal display (LCD) technology.

COMPATIBILITY

The projector is compatible with many different types of personal computers and video devices, including;

- IBM-compatible computers, including laptops, up to 1280 x 1024 resolution.
- Apple Macintosh and PowerBook computers up to 1280 x 1024 resolution.
- Various VCRs, video disc players, video cameras, satellite TV tuners or other AV equipment using any of the worldwide video standards, including NTSC, NTSC4.43, PAL and SECAM.

IMAGE RESOLUTION

The resolution of the projector's projected image is 1024 x 768. The projector displays computer images just as they appear on your computer's monitor. Screen resolutions between 1024 x 768 and 1280 x 1024 are compressed to 1024 x 768. The projector cannot display screen resolutions above 1280 x 1024. If your computer's screen resolution is higher than 1280 x 1024, reset it to a lower resolution before you connect the projector.

PORTABILITY

The projector is extremely compact in size and weight. Having a sophisticated shape like an attache case with a retractable carrying handle, the projector will help you make powerful presentations wherever you go. To strengthen the portability, the LENS RETRACT function is designed to protect the lens from being damaged during transportation. With this function, the lens is pulled in when not in use.

UNPACKING THE PROJECTOR

The projector comes with the parts shown listed below. Check to make sure all are included. If any parts are missing, contact an authorized dealer or service station.

- Owner's Manual.
- AC Power Cord.
- Remote Control Transmitter Unit and batteries.
- Lens Cover.
- Protective Dust Cover.
- VGA Cable.
- VGA/MAC Adapter.
- Mouse Cable for PS/2 port.
- Mouse Cable for serial port.
- Mouse Cable for ADB port.

TRADEMARKS

- Apple, Macintosh, and PowerBook are trademarks or registered trademarks of Apple Computer, Inc.
- IBM and PS/2 are trademarks or registered trademarks of International Business Machines, Inc.

POWER REQUIREMENTS

Your projector uses nominal input voltages of 200-240 VAC. The projector automatically selects the correct input voltage. The projector is designed to work with single-phase power systems having **a** grounded neutral conductor. To reduce the risk of electrical shock, do not plug into any other type of power system.
Consult your authorized dealer or service station if you are not sure what type of power is supplied to your building.

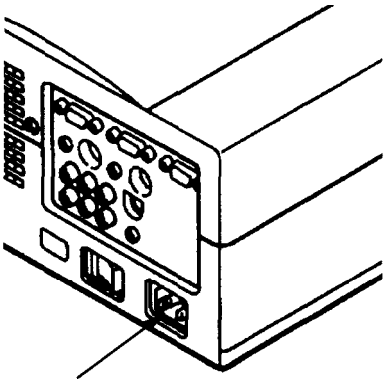

Connect the AC power supply cord (supplied) to the projector.
The socket-outlet must be near this equipment and must be easily accessible.

DESCRIPTION

FRONT

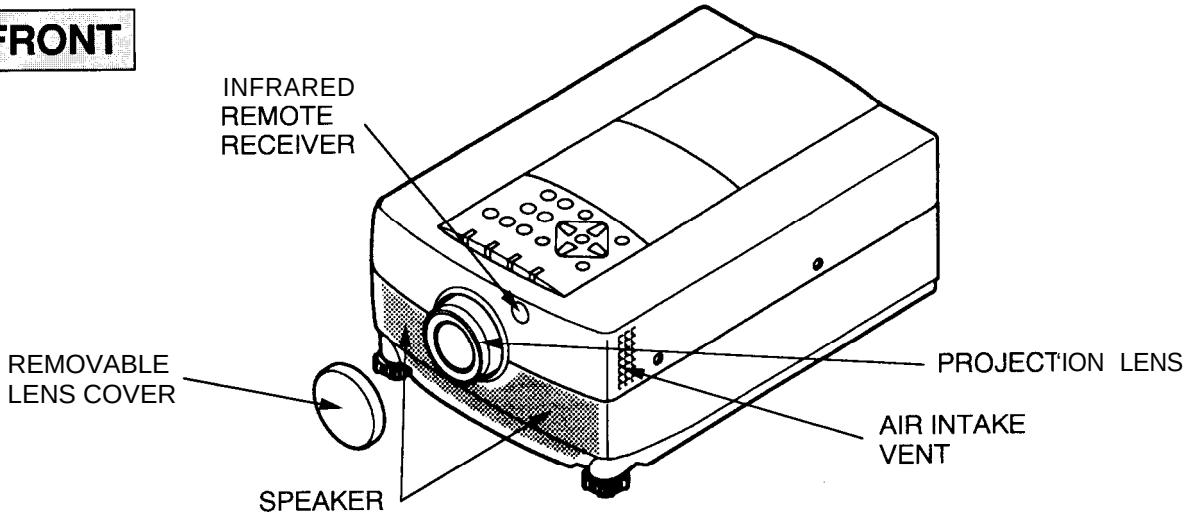

REAR

EXHAUST VENT

CAUTION HOT AIR !
Air blown from the exhaust vent is hot. Observe the following when handling your projector or choosing a location to install it.

- Keep heat-sensitive objects away from the exhaust port.
- If you set the projector on top of a metallic surface, the surface will become hot because of the hot air exhaust, Be careful when handling.
- Do not touch the cabinet near to the exhaust vent area, and especially screws and metallic parts. These parts will become hot while the projector is used.

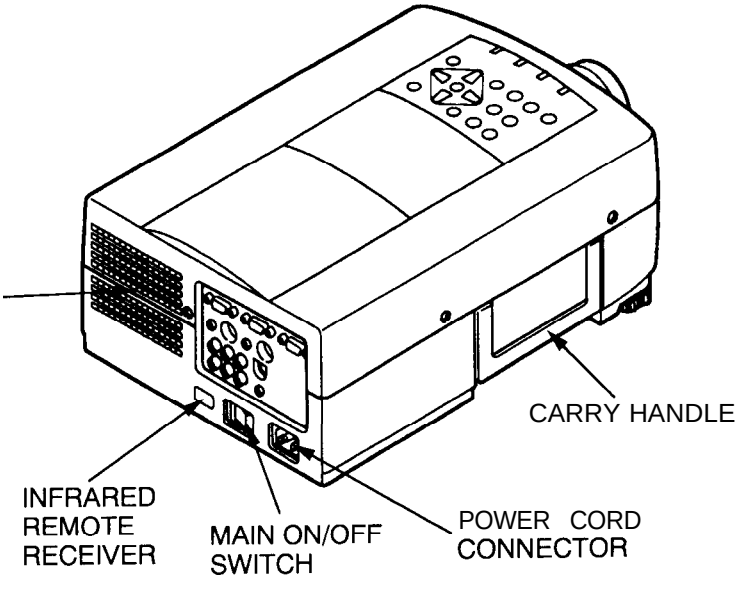

BOTTOM

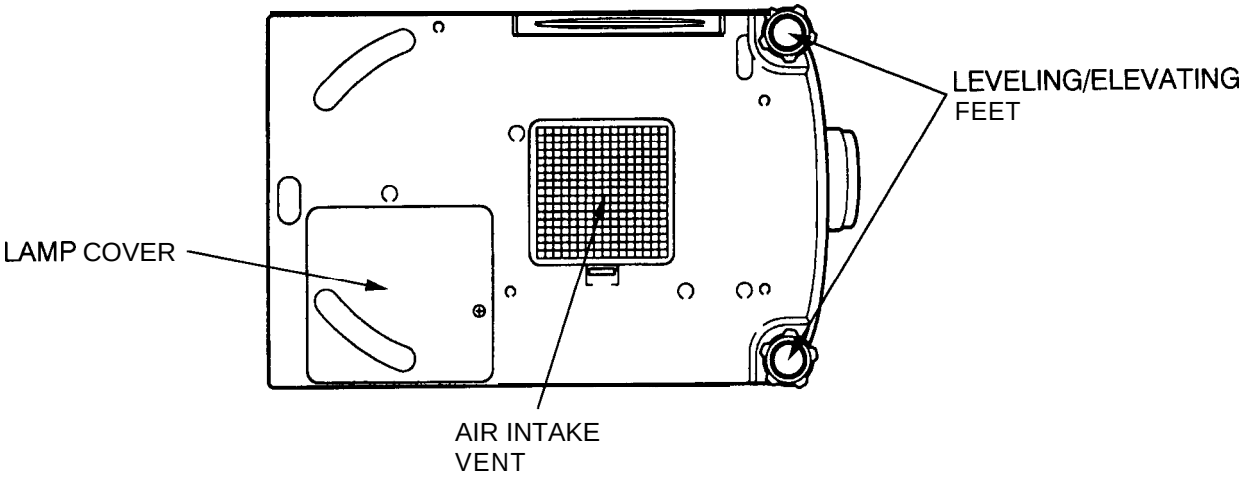

SETTING-UP THE PROJECTOR

POSITIONING:

- This projector is basically designed to project on a flat projection surface.
- This projector can be focused from 1 .1m ~14.3m.
- Use the illustration below as an example when positioning the projector to the screen.

ROOM LIGHT

Ideally the projector should be placed in a room with limited light. Picture quality will be directly affected by lighting conditions.

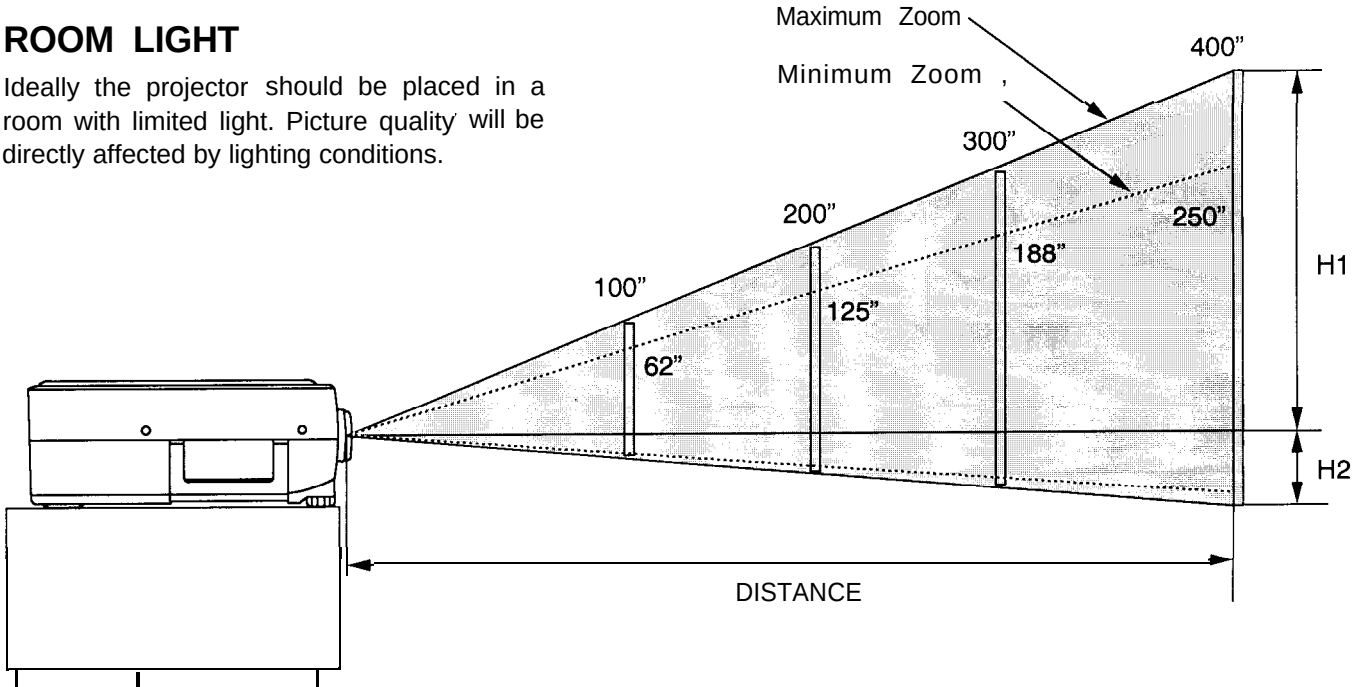

Screen Size	Max. Zoom	32”	60”	100”	150”	200”	300”	400”
	Min. Zoom	20”	37”	62”	94”	125”	188”	250”
Distance		1.1 m	2.1 m	3.6 m	5.4 m	7.2 m	10.7 m	14.3 m

Screen Size	20”	60”	100”	150”	200”	300”	400”
(W x H) mm	406 × 305	1219 x 914	2032 x 1524	3048 × 2286	4064 × 3048	6096 × 4572	8128 × 6096
Height (H1)	271 mm	813 mm	1355 mm	2033 mm	2711 mm	4066 mm	5422 mm
Height (H2)	34 mm	101 mm	169 mm	253 mm	337 mm	506 mm	674 mm

VENTILATION

This projector is equipped with a cooling fan to protect it from overheating. Pay attention to the following to ensure the ventilation and avoid a possible risk of fire and malfunction.

- Do not cover the vents with papers or other materials.
- Keep the rear grill at least one meter away from any object.
- Make sure that there are no objects under the projector. An object under the projector may prevent the projector from taking the cooling air through the bottom vent.

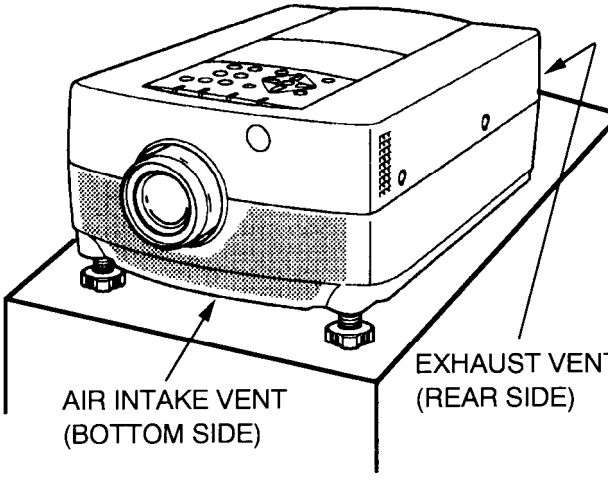

LEVELING AND ELEVATING ADJUSTMENTS

Two feet adjust the projection angle.
The projection angle can be adjusted up to 6 ° degrees by rotating the two (left and right) feet located on the bottom of the projector.

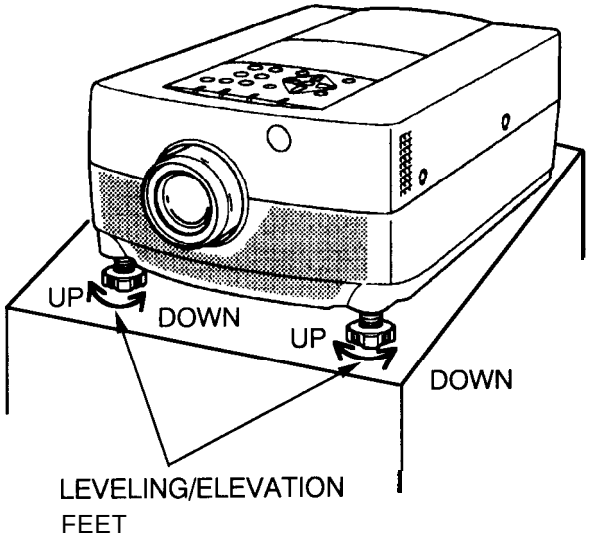

MOVING THE PROJECTOR

Use the carry handle when moving the projector.

a Retract the lens, replace the lens cover and rotate the leveling/elevation feet fully clockwise when moving the projector to prevent damage to the projector.

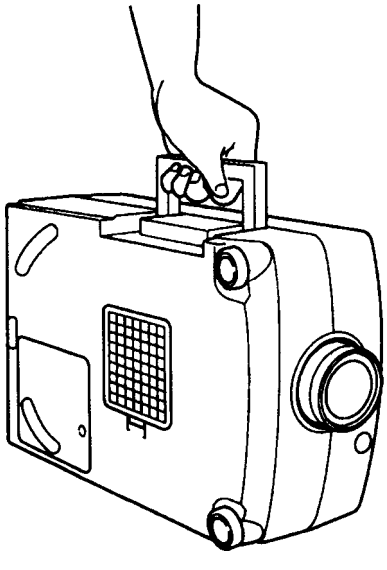

CAUTION IN CARRYING OR TRANSPORTING THE PROJECTOR

- Do not drop or give a shock to the projector, otherwise damage or mulfunction may result.
- When carrying the projector, use a Sanyo recommended Carrying Case.
- Do not transport the projector by using a courier or transport service in an unsuitable transport case. This may cause damage to the projector. To transport the projector through a courier or transport service, use a Sanyo recommended Case.
- For a carrying or transportation cases, contact a Sanyo authorized dealer.

CONNECTING THE PROJECTOR

Your projector is equipped with various audio/video inputs and outputs including Computer HDB15-pin (VGA) terminals, Monitor HDB15-pin (VGA) terminals and S-VHS video .

CONNECTING THE COMPUTER

CONNECTING TO THE COMPUTER INPUT HDB15-PIN (VGA) TERMINALS (1 and 2)

Personal computers can be connected to the HDB15-pin (VGA) terminal on the projector.

- Connect the computer to these terminals using the VGA cable and VGA/MAC adapter (provided).

CONNECTING TO THE MONITOR OUTPUT HDB15-PIN (VGA) TERMINAL

This terminal contain the information that is viewed on the screen.
Monitor can be connected to the HDB15-pin (VGA) terminal on the projector.

- Connect the monitor to this terminal using the monitor cable (not provided).

HDB15-PIN
TERMINAL

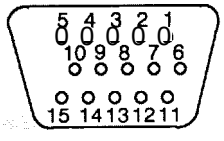

Pin No./Signal		Pin No./Signal	
1	Red input	9	Non Connect
2	Green input	10	Ground (Vert. sync.)
3	Blue input	11	Sense 0
4	Sense 2	12	Sense 1
5	Ground (Horiz. sync.)	13	Horiz. sync.
6	Ground (Red)	14	Vet-t. sync.
7	Ground (Green)	15	Reserved
8	Ground (Blue)		

CONNECTING TO THE COMPUTER AUDIO INPUT JACKS (1 and 2)

. Connect audio outputs from your computer to these jacks using the audio cable (not provided).

CONNECTING TO THE MULTI-POLE 12-PIN (CONTROL PORT) CONNECTORS (1 and 2)

- If vou wish to control the computer with projector's remote control unit, you must connect control port (PS/2, Serial or ADB port) on your computer to projector's control port with cable. (three type cables provided)

■ CONTROL PORT

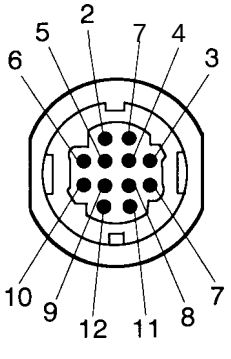

	PS/2 Port	Serial Port	ADB Port
1		TxD	
2	CLK		ADB
3	DATA		
a			
5		※RxD	
6			
7		READY	
6			
9	GND	GND	GND
10			
11			
12			

CONTROL PORT CABLE REMOVAL HINT

Disconnect control port cable with following steps.

1. Hold the portion (A) of the connector with one hand.
2. Pull the portion (B) arrow direction and remove connector.

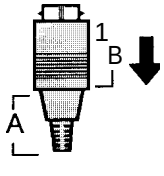

※ **NOTE:** The RxD port (5 pin on the Serial Port) is provided on control port 2 connector only. If you control the projector by computer, you must connect control port 2 connector.

Connecting an IBM-compatible desktop computer

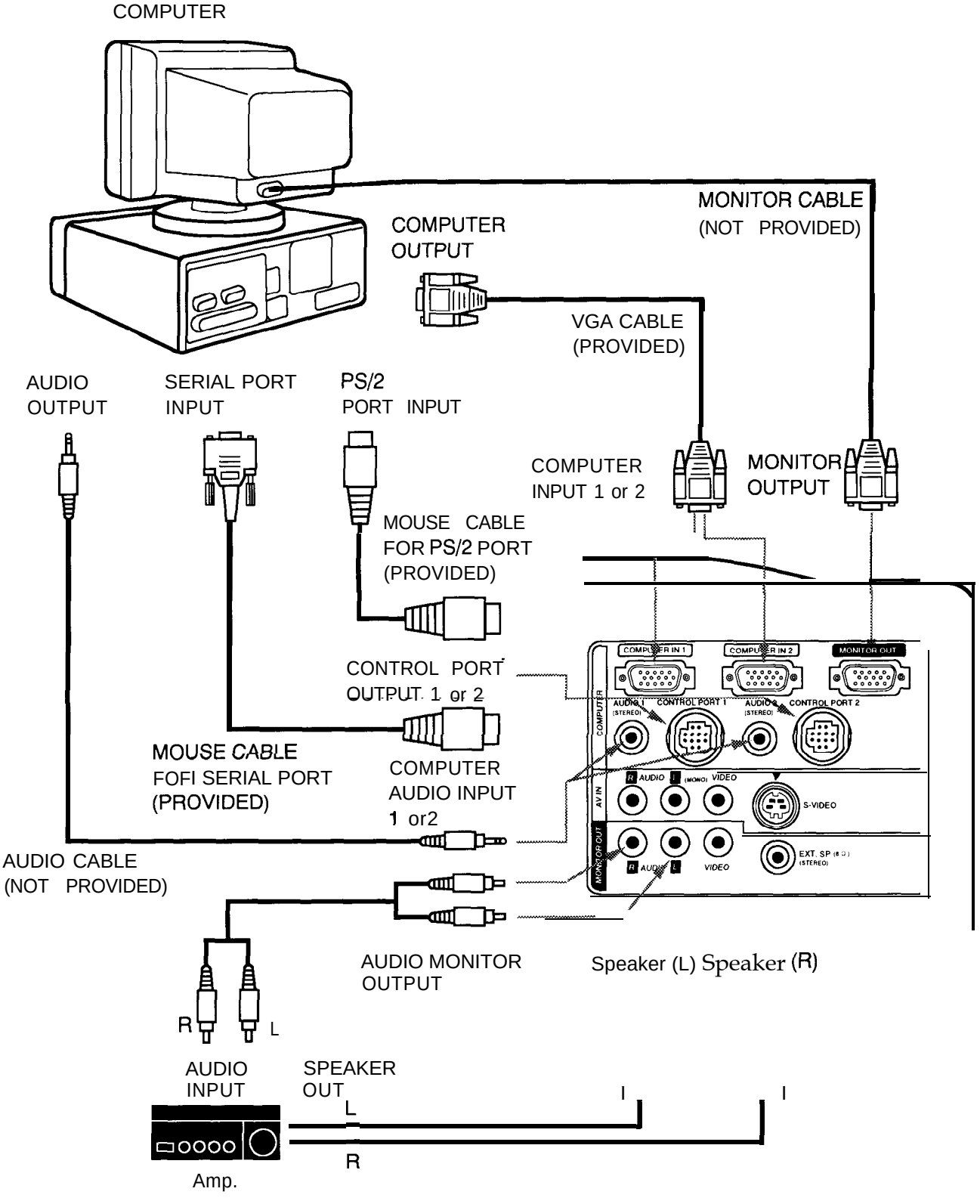

NOTE: The hook up should be done as per the above illustration. After hook up, turn on the projector, monitor, computer, in that order.

Connecting a Macintosh desktop computer

COMPUTER

MONITOR CABLE
(NOT PROVIDED)

COMPUTER
OUTPUT

VGA CABLE
(PROVIDED)

VGA/MAC ADAPTER
(PROVIDED)

AUDIO
OUTPUT

ADB
PORT INPUT

COMPUTER
INPUT 1 or 2

MONITOR
OUTPUT

MOUSE CABLE
FOR ADB PORT
(PROVIDED)

AUDIO CABLE
(NOT PROVIDED)

CONTROL PORT
OUTPUT 1 or 2

COMPUTER
AUDIO INPUT
1 or 2

AUDIO MONITOR
OUTPUT

Speaker (L) Speaker (R)

R L

AUDIO
INPUT

SPEAKER
OUT

L

Amp.

R

Set the slide switches as shown in the table below depending on the RESOLUTION MODE that you want to use before you turn on the projector and computer.

RESOLUTION MODE	SW1	SW2	SW3	SW4	SW5	SW6
13" MODE (640 × 480)	ON	OFF	OFF	OFF	OFF	OFF
16" MODE (832 × 624)	OFF	OFF	OFF	OFF	OFF	ON
19" MODE (1024 × 768)	OFF	OFF	OFF	ON	OFF	OFF
21" MODE (1152 × 870)	ON	ON	ON	OFF	OFF	OFF

VGA/MAC ADAPTER

SW1 ~ SW6

ON

OFF

ON

1 2 3 4 5 6

NOTE: The hook up should be done as per the above illustration. After hook up, turn on the projector, monitor, computer, in that order.

Connecting an IBM-compatible laptop computer

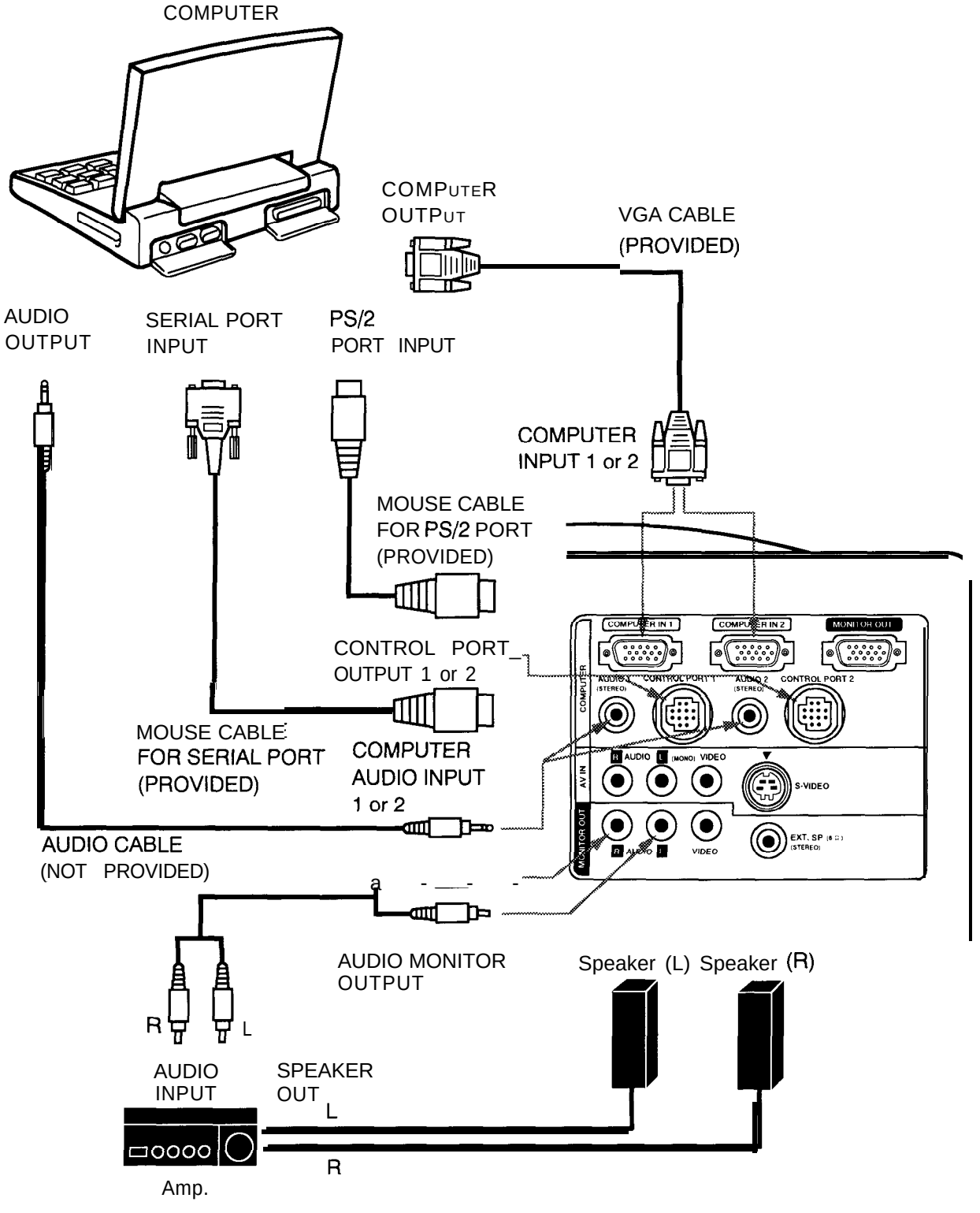

NOTE: The hook up should be done as per the above illustration. After hook up, turn on the projector, computer, in that order.

Connecting a Macintosh PowerBook computer

COMPUTER

The Macintosh PowerBook requires the use of the PowerBook Video Adapter shipped with the PowerBook.

TO POWERBOOK VIDEO ADAPTER

VGA CABLE (PROVIDED)

VGA/MAC ADAPTER (PROVIDED)

AUDIO OUTPUT

ADB PORT INPUT

COMPUTER INPUT 1 or 2

MOUSE CABLE FOR ADB PORT (PROVIDED)

CONTROL PORT OUTPUT 1 or 2

AUDIO CABLE (NOT PROVIDED)

COMPUTER AUDIO INPUT 1 or 2

AUDIO MONITOR OUTPUT

Speaker (L) **Speaker** (R)

R L

AUDIO INPUT

SPEAKER OUT

L

Amp.

R

Set the slide switches as shown in the table below depending on the RESOLUTION MODE that you want to use before you turn on the projector and computer.

RESOLUTION MODE	SW1	SW2	SW3	SW4	SW5	SW6
13" MODE (640 × 480)	ON	OFF	OFF	OFF	OFF	OFF
16" MODE (832 × 624)	OFF	OFF	OFF	OFF	OFF	ON
19" MODE (1024 × 768)	OFF	OFF	OFF	ON	OFF	OFF
21" MODE (1152 × 870)	ON	ON	ON	OFF	OFF	OFF

VGA/MAC ADAPTER

SW1 ~ SW6

ON

OFF

ON

1 2 3 4 5 6

NOTE: The hook up should be done as per the above illustration. After hook up, turn on the projector, computer, in that order.

CONNECTING THE VIDEO EQUIPMENT

CONNECTING TO THE AV INPUT JACKS

Connect to the video and audio outputs of a VCR, video disc player, video camera, satellite TV tuner or other AV equipment.

- Connect audio/video outputs from external sources to these input jacks using the audio/video cable.
- If the audio signal from the AV equipment is stereo, be sure to connect the right and left channels to the respective right and left audio input jacks.
- If the external audio signal is monaural, connect it to the left jack.

S-VHS FORMAT VCR CONNECTION

The AV input includes an extra video input jack marked S-VIDEO to allow connection to an S-VHS format VCR that has separate Y/C video signals. The S-VIDEO jack has priority over the VIDEO jack.

CONNECTING TO THE VIDEO MONITOR OUTPUT JACK

This jack will contain the video information of the selected program source video only. If you select program source Computer 1 or Computer 2, there is no signal.
Connect video input from AV equipment to this jack by PHONO type cable.
Whenever the S-VIDEO signal source is viewed on the screen, the video signal available at the MONITOR OUTPUT jack will be in black and white (monochrome).

CONNECTING TO THE AUDIO MONITOR OUTPUT JACKS

These jacks will contain the audio information of the selected program source being viewed on the screen (Computer 1, Computer 2 or Video 1). If you have selected program source Computer 1 the audio signal connected to the Computer 1 audio input jack will be available at the audio monitor output jacks.

- If the audio input of the audio equipment is stereo, be sure to connect the right and left channels to the respective right and left jacks.

. If the audio input of the audio equipment is monaural, connect it to the left jack.

Connecting the Video Equipment

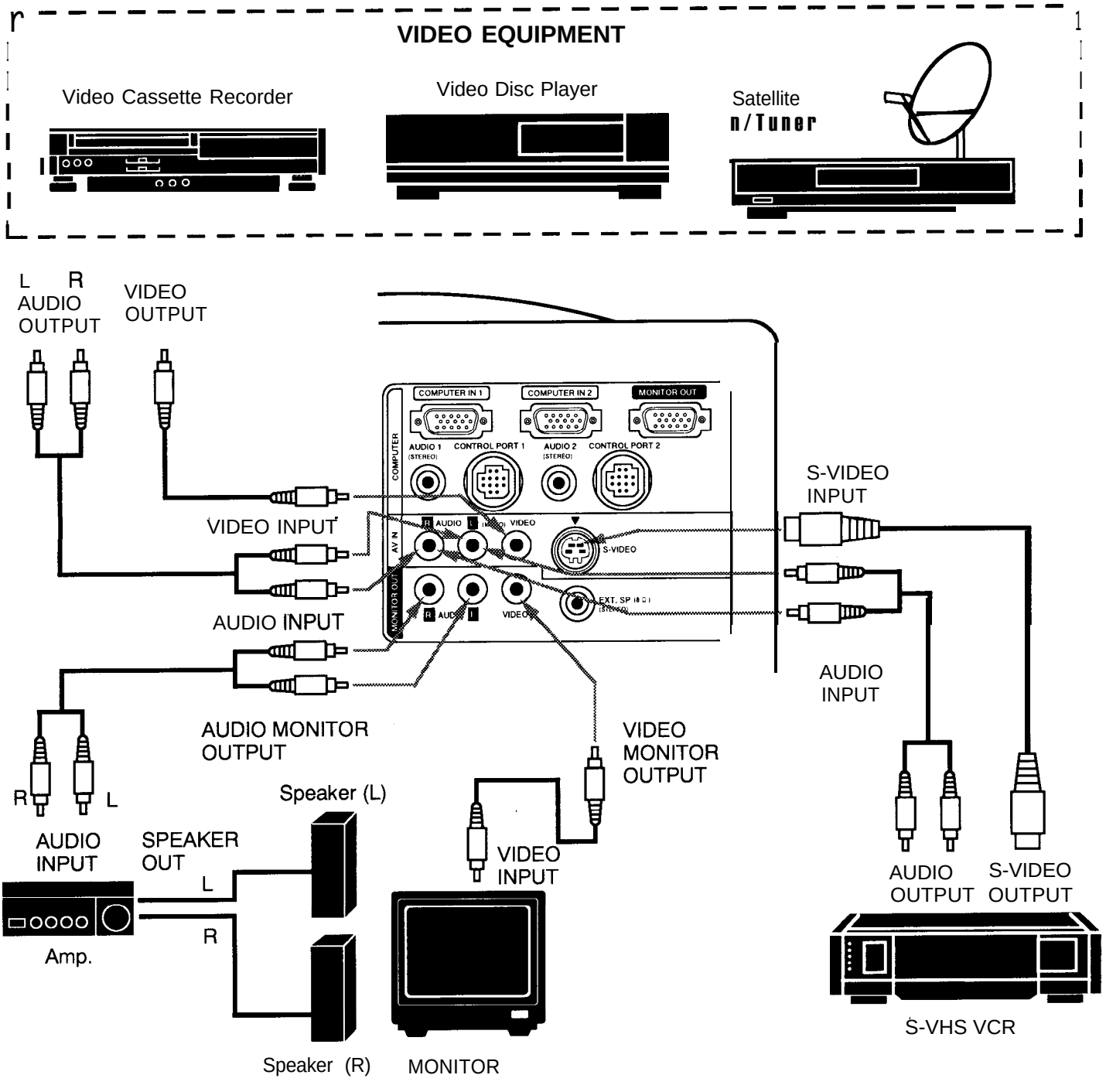

NOTE: The hook up should be done as per the above illustration. After hook up, turn on the projector, video equipment, in that order.

CONNECTING AN EXTERNAL SPEAKER

CONNECTING TO THE EXT. SP. JACK (3.5mm mini stereo type)

This jack outputs stereo speaker sound which viewing on screen. If you use external speaker system, connect stereo type external speaker jack. Internal speaker sound is disconnected when speaker jack is connected.

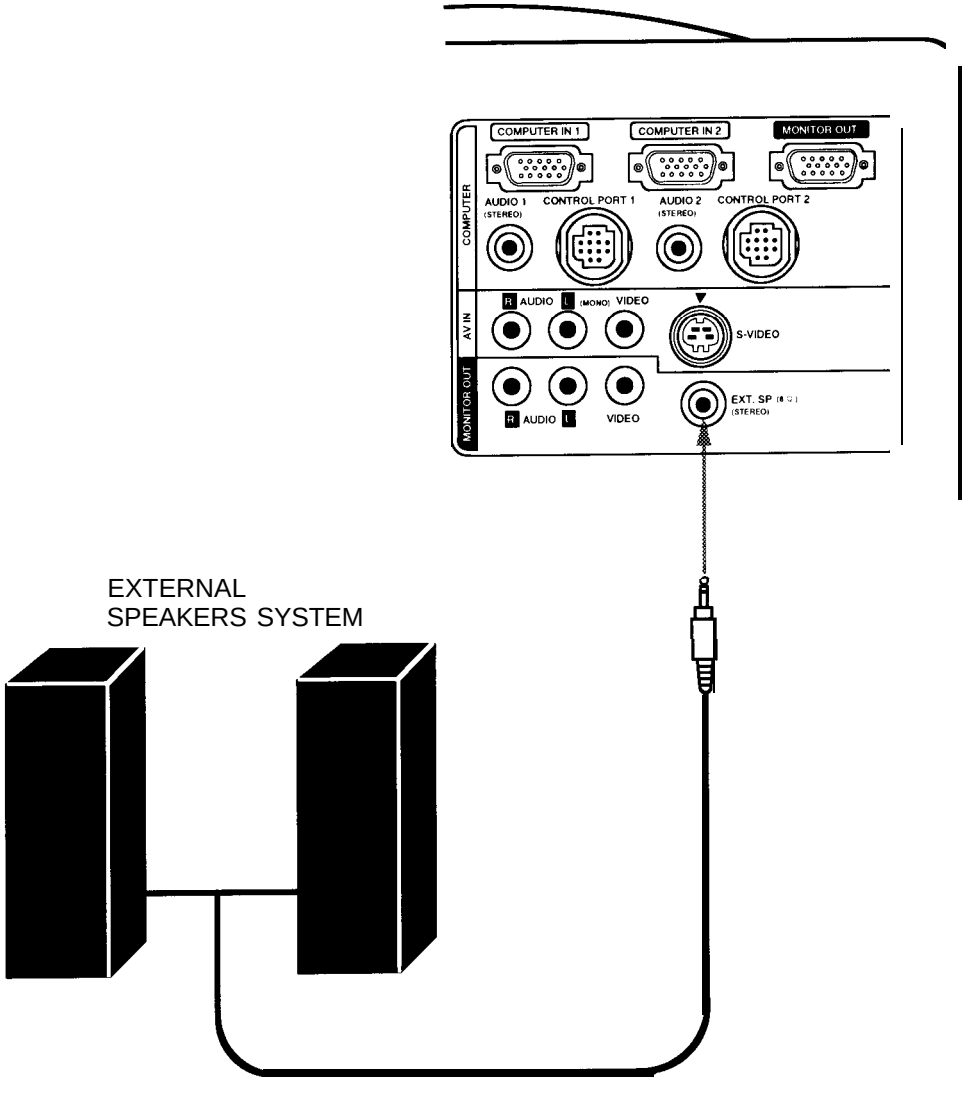

OPERATION OF CONTROLS

TOP OF THE PROJECTOR

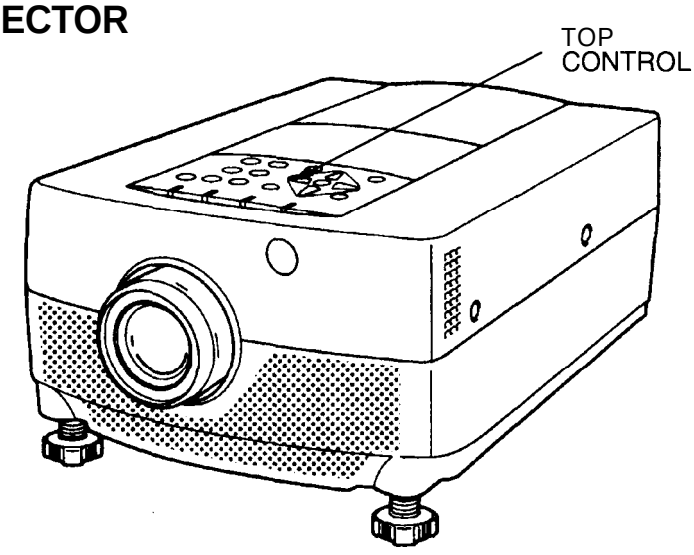

TOP CONTROL

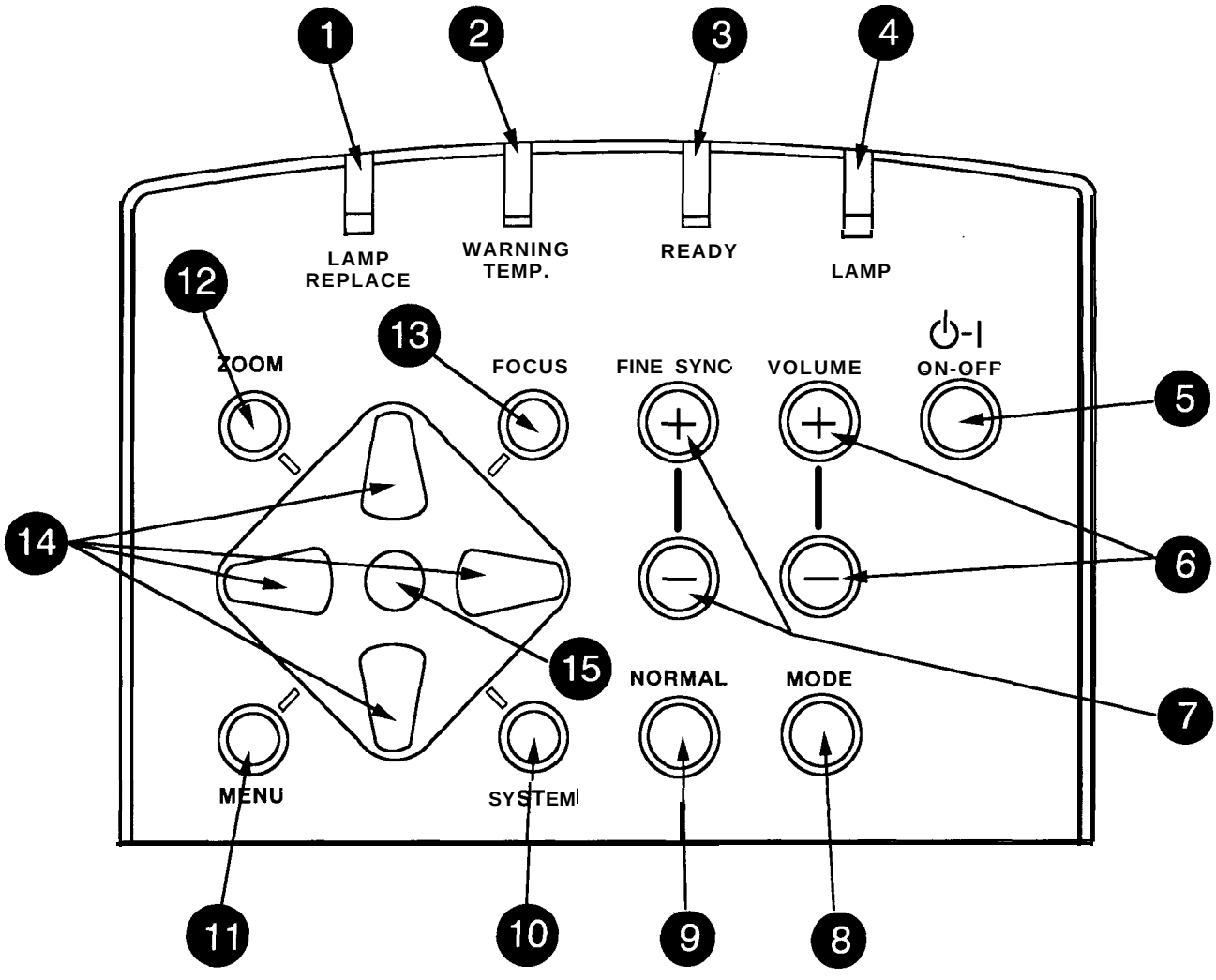

1 LAMP REPLACEMENT INDICATOR
Light is orange when projection lamp is nearing end of service life.

2 TEMPERATURE WARNING INDICATOR
Flashes red when internal projector temperature is too high.

3 READY INDICATOR
Light is green when projector lamp is ready to be turned on.

4 LAMP POWER INDICATOR
Light is dim when the projector is on.
Light is brightened when the projector is in stand-by mode.

5 LAMP POWER ON/OFF BUTTON
Used to turn projection lamp on or off.

6 VOLUME **BUTTONS**
Used to adjust volume.

7 FINE SYNC **BUTTONS**
Used to adjust fine sync.

8 MODE BUTTON
Used to select video source.
(Computer 1, Computer 2 or Video 1 Input)

9 NORMAL BUTTON
Used to reset to normal picture adjustment preset by factory.

10 SYSTEM BUTTON
- Computer Mode
  Use this button, the POINT UP/DOWN/LEFT/RIGHT buttons and the SELECT button to select computer system.
- VIDEO **Mode**
  Use this button, the POINT UP/DOWN/LEFT/RIGHT buttons and the SELECT button to select colour system.

11 MENU **BUTTON**
This button will activate the MENU operation.
Use this button, the POINT UP/DOWN/LEFT/RIGHT buttons and the SELECT button to make adjustments to the projector's setting in MENU operation.

12 ZOOM **BUTTON**
Used to select power zoom lens adjust.

13 FOCUS **BUTTON**
Used to select focus adjust.

14 **POINT UP/DOWN/LEFT/RIGHT BUTTONS**
- To select an item on the MENU that you want to adjust. To select an item, move the arrow by pressing these buttons (UP, DOWN, LEFT or RIGHT).
- Used to operate power zoom lens or power focus system. (Pressing these button either UP or DOWN)

15 SELECT BUTTON
This button has different functions depending on when used. This button is used to execute the item selected, to increase or decrease the values in certain items such as CONTRAST or BRIGHTNESS.

REAR OF THE PROJECTOR

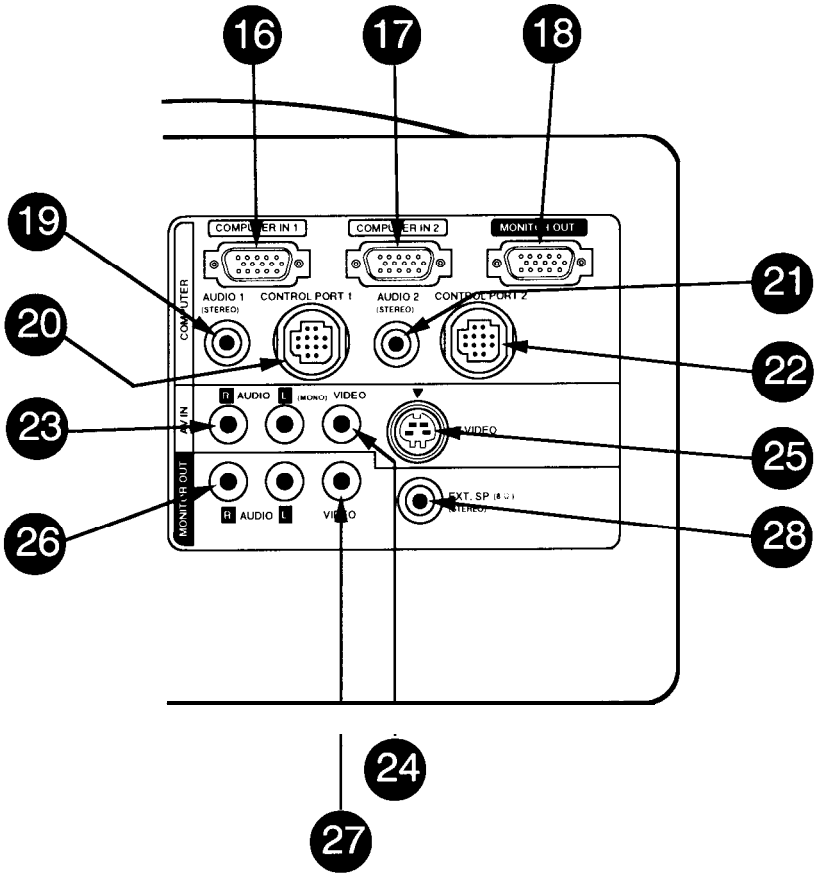

16 **COMPUTER INPUT-1 TERMINAL**
Used to connect a computer to the projector.

17 **COMPUTER INPUT-2 TERMINAL**
Used to connect a computer to the projector.

18 **MONITOR OUTPUT TERMINAL**
Used to connect a monitor to the projector.

19 **COMPUTER AUDIO INPUT-1 JACK**
mini stereo type
Used to connect a computer audio input to the projector.

20 **CONTROL PORT-1 CONNECTOR**
Used to connect a mouse cable to the projector.

21 **COMPUTER AUDIO INPUT JACK 2**
mini stereo type
Used to connect a computer audio input to the projector.

22 **CONTROL PORT-2 CONNECTOR (SERIAL PORT)**
Used to connect a mouse cable to the projector.

NOTE: Control port-2 connector can be also used as serial port.

23 **AUDIO INPUT JACKS**
Used to connect an audio input to the projector.

24 **VIDEO INPUT JACK**
Used to connect a video source to the projector.

25 **S-VIDEO INPUT JACK**
Used to connect a S-VHS video source to the projector.

26 **AUDIO MONITOR OUTPUT JACKS**
Permits audio connection to a monitor.

27 **VIDEO MONITOR OUTPUT JACK**
Permits video connection to a monitor.

28 **EXT. SP. JACK (3.5 mm mini stereo type)**
Used to connect an external speaker system.

OPERATION OF REMOTE CONTROL

This remote control unit is not only able to operate the projector but also usable as a wireless mouse for a PC. One pointing pad and two click buttons are used for wireless mouse operation.
Wireless mouse is usable when PC mouse pointer is displayed on the screen. When the menu or indicator of the projector is displayed on the screen instead of the PC mouse pointer, the wireless mouse cannot be used.

NOTE: To use the unit as a PC wireless mouse, connect the projector to the PC with the attached cable. Signals from the projector are transmitted to the PC, enabling the remote control unit of the projector to be used as a PC wireless mouse. (Refer to “CONNECTING THE PROJECTOR” in pages 10 to 14 for the connection.)

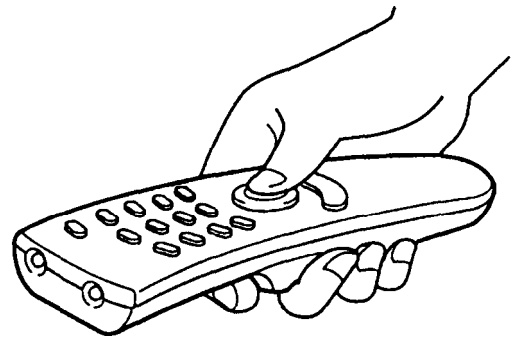

FRONT

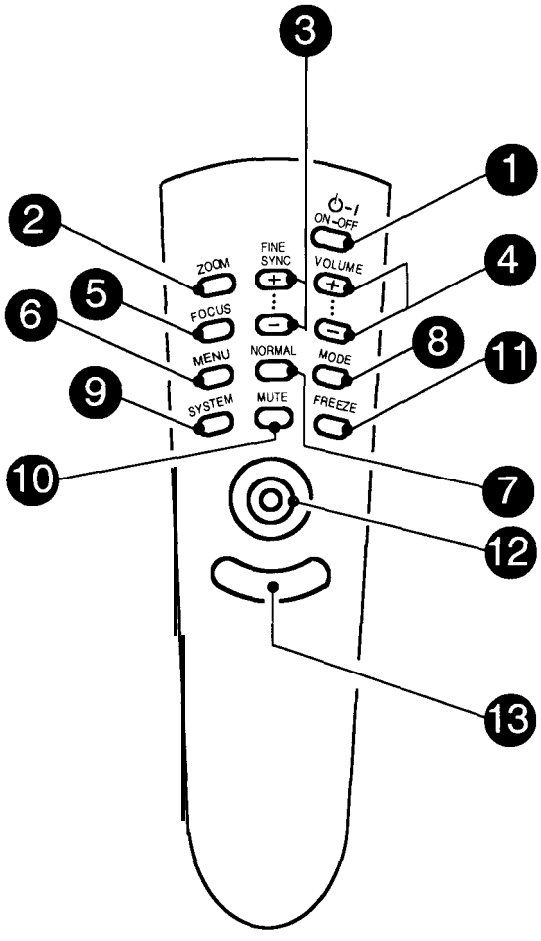

SIDE

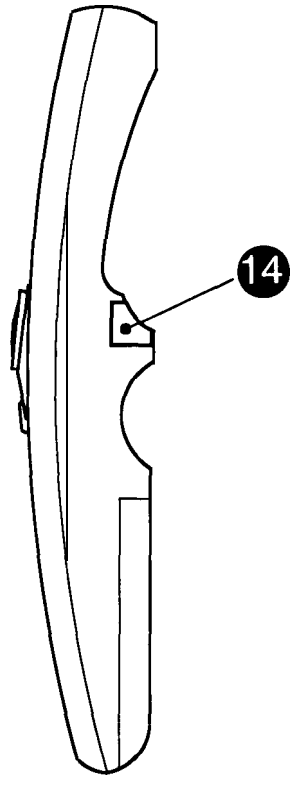

1 LAMP POWER ON/OFF BUTTON
Used to turn the projection lamp on or off.

2 ZOOM **BUTTON**
Used to select power zoom lens adjust.

3 FINE SYNC BUTTONS
Used to adjust fine sync.

4 VOLUME BUTTONS
Used to adjust volume.

5 FOCUS BUITON
Used to select focus adjust.

6 MENU BUITON
This button will activate the MENU operation. Use this button, the POINT UP/DOWN/LEFT/RIGHT button and the SELECT (REAR CLICK) button to make adjustments to the projector's setting in MENU operation.

7 NORMAL BUTTON
Use to reset to normal picture adjustment preset by factory.

0 MODE BUTTON
Used to select video source. (Computer 1, Computer 2 or Video 1 Input)

9 SYSTEM BUTTON
- **Computer Mode**
  Use this button, the POINT UP/DOWN/LEFT/RIGHT button and the SELECT (REAR CLICK) button to select computer system.

- VIDEO **Mode**
  Use this button, the POINT UP/DOWN/LEFT/RIGHT button and the SELECT (REAR CLICK) button to select colour system.

10 SOUND MUTE BUTTON
Used to mute sound.

11 FREEZE BUITON
Use this button to freeze on-screen image.

12 POINTING PAD
(POINT UP/DOWN/LEFT/RIGHT BUITON)
When in use as a remote for the project&.
To select an item on the MENU that you want to adjust. To select an item, move the arrow by pressing the pad upward, downward, leftward or rightward.
Used to operate power zoom lens or power focus system by pressing the pad either upward or downward.

When in use as a wireless mouse
Used to move the pointer. The pointer is moved according to the direction you are pressing.

13 FRONT CLICK **BUTTON**
This button has the same function as the right button in a PC mouse. Pressing this button does not affect any operation when in MENU mode.

14 SELECT (REAR CLICK) BUTTON
When in use as a remote for the projector.
This button has different functions depending on when used. This button is used to execute the item selected, to increase or decrease the values in certain items such as CONTRAST or BRIGHTNESS.

When in use as a wireless mouse
This button has the same function as the left button in a PC mouse.

REMOTE CONTROL BATTERY INSTALLATION

1 Remove the battery compartment lid.

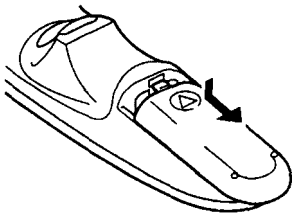

2 Slide the batteries into the compartment.

Note: For correct polarity (+ and - terminal), be sure the battery terminals are in contact with the pins in the compartment.

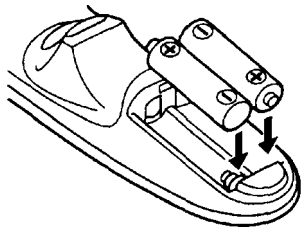

3 Replace the compartment lid,

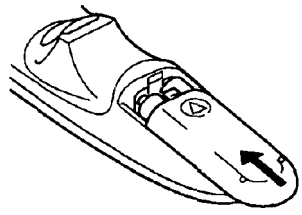

USING THE REMOTE CONTROL UNIT

Point the remote control toward the projector (Receiver window) whenever pressing the buttons. Maximum operating range for the remote control is about 5m and 60° front and rear of the projector.

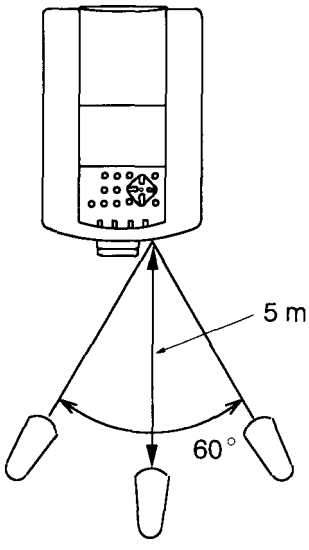

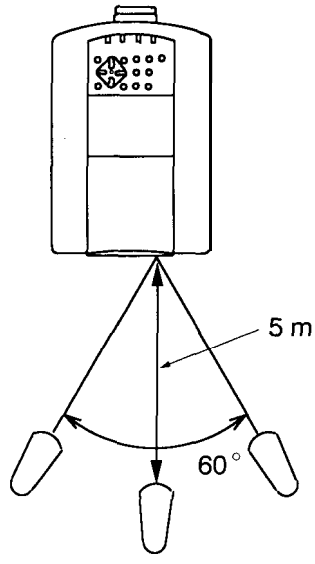

A

To insure safe operation, please observe the following precautions:

- Use (2) AA, UM3 or R06 type alkaline batteries,
- Change two batteries at the same time.
- Do not use a new battery with a used battery.
- Avoid contact with water.
- Do not drop the remote control unit.
- If batteries have leaked on the remote control, carefully wipe the case clean and load new batteries.

CONTROL THE PROJECTOR

The projector has two types of operation: DIRECT OPERATION and MENU OPERATION. DIRECT OPERATION allows you to operate the projector by using one button without showing the MENU. In MENU OPERATION mode, you display menus where you can adjust the projector's settings. Follow the instruction for each control.

DIRECT OPERATION

ADJUST ITEM	TOP CONTROL OF THE-PROJECTOR	REMOTE CONTROL UNIT
LAMP POWER ON/OFF	LAMP POWER ON-OFF BUTTON	LAMP POWER ON-OFF BUTTON
MODE SELECT	MODE BUTTON	MODE BUT-TON
SOUND VOLUME	VOLUME (+) and (−) BUTTONS	VOLUME (+) and (−) BUTTONS
SOUND MUTE	NOT AVAILABLE	MUTE BUTTON
ZOOM	ZOOM BUTTON POINT UP/DOWN BUTTONS	ZOOM BUT-I-ON POINT (UP/DOWN) BUTTON
FOCUS	FOCUS BUTTON POINT UP/DOWN BUTTONS	FOCUS BUTTON POINT (UP/DOWN) BUT-TON
NORMAL PICTURE	NORMAL BUTTON	NORMAL BUT-I-ON
FREEZE PICTURE	NOT AVAILABLE	FREEZE BUTTON
FINE SYNC.	FINE SYNC. (+) and (−) BUTTONS	FINE SYNC. (+) and (−) BUTTONS

MENU OPERATION

ADJUST ITEM	TOP CONTROL OF THE PROJECTOR	REMOTE CONTROL UNIT
MODE SELECT	MENU BUTTON POINT LEFT/RIGHT BUTTONS SELECT BUTTON POINT UP/DOWN BUTTONS SELECT BUTTON	MENU BUTTON POINT (LEFT/RIGHT) BUTTON SELECT (REAR CLICK) BUTTON POINT (UP/DOWN) BUTTON SELECT (REAR CLICK) BUTTON

1. COMPUTER/VIDEO MODE

ADJUST ITEM	TOP CONTROL OF THE PROJECTOR	REMOTE CONTROL UNIT
SOUND **SOUND VOLUME** **SOUND MUTE**	MENU BUTTON POINT LEFT/RIGHT BUTTONS SELECT BUTTON POINT UP/DOWN BUTTONS SELECT BUTTON	MENU BUTTON POINT (LEFT/RIGHT) BUTTON SELECT (REAR CLICK) BUTTON POINT (UP/DOWN) BUTTON SELECT (REAR CLICK) BUTTON
LANGUAGE		
MENU EXIT		
SETTING **AUTO RETRACT** **BLUE BACK** **DISPLAY** **CEILING** **REAR** **LAMP AGE**	MENU BUTTON POINT LEFT/RIGHT BUTTONS SELECT BUTTON POINT UP/DOWN BUTTONS SELECT BUTTON	MENU BUTTON POINT (LEFT/RIGHT) BUTTON SELECT (REAR CLICK) BUTTON POINT (UP/DOWN) BUTTON SELECT (REAR CLICK) BUTTON

2. VIDEO MODE

ADJUST ITEM	TOP CONTROL OF THE PROJECTOR	REMOTE CONTROL UNIT
COLOUR SYSTEM	MENU or SYSTEM BUTTON POINT LEFT/RIGHT BUTTONS SELECT BUTTON POINT UP/DOWN BUTTONS SELECT BUTTON	MENU or SYSTEM BUTTON POINT (LEFT/RIGHT) BUTTON SELECT (REAR CLICK) BUTTON POINT (UP/DOWN) BUTTON SELECT (REAR CLICK) BUTTON
PICTURE IMAGE **COLOUR** **TINT** **CONTRAST** **BRIGHTNESS** **SHARPNESS**	MENU BUTTON POINT LEFT/RIGHT BUTTONS SELECT BUTTON POINT UP/DOWN BUTTONS SELECT BUTTON	MENU BUTTON POINT (LEFT/RIGHT) BUTTON SELECT (REAR CLICK) BUTTON POINT (UP/DOWN) BUTTON SELECT (REAR CLICK) BUTTON
PICTURE SCREEN **WIDE** **REGULAR**		

3. COMPUTER MODE

ADJUST ITEM	TOP CONTROL OF THE PROJECTOR	REMOTE CONTROL UNIT
COMPUTER SYSTEM	MENU or SYSTEM BUTTON POINT LEFT/RIGHT BUT-TONS SELECT BUTTON POINT UP/DOWN BUT-TONS SELECT BUT-I-ON	MENU or SYSTEM BUTTON POINT (LEFT/RIGHT) BUTTON SELECT (REAR CLICK) BUT-TON POINT (UP/DOWN) BUT-TON SELECT (REAR CLICK) BUTTON
PICTURE IMAGE **FINE SYNC** **TOTAL DOTS** **CONTRAST** **BRIGHTNESS**	MENU BUTTON POINT LEFT/RIGHT BUTTONS SELECT BUT-TON POINT UP/DOWN BUT-TONS SELECT BUTTON	MENU BUT-TON POINT (LEFT/RIGHT) BUTTON SELECT (REAR CLICK) BUT-I-ON POINT (UP/DOWN) BUT-TON SELECT (REAR CLICK) BUT-TON
PICTURE POSITION	MENU BUTTON POINT LEFT/RIGHT BUT-TONS SELECT BUTTON POINT LEFT/RIGHT/UP/DOWN BUT-TONS SELECT BUTTON	MENU BUTTON POINT (LEFT/RIGHT) BUTTON SELECT (REAR CLICK) BUT-TON POINT (LEFT/RIGHT/UP/DOWN) BUT-TON SELECT (REAR CLICK) BUT-TON
PC ADJUSTMENT	MENU BUT-TON POINT LEFT/RIGHT BUT-TONS SELECT BUT-TON POINT UP/DOWN BUTTONS SELECT BUT-TON	MENU BUT-TON POINT (LEFT/RIGHT) BUTTON SELECT (REAR CLICK) BUTTON POINT (UP/DOWN) BUT-TON SELECT (REAR CLICK) BUT-TON
AUTO IMAGE **FINE SYNC** **TOTAL DOTS** **POSITION**	MENU BUTTON POINT LEFT/RIGHT BUT-TONS SELECT BUT-TON POINT UP/DOWN BUTTONS SELECT BUTTON	MENU BUT-I-ON POINT (LEFT/RIGHT) BUT-TON SELECT (REAR CLICK) BUTTON POINT (UP/DOWN) BUTTON SELECT (REAR CLICK) BUTTON
PICTURE SCREEN **TRUE** **EXPAND** **COMPRESSED** **PANNING**	MENU BUTTON POINT LEFT/RIGHT BUT-TONS SELECT BUT-TON POINT UP/DOWN BUT-TONS SELECT BUT-TON POINT LEFT/RIGHT/UP/DOWN BUTTONS	MENU BUTTON POINT (LEFT/RIGHT) BUT-TON SELECT (REAR CLICK) BUTTON POINT (UP/DOWN) BUT-TON SELECT (REAR CLICK) BUT-TON POINT (LEFT/RIGHT/UP/DOWN) BUT-TON

NOTES:

1. The MENU, once activated, will not disappear unless you have choose MENU EXIT operation. If you switch to DIRECT operation by pressing a DIRECT operation button while in MENU mode, the menus will disappear and the MENU operation will end.

2. You can use the REMOTE CONTROL UNIT or the TOP CONTROL OF THE PROJECTOR to operate the MENU operation.

USING THE PROJECTOR

TO TURN ON THE PROJECTOR

Connect the projector to a video source (Computer, VCR, Video Camera, Video Disc Player, etc.) using the appropriate terminals on the rear of the projector (See “CONNECTING THE PROJECTOR” section on pages 1 O-l 7).

Connect the projector’s AC power cord into a wall outlet and turn the MAINS ON/OFF switch (located on the rear of the projector) to the ON position. The LAMP POWER indicator will light RED, the READY indicator will light GREEN.

Press the LAMP POWER ON/OFF button on the remote control unit or on the projector to ON. The LAMP POWER indicator light will dim and the cooling fans will operate. The wait display appears on the screen and the count-down starts (20-19-18-...1). The signal from the video source appears after 30 seconds.

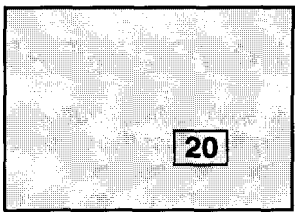

A **CAUTION:**
THIS PROJECTOR USES A METAL-HALIDE ARC LAMP. TO EXTEND THE LIFE OF THE LAMP, ONCE YOU HAVE TURNED IT ON, WAIT AT LEAST 5 MINUTES BEFORE TURNING IT OFF.

NOTE: TEMPERATURE WARNING INDICATOR flashes red, the projector will automatically turn off.
Wait at least 5 minutes before turning the projector on.

If the TEMPERATURE WARNING INDICATOR continues to flash, follow the procedures below:

(1). Press LAMP POWER ON/OFF button to OFF.
(2). Check the air filter for dust accumulation.
(3). Remove dust with vacuum cleaner (See “AIR FILTER CARE AND CLEANING” section on page 47.)
(4). Press LAMP POWER ON/OFF button to ON.

If the TEMPERATURE WARNING INDICATOR still continues to flash, call your authorized dealer or service station.

TO TURN OFF THE PROJECTOR

Press the LAMP POWER ON/OFF button on the remote control unit or on the projector. The “Power off ?’’ appears on the screen. Press again the LAMP POWER ON/OFF button to turn OFF the projector. The LAMP POWER indicator will light bright and READY indicator will turn off. The cooling fans will operate for 1 minute after the projector is turned off. (During this “cooling down” period, the projector cannot be turned on.) The READY indicator will light green again and the projector may be turned on by pressing the LAMP POWER ON/OFF button.

Power off ?

DIRECT OPERATION

MODE SELECT

Press the MODE button (located on remote control unit or on the projector) to select Computer 1, Computer 2 or Video 1 Input. The “Computer 1”, “Computer 2” or “Video 1” display will appear on the screen for a few seconds.

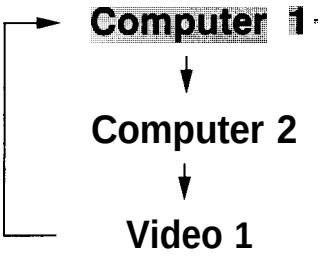

SOUND VOLUME ADJUSTMENT

Press the VOLUME buttons (located on remote control unit or on the projector) to adjust the volume. The volume display will be displayed on the screen for a few seconds.
Pressing volume (+) will increase volume and increase the number on the screen.
Pressing volume (-) will decrease volume and decrease the number on the screen.

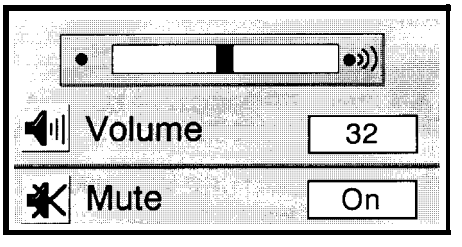

SOUND MUTE FUNCTION

Pressing the MUTE button on the remote control unit will mute audio. Press the MUTE button again to restore audio to its previous level. The mute display will be displayed on the screen for a few seconds.

ZOOM ADJUSTMENT

Press the ZOOM button (located on remote control unit or on the projector) and press POINT UP/DOWN button(s) to obtain your desired picture size. The Zoom display will be displayed on the screen for a few seconds.
For a larger picture, press (UP) and for a smaller picture, press (DOWN).

Zoom

FOCUS ADJUSTMENT

Press the FOCUS button (located on remote control unit or on the projector) and press POINT UP/DOWN button(s) to obtain a sharper, crisper picture. The Focus display will be displayed on the screen for a few seconds.

Focus

NORMAL PICTURE FUNCTION

The normal picture level is factory preset on the projector and can be restored anytime by pressing the NORMAL button (located on remote control unit or on the projector). The “Normal” display will be displayed on the screen for a few seconds.

Normal

FREEZE PICTURE FUNCTION

Press the FREEZE button on the remote control unit, and the still picture will remain on-screen. This function is cancelled when the FREEZE button is pressed again or any other function button is pressed.

NOTE: Your computer or video equipment is not affected by this function, and will continue to run.

FINE SYNC ADJUSTMENT

Press the FINE SYNC (+) or (-) buttons (located on remote control unit or on the projector) to eliminate flicker from the display on computer mode. The Fine sync display will be displayed on the screen. Press the MENU button (located on remote control unit or on the projector). The Fine sync display will disappear.

NOTE: The projector may not reproduce a proper image for some SXGA signals. Since SXGA (1280 x 1024) image is converted to XGA (1024 x 768) image by partial scan, some lines and dots of the image do not appear. Some video noise of flicker on this compressed SXGA image cannot be eliminated even though you try to make a FINE SYNC adjustment.

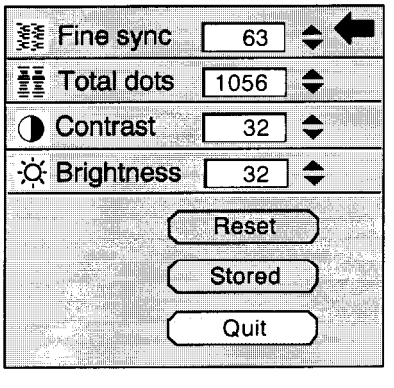

MENU OPERATION

In MENU OPERATION mode, you display menus where you can adjust the projector's settings. You can use the TOP CONTROL OF THE PROJECTOR or the REMOTE CONTROL UNIT.

TOP CONTROL OF THE PROJECTOR

POINT UP BUTTON

POINT LEFT BUTTON

POINT RIGHT BUTTON

SELECT BUTTON

MENU

SYSTEM

SYSTEM BUTTON

MENU BUTTON

POINT DOWN BUTTON

REMOTE CONTROL UNIT

MENU BUTTON

SYSTEM BUTTON

SELECT (REAR CLICK) BUTTON

POINT (UP/DOWN/LEFT/RIGHT) BUTTON

Pressing the button upward, downward, leftward or rightward.

MODE SELECT

You can select a mode used in the MENU among computer 1, computer 2 and video 1.

1. Press the MENU BUTTON and the MAIN MENU DISPLAY dialog box will appear.
2. Press the POINT LEFT/RIGHT BUTTON(s) to select Computer or Video and press the SELECT (REAR CLICK) BUTTON. Another dialog box MODE DISPLAY will appear.
3. Press the POINT DOWN BUTTON and a red arrow will appear.
4. Move the arrow to the mode you want (computer 1, computer 2 or video 1) to use by pressing the POINT UP/DOWN BUTTON(s) and then press the SELECT (REAR CLICK) BUTTON.

MAIN MENU DISPLAY

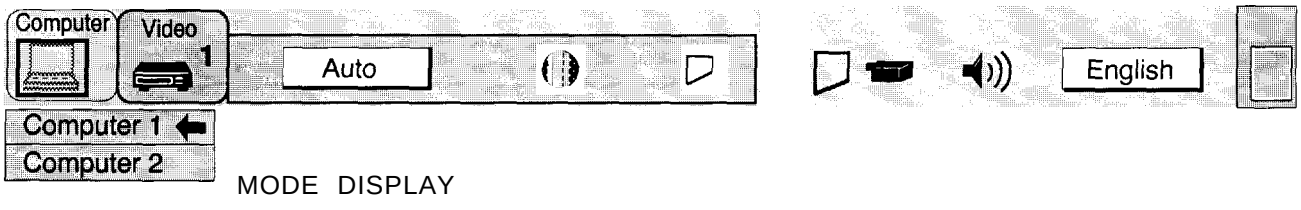

MODE DISPLAY

MAIN MENU DISPLAY

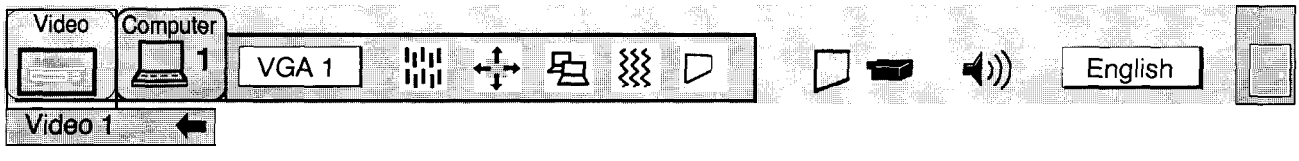

MODE DISPLAY

SOUND ADJUSTMENT

You can adjust the sound volume and sound mute used in the MENU.

1. Press the MENU BUTTON and the MAIN MENU DISPLAY dialog box will appear.
2. Press the POINT LEFT/RIGHT BUTTON(s) to select SOUND and press the SELECT (REAR CLICK) BUTTON. Another dialog box SOUND ADJUST DISPLAY will appear.
3. Press the POINT DOWN BUTTON and a red arrow will appear.
4. Move the arrow to an item that you want to adjust by pressing the POINT UP/DOWN BUTTON(s).
5. To increase the sound volume, point the arrow to △ and then press the SELECT (REAR CLICK) BUTTON. To decrease the sound volume, point the arrow to ▽ and then press the SELECT (REAR CLICK) BUTTON.
6. To mute the sound, point the arrow to Mute and then press the SELECT (REAR CLICK) BUTTON. The mute display is changed On from Off and mute the sound.
7. To quit the MENU, point to Quit and then press the SELECT (REAR CLICK) BUTTON.

MAIN MENU DISPLAY

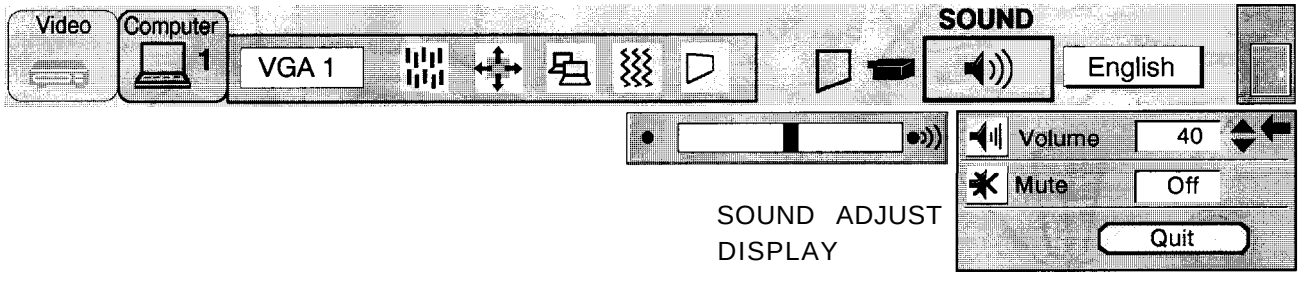

SOUND ADJUST DISPLAY

LANGUAGE ADJUSTMENT

A language used in the MENU is selectable from among English, German, French, Italian, Spanish and Japanese.

1. Press the MENU BUTTON and the MAIN MENU DISPLAY dialog box will appear.
2. Press the POINT LEFT/RIGHT BUTTON(s) to select LANGUAGE and press the SELECT (REAR CLICK) BUTTON. Another dialog box LANGUAGE SETTING DISPLAY will appear.
3. Press the POINT DOWN BUTTON and a red arrow will appear.
4. Move the arrow to the language you want to use by pressing the POINT UP/DOWN BUTTON(s) and then press the SELECT (REAR CLICK) BUTTON.
5. The setting is permanently held even if the MAIN ON/OFF is switched off.

MAIN MENU DISPLAY

LANGUAGE SETTING DISPLAY

MENU EXIT

When in MENU mode, press the POINT RIGHT BUTTON and select right end ICON, then press the SELECT (REAR CLICK) BUTTON. Menu will be closed.

NOTE: Pressing the MENU BUTTON while in MENU mode. Menu will be closed.

MAIN MENU DISPLAY

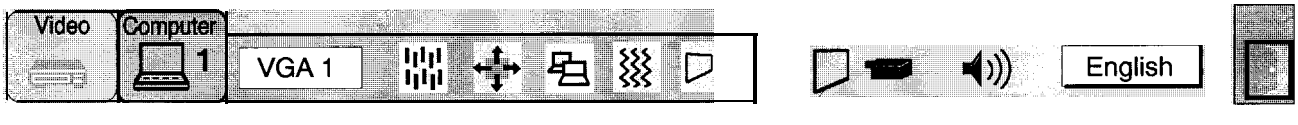

MENU EXIT **ICON**

COLOUR SYSTEM SELECT (VIDEO MODE)

This projector is compatible with the four major broadcast video standards: PAL, SECAM, NTSC or NTSC 4.43 (COLOUR SYSTEMs). It automatically adjusts itself to optimize its performance for the incoming video. However, if the video signal is not strong enough to detect the video format, the projector may not reproduce the proper video image. In case this happens, this projector allows you to choose a specific broadcast signal format.

1. Connect the video equipment and the PROJECTOR, and turn them on.
2. Set MODE SELECT to “VIDEO MODE”.
3. Press the MENU BUTTON and the MAIN MENU DISPLAY dialog box will appear.
4. Press the POINT LEFT/RIGHT BUTTON(s) to select SYSTEM and press the SELECT (REAR CLICK) BUTTON. Another dialog box COLOUR SYSTEM DISPLAY will appear. The current COLOUR SYSTEM is displayed in the system window.
5. Press the POINT DOWN BUTTON and a red arrow will appear.
6. To change the current COLOUR SYSTEM, press the POINT UP/DOWN BUTTON(s) to move the arrow to a desirable system and then press the SELECT (REAR CLICK) BUTTON.
7. The setting changed remains effective until the MAIN ON/OFF switch is turned off.

MAIN MENU DISPLAY

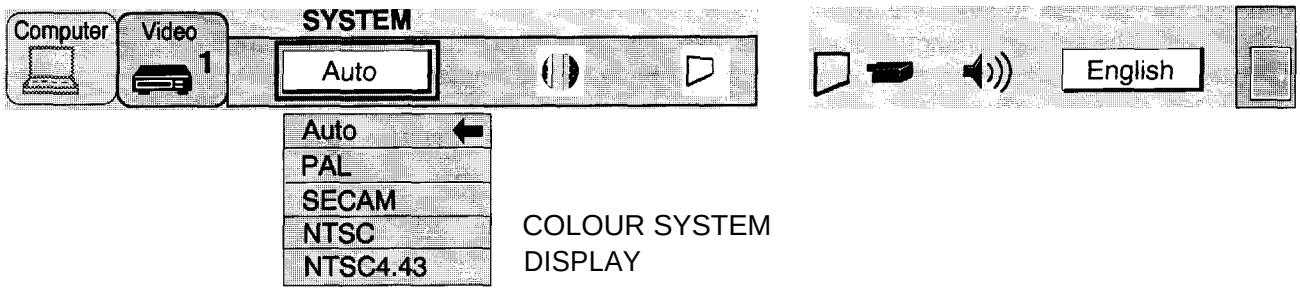

COLOUR SYSTEM DISPLAY

SIMPLE METHOD

1. Press the SYSTEM BUTTON. COLOUR SYSTEM DISPLAY dialog box will appear.
2. Press the POINT DOWN BUTTON and a red arrow will appear.
3. To change the current COLOUR SYSTEM, press the POINT UP/DOWN BUTTON(s) to move the arrow to a desirable system and then press the SELECT (REAR CLICK) BUTTON.

PICTURE IMAGE ADJUSTMENT (VIDEO MODE)

Although picture adjustments have been preset at the factory to our standards, you may want to change the setting.

1. Press the MENU BUTTON and the MAIN MENU DISPLAY dialog box will appear.
2. Press the POINT LEFT/RIGHT BUTTON(s) to select IMAGE and press the SELECT (REAR CLICK) BUTTON. Another dialog box IMAGE ADJUST DISPLAY will appear. This shows the current picture settings.
3. In this dialog box, you can adjust the settings by increasing or decreasing the levels shown as numbers. The items and the range of the levels that you can adjust are summarized in the table as below.
4. Press the POINT DOWN BUTTON and a red arrow will appear.
5. Move the arrow to an item that you want to adjust by pressing the POINT UP/DOWN BUTTON(s).
6. To increase the level, point the arrow to △ and then press the SELECT (REAR CLICK) BUTTON. To decrease the level, point the arrow to ▽ and then press the SELECT (REAR CLICK) BUTTON.
7. You may want to store the settings in the memory so that you can recall them later. To store the settings, move the arrow to Stored and then press the SELECT (REAR CLICK) BUTTON. When you have stored the settings, "OK ?" is displayed for confirmation.
8. Move the arrow to Yes and then press the SELECT (REAR CLICK) BUTTON. The stored settings are permanently held even if the MAIN ON/OFF is switched off.
9. To quit the MENU, move the arrow to Quit and then press the SELECT (REAR CLICK) BUTTON.
10. If you do not want to store the settings, move the arrow to Quit and then press the SELECT (REAR CLICK) BUTTON. The settings changed remains effective until the MAIN ON/OFF switch is turned off.
11. To recall the settings from the memory that you have stored, move the arrow to Reset and then press the SELECT (REAR CLICK) BUTTON. When you have reset the settings, "OK ?" is displayed for confirmation. Move the arrow to Yes and then press the SELECT (REAR CLICK) BUTTON. You can adjust the settings again if needed.

NOTE: "TINT" will be skipped during in the PAL and SECAM mode.

MAIN MENU DISPLAY

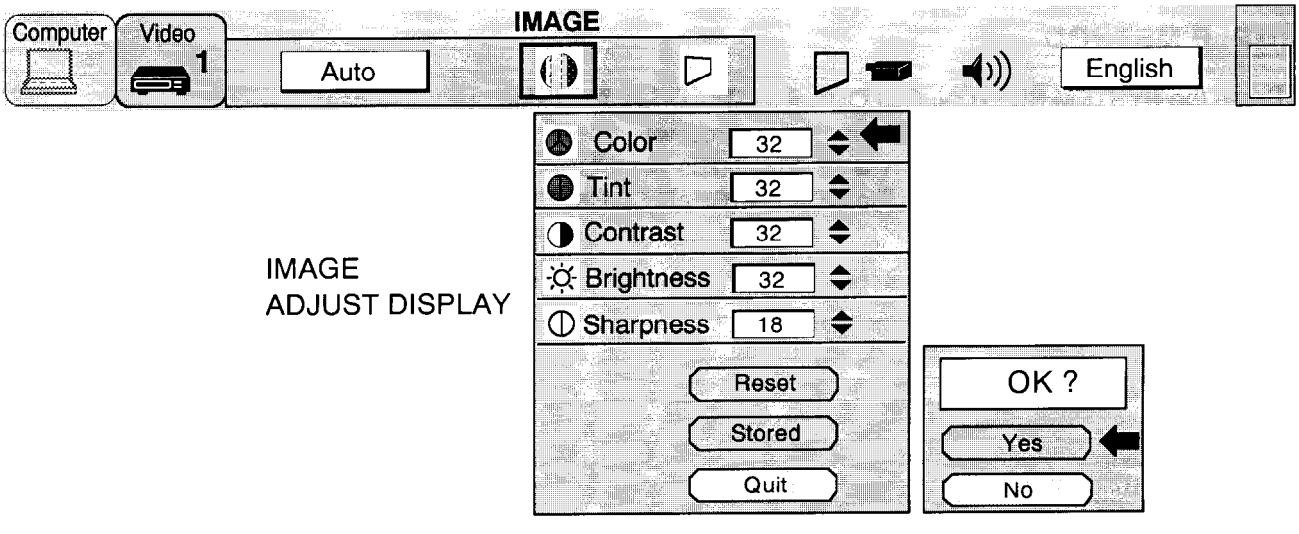

IMAGE
ADJUST DISPLAY

TABLE OF PICTURE IMAGE ADJUSTMENT

COLOUR	DECREASES	0 ◄► 63	INCREASES
TINT	MORE PURPLE	0 ◄► 63	MORE GREEN
CONTRAST	LIGHTER	0 ◄► 63	DEEPER
BRIGHTNESS	DARKER	0 ◄► 63	BRIGHTER
SHARPNESS	SOFTER	0 ◄► 31	SHARPER

PICTURE SCREEN ADJUSTMENT (VIDEO MODE)

This projector has a Wide function, which enables you to view a wider video image.

WIDE function

This projector is able to project not only a normal video image (with 4 x 3 aspect ratio). But also a wider video image by compressing 4 x 3 image. This feature may be used by those who want to enjoy watching a movie with a cinema-like image. You can switch either to WIDE or to REGULAR screen mode.

1. Press the MENU BUTTON and the MAIN MENU DISPLAY dialog box will appear.
2. Press the POINT LEFT/RIGHT BUTTON(s) to select SCREEN and press the SELECT (REAR CLICK) BUTTON. Another dialog box SCREEN ADJUST DISPLAY will appear.
3. Press the POINT DOWN BUTTON and a red arrow will appear.
4. To switch to “Wide” mode, move the arrow to Wide by pressing the POINT UP/DOWN BUTTON(s) and then press the SELECT (REAR CLICK) BUTTON.
5. To switch to “Regular” mode, move the arrow to Regular by pressing the POINT UP/DOWN BUTTON(s) and then press the SELECT (REAR CLICK) BUTTON.
6. The “Wide” settings remains effective until the MAIN ON/OFF switch is turned off.

MAIN MENU DISPLAY

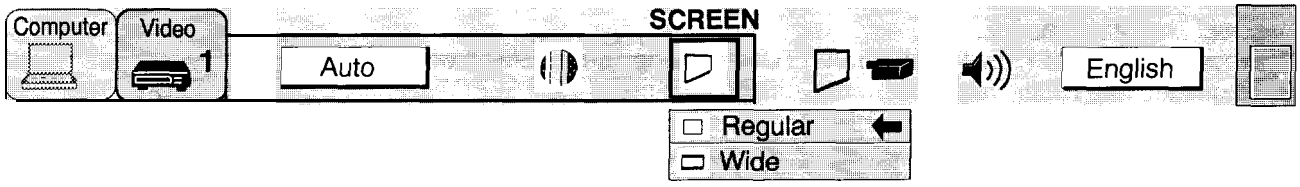

SCREEN ADJUST DISPLAY

COMPUTER SYSTEM SELECT (COMPUTER MODE)

This projector is adjustable to different types of computer display signals based on VGA, SVGA, XGA or SXGA (See "COMPATIBLE COMPUTER SPECIFICATIONS' on the next page). If you set MODE SELECT to "COMPUTER", the projector will automatically process the incoming signal and project the proper image without any special setting. Although this will work in most cases, you may be required to manually set the projector for some computer signals. If the computer image is not reproduced properly, try the following procedure and switch to the computer display mode that you want to use.

1. Connect the COMPUTER and the PROJECTOR, and turn them on.
2. Set MODE SELECT to "COMPUTER MODE (1 or 2) ". This shows the current display mode initially detected by the projector in the system window. And "Current mode" display appears.

NOTE: 1. If the projector cannot discriminate or detect the input signal from the computer, the "Go PC adj." display appears.

NOTE: 2. If no input signal from the computer, the "No signal" display appears on the screen.

3. Press the MENU BUTTON and the MAIN MENU DISPLAY dialog box will appear.
4. Press the POINT LEFT/RIGHT BUTTON(s) to select SYSTEM and press the SELECT (REAR CLICK) BUTTON. Another dialog box COMPUTER SYSTEM DISPLAY will appear.
5. Press the POINT DOWN BUTTON and a red arrow will appear.
6. If you want to change the current display mode, move the arrow by pressing the POINT UP/DOWN BUTTON(s) to select one of the modes.
7. Press the SELECT (REAR CLICK) BUTTON to change the display mode.
8. To quit the MENU, move the arrow to Quit and then press the SELECT (REAR CLICK) BUTTON.

MAIN MENU DISPLAY

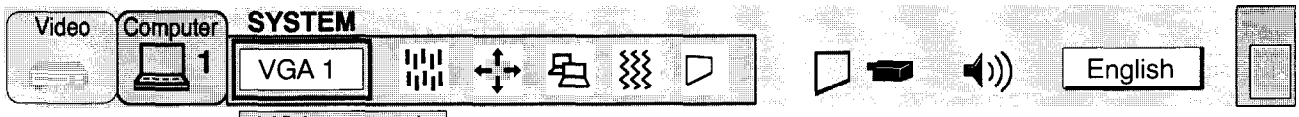

COMPUTER SYSTEM DISPLAY

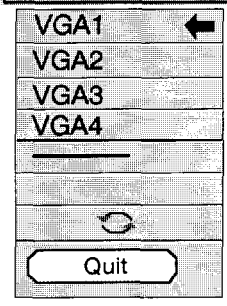

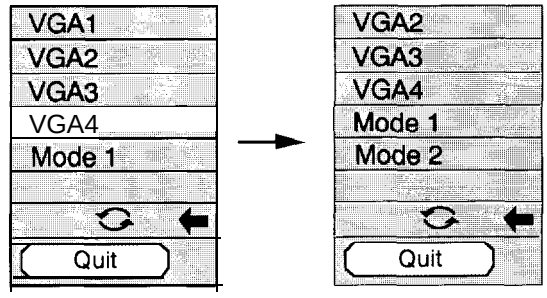

CURRENT MODE DISPLAY

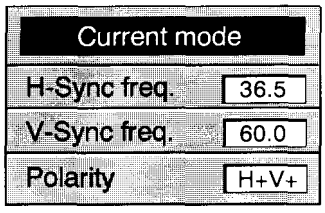

When the mark ( ) is displayed as BLACK, computer system mode will be available on the next page. Move an arrow to the mark ( ) and press the SELECT (REAR CLICK) BUTTON to show computer system mode described on the next page.

SIMPLE METHOD

1. Press the SYSTEM BUTTON. COMPUTER SYSTEM DISPLAY dialog box will appear.
2. Press the POINT DOWN BUTTON and a red arrow will appear.
3. If you want to change the current display mode, move the arrow by pressing the POINT UP/DOWN BUTTON(s) to select one of the modes.
4. Press the SELECT (REAR CLICK) BUTTON to change the display mode.
5. To quit the MENU, move the arrow to Quit and then press the SELECT (REAR CLICK) BUTTON.

PC ADJUSTMENT

This is a special function that may be used when a computer image is not reproduced properly. (See the pages 38 ~ 41 for more detail.)

COMPATIBLE COMPUTER SPECIFICATIONS

ON-SCREEN DISPLAY	RESOLUTION	H-Freq. (kHz)	V-Freq. (Hz)
VGA1	640 x 480	31.47	59.88
VGA2	720 × 400	31.47	70.09
VGA3	640 × 400	31.47	70.09
VGA4	640 × 480	37.86	74.38
VGA5	640 × 480	37.86	72.81
VGA6	640 × 480	37.50	75.00
MAC LC13	640 × 480	34.97	66.60
MAC 13	640 X 480	35.00	66.67
PC98	640 × 400	24.83	56.42
FM TOWNS	640 X 400	24.38	55.40
SVGA1	800 × 600	35.156	56.25
SVGA2	800× 600	37.88	60.32
SVGA3	800 × 600	46.875	75.00
SVGA4	800 × 600	53.674	85.06
SVGA5	800 × 600	48.08	72.19
SVGA6	800 × 600	37.90	61.03
SVGA7	800 × 600	34.50	55.38
SVGA8	800 × 600	38.00	60.51
SVGA9	800 × 600	38.60	60.31
SVGAI 0	800 × 600	47.90	71.92
SVGAI 1	800 × 600	32.70	51.09
SVGAI2	800 X 600	38.00	60.51
MAC 16	832 × 624	49.72	74.55
XGAI	1024 X 768	48.36	60.00
XGA2	1024 X 768	68.677	84.997
XGA3	IO24 X 768	60.023	75.03
XGA4	1024 x 768	56.47	70.07
XGA5	1024 × 768	60.31	74.92
XGA6	1024 X 768	48.50	60.02
XGA7	IO24 × 768	44.00	54.58
XGA8	1024 x 768	63.48	79.35

ON-SCREEN DISPLAY	RESOLUTION	H-Freq. (kHz)	V-Freq. (Hz)
XGA9	1024 × 768	36.00	87.17 (Interlace)
XGA10	1024 X 768	62.04	77.07
XGA11	1024 x 768	61.00	75.70
XGA12	1024 × 768	35.522	86.96 (Interlace]
XGA13	1024 × 768	46.90	58.20
XGA14	1024 X 768	47.00	58.30
MAC19	1024 x 768	60.24	75.08
SXGAI	1152 × 864	64.20	70.40
SXGA2	1280 X 1024	62.50	58.60
SXGA3	1280 × 1024	63.90	60.00
SXGA4	1280 x 1024	63.34	59.98
SXGA5	1280 × 1024	63.74	60.01
SXGA6	1280 × 1024	71.69	67.19
SXGA7	1280 × 1024	81.13	76.107
SXGA8	1280 × 1024	63.98	60.02
SXGA9	1280 × 1024	79.976	75.025
SXGA10	1280 x 960	60.00	60.00
SXGAI 1	1152x900	61.20	65.20
SXGA12	1152x 900	71.40	75.60
SXGA13	1280 × 1024	50.00	86.00 (Interlace:
SXGA14	1280 × 1024	50.00	94.00 (Interlace
SXGAI 5	I280 X 1024	63.37	60.01
SXGAI 6	1280 × 1024	76.97	72.00
SXGA17	1152x900	61.85	66.00
SXGA18	1280 X 1024	46.43	86.70 (Interlace)
SXGA19	1280 X 1024	63.79	60.18
MAC21	1152 × 870	68.68	75.06
MAC	1280 X 960	75.00	75.08
MAC	1280 x 1024	80.00	75.08

Specifications are subject to change without notice.

NOTE: Basically this projector can accept the signal from all computers with the above mentioned V, H-Frequency and less than 135 MHz of Dot Clock.

PICTURE IMAGE ADJUSTMENT (COMPUTER MODE]

Although picture adjustments have been preset at the factory to our standards, you may want to change the setting.

1. Press the MENU BUTTON and the MAIN MENU DISPLAY dialog box will appear.
2. Press the POINT LEFT/RIGHT BUTTON(s) to select IMAGE and press the SELECT (REAR CLICK) BUTTON. Another dialog box IMAGE ADJUST DISPLAY will appear. This shows the current picture settings.
3. In this dialog box, you can adjust the settings by increasing or decreasing the levels shown as numbers. The items and the range of the levels that you can adjust are summarized in the table as below.
4. Press the POINT DOWN BUTTON and a red arrow will appear.
5. Move the arrow to an item that you want to adjust by pressing the POINT UP/DOWN BUTTON(s).
6. To increase the level, point the arrow to △ and then press the SELECT (REAR CLICK) BUTTON. To decrease the level, point the arrow to ▽ and then press the SELECT (REAR CLICK) BUTTON.
7. You may want to store the settings in the memory so that you can recall them later. To store the settings, move the arrow to Stored and then press the SELECT (REAR CLICK) BUTTON. When you have stored the settings, "OK ?" is displayed for confirmation.
8. Move the arrow to Yes and then press the SELECT (REAR CLICK) BUTTON. The stored settings are permanently held even if the MAIN ON/OFF is switched off.
9. To quit the MENU, move the arrow to Quit and then press the SELECT (REAR CLICK) BUTTON.
10. If you do not want to store the settings, move the arrow to Quit and then press the SELECT (REAR CLICK) BUTTON. The settings changed remains effective until the MAIN ON/OFF switch is turned off.
11. To recall the settings from the memory that you have stored, move the arrow to Reset and then press the SELECT (REAR CLICK) BUTTON. When you have reset the settings, "OK ?" is displayed for confirmation. Move the arrow to Yes and then press the SELECT (REAR CLICK) BUTTON. You can adjust the settings again if needed.

MAIN MENU DISPLAY

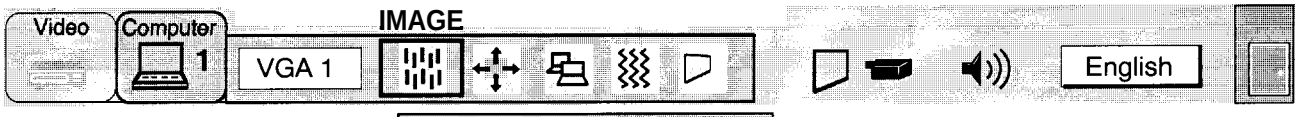

IMAGE ADJUST DISPLAY

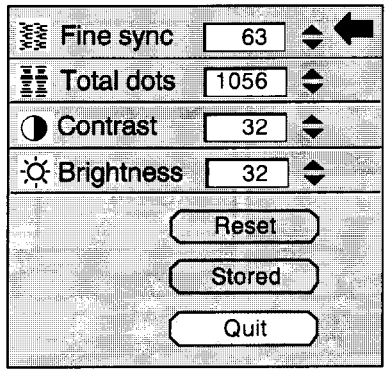

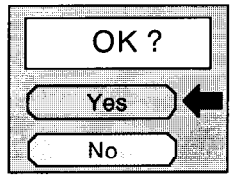

TABLE OF PICTURE IMAGE ADJUSTMENT

FINE SYNC	Adjust the picture as necessary to eliminate flicker from the display.	0 ◄► 127
TOTAL DOTS	The number of the total dots in one horizontal period. Adjust the number to match your PC image.	
CONTRAST	LIGHTER 0 ◄► 63 DEEPER	
BRIGHTNESS	DARKER 0 ◄► 63 BRIGHTER	

PICTURE POSITION ADJUSTMENT (COMPUTER MODE)

1. Press the MENU BUTTON and the MAIN MENU DISPLAY dialog box will appear.
2. Press the POINT LEFT/RIGHT BUTTON(s) to select POSITION and press the SELECT (REAR CLICK) BUTTON. Another dialog box POSITION SETTING DISPLAY will appear.
3. Press the POINT DOWN BUTTON and a red arrow will appear.
4. Move the arrow to a desirable direction (⬅,➡, ⬆ or ⬇) by pressing the POINT LEFT/RIGHT/UP/DOWN BUTTON(s) and press the SELECT (REAR CLICK) BUTTON to a desirable picture position.
5. You may want to store the settings to the memory so that you can recall them later. To store the settings, move the arrow to Stored and then press the SELECT (REAR CLICK) BUTTON. When you have stored the settings, "OK ?" is displayed for confirmation.
6. Move the arrow to Yes and then press the SELECT (REAR CLICK) BUTTON. The stored settings are permanently held even if the MAIN ON/OFF is switched off.
7. To quit the MENU, move the arrow to Quit and then press the SELECT (REAR CLICK) BUTTON.
8. If you do not want to store the settings, move the arrow to Quit and then press the SELECT (REAR CLICK) BUTTON. The settings changed remains effective until the MAIN ON/OFF switch is turned off.
9. To recall the settings from the memory that you have stored, move the arrow to Reset and then press the SELECT (REAR CLICK) BUTTON. When you have reset the settings, "OK ?" is displayed for confirmation. Move the arrow to Yes and then press the SELECT (REAR CLICK) BUTTON. You can adjust the settings again if needed.

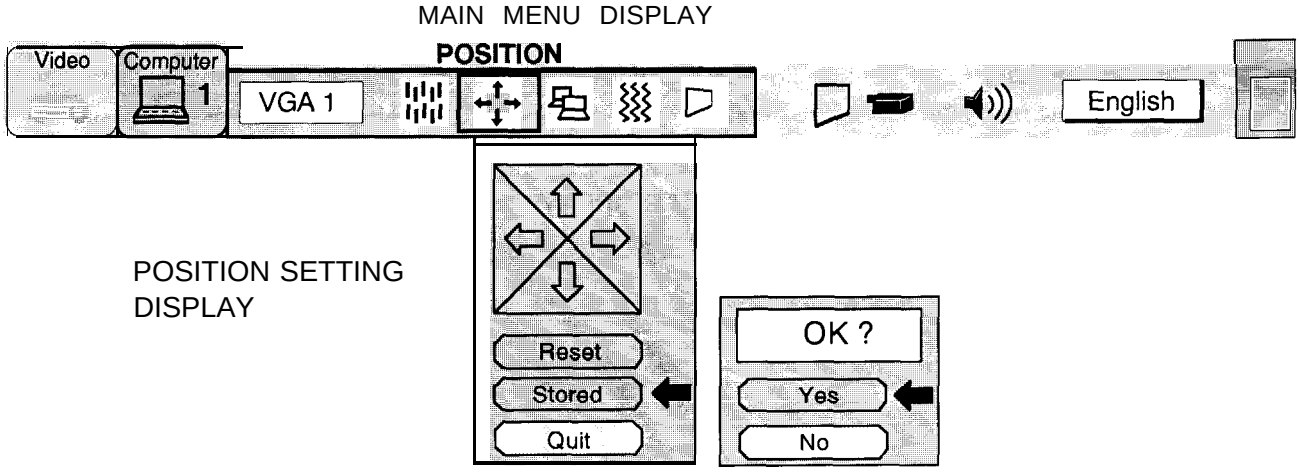

PC ADJUSTMENT

This projector can automatically detect most display signals from most personal computers currently distributed. However, some computers employ a special signal format which is different from the standard one and may not be detected by this projector. If this happens, the projector cannot reproduce a proper image. Instead the image is often recognized as a flickering picture, a non-synchronized picture, a non-centered picture or a skewed picture.

For those non-standard formats, this projector is provided with PC ADJUST, enabling you to precisely adjust several parameters to match with the input signal format. The projector has eight independent memory areas where you can store the parameter you have set. This enables you to recall the setting for a specific computer when you need it.

1. Press the MENU BUTTON and the MAIN MENU DISPLAY dialog box will appear.
2. Press the POINT LEFT/RIGHT BUTTON(s) to select PC ADJUST and press the SELECT (REAR CLICK) BUTTON. Another dialog box " Where to reserve" will appear.
3. In this dialog box, you will select one of the memory areas from among "Mode 1" to "Mode 8". If parameters have been previously set and stored in the memory, the status "Stored" will appear on the corresponding row. If not, "Free" will appear.
4. Press the POINT DOWN BUTTON and a red arrow will appear.
5. Move the arrow to one of the "Modes" (Free position) where you want to store the parameters by pressing the POINT UP/DOWN BUTTON(s). Press the SELECT (REAR CLICK) BUTTON to select it.

NOTE; If "Stored" appears in all Modes, no new PC parameter data can be stored. In this case, clear the PC parameter data using the Mode free Function.

MAIN MENU DISPLAY

PC ADJUST

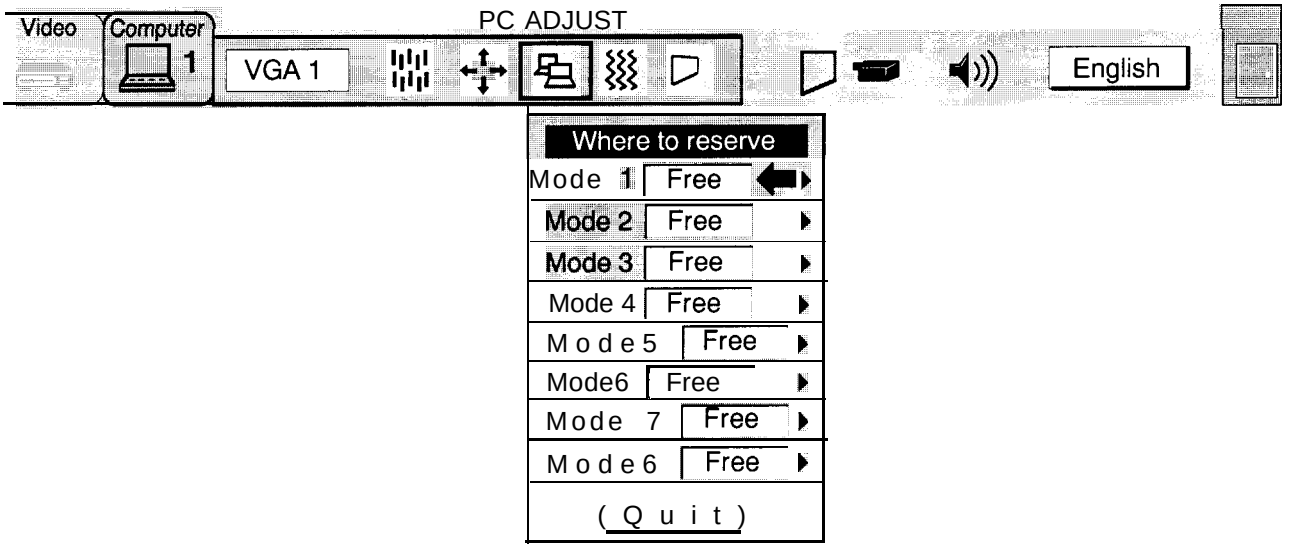

6. Another dialog box “PC ADJUSTMENT DISPLAY 1” will appear and the parameter data for the Mode you have selected is shown in this dialog box.
7. The parameters will be filled with the data determined by the projector according to the present signal input.
8. The function of the parameters and their values are summarized in the table as below.
9. Move the arrow to an item that you want to adjust by pressing the POINT UP/DOWN BUTTON(s).
10. To increase the level, point the arrow to △ and then press the SELECT (REAR CLICK) BUTTON. To decrease the level, point the arrow to ▽ and then press the SELECT (REAR CLICK) BUTTON.
11. If you want to store the settings in the memory, move the arrow to Stored and press the SELECT (REAR CLICK) BUTTON. When you have stored the settings, “OK ?” is displayed for confirmation. Move the arrow to Yes and then press the SELECT (REAR CLICK) BUTTON .
12. To recall the parameter data before setting, move the arrow to Reset and then press the SELECT (REAR CLICK) BUTTON. When you have reset the settings, “OK ?” is displayed for confirmation. Move the arrow to Yes and then press the SELECT (REAR CLICK) BUTTON . You can adjust the settings again if needed.
13. To quit the MENU, move the arrow to Quit and then press the SELECT (REAR CLICK) BUTTON.
14. If you quit the MENU without storing the settings in the memory, the parameter data you changed will not be kept.
15. The stored settings are permanently held even if the MAIN ON/OFF is switched off.
16. Adjust the data such as a “Clamp”, “Height” and “Width” if you needed, move the arrow by pressing the POINT UP/DOWN BUTTON(s) to select (▼). Press the SELECT (REAR CLICK) BUTTON.

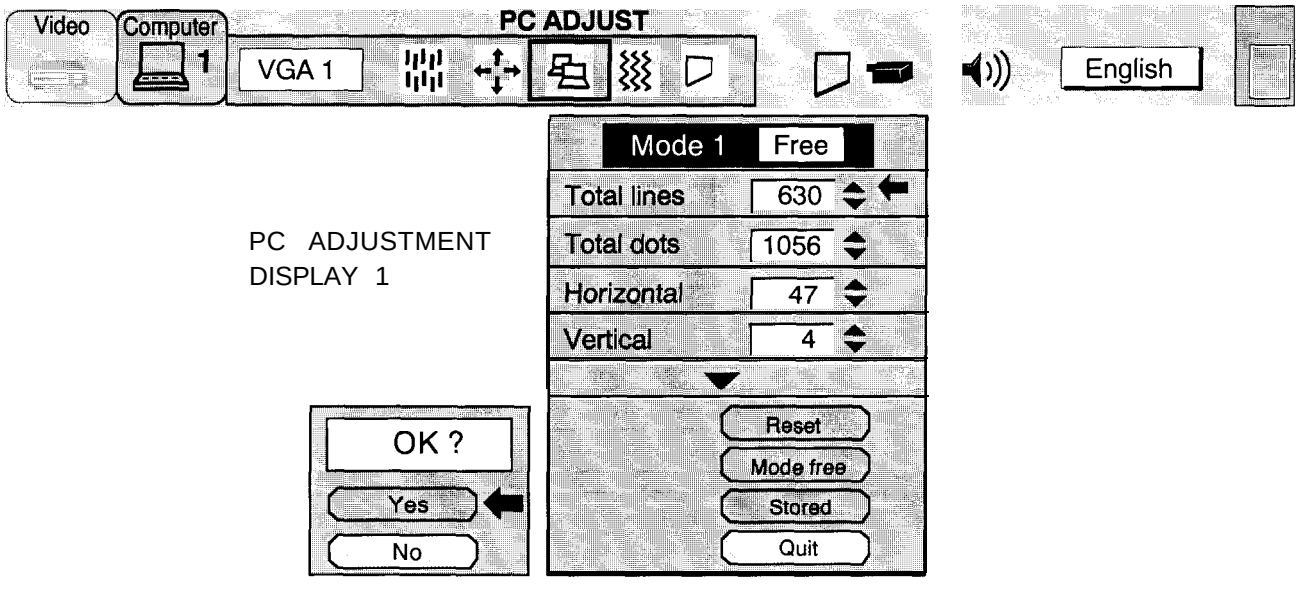

PC ADJUSTMENT DISPLAY 1

ITEM	FUNCTION
TOTAL LINES	The number of the total vertical lines. Adjust the number to match your PC image.
TOTAL DOTS	The number of the total dots in one horizontal period. Adjust the number to match your PC image.
HORIZONTAL	Adjustment of the horizontal picture position. When the image is not centered on the screen, adjust this.
VERTICAL	Adjustment of the vertical picture position. When the image is not centered on the screen, adjust this.

17. Another dialog box “PC ADJUSTMENT DISPLAY 2” will appear and the parameter data for the Mode you have selected is shown in this dialog box.
18. Move the arrow to an item that you want to adjust by pressing the POINT UP/DOWN BUTTON(s).
19. To increase the level, point the arrow to △ and then press the SELECT (REAR CLICK) BUTTON. To decrease the level, point the arrow to ▽ and then press the SELECT (REAR CLICK) BUTTON.
20. If you want to store the settings in the memory, move the arrow to Stored and press the SELECT (REAR CLICK) BUTTON. When you have stored the settings, “OK ?” is displayed for confirmation. Move the arrow to Yes and then press the SELECT (REAR CLICK) BUTTON .
21. To recall the parameter data before settings, move the arrow to Reset and then press the SELECT (REAR CLICK) BUTTON. When you have reset the settings, “OK ?” is displayed for confirmation. Move the arrow to Yes and then press the SELECT (REAR CLICK) BUTTON . You can adjust the settings again if needed.
22. To quit the MENU, move the arrow to Quit and then press the SELECT (REAR CLICK) BUTTON.
23. If you quit the MENU without storing the settings in the memory, the parameter data you changed will not be kept.
24. The stored settings are permanently held even if the MAIN ON/OFF is switched off.

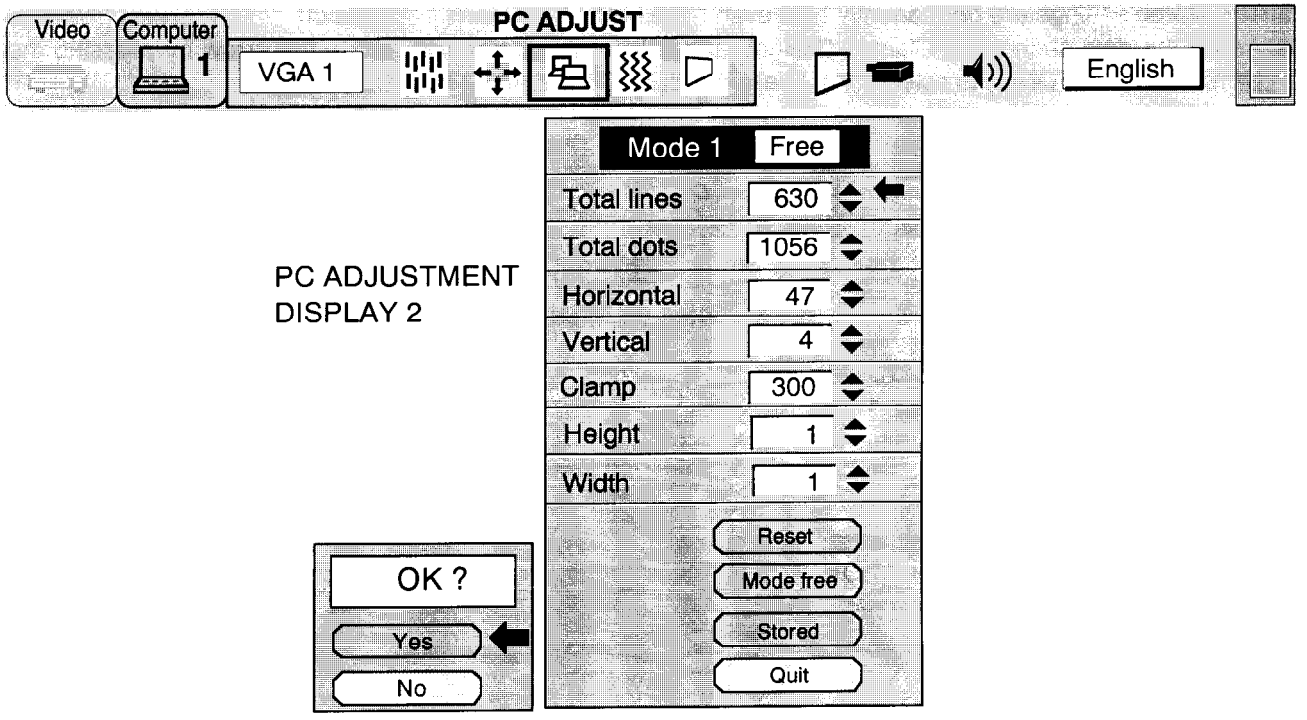

ITEM	FUNCTION
CLAMP	Adjustment of the clamp level. When the image has a dark bar, try this adjustment.
HEIGHT	Expanding or compressing level for the vertical direction.
WIDTH	Expanding or compressing level for the horizontal direction.

MODE FREE

The Mode free function is provided to confirm or clear the parameter data produced by PC ADJUST.

1. Press the MENU BUTTON and the MAIN MENU DISPLAY dialog box will appear.
2. Press the POINT LEFT/RIGHT BUTTON(s) to select PC ADJUST and press the SELECT (REAR CLICK) BUTTON. Another dialog box " Where to reserve" will appear.
3. Press the POINT DOWN BUTTON and a red arrow will appear.
4. Move the arrow to one of the "Modes" (Stored position) that you want to confirm by pressing the POINT UP/DOWN BUTTON(s). Press the SELECT (REAR CLICK) BUTTON. Another dialog box "PC ADJUSTMENT DISPLAY" will appear.
5. To quit the MENU, point to Quit and then press the SELECT (REAR CLICK) BUTTON.
6. To modify the parameter data, perform the steps 9 ~ 24 of PC ADJUSTMENT SECTION.
7. To clear the parameter data, move the arrow by pressing the POINT UP/DOWN BUTTON(s) to select Mode free. Press the SELECT (REAR CLICK) BUTTON. "OK?" is displayed for confirmation.
8. Move the arrow to Yes and then press the SELECT (REAR CLICK) BUTTON to clear the parameter data.
9. To quit the MENU, move the arrow to Quit and then press the SELECT (REAR CLICK) BUTTON.

MAIN MENU DISPLAY

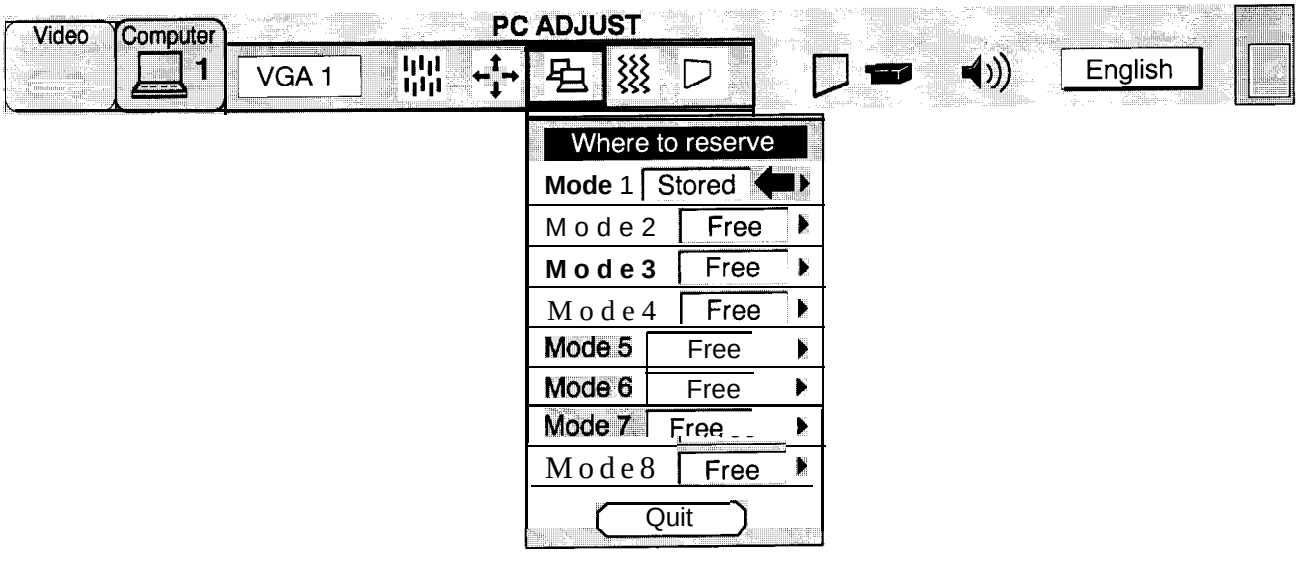

PC ADJUSTMENT DISPLAY

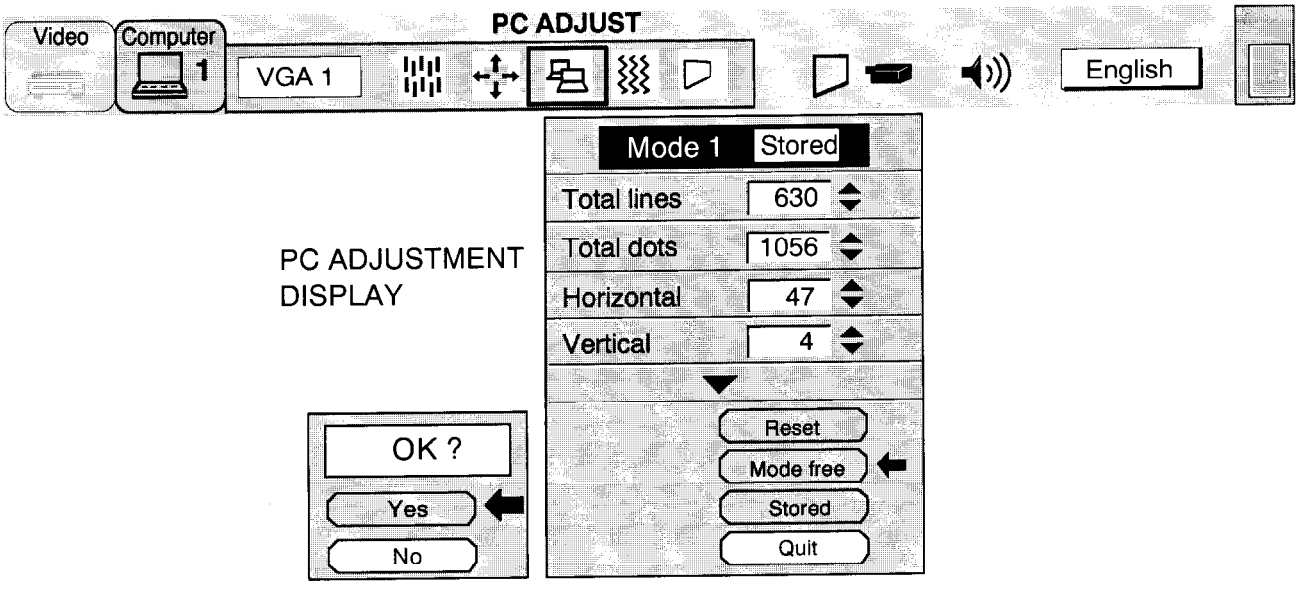

AUTO IMAGE FUNCTION (COMPUTER MODE)

The Auto image function is provided to automatically adjust Fine sync., Total dots and Screen position for most computers.

1. Press the MENU BUTTON and the MAIN MENU DISPLAY dialog box will appear.
2. Press the POINT LEFT/RIGHT BUTTON(s) to select AUTO IMAGE and press the SELECT (REAR CLICK) BUTTON. Another dialog box AUTO IMAGE SETTING DISPLAY will appear.
3. Press the POINT DOWN BUTTON and a red arrow will appear.
4. Move the arrow to an item(s) you want to adjust by pressing the POINT UP/DOWN BUTTON(s).
5. Change the setting "On", press the SELECT (REAR CLICK) BUTTON.
6. Move the arrow by pressing the POINT UP/DOWN BUTTON(s) to select Go! and then press the SELECT (REAR CLICK) BUTTON. The auto image function is started now. It will take at 10 ~ 60 seconds.
7. To quit the MENU, point to Quit and then press the SELECT (REAR CLICK) BUTTON.
8. This setting is temporarily effective until you turn off the projector or change the input signal.

NOTE: Depending upon the connected Personal Computer, the fine sync., total dots and screen position may not be fully adjusted with the "Auto Image Function". In that case, use the "Picture Image" and/or "Picture Position" adjustments (see pages 36 ~ 37) to make fine-adjust them after the "Auto Image Function" is executed.

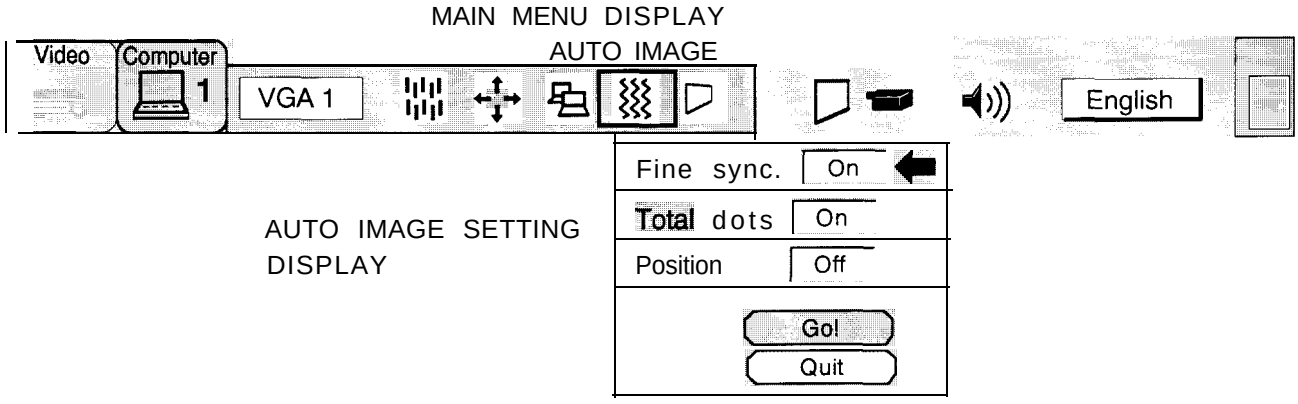

PICTURE SCREEN ADJUSTMENT (COMPUTER MODE)

This projector has a picture screen resize function, which enables you to project the image size.

Input image resolution	True Mode	Expand Mode	Compressed Mode	Panning Mode
Less than XGA (1024 x 768) image			None	None
XGA (1024 x 768) image		None	None	None
More than XGA (1024 x 768) image	None	None		

1. Press the MENU BUTTON and the MAIN MENU DISPLAY dialog box will appear.
2. Press the POINT LEFT/RIGHT BUTTON(s) to select SCREEN and press the SELECT (REAR CLICK) BUTTON. Another dialog box SCREEN ADJUST DISPLAY will appear.
3. Press the POINT DOWN BUTTON and a red arrow will appear.
4. To switch to “Expand mode”, move the arrow to Expand by pressing the POINT UP/DOWN BUTTON(s) and then press the SELECT (REAR CLICK) BUTTON. The mode is changed “Expand”.
5. To switch to “True mode”, move the arrow to True by pressing the POINT UP/DOWN BUTTON(s) and then press the SELECT (REAR CLICK) BUTTON. The mode is changed “True”.
6. To switch to “Compressed mode”, move the arrow to Compressed by pressing the POINT UP/DOWN BUTTON(s) and then press the SELECT (REAR CLICK) BUTTON. The mode is changed “Compressed”.
7. To switch to “Panning mode”, move the arrow to Panning by pressing the POINT UP/DOWN BUTTON(s) and then press the SELECT (REAR CLICK) BUTTON. The mode is changed “Panning”.

   Press the POINT UP/DOWN/LEFT/RIGHT BUTTON(s) to move the panning image position. The display of “Quit” is appearing on the screen during panning mode. If this display is disappeared, the panning mode is cancelled.

8. Press the SELECT (REAR CLICK) BUTTON to disappear the “Quit” display and panning mode is cancelled.
9. This setting is temporarily effective until you turn off the MAIN ON/OFF switch.

NOTE: The normal “Panning Operation” may not function properly if the computer system prepared with the “PC Adjust” is used.

MAIN MENU DISPLAY

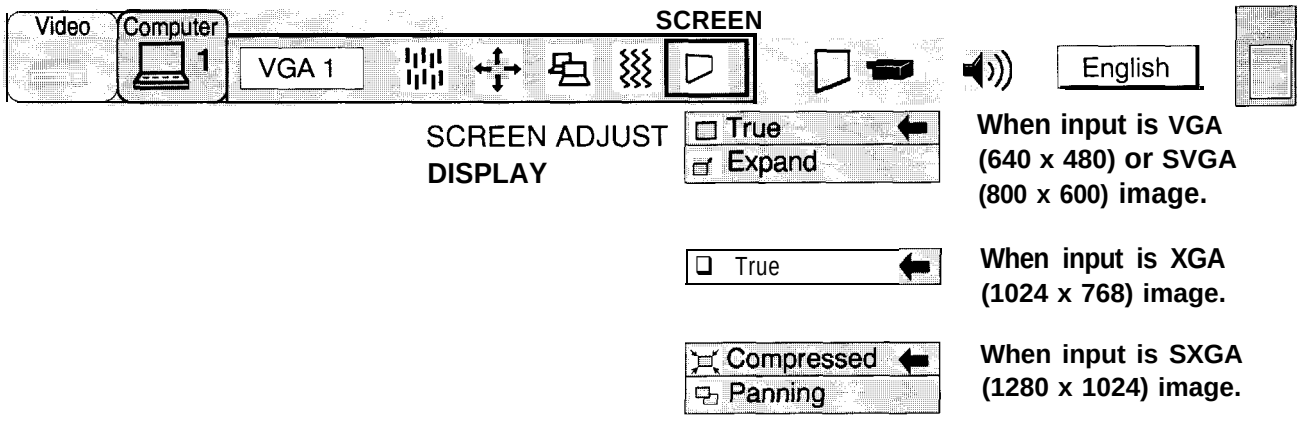

OTHER FUNCTION SETTING

This projector has other function settings; Auto retract, Blue back, Display, Ceiling, Rear and Lamp age.

AUTO RETRACT

When this function is in the “On” position, the projector retracts the lens when the projector is turned off using the LAMP POWER ON/OFF button. To protect the lens from being damaged while you are carrying the projector, you are strongly recommended to set this function “On”. Since the lens is pulled in each time the POWER is switched off, you need to make ZOOM and FOCUS adjustments when you turn on the projector.

BLUE BACK

When this function is in the “On” position, the projector will project a blue image without video noise on the screen when the video source is unplugged or turned off.

DISPLAY

When this function is in the “On” position, on-screen displays always appear when adjustments are made. Although these on-screen displays are very helpful, these may spoil the view if adjustments are made during presentations. To avoid this, you can keep back certain displays by switching this function ”Off”. The followings are the displays that you can hide.

- Wait Display
- Volume Display
- Mute Display
- Normal Display

CEILING

When this function is in the “On” position, the top/bottom and the left/right picture reverse capability lets you project from a ceiling-mounted projector.

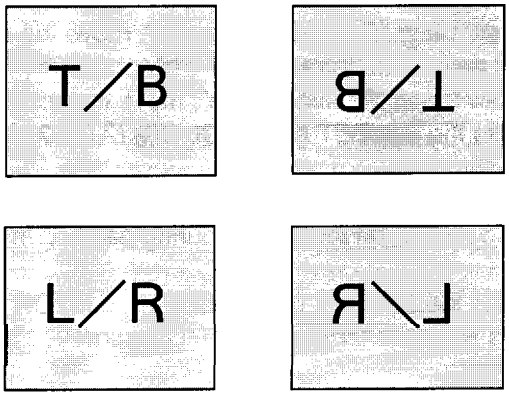

REAR

When this function is in the “On” position, the left/right picture reverse capability lets you project onto a rear projection screen.

LAMP AGE

The Lamp age function is designed to reset the lamp replacement monitor timer. When replace the lamp, reset the lamp replacement monitor timer for used this function.

AUTO RETRACT, BLUE BACK, DISPLAY, CEILING AND REAR

1. Press the MENU BUTTON and the MAIN MENU DISPLAY dialog box will appear.
2. Press the POINT LEFT/RIGHT BUTTON(s) to select SETTING and press the SELECT (REAR CLICK) BUTTON. Another dialog box SETTING DISPLAY will appear.
3. Press the POINT DOWN BUTTON and a red arrow will appear.
4. Move the arrow to an item you want to set by pressing the POINT UP/DOWN BUTTON(s).
5. If you want to change the setting (On or Off), press the SELECT (REAR CLICK) BUTTON.
6. To quit the MENU, point to Quit and then press the SELECT (REAR CLICK) BUTTON.
7. The settings are permanently kept even if the MAIN ON/OFF is switched off.

MAIN MENU DISPLAY

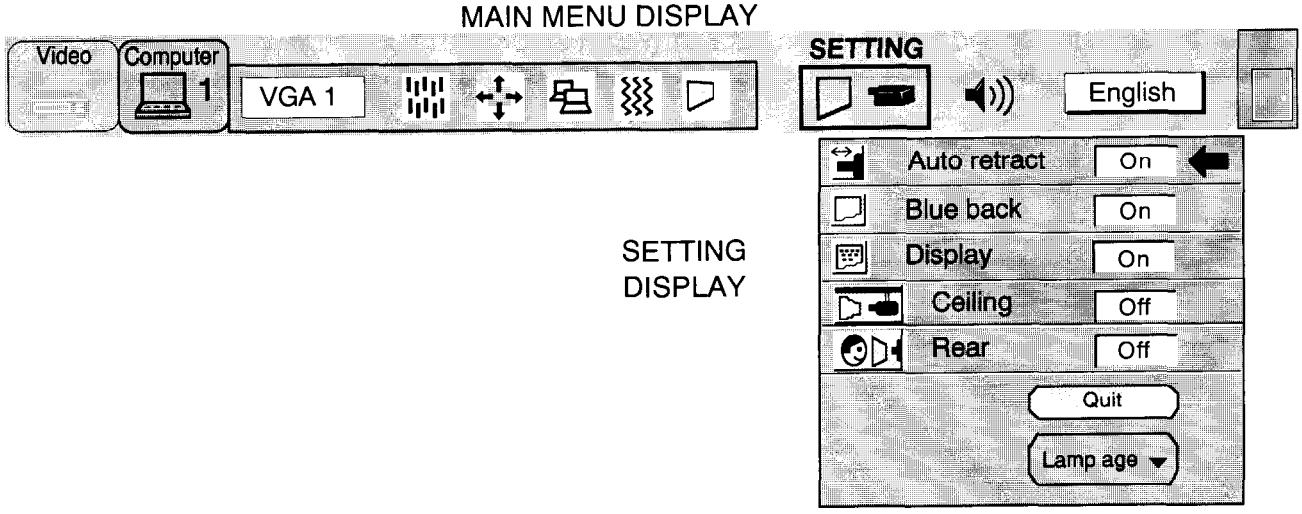

SETTING DISPLAY

LAMP AGE

NOTE: Do not reset the LAMP REPLACEMENT MONITOR TIMER, except after the lamp replacement,

1. Press the MENU BUTTON and the MAIN MENU DISPLAY dialog box will appear.
2. Press the POINT LEFT/RIGHT BUTTON(s) to select SETTING and press the SELECT (REAR CLICK) BUTTON. Another dialog box SETTING DISPLAY will appear.
3. Press the POINT DOWN BUTTON and a red arrow will appear.
4. Move the arrow by pressing the POINT UP/DOWN BUTTON(s) to select Lamp age and then press the SELECT (REAR CLICK) BUTTON. When you reset the lamp replace monitor, “lamp replace monitor reset?” is displayed for confirmation.
5. Move the arrow to Yes and then press the SELECT (REAR CLICK) BUTTON, “OK?” is displayed for confirmation. Move the arrow to Yes and then press the SELECT (REAR CLICK) BUTTON, the lamp replace monitor is reset.
6. Move the arrow to No and then press the SELECT (REAR CLICK) BUTTON. The lamp replace monitor is not reset.
7. To quit the MENU, move the arrow to Quit and then press the SELECT (REAR CLICK) BUTTON.

MAIN MENU DISPLAY

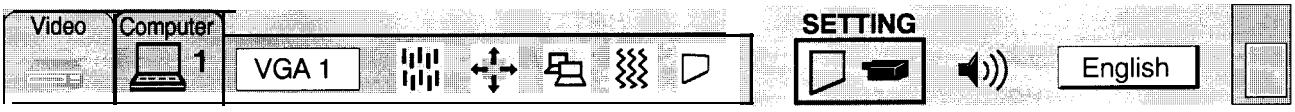

SETTING DISPLAY

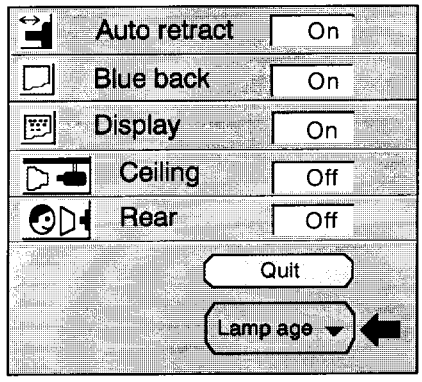

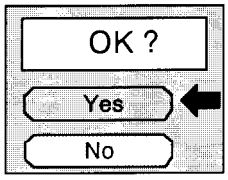

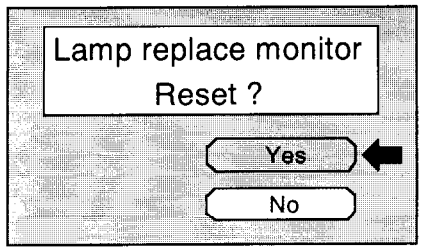

AIR FILTER CARE AND CLEANING

The removable air filter prevents dust from accumulating on the surface of the projection lens and projection mirror. Should the air filter become clogged with dust particles, it will reduce the cooling fan's effectiveness and may result in internal heat build up and reduce the life of the projector.

To clean the air filter, follow the cleaning procedures below:

1. Turn the LAMP POWER ON/OFF button OFF.
2. Remove the air filter cover.
   Carefully place a coin against the indented part of the filter cover and lift.
3. Remove the air filter from the filter cover.
4. Clean the air filter with a vacuum cleaner.
5. Replace the air filter. Make sure that air filter cover is fully inserted.

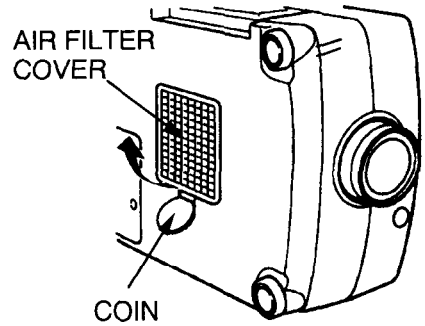

A Do not clean with water. Doing so may damage the air filter.
Do not operate the projector with air filter removed.

RECOMMENDATION

TO ENJOY PICTURE IMAGE, USE THE PROJECTOR IN THE CLEAN ENVIRONMENT. USAGE IN THE CLEAN ENVIRONMENT IS RECOMMENDED.

When used under the dusty or smoky conditions, dust may accumulate on the liquid crystal panel and lens inside it, and may resultantly be projected on the screen together with the picture.

When the above symptoms are noticed contact the place where your authorized dealer or service station for the cleaning.

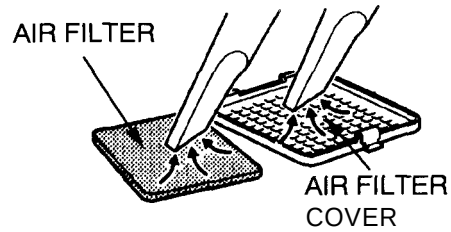

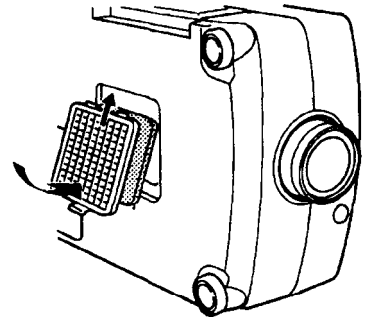

TEMPERATURE WARNING INDICATOR

The TEMPERATURE WARNING INDICATOR flashes red when the internal temperature of the projector exceeds the normal temperature.
Possible causes for the temperature warning may be:

1. Ventilation slots of the projector are blocked. In such an event, reposition the projector so that ventilation slots are not obstructed.

2. Air filter is clogged with dust particles. Remove dust from the air filter by following instructions in the Air Filter Care and Cleaning section above.

3. If temperature warning indicator remains on after performing the checks listed above, cooling fan/internal circuits may be malfunctioning. Request service from an authorized dealer or service station.

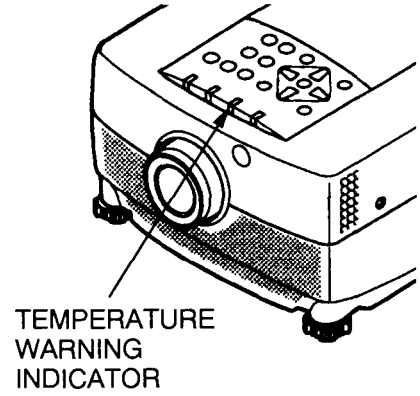

LAMP REPLACEMENT

If the lamp fails to come on and the lamp monitor on the projector light is orange, you must replace the bulb.

A

- **For continued safety, replace with a lamp assembly of the same type.**
- **Allow the projector to cool for at least 45 minutes before you open the lamp cover. The inside of the projector can become very hot.**
- **Do not drop the lamp module or touch the glass bulb ! The glass can shatter and cause injury.**

Follow these steps to replace the lamp assembly.

1. Turn off the projector and allow the projector to cool thoroughly.
2. Disconnect the AC cord from the projector.
3. Remove screw with a screwdriver and disconnect the lamp cover.
4. Remove 2 screws with a screwdriver and pull out the lamp assembly by grasping the handle.
5. Replace the lamp assembly.
6. Tighten 3 screws to secure the lamp cover to the lamp assembly.
7. Connect the detachable AC cord to the projector.

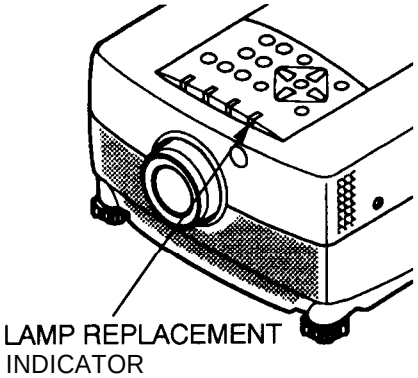

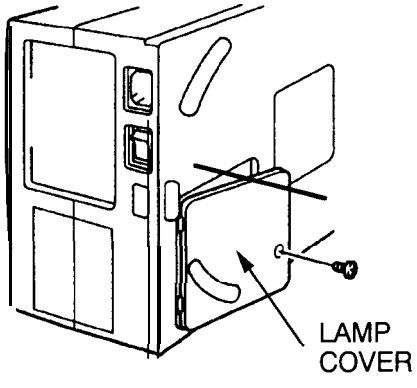

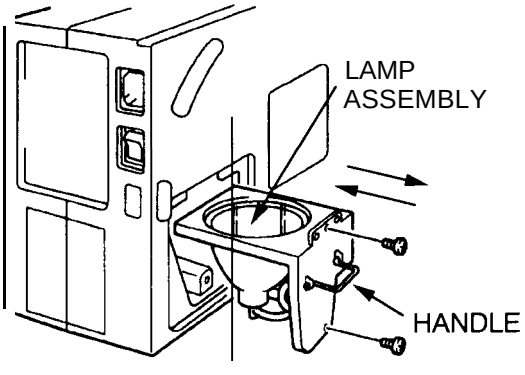

8. Reset the lamp replacement monitor timer. (See “LAMP AGE” section on page 46.)

NOTE: Do not reset the LAMP REPLACEMENT MONITOR TIMER, except after the lamp replacement.

CLEANING THE LENS

Follow these steps to clean the projection lens:

1. Apply a non-abrasive camera lens cleaner to a soft, dry cleaning cloth.
   Avoid using an excessive amount of cleaner.
   Abrasive cleaners, solvents or other harsh chemicals might scratch the lens.
2. Lightly wipe the cleaning cloth over the lens.
3. If you don't intend to use the projector immediately, replace the lens cover.

TROUBLESHOOTING

Before calling your dealer or service station for assistance, follow these steps, in this order, to make sure everything is properly connected.

1. Make sure you have connected the projector to your equipment as described in section " CONNECTING THE PROJECTOR" on pages 10 ~ 17.
2. Check cable connections. Verify that all computer, video and power cord are properly connected.
3. Verify that all power is switched on.
4. If the projector still does not display an image, restart the computer.
5. If the image still does not display, unplug the projector from the computer and check the computer monitor's display. The problem may be with your graphics controller rather than with the projector. (When you reconnect the projector, remember to turn the computer and monitor off before you power up the projector. Power the equipment back up in this order: Projector, monitor, computer)
6. If the problem still exists, check the following chart.

Problem:	Try these Solutions:
No power	● Plug the projector into an AC outlet. ● Turn the MAINS ON/OFF button to ON. ● Press the LAMP POWER ON/OFF switch to ON. ● Be sure the READY INDICATOR light is ON. ● Wait one minute after the projector is turned OFF before turning the projector back on. NOTE: After pressing the LAMP POWER ON/OFF button to OFF. The projector functions as follows. 1. The LAMP POWER indicator will light and the READY indicator will turn off. 2. After one minute, the READY indicator will light green again and the projector may be turned on by pressing the LAMP POWER ON/OFF button. ● Check temperature warning indicator. If the indicator flashes red, the projector cannot be turned on. (See "USING THE PROJECTOR" section on page 27). ● Check the projection lamp.
Image is out of focus	● Adjust the focus. ● Make sure the projection screen is at least 1.1m from the projector. ● Check the projection lens to see if it needs cleaning. NOTE: Moving the projector from a cool temperature location to a warm temperature location may result in moisture condensation on the lens. In such an event, leave the projector OFF and wait until condensation disappears.

Problem:	Try these Solutions:
The lens Is pulled In when the POWER Is switched off.	Check AUTO RETRACT function. **(See** "OTHER FUNCTION SETTING" section on pages 44~45).
Picture Is L/R Reversed.	Check Ceiling/Rear feature. (See "OTHER FUNCTION SETTING" section on pages 44~45).
Picture Is T/B inverted.	Check Ceiling feature. (See "OTHER FUNCTION SETTING" section on pages 44 ~ 45).
Some displays are not seen during the operation.	Check Display feature. (See "OTHER FUNCTION SETTING" section on pages 44~45).
No sound.	• Check audio cable connection from audio input source. • Adjust audio source. • Press the VOLUME (+) button. • Press the MUTE button.
Remote control unit doesn't work.	• Check the batteries. • Make sure nothing is blocking between the remote control sensor and remote control unit. • Make sure you are not too far from the projector when using the remote control unit. Maximum operate range (5 m).
Wireless mouse function does not work.	• Check the cable connection between the projector and the computer. • Check the mouse setting on your computer. • Turn on the projector before you turn on the computer.

TECHNICAL SPECIFICATIONS

SPECIFICATIONS

Projector Type	Multi-media Projector
Dimensions (W x H x D)	260 mm x 159 mm x 391 mm
Net Weight	5.9 kg
LCD Panel System	1.3" TFT Active Matrix type (Thin Film Transistor) x 3
Number of Pixels:	2,359,296 (786,432 (1,024 × 768) × 3}
Colour System	4 colour system (PAL, SECAM, NTSC and NTSC4.43)
Scanning Frequency	H-sync. 15 ~ 80 KHz, V-sync. 50 ~ 100 Hz
Projection Image Size (Diagonal)	Adjustable from 20" to 400"
Contrast Ratio	100 :1 (ANSI)
Horizontal Resolution	800 TV lines
Projection Lens	F2.5 ~ 3.5 lens with f47.6mm ~ 76.2mm Motor zoom and focus
Throw Distance	1.1 m ~ 14.3 m
Projection Lamp	Metal Halide, 120 watt type
Projection Mirror	Dichroic mirror and X-prism system
AV Input jacks	PHONO Type x 1 (Video, Audio R and L) and DIN 4 pin (S-Video) x 1
Computer Input Jack	(VGA) HDB15 Terminal × 2, Multi-pole 12 pin (Control port) x 2
Monltor Output Jack	(VGA) HDB15 Terminal x 1
Computer Audio Input Jack	Mini Stereo Type × 2
Video Monitor Output Jack	PHONO Type x 1
Audio Monitor Output Jacks	PHONO Type x 1 (R and L)
Other Jacks	EXT. Speaker Jack x 1
Built-In Speaker	INT. SP. Stereo (R and L), 2 watt RMS (T.H.D. 10%)
Image Elevation Adjustment	Up to 6"
Voltage	200 ~ 240V AC, 50/60 Hz
Power Consumption	1.2A (Max. Ampere)
Operating Temperature	5°C ~ 35°C
Storage Temperature	– 10°C ~ 60°C
Remote Control Battery	(2) AA, UM3 or RM06 Type

Printed in Japan
Part No. 610 272 7586 (1AA6P1P1476--P6KAA)

SANYO Electric Co., Ltd