myprojectorlamps.com

The most trusted, dependable name in projector lamp sales.

http://www.myprojectorlamps.com

http://www.myprojectorlamps.ca

http://www.myprojectorlamps.eu

The following projector manual has not been modified or altered in any way.

INSTALLATION/OPERATION MANUAL

VIDEO XTREME

VX-44d
VX-55d

THX

1080p Digital Light Processing™ Projector and Digital High Definition (DHD™) Controller/Scaler/Processor

RUNCO

RuncoCare™ Standard Two Year Limited Warranty

Congratulations on your purchase of a Runco® product! With proper installation, setup and care, you should enjoy many years of unparalleled video performance.

This RuncoCare Standard Limited Warranty is provided free of charge by Runco International with the purchase of a covered Runco product. The following sets forth Runco's Standard Limited Warranty applicable to all Runco projectors, processors, LCD and plasma display products, with the exception of the following models: XP-103DHD, SC-1, SC-1a and VW-100HD[1].

The following terms and conditions of the RuncoCare Standard Limited Warranty represent a contract between us, Runco International and you, the customer who has purchased a Runco product. This contract applies to purchases of covered Runco products occurring on or after September 1, 2008. Runco reserves the right to change the terms of this contract, and such changes shall apply to purchases of covered Runco products that occur on or after any future effective date.

RuncoCare Standard Features

- Two-year protection from defects in material and workmanship
- Access to 24x7 phone support
- Complimentary, second-day one-way shipping

Warranty Coverage

Runco warrants its products to be free from defects in material and workmanship during the warranty period provided below. If, in Runco's determination, a product proves to be defective in material or workmanship during the warranty period, Runco will repair the product, replace the product with a similar new or like new product, or refund a prorata share of the purchase price (calculated based on the remainder of the warranty period and the thencurrent MSRP[2] of a similar product), if repair or replacement of the product is determined by Runco to not be feasible.

Length of Warranty

Runco products are warranted for two (2) years from the date of shipment from Runco. Lamps are warranted six (6) months from the date of shipment or 1000 hours, whichever comes first. All other accessories, which includes, but is not limited to, cables, remotes, carrying cases, lens cap and other peripherals sold with the Runco product, are warranted for ninety (90) days from the date of shipment. Repaired product or replacement lamp is subsequently warranted for the remaining portion (if any) of the original warranty term or 90 days from the date the product was shipped to you, whichever is longer.

Eligibility

This RuncoCare Standard Limited Warranty is valid only for the first customer who purchases the covered product from an authorized Runco dealer or distributor. This warranty is not transferable. You may be required to provide proof of purchase in order to receive warranty services.

1. Runco may update this list of products excluded from this warranty from time to time at Runco's sole discretion, but updates to the list of covered products will not apply on a retroactive basis.
2. MSRP is defined as the most recent product price listed on Runco's price list.

RuncoCare Claim Procedure

In the event of a product defect, please follow the warranty claim procedure provided below:

1. The Customer is required to contact a Runco dealer or Runco Technical Support via email at support@runco.com or via phone at (toll free) 800-23RUNCO (800-237-8626). If the customer is located outside North America, call +3589 4200 554 in Europe for product service.
2. Be prepared to provide the date of purchase, the place of purchase, serial number, product model number, description of the problem and troubleshooting steps already attempted.
3. Runco Technical Support staff will attempt to correct any minor issues that may be causing the problem. If Runco is unable to fix the problem to the customer's satisfaction, Runco will issue a Return Material Authorization (RMA) if it is determined that the claim was made within the coverage period of the Standard Limited Warranty.
4. The customer will need to return the defective product to the Runco repair depot location specified by the Runco technical support representative. The customer will need to properly package the defective product, consisting of the product only, and not include any accessories (e.g., cables, remotes, carrying cases, lens, lens cap and other peripherals) and return it to the Runco repair depot specified by the technical support representative. It is the customer's responsibility to properly package the hardware, include all appropriate materials, and return it to the location specified by the Runco technical support department. The customer will need to address and resolve any shipping damage claims directly with the shipping company.
5. The customer is responsible for providing a suitable box to ship the defective product to an authorized Runco repair depot. Boxes may be purchased from a Runco technical support representative.
6. The customer is responsible for paying freight charges to ship the defective product to an authorized Runco repair depot.
7. Runco will pay freight charges to return the repaired/replacement product to the customer from the Runco repair depot.
8. Once an RMA has been created, the customer may contact serviceorders@runco.com for followup questions or confirmation status of the claim process.

Warranty Exclusions

This RuncoCare Standard Limited Warranty does not include or is limited by the following:

1. Products not purchased from an authorized Runco dealer
2. Rental costs incurred by the customer in the event of product defect or failure
3. Any product with a defaced, modified, or removed serial number
4. Damage, deterioration, or malfunction resulting from:
   - a Accident, abuse, misuse, neglect, improper ventilation, fire, water, disaster, lightning, or other acts of nature, smoke exposure (cigarette or otherwise), unauthorized product modification (including use of an unauthorized mount), or failure to follow instructions supplied with the product
   - b Repair or attempted repair by anyone not authorized by Runco
   - c Any damage to the product due to shipment
   - d Removal or installation of the product
   - e Causes external to the product, such as electric power fluctuations or failure
   - f Use of supplies or parts not meeting Runco's specifications
   - g Normal wear and tear
   - h Expected lamp degradation and normal decrease in lamp output over a period of time or as the lamp is consumed
   - i Customer caused defects, including but not limited to, scratched/defaced/altered plastics

j Failure to follow maintenance procedures as outlined in the product's user guide where a schedule is specified for regular cleaning of the product

k Opening the product and/or tampering with internal circuitry

l Products lost, stolen or discarded

m Any damage or dissatisfaction associated with latent images, "burnin," or any other damage determined by Runco to be the result of customer use patterns

n Any other cause, which does not relate to a product defect in material or workmanship

5. Removal, installation, and setup service charges are excluded from this Standard Limited warranty
6. Runco's warranty does not cover black uniformity issues or other LCD issues associated with usage outside the Runco recommended guidelines and specifications for the product
7. Second day shipment delivery time and availability may vary based on origin and destination and Runco is unable to deliver to PO Box and FPO Box addresses

Extended Service Options

Runco offers extended and expanded service plans. For information on additional product protection, please email serviceorders@runco.com or call (toll free) 800-23RUNCO (800-237-8626).

Online Product Registration

Please visit http://www.runco.com/info.html to register product.

Limitation of Implied Warranties

RUNCO PROVIDES NO WARRANTIES, EXPRESS OR IMPLIED, EXCEPT THOSE EXPRESSLY PROVIDED HEREIN. RUNCO EXPRESSLY DISCLAIMS ALL OTHER WARRANTIES, INCLUDING THE IMPLIED WARRANTIES OF MERCHANTABILITY AND FITNESS FOR A PARTICULAR PURPOSE.

Exclusion of Damages

RUNCO'S MAXIMUM AGGREGATE LIABILITY HEREUNDER IS LIMITED TO THE COST OF REPAIR OR REPLACEMENT OF THE PRODUCT.

1. RUNCO SHALL NOT BE LIABLE FOR DAMAGE TO OTHER PROPERTY CAUSED BY ANY DEFECT IN THE PRODUCT, DAMAGES BASED UPON INCONVENIENCE, LOSS OF USE OF THE PRODUCT, LOSS OF TIME, LOSS OF PROFITS, LOSS OF BUSINESS OPPORTUNITY, LOSS OF GOODWILL, INTERFERENCE WITH BUSINESS RELATIONSHIPS, OR OTHER COMMERCIAL LOSS, EVEN IF THE CUSTOMER HAS BEEN ADVISED OF THE POSSIBILITY OF SUCH DAMAGES.
2. RUNCO SHALL NOT BE LIABLE FOR ANY CONSEQUENTIAL, INCIDENTAL, INDIRECT, SPECIAL, OR PUNITIVE DAMAGES ANY OTHER DAMAGES, WHETHER INCIDENTAL, INDIRECT, CONSEQUENTIAL OR OTHERWISE.
3. RUNCO SHALL NOT BE LIABLE FOR ANY CLAIM AGAINST THE CUSTOMER BY ANY OTHER PARTY.

Effect of Local Law

This warranty gives you specific legal rights, and you may have other rights, which vary from locality to locality. Some localities do not allow limitations on implied warranties and/or do not allow the exclusion of incidental or consequential damages, so the above limitations and exclusions may not apply to you.

COPYRIGHT AND TRADEMARKS:

© Copyright 2009 Runco International, LLC ("Runco"). This document contains proprietary information protected by copyright, trademark and other intellectual property laws. All rights are reserved. No part of this manual may be reproduced by any mechanical, electronic or other means, in any form, without prior written permission of Runco.

The trademarks reporduced in this Runco Owner's Manual and used on the Runco Products are either owned by Runco or are licensed by Runco. You may not reproduce or use the trademarks without the prior written consent of Runco.

THX and the THX logo are trademarks of THX Ltd. which may be registered in some jurisdictions. All rights reserved.

Runco Products are manufactured under one or more of the following patents: US. Patent 6755540 and Other Patents Pending.

Important Safety Instructions

Thank you for your purchase of this quality Runco video product! For the best performance, please read this manual carefully as it is your guide through the menus and operation.

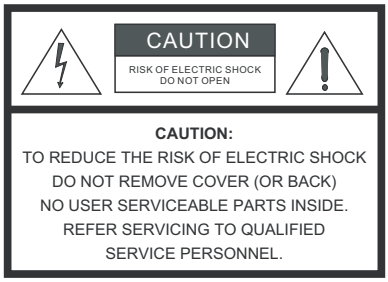

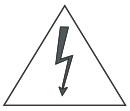

WARNING
This symbol is intended to alert the user to the presence of uninsulated “dangerous voltage” within the product’s enclosure that may be of sufficient magnitude to constitute a risk of electric shock.

This symbol is intended to alert the user to the presence of important operating and maintenance (servicing) instructions in the literature accompanying the appliance.

1. Read these instructions.
2. Keep these instructions.
3. Heed all warnings.
4. Follow all instructions.
5. Do not use this apparatus near water.
6. Clean only with a dry cloth.
7. Do not block any of the ventilation openings. Install in accordance with the manufacturer’s instructions.
8. Do not install near any heat sources such as radiators, heat registers, stoves, or other apparatus (including amplifiers) that produce heat.
9. Do not defeat the safety purpose of the polarized or grounding type plug. A polarized plug has two blades with one wider than the other. A grounding type plug has two blades and a third grounding prong. The wide blade or the third prong is provided for your safety. When the provided plug does not fit into your outlet, consult an electrician for the replacement of the obsolete outlet.
10. Protect the power cord from being walked on or pinched particularly at plugs, convenience receptacles and the point where they exit from the apparatus.
11. Only use the attachments/accessories specified by the manufacturer.
12. Use only with a cart, stand, tripod, bracket or table specified by the manufacturer or sold with the apparatus. When a cart is used, use caution when moving the cart/apparatus to avoid injury from tip-over.

13. Unplug this apparatus during lightning storms or when unused for long periods of time.
14. Refer all servicing to qualified service personnel. Servicing is required when the apparatus has been damaged in any way, such as power supply cord or plug is damaged, liquid has been spilled or objects have fallen into the apparatus, the apparatus has been exposed to rain or moisture, does not operate normally, or has been dropped.
15. The +12V trigger only outputs 12Vdc signal for triggering. Do not connect to any other power input or output. This could cause damage to this unit.
16. Keep the packing material in case the equipment should ever need to be shipped.
17. The lamp becomes extremely hot during operation. Allow the projector to cool down for approximately 45 minutes prior to removing the lamp assembly for replacement.
18. Do not operate lamps beyond the rated lamp life. Excessive operation of lamps beyond rated life could cause them to explode in rare occasions.

19. Never look directly into the lens when the lamp is on.

Compliance Information

DECLARATION OF CONFORMITY:

Manufacturer's Name: Runco International, LLC

Manufacturer's Address: 1195 NW Compton Drive, Beaverton, OR 97006-1992

hereby declares that the Products' Model Numbers:

VX-44d, VX-44d/CineWide, VX-44d/CineWide with AutoScope, VX-55d, VX-55d/CineWide and VX-55d/CineWide with AutoScope

conform with the provisions of:

Council Directive 2004/108/EC on Electromagnetic Compatibility;

EN 55022 "Limits and methods of measurements of radio interference characteristics of information technology equipment" 1998;

EN 55024 "Limits and methods of measurements of immunity characteristics of information technology equipment" 1998;

Including:

- EN 61000-4-2 "Electromagnetic compatibility (EMC) Part 4: Testing and measurement techniques Section 2: Electrostatic discharge immunity test"
- EN 61000-4-3 "Electromagnetic compatibility (EMC) Part 4: Testing and measurement techniques Section 3: Radiated, Radio-Frequency, Electromagnetic Field Immunity Test"
- EN 61000-4-4 "Electromagnetic compatibility (EMC) Part 4: Testing and measurement techniques Section 4: Electrical fast transient/burst immunity test"
- EN 61000-4-5 "Electromagnetic compatibility (EMC) Part 4: Testing and measurement techniques Section 5: Surge immunity test"
- EN 61000-4-6 "Electromagnetic compatibility (EMC) Part 4: Testing and measurement techniques Section 6: Conducted disturbances induced by radio-frequency fields immunity test"
- EN 61000-4-8 "Electromagnetic compatibility (EMC) Part 4: Testing and measurement techniques Section 8: Conducted disturbances induced by power frequency magnetic fields immunity test"
- EN 61000-4-11 "Electromagnetic compatibility (EMC) Part 4: Testing and measurement techniques Section 11: Voltage dips, short interruptions and voltage variations immunity tests"

And:

- EN 61000-3-2 "Electromagnetic compatibility (EMC) Part 3, Section 2: Limits for harmonic current emissions (equipment input current up to and including 16 A per phase)" 2000;
- EN 61000-3-3 "Electromagnetic compatibility (EMC) Part 3, Section 3: Limitations of voltage changes, voltage fluctuations and flicker in public low-voltage supply systems, for equipment with rated current up to and including 16 A and not subject to conditional connection" 1995;

Council Directive 2006/95/EC and amended by M1 and C1 on Low Voltage Equipment Safety;

EN 60950 "Safety of information technology equipment, including electrical business equipment"

The Technical Construction file required by this Directive is maintained at the corporate headquarters of Runco International, LLC, located at 1195 NW Compton Drive, Beaverton, OR 97006-1992.

Date of Declaration: February 2009

FCC PART 15:

NOTE: This equipment has been tested and found to comply with the limits for a Class A digital device, pursuant to Part 15 of the FCC Rules. These limits are designed to provide reasonable protection against harmful interference in a residential installation.

This equipment generates, uses and can radiate radio frequency energy and, if not installed and used in accordance with the instructions, may cause harmful interference to radio communications. However, there is no guarantee that interference will not occur in a particular installation. If this equipment does cause harmful interference to radio or television reception, which can be determined by turning the equipment off and on, the user is encouraged to try to correct the interference by one or more of the following measures:

- Reorient or relocate the receiving antenna.
- Increase the separation between the equipment and receiver.
- Connect the equipment into an outlet on a circuit different from that to which the receiver is connected.
- Consult the dealer or an experienced radio/TV technician for help.

INDUSTRY CANADA (ICES-003):

This Class A digital apparatus complies with Canadian ICES-003.

Cet appareil numérique de la classe A est conforme à la norme NMB-003 du Canada.

PRODUCT DISPOSAL:

The Product contains small amounts of tin, lead and/or mercury. Disposal of these materials may be regulated due to environmental considerations.

IMPORTANT RECYCLE INSTRUCTIONS

Lamp(s) inside this product contain mercury. This product may contain other electronic waste that can be hazardous if not disposed of properly. Recycle or dispose in accordance with local, state, or federal Laws.

For more information, contact the Electronic Industries Alliance at WWW.EIAE.ORG.

For lamp specific disposal information check WWW.LAMPRECYCLE.ORG.

DISPOSAL OF OLD ELECTRICAL AND ELECTRONIC EQUIPMENT (Applicable throughout the European Union and other European countries with separate collection programs)

This symbol found on your product or on its packaging, indicates that this product should not be treated as household waste when you wish to dispose of it. Instead, it should be handed over to an applicable collection point for the recycling of electrical and electronic equipment. By ensuring this product is disposed of correctly, you will help prevent potential negative consequences to the environment and human health, which could otherwise be caused by inappropriate disposal of this product. The recycling of materials will help to conserve natural resources. This symbol is only valid in the European Union. If you wish to discard this product, please contact your local authorities or dealer and ask for the correct method of disposal.

Notes:

Table of Contents

RuncoCare™ Standard Two Year Limited Warranty iii

Important Safety Instructions vii

Compliance Information viii

1. Introduction 1

About This Manual 1

Target Audience 1

If You Have Comments About This Manual... 1

Textual and Graphic Conventions 1

Using This Manual 2

Description, Features and Benefits 3

Key Features and Benefits 4

Parts List 4

2. Controls and Functions 5

VX-44d/-55d at a Glance 5

VX-44d/-55d Input Panel 6

VX-44d/-55d Built-In Keypad 8

DHD Controller Front Panel 10

DHD Controller Rear Panel 12

Outputs 12

Inputs 13

VX-44d/-55d Remote Control Unit 14

3. Installation 17

Remote Control 17

Notes on Batteries 17

Notes on Remote Control Operation 17

Quick Setup 18

Installation Considerations 19
Installation Type 19
Ambient Light 19
Throw Distance 20
Vertical and Horizontal Position 21
Vertical and Horizontal Lens Shift 21
Folded Optics 24
Audio/Video Synchronization Issues 24
Other Considerations 25
Installing the Projection Lens 25
Installing the Optional CineWide Lens Mount 26
Remove Projector Front Feet (CineWide with AutoScope) 26
Install Anamorphic Lens Motor (CineWide with AutoScope) or Base Plate (fixed CineWide) 26
Install Projector Stand (CineWide with AutoScope, Floor-Mount) 27
Mounting the VX-44d/-55d 28
Floor Mounting (Upright) 28
Ceiling Mounting (Inverted) 28
Adjusting the Projection Angle 28
Connections to the VX-44d/-55d and DHD Controller 29
Connector Panel Access 29
Connecting the DHD Controller to the VX-44d/-55d 29
Connecting Source Components to the DHD Controller 30
RS-232 Controller Connection 36
Connecting 12-volt Trigger Outputs to External Equipment 37
Connecting an External IR Receiver to the DHD Controller 38
Connecting to AC Power 39
Turning on the Power 40
Primary Lens Adjustments 41
Focus and Zoom 41
Vertical and Horizontal Lens Shift 41
Adjusting the Picture Orientation 41
Installing and Adjusting the CineWide Anamorphic Lens 42
Attach Lens Mounting Assembly to Lens Motor Carriage Plate (CineWide with AutoScope) or Base Plate (fixed CineWide) 42
Configure Lens Motor Trigger (CineWide with AutoScope) 43
Adjust the Anamorphic Lens 43

Optimizing Lamp and Lens Performance 46
Navigating the Projector Menus 46
Installation Menu 47
Working With the Lamp 49
4. Operation 53
Using the On-Screen Menus 53
Main Menu 54
Input Source 55
Aspect Ratio 55
Picture 58
Input Position 62
Memory Presets 64
Information 65
Calibration 65
Service 70
5. Maintenance and Troubleshooting 77
Lamp and Filter Replacement 77
Lamp Replacement 77
Filter Replacement 79
Lens Replacement 79
Troubleshooting Tips 81
Error Codes 83
6. External Control 87
Serial Communications 87
RS-232 Connection and Port Configuration 87
Serial Command Syntax 87
Using Discrete IR Codes 92
IR Command Protocol 92
IR Command List 93
7. Specifications 95
VX-44d/-55d Specifications 95
DHD Controller Specifications 97
VX-44d/-55d Dimensions 98
Supported Timings 99

Notes:

List of Figures

2-1. VX-44d/-55d Top/Rear/Front View 5
2-2. VX-44d/-55d Input Panel 6
2-3. VX-44d/-55d Built-in Keypad 8
2-4. DHD Controller Front Panel 10
2-5. DHD Controller Rear Panel 12
2-6. DHD Controller/VX-44d/-55d Remote Control 14
3-1. Estimating Throw Distance 20
3-2. Projector Placement 21
3-3. Vertical Lens Shift (EXAMPLE ONLY) 21
3-4. Horizontal Lens Shift (EXAMPLE ONLY) 22
3-5. Folded Optics 24
3-6. Lens Assembly (Front View) 25
3-7. Mounting Angle Ranges (Front-to-Back and Side-to-Side) 28
3-8. Connecting the VX-44d/-55d to the DHD Controller 29
3-9. RS-232 Connection from the DHD Controller to the VX-44d/-55d 30
3-10. HDMI Source Connections 31
3-11. Component Video Source Connections 32
3-12. RGBHV Source Connections 33
3-13. SCART RGBS Source Connections 34
3-14. S-Video and Composite Video Source Connections 35
3-15. RS-232 Control System Connection 36
3-16. Connecting 12-volt Trigger Outputs 37
3-17. External IR Receiver Connection 38
4-1. DHD Controller OSD Menu Structure for VX-44d/-55d 53
4-2. Typical PLUGE Pattern for Adjusting Brightness 58
4-3. Typical Gray Bar Pattern for Adjusting Contrast 59
4-4. Typical Color Bar Pattern for Adjusting Color Saturation and Tint 60
4-5. Typical Test Pattern for Adjusting Sharpness 61
4-6. Overscan Modes 63
4-7. CIE 1931 Chromaticity Diagram 67
4-8. Keystone Correction 72
5-1. Removing the Lamp Door 77

5-2. Unlocking the Lamp 77
5-3. Removing the Lamp 78
5-4. Installing A New Lamp 78
5-5. Removing the Primary Lens 80
6-1. RC5 Message Format 93
7-1. VX-44d/-55d Dimensions 98

1. Introduction

1.1 About This Manual

This Owner's Manual describes how to install, set up and operate the Runco Video Extreme™ Series DLP Projector (Models VX-44d and VX-55d) and DHD Controller.

Throughout this manual, the Runco Video Extreme™ DLP Projector and DHD Controller are referred to as the "VX-44d/-55d." The information in this manual applies to both projectors except where otherwise indicated.

Target Audience

Runco has prepared this manual to help theater installers and end users get the most out of the VX-44d/-55d.

Runco has made every effort to ensure that this manual is accurate as of the date it was printed. However, because of ongoing product improvements and customer feedback, it may require updating from time to time. You can always find the latest version of this and other Runco product manuals on-line, at www.runco.com.

If You Have Comments About This Manual...

Runco welcomes your comments about this manual. Send them to techpub@runco.com.

Textual and Graphic Conventions

Text Conventions: The following conventions are used in this manual, in order to clarify the information and instructions provided:

- Remote and built-in keypad button identifiers are set in upper-case bold type; for example, "Press **EXIT** to return to the previous menu."
- Computer input (commands you type) and output (responses that appear on-screen) is shown in monospace (fixed-width) type; for example: "To change the aspect ratio to Letterbox, type `LETTERBOX` **<Enter>**."
- All keys with functional names are initial-capped, set in bold type and enclosed in angle brackets. These keys are the following: **<Enter>, <Spacebar>, <Control>, <Esc>** and **<Tab>**.
- **<Enter>** indicates that you may press either the RETURN or ENTER key on your keyboard if it has both keys.

In addition to these conventions, underlining, boldface and/or italics are occasionally used to highlight important information, as in this example:

Note *A carriage return **must** be used after each command or string.*

Graphic Conventions: These symbols appear in numerous places throughout the manual, to emphasize points that you must keep in mind to avoid problems with your equipment or injury:

Tip	*TIPS highlight time-saving short cuts and helpful guidelines for using certain features.*
Note	*NOTES emphasize text with unusual importance or special significance. They also provide supplemental information.*
Caution	*CAUTIONS alert users that a given action or omitted action can degrade performance or cause a malfunction.*
WARNING	*WARNINGS appear when a given action or omitted action can result in damage to the equipment, or possible non-fatal injury to the user.*
DANGER!	*DANGER appears when a given action can cause severe injury or death.*

1.2 Using This Manual

Use the following table to locate the specific information you need in this manual.

If you need...	... Turn to page:
Information about obtaining service	iv
General information about the Video Extreme™ DLP Projector and DHD Controller	3
Installation instructions	17
First-time configuration instructions	41
Advanced configuration instructions	65
Troubleshooting tips	81
Product specifications	95

1.3 Description, Features and Benefits

Runco's VX-44d and VX-55d bring the most advanced technology, 1080p SuperOnyx™ resolution and the world's first THX® Certified video products together in truly awesome fashion.

They use a new, ingeniously engineered 3-chip DLP™ light engine, combined with an advanced Xenon lamp illumination system to bring astoundingly high performance and ultra high resolution to the very best theaters on the planet.

The VX-44d features a 1000W Xenon lamp, while the VX-55d uses a 1.2-kW Xenon lamp to produce Runco's brightest 1080p pictures ever. Four CinOptx™ zoom lenses are available with broad AxiShift™ motorized horizontal and vertical lens shift capability. Runco engineers have ensured that light is efficiently culminated through the implementation of O-Path™ technology and have also engineered ISF™ calibration standards into these projectors.

The VX-44d and VX-55d are furnished with Runco's newest, next-generation, all-digital DHD Controller/Scaler/Processor, featuring advanced Vivix III™ processing, superb scaling, and the industry's most advanced aspect ratio control system.

For uncompromising widescreen reproduction of movies originally filmed in the "scope" (2.35:1) format, the VX-44d/-55d can be equipped with Runco's patent-pending CineWide™ technology, a combination of software, electronics and high-quality anamorphic optics. CineWide maintains constant vertical height on the screen just as in a movie theater. When a viewer transitions from 1.78:1 (16:9) program material to 2.35:1, the image simply gets wider while full height is maintained. Also available with the VX-44d/-55d is CineWide with AutoScope™, an enhanced, remote-controlled motorized version of CineWide.

Note *CineWide requires the use of a 2.35:1 or similar aspect ratio superwide format screen.*

Discrete IR and RS-232 control make custom installation seamless, while discrete source and aspect ratio selection accommodate any automation control system.

Key Features and Benefits ➤ The VX-44d/-55d offers these key features and benefits:

- Native Resolution: 1920 x 1080
- Three-chip Digital Light Processing (DLP) system
- Two HDMI Inputs (on DHD Controller) with High-bandwidth Digital Content Protection (HDCP)
- HDTV Compatible
- CinOptx™ *Telesto* lens options for stunning sharpness and throw distance flexibility

Parts List ➤ Your VX-44d/-55d is shipped with the following items. If any items are missing or damaged, please contact your Runco dealer or Runco Customer Service at (800) 23-RUNCO.

- Video Extreme™ DLP Projector and DHD Controller
- Remote Control Unit and two (2), AAA-size batteries
- Two (2), 110-VAC power cords (VX-44d)

  – OR –

  One 110-VAC and one 220-VAC power cord (VX-55d)
- RJ-11 Telephone Cable, 50 feet (15.24 meters)
- Serial Port Adapter, RJ-11 Female to DB-9 Male
- Rack-mounting brackets and hardware for the DHD Controller
- Runco VX-44d/-55d Installation/Operation Manual (this document)

Optional Accessories:

- CineWide™ technology (fixed, secondary anamorphic lens)
- CineWide™ with AutoScope™ system (secondary anamorphic lens and motorized mount)
- Ceiling mount kit (part number 956-0096-00)

2. Controls and Functions

2.1 VX-44d/-55d at a Glance

Figure 2-1 shows the key VX-44d/-55d components.

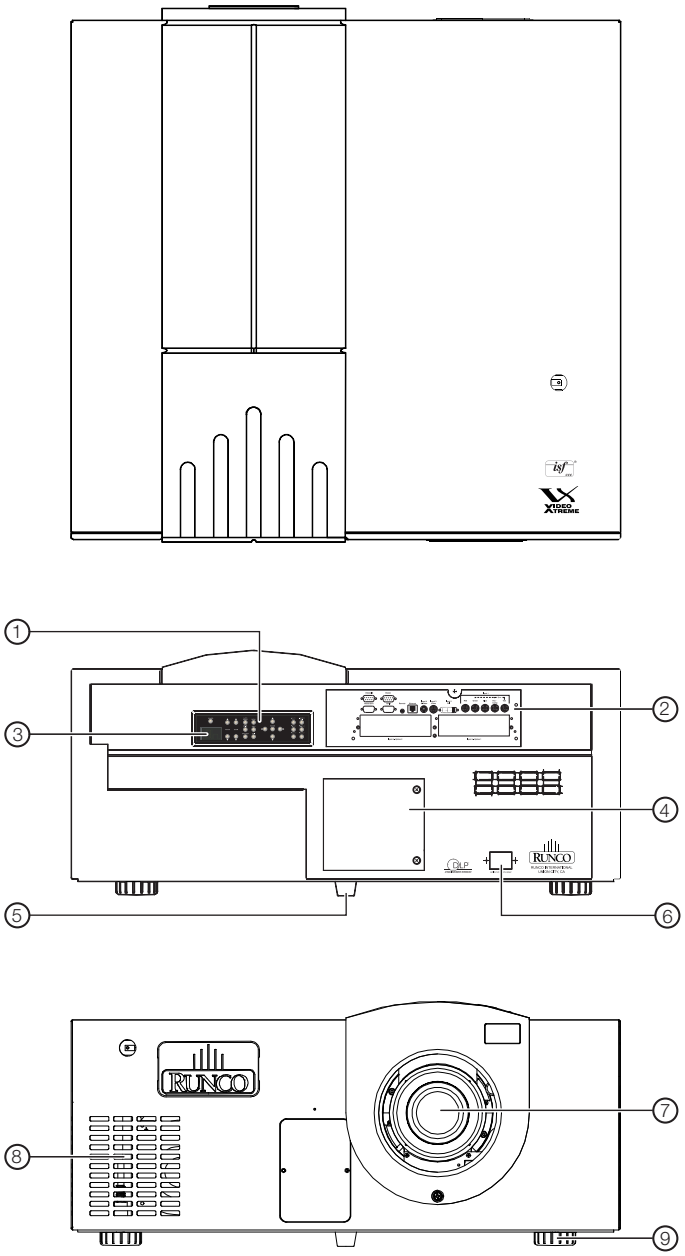

Figure 2-1. VX-44d/-55d Top/Rear/Front View

1. **BUILT-IN KEYPAD**
   The built-in keypad is located at the back of the projector, beside the input panel. Use it to perform service-related tasks on the projector. For more information, refer to ***VX-44d/-55d Built-In Keypad*** on page 8.
2. **INPUT PANEL**
   Connect the DHD Controller outputs here.
3. **LED STATUS DISPLAY**
   Indicates current operating status of the projector.
4. **LAMP COVER**
   Remove this cover to access the lamp compartment.
5. **REAR FOOT (Stationary)**
6. **POWER INPUT (100 to 240 VAC)**
   Connect the VX-44d/-55d to power here. (The VX-44d requires 100 to 240 VAC; the VX-55d requires 200 to 240 VAC.)
7. **PROJECTION LENS**
8. **INTAKE VENT**
   Allows cool air to enter the projector, to help maintain proper operating temperature.
9. **ADJUSTABLE FEET (2)**
   Located on the underside of the projector are two adjustable feet. Raise or lower these feet when positioning the projector to ensure it is level on all sides so the displayed image will appear rectangular without any keystone.

2.2 VX-44d/-55d Input Panel

Figure 2-2 shows the VX-44d/-55d rear input panel.

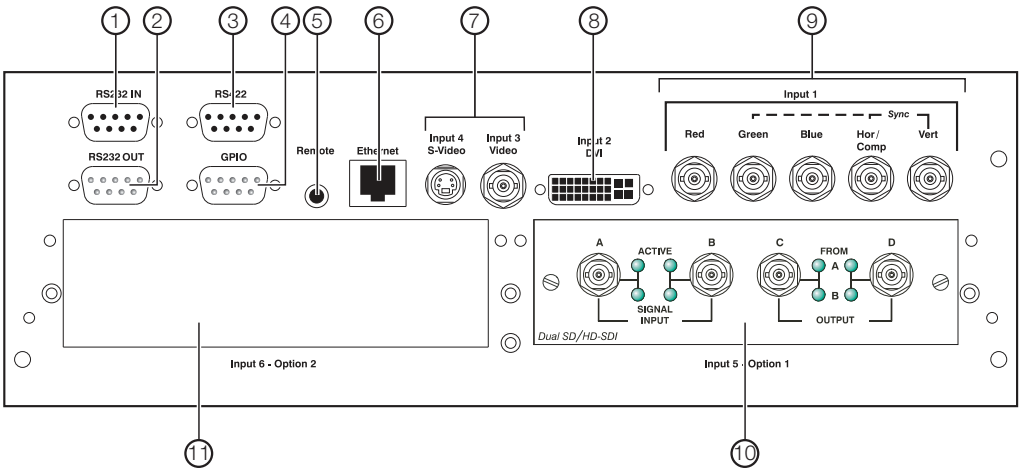

Figure 2-2. VX-44d/-55d Input Panel

1. **RS232 IN**
   Connect the RS-232 output from the DHD Controller here, using the provided RJ11-to-DB9 adapter and communication cable.
2. **RS232 OUT**
   Not used.
3. **RS422**
   Not used.
4. **GPIO**
   Not used.
5. **REMOTE**
   Wired input from an external remote control or infrared receiver.
6. **ETHERNET**
   Reserved for future use.
7. **INPUT 3 (Video) / INPUT 4 (S-Video)**
   Not used. Connect all video sources to the DHD Controller.
8. **INPUT 2 (DVI)**
   HDCP-compliant digital video input. Connect the HDMI output from the DHD Controller to this input.
9. **INPUT 1 (RGBHV)**
   Not used. Connect all video sources to the DHD Controller.
10. **INPUT 5 (Option 1)**
    Reserved for future use.
11. **INPUT 6 (Option 2)**
    Reserved for future use.

2.3 VX-44d/-55d Built-In Keypad

Figure 2-3 shows the VX-44d/-55d built-in keypad.

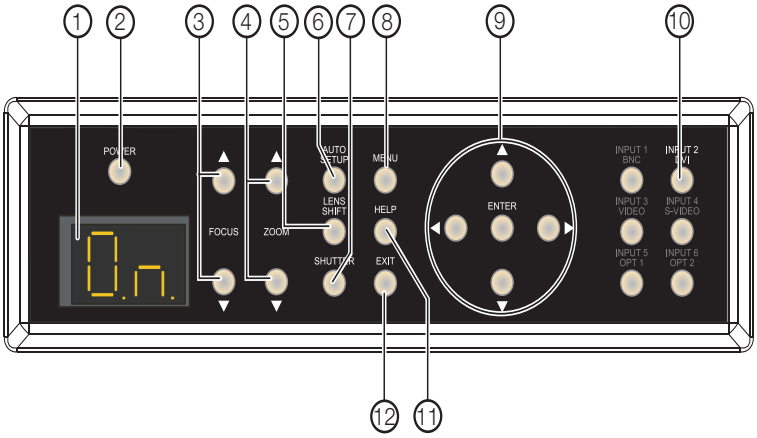

Figure 2-3. VX-44d/-55d Built-in Keypad

1. **LED STATUS DISPLAY**
   The LED status window displays an active pattern of segments to indicate the projector is changing its state from powered down to powered up. The message “On” appears in the display when the projector has completed its initialization and is ready for use.
2. **POWER BUTTON**
   Not used. Use the DHD Controller to turn the projector on or off.
3. **FOCUS (▲ / ▼)**
   Use these buttons to focus the projected image.
4. **ZOOM (▲ / ▼)**
   Use these buttons to increase or decrease the projected image size.
5. **LENS SHIFT**
   Press this button to access the motorized lens shift controls.
6. **AUTO SETUP**
   Press this button to initiate an automated process in which the projector optimizes critical display parameters for the current source.
7. **SHUTTER**
   Press and hold this button for two seconds to toggle the internal mechanical shutter blade closed or open. A closed shutter blanks the display (turns it to black). Close the shutter to mute all display while maintaining access to projector functions. Opening the shutter restores the image.
8. **MENU**
   Press this button to show or hide the projector menus.

Note *The VX-44d/-55d has its own internal menu system, separate from that of the DHD Controller. However, it is intended for use by trained service personnel only.*

9. **Menu Navigation Buttons:**

   UP BUTTON (▲)
   Used to move the menu cursor up in the VX-44d/-55d menu system.

   LEFT BUTTON (◀)
   Used to move the menu cursor left in the VX-44d/-55d menu system.

   DOWN BUTTON (▼)
   Used to move the menu cursor down in the VX-44d/-55d menu system.

   RIGHT BUTTON (▶)
   Used to move the menu cursor right in the VX-44d/-55d menu system.

   ENTER BUTTON
   When an item is highlighted on the On-Screen Display, the **ENTER** button selects the item.

10. **INPUT 2 (DVI)**
    Press this button to select projector Input 2 (HDMI output from the DHD Controller).

11. **HELP**
    Press **HELP** to display on-screen help text. Press **HELP** again (or **EXIT**) to hide it.

12. **EXIT**
    When in the menu structure, the **EXIT** button brings the menu back one page or cancels the current function.

2.4 DHD Controller Front Panel

Figure 2-4 shows the controls and indicators on the DHD Controller front panel; the paragraphs that follow describe them.

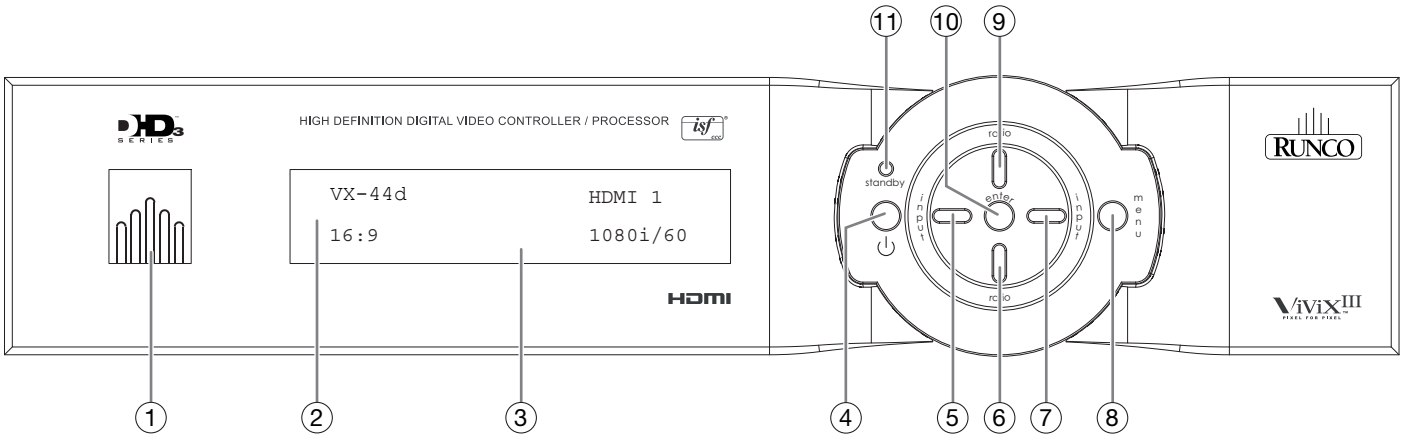

Figure 2-4. DHD Controller Front Panel

1. **RUNCO ICON**
   Lights blue to indicate that the controller is on or powering up.
2. **IR SENSOR**
   Receives IR commands from the remote.
3. **VACUUM FLUORESCENT DISPLAY**
   Can be used instead of the On-Screen Display (OSD). Displays currently-selected menu or – if no menu is selected – the connected display device model, current source, input resolution and aspect ratio.
4. **ON/STANDBY BUTTON**
   Press once to toggle from standby mode to on mode. Press it again to return to standby mode. For a discrete on or off command, you can use the direct access buttons on the remote control.
5. **LEFT BUTTON**
   Used to direct-select inputs or move the menu cursor left in the OSD. When no menu is present on-screen, the **LEFT** button toggles through the different sources, in this order:
   HDMI 2 - HDMI 1 - SCART - HD 2 - HD 1 - Component - S-Video 2 - S-Video 1 - Composite Video
6. **DOWN BUTTON**
   Use to direct-select aspect ratios or move the menu cursor down in the OSD. When no menu is present on-screen, this button toggles through the different aspect ratios, in this order:
   16:9 - 4:3 - Letterbox - VirtualWide - Cinema - Virtual Cinema - Native

Note *Virtual Cinema is available only on the VX-44d/-55d/CineWide or VX-44d/-55d/CineWide with AutoScope. For more information about aspect ratios, refer to Table 4-1.*

7. **RIGHT BUTTON**
   Used to direct-select inputs or move the menu cursor right in the OSD. When no menus are present on-screen, the **RIGHT** button toggles through the different sources, in this order:
   Composite Video - S-Video 1 - S-Video 2 - Component - HD 1 - HD 2 - SCART - HDMI 1 - HDMI 2
8. **MENU BUTTON**
   Press the **MENU** button to bring up the main menu, or to exit the current menu and return to the previous one.
9. **UP BUTTON**
   Use to direct-select aspect ratios or move the menu cursor up in the OSD. When no menus are present on-screen, the **UP** button toggles through aspect ratios in the following order:
   Native - Virtual Cinema - Cinema - VirtualWide - Letterbox - 4:3 - 16:9
10. **ENTER BUTTON**
    When an item is highlighted on the OSD, the **ENTER** button selects the item.
11. **STANDBY LED**
    Lights amber when the DHD Controller is in standby mode; otherwise it is off.

2.5 DHD Controller Rear Panel

Figure 2-5 shows the rear connector panel on the DHD Controller.

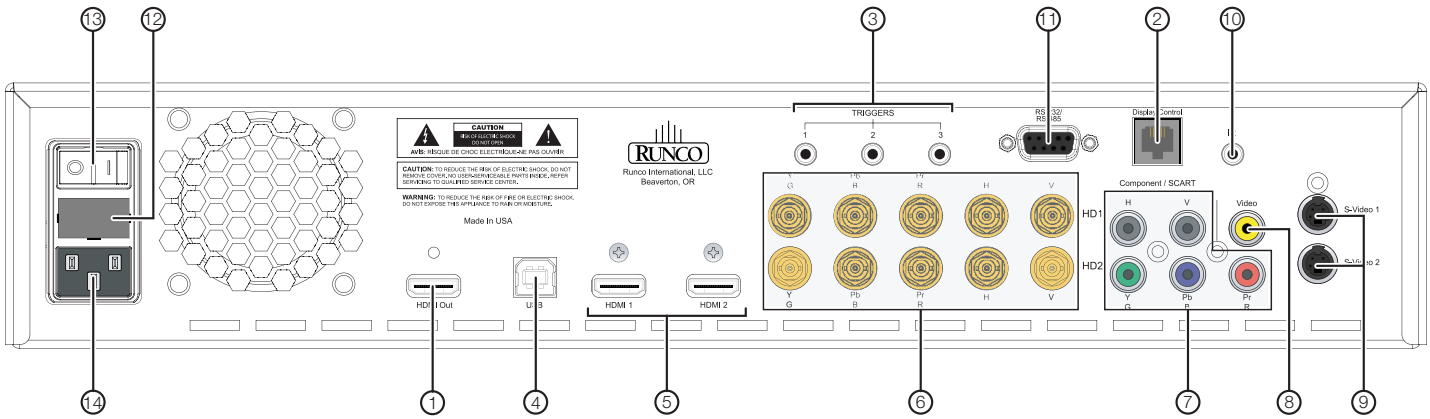

Figure 2-5. DHD Controller Rear Panel

Outputs ➤

1. **HDMI Out**
   Connect this to **Input 2** (DVI) on the VX-44d/-55d (see Figure 2-2).
2. **Display Control**
   Connect this to the **RS-232 IN** input on the VX-44d/-55d, using the provided communication cable.
3. **TRIGGERS**
   Connection for up to three (3), 12-volt trigger-controlled devices such as retractable screens, screen masks or a CineWide with AutoScope system. Output current is limited to 250 milliamperes (mA).

◄ ***Inputs***

4. **USB**
   A standard, USB Series “B” connection to a personal computer. (For future use.)
5. **HDMI 1 / HDMI 2 (Digital)**
   HDCP-compliant digital video inputs for connecting an HDMI or DVI source.
6. **HD1 / HD2 (5 x Analog BNCs)**
   Two inputs (five BNCs per input) for connecting standard-definition (SD = 480i/576i), enhanced-definition (ED = 480p/576p) or high-definition (HD = 720p/1080i/1080p) component video sources, or RGBHV sources such as personal computers.
7. **Component / SCART (5 x RCA connectors)**
   SD/HD input for connecting SDTV, EDTV or HDTV component video sources, or RGBHV sources. Also provides RGB input for SCART RGBS sources.
8. **Video**
   Standard, composite video input for connecting a VCR, camcorder or other composite video source. Also provides composite sync input for SCART RGBS sources.
9. **S-Video 1 / S-Video 2**
   Two, standard S-Video inputs for connecting a DVD player, satellite receiver or Super VHS (S-VHS) VCR.
10. **IR**
    Wired input from a Niles- or Xantech-compatible, infrared (IR) repeater system. It is a 3.5-mm, mini phono jack, wired as follows:
    Ring = No connection
    Tip = IR Input
    Sleeve = Ground
11. **RS-232 / RS-485**
    A female, 9-pin D-sub connector for interfacing with a PC or automation/control system. (Currently, only RS-232 interface is supported.)
12. **MAIN AC FUSE**
    This is the main AC input fuse (5mm x 20mm, 500 mA, 250V slow-blow).
13. **MAIN POWER SWITCH**
    Disconnects or applies power to the DHD Controller.
14. **POWER INPUT (100 to 240 VAC)**
    Connect the DHD Controller to power here.

2.6 VX-44d/-55d Remote Control Unit

Figure 2-6 shows the VX-44d/-55d remote control, and the paragraphs that follow describe its functionality.

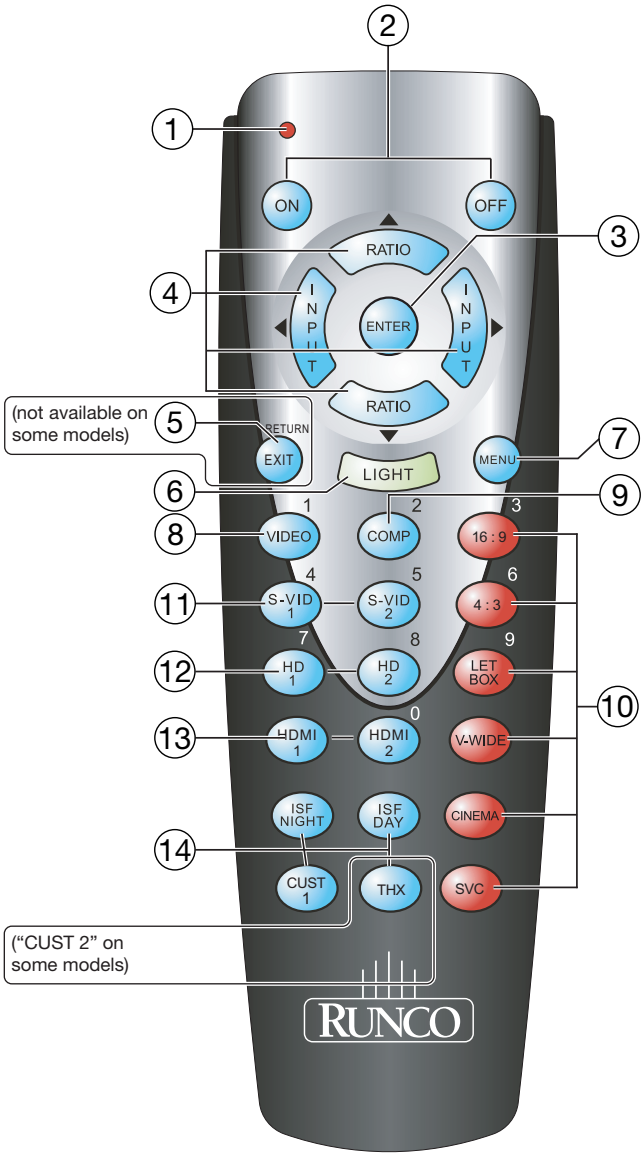

Figure 2-6. DHD Controller/VX-44d/-55d Remote Control

1. **IR OUTPUT INDICATOR**
   Lights when a button is pressed to indicate that an IR signal is being transmitted.
2. **ON / OFF**
   Press to turn the projector on or off.
3. **ENTER**
   Press to select a highlighted menu item or confirm a changed setting.
4. **Cursor Buttons (▲, ◀, ▼, ▶)**
   Use these buttons to select items or settings, adjust settings or switch display patterns.

   When no menu is present on-screen, the **UP** and **DOWN** buttons toggle through the available aspect ratios, in this order:
   UP Button = Native - Virtual Cinema - Cinema - VirtualWide - Letterbox - 4:3 - 16:9
   DOWN Button = 16:9 - 4:3 - Letterbox - VirtualWide - Cinema - Virtual Cinema - Native

   Note *Virtual Cinema is available only on the VX-44d/-55d/CineWide. For more information about aspect ratios, refer to Table 4-1.*

   Likewise, the **LEFT** and **RIGHT** buttons toggle through the different source inputs, in this order:
   LEFT Button = HDMI 2 - HDMI 1 - SCART - HD 2 - HD 1 - Component - S-Video 2 - S-Video 1 - Composite Video
   RIGHT Button = Composite Video - S-Video 1 - S-Video 2 - Component - HD 1 - HD 2 - SCART - HDMI 1 - HDMI 2
5. **RETURN / EXIT**
   Press this button to exit the current menu and return to the previous one.

   Note *Not all remote control units have this button. If yours does not, use the **MENU** button (see below) to exit the current menu.*

6. **LIGHT**
   Press to illuminate the buttons.
7. **MENU**
   Press this button to access the OSD controls, or to exit the current menu and return to the previous one.
8. **VIDEO (1)**
   Press to select Composite video input as the source or to enter the numeric character “1.”
9. **COMP (Component) (2)**
   Press to select Component/SCART video input as the source or to enter the numeric character “2.”

10. **Aspect Ratio Selection Buttons**
    Use the red buttons to select an aspect ratio directly or to enter numeric characters, as follows:

    16:9 (3)
    For viewing 16:9 DVDs or HDTV programs in their native aspect ratio.

    4:3 (6)
    Scales the input signal to fit 4:3 display mode in the center of the screen.

    LETBOX (Letterbox) (9)
    For viewing LaserDisc movies or non-anamorphic DVDs on a 16:9 screen.

    V-WIDE (VirtualWide)
    Enlarges a 4:3 image horizontally in a NON-linear fashion to fit 16:9 full screen display.

    CINEMA
    For viewing 2.35:1 source material.

    SVC (CineWide-equipped projectors only)
    Selects the Virtual Cinema aspect ratio, used for viewing 16:9 source material on a 2.35:1 screen.
11. **S-VID 1 (4) / S-VID 2 (5) (S-Video)**
    Press to select an S-Video input or to enter the numeric character “4” or “5.”
12. **HD 1 (7) / HD 2 (8)**
    Press to select a HD (RGBHV or YPbPr component) input or to enter the numeric character “7” or “8.”
13. **HDMI 1 / HDMI 2 (0)**
    Press to select a Digital Video input. Press **HDMI 2** to enter the numeric character “0.”
14. **Memory Preset Buttons:**

    ISF NIGHT
    Press to recall settings for the current input from the “ISF Night” memory preset.

    ISF DAY
    Press to recall settings for the current input from the “ISF Day” memory preset.

    CUST 1
    Press to recall settings for the current input from the “Custom” memory preset.

    THX (CUST 2)
    Press to recall settings for the current input from the “THX” memory preset.

3. Installation

3.1 Remote Control

To install batteries in the remote control, press up on the battery cover retainer clip and lift off the cover. Install the two AAA batteries with the correct polarity and then replace the cover.

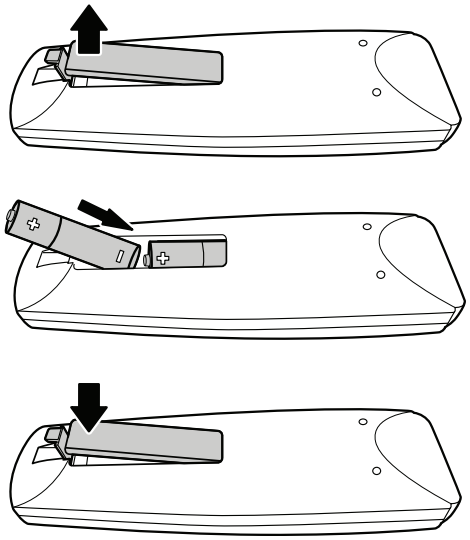

Notes on Batteries

- Make sure that the battery polarities are correct when installing the batteries.
- Do not mix an old battery with a new one or different types of batteries.
- If you will not use the remote control for a long time, remove the batteries to avoid damage from battery leakage.

Notes on Remote Control Operation

- Make sure that there is nothing obstructing the infrared beam between the remote control and the IR receiver on the DHD Controller.
- If the effective range of the remote control decreases, or it stops working, replace the batteries with new ones.
- The remote control may fail to operate if the infrared remote sensor is exposed to bright sunlight or fluorescent lighting.
- Ambient conditions may possibly impede the operation of the remote control. If this happens, point the remote control at the DHD Controller, and repeat the operation.

3.2 Quick Setup

Table 3-1 gives a quick overview of the VX-44d/-55d installation process. The sections following this one provide detailed instructions.

Note *Installation must be performed by a qualified custom video installation specialist.*

Table 3-1. Installation Overview

Step	Procedure	For Details, Refer to page...
1	Choose a location for the projector	19
2	Install primary projection lens	25
3	Install CineWide lens mounting assembly (stationary base plate or AutoScope lens motor – optional)	26
4	Mount the projector	28
5	Connect the DHD Controller to the projector	29
6	Connect signal sources to the DHD Controller	30
7	Connect external controller to RS-232 port (optional)	36
8	Connect AutoScope lens motor and/or other equipment to 12-volt trigger outputs (optional)	37
9	Apply power to the projector	39, 40
10	Primary lens adjustments: projected image size (zoom), position (shift) and focus	21, 41
11	For rear-screen and/or ceiling-mount installations, select the proper picture orientation	41
12	Install CineWide anamorphic lens (optional)	42
13	CineWide lens adjustments: position, pitch (angle), geometry and focus	43
14	Adjust lamp output and optical aperture, as needed	49
15	DHD Controller input calibration: adjust the following ***for each DHD Controller input and display mode (resolution/frame rate)***; save settings when finished: • Aspect ratio • Color level • Brightness • Tint • Contrast • Input position • Color temperature and white balance	55 through 69

3.3 Installation Considerations

Proper installation of your projector will ensure the quality of your display. Whether you are installing a projector temporarily or permanently, you should take the following into account to ensure your projector performs optimally.

➤ *Installation Type*

Choose the installation type that best suits your needs: front or rear screen, floor mount or inverted mount. Table 3-2 compares these various installation methods.

Table 3-2. Projector Installation Options

Advantages	Considerations
Front Screen, Floor Mount Installation	
• Easy to set up • Can be moved or changed quickly • Easy to access	• Shares floor space with audience
Front Screen, Inverted Mount (ceiling) Installation	
• Does not take up audience space • Projector is unobtrusive • Projector cannot be accidentally moved	• Installation is more permanent • Projector access is more difficult
Rear Screen, Floor Mount Installation	
• Projector is completely hidden • Projector is easily accessed • Usually good ambient light rejection	• Requires separate room • Installation cost is usually higher
Rear Screen, Inverted Mount (ceiling) Installation	
• Projector is completely hidden • Usually good ambient light rejection	• Requires separate room • Installation cost is usually higher
Rear Screen, Floor Mount with Mirror	
• Projector is completely hidden • Usually good ambient light rejection • Requires less space behind screen than other rear screen installations	• Requires separate room • Installation cost is usually higher

➤ *Ambient Light*

In general, minimize or eliminate light sources directed at the screen. Contrast ratio in your images will be noticeably reduced if light directly strikes the screen, such as when a shaft of light from a window or floodlight falls on the image. Images may then appear washed out and less vibrant.

Throw Distance ➤

Throw distance is the distance measured from the front of the projector to the screen. This is an important calculation in any projector installation as it determines whether or not you have enough room to install your projector with a desired screen size and if your image will be the right size for your screen.

You can quickly estimate the throw distance by taking the width of the screen and multiplying it by the lens throw ratio; see Figure 3-1. The result of this calculation tells you roughly how far back the projector should be positioned from the screen in order to project a focused image large enough to fill the screen.

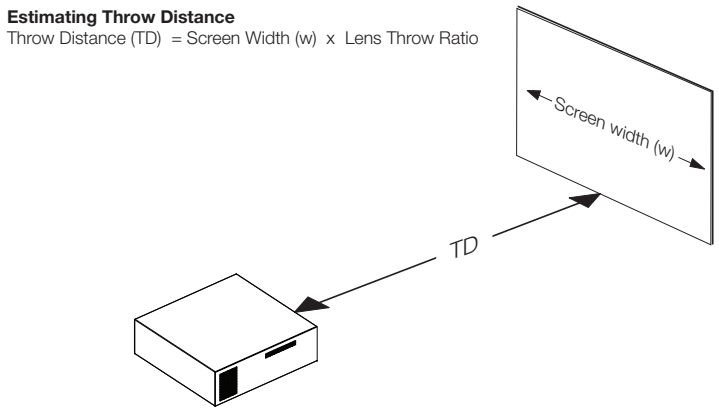

Figure 3-1. Estimating Throw Distance

Table 3-3 lists the available lens options for the VX-44d/-55d and their associated throw ratios.

Table 3-3. VX-44d/-55d Lens Options and Throw Ratios

Lens Option (Note 2)	Throw Ratio with Primary Lens Only	Throw Range in inches, with 96x54-inch (1.78:1) Screen		Throw Ratio with Primary Lens and Anamorphic Lens	Throw Range in inches, with 126.9x54-inch (2.35:1) Screen	
		Minimum	Maximum		Minimum	Maximum
Telesto B	1.37 - 1.64	131.52	157.44	Not Applicable (Note 2)		
Telesto C	1.69 - 2.27	162.24	217.92			
Telesto D	2.38 - 4.00	228.48	384.00	1.79 - 3.09	227.15	392.12
Telesto E	4.18 - 6.60	401.28	633.60	3.18 - 5.06	403.54	642.11

Notes:

1. Throw distance does not affect image quality, provided these ranges are taken into account.

2. Only the Telesto D and E lenses can be used with the optional CineWide (secondary anamorphic) lens. Doing so affects the throw distances as shown here.

➤ *Vertical and Horizontal Position*

Proper placement of the projector relative to the screen will yield a rectangular, perfectly-centered image that completely fills the screen.

Ideally, the projector should be positioned perpendicular to the screen and in such a way that the lens center is aligned with either the top or bottom edge of the screen area, and centered horizontally. See Figure 3-2.

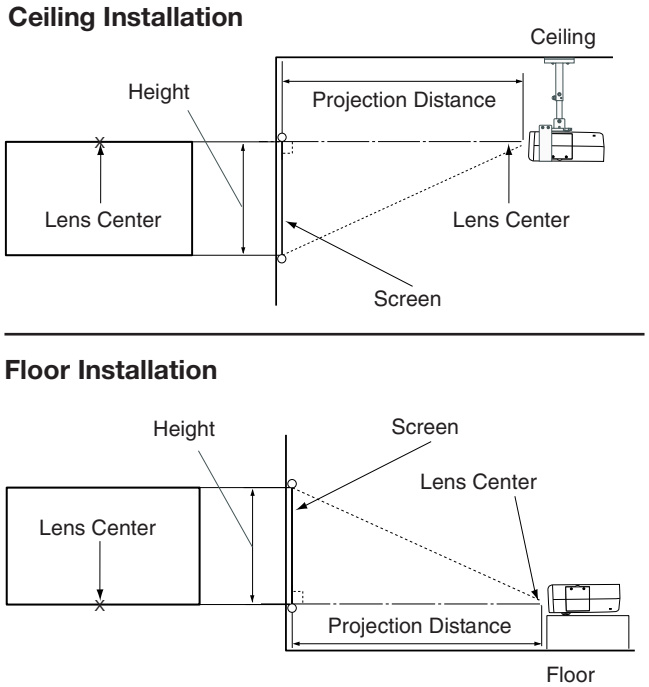

Figure 3-2. Projector Placement

➤ *Vertical and Horizontal Lens Shift*

If it is not possible to align the projector and screen as shown in Figure 3-2, you can use the lens shift controls to center the image on the screen. Lens shift is generally expressed as a percentage of the screen height or width, as shown in Figure 3-3 and Figure 3-4.

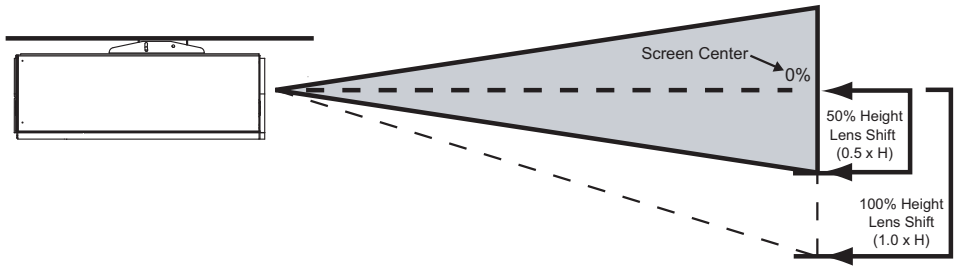

Note: *This is a general example of lens shift. Lenses vary in their shift capabilities.* ***No particular lens or projector is used in this example.***

Figure 3-3. Vertical Lens Shift (EXAMPLE ONLY)

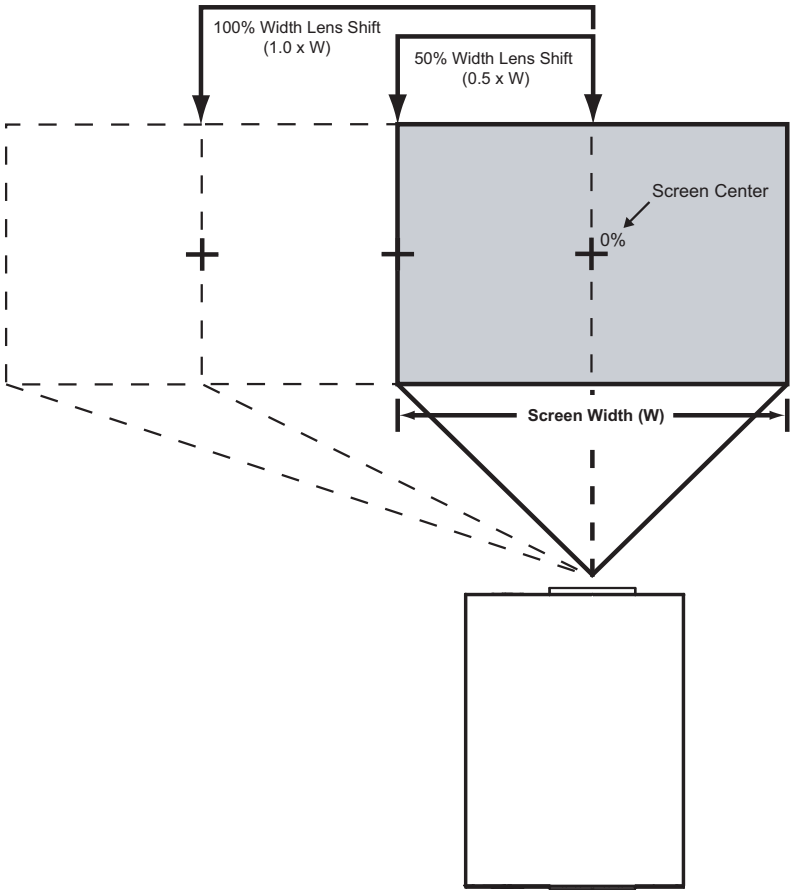

Note: *This is a general example of lens shift. Lenses vary in their shift capabilities.* ***No particular lens or projector is used in this example.***

Figure 3-4. Horizontal Lens Shift (EXAMPLE ONLY)

Table 3-4 lists the lens shift limits for each available VX-44d/-55d lens, as percentages and absolute measurements with a 100 x 56 inch (1.78:1) screen.

Table 3-4. Vertical and Horizontal Lens Shift Limits

		Lens Option		
		Telesto B or Telesto C	**Telesto D**	**Telesto E**
Lens Shift Limits, as Percentages of Screen Height or Width (Notes 1, 2 and 3)				
Vertical (Notes 2 and 3)	Up	60%	60%	60%
	Down	60%	60%	60%
Horizontal (Note 2)	Left	22%	20%	21%
	Right	22%	20%	21%
Lens Shift Limits in Inches, with a 100-by-56 inch (1.78:1) Screen				
Vertical	Up	33.60	33.60	33.60
	Down	33.60	33.60	33.60
Horizontal	Left	22.00	20.00	21.00
	Right	22.00	20.00	21.00

Notes:

1. *With no vertical or horizontal lens shift, the lens center and screen center are aligned with each other.*
2. *Vertical shift limits are percentages of the screen height. Horizontal shift limits are percentages of the screen width.*
3. ***Vertical lens shift figures are for ceiling mount configurations.*** *For floor installations (where the projector is upright), reverse the up/down vertical lens shift percentages.*

Folded Optics ➤ In rear screen applications where space behind the projector is limited, a mirror may be used to fold the optical path, as shown in Figure 3-5. The position of the projector and mirror must be accurately set. If you are considering this type of installation, contact your dealer for assistance.

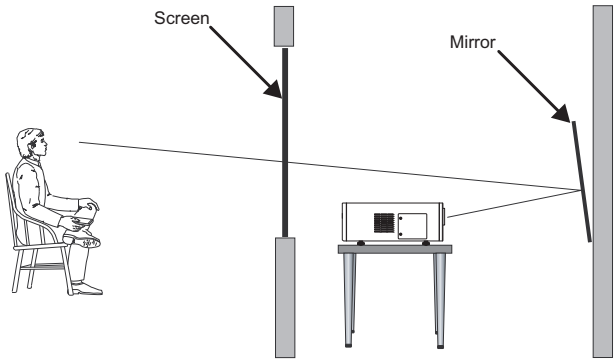

Figure 3-5. Folded Optics

Audio/Video Synchronization Issues ➤ Due to its extraordinarily high level of video processing performance, the DHD Controller may distribute video signals with a perceptible level of audio latency. In order to easily solve this issue, Runco recommends using the DHD Controller with a high-quality audio receiver that has the ability to effectively synchronize audio and video signals.

Most mainstream audio receiver/switchers have the ability to synchronize the audio and video to the Advanced Television Systems Committee (ATSC) prescribed tolerances. According to the ATSC, the sound program should never lead the video program by more than 15 milliseconds, and should never lag behind the video program by more than 45 milliseconds.

In addition, many A/V receivers introduce additional latency that needs to be compensated for during the installation. Table 3-5 shows the amount of possible audio latency given different signal input timings.

Table 3-5. Possible Audio Latency for Various Input/Output Timings

Input Timing	Possible Audio Latency (milliseconds)
480i	133
480p	83
576i	160
576p	100
720p/50	100
720p/60	83
1080i/25	160
1080i/30	133
1080p/24	125
1080p/50	80
1080p/60	67

➤ *Other Considerations*

Other considerations and tips that can help improve your installation:

- Keep the ambient temperature constant and below 35°C (95°F). Keep the projector away from heating and/or air conditioning vents. Changes in temperature may cause drifts in the projector circuitry, which may affect performance.
- Keep the projector away from devices that radiate electromagnetic energy such as motors and transformers. Common sources of these include slide projectors, speakers, power amplifiers and elevators.

3.4 Installing the Projection Lens

The projection lens is shipped separately from the projector. Proceed as follows to install the projection lens:

1. Remove the lens plug from the lens opening in the projector.
2. Place the lens cap on the projection lens to protect it from being damaged during the installation process.
3. Remove the rear cap from the lens. This protective cap is only used during shipping to protect the lens from damage.
4. Slide the new lens into the lens opening of the projector. Make sure to align the connector on the side of the lens with the connector assembly on the lens retaining ring; see Figure 3-6.

   As you connect the lens, you may have to re-align it slightly until the tabs on the lens fit into the slots in the lens retaining ring.

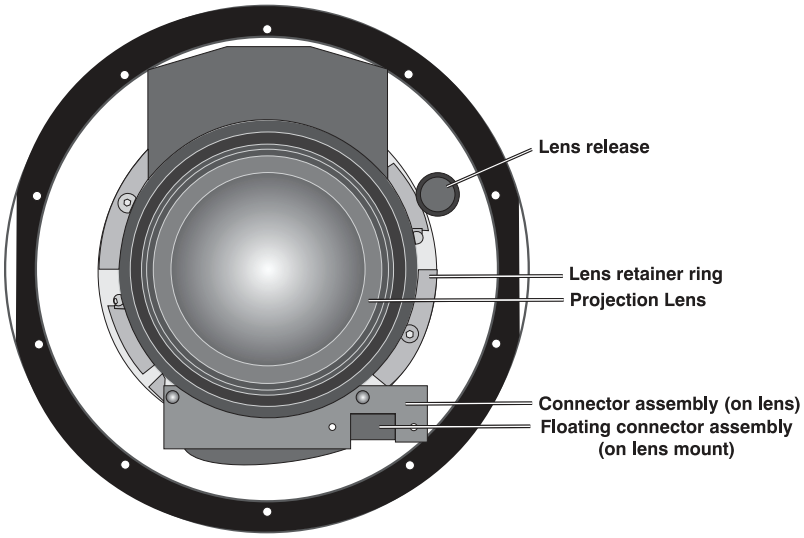

Figure 3-6. Lens Assembly (Front View)

5. With the lens fully inserted (and connected), turn it clockwise until the lens release button “pops” indicating the lens is fully inserted.

3.5 Installing the Optional CineWide Lens Mount

If you are installing a VX-44d/-55d with the optional CineWide or CineWide with AutoScope system, proceed as follows to install the anamorphic lens mounting assembly (stationary base plate or AutoScope lens motor).

Note

1. *Do not install the CineWide lens yet, only the mounting plate or lens motor. You will install the CineWide lens after you install the projector and adjust the primary lens.*
2. *Some of the following steps are necessary only for CineWide with AutoScope installations.*

Remove Projector Front Feet (CineWide with AutoScope) ➤

(Skip this step if you are installing a fixed CineWide anamorphic lens.)

Place the projector upside down on a blanket or other soft surface. Loosen and remove the two front feet on the projector.

Install Anamorphic Lens Motor (CineWide with AutoScope) or Base Plate (fixed CineWide) ➤

Note

The anamorphic lens mounting kit is partially pre-assembled at the factory – the AutoScope lens motor and lens mounting assemblies are both fully assembled.

CineWide with AutoScope: Line up the eight mounting holes on the lens motor housing with those on the bottom of the projector.

Secure the motor to the projector with the eight screws provided for this purpose.

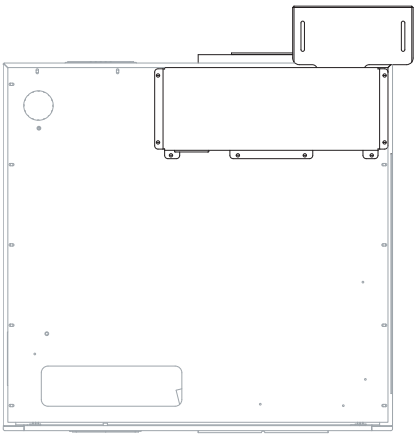

Fixed CineWide: Line up the seven mounting holes on the lens mount base plate with those on the bottom of the projector, directly below the primary lens. Secure the base plate to the projector with the screws provided for this purpose.

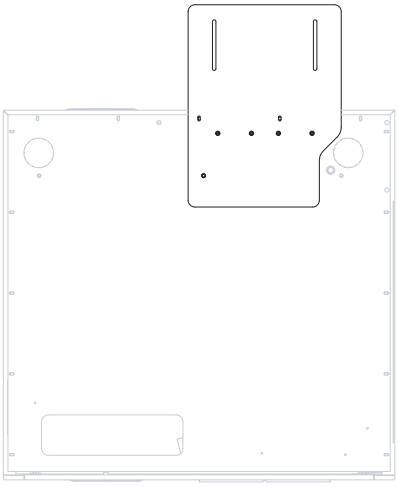

Caution *DO NOT OVER-TIGHTEN THE SCREWS.*

➤ *Install Projector Stand (CineWide with AutoScope, Floor-Mount)*

(Skip this step if you are installing a fixed CineWide anamorphic lens, or ceiling-mounting an AutoScope-equipped projector.)

If you are installing the VX-44d/-55d in an upright position (not ceiling-mounted), use the supplied hardware to attach the projector stand to the bottom of the projector as shown below. This stand allows the projector to lie flat on the mounting surface with the AutoScope lens motor installed.

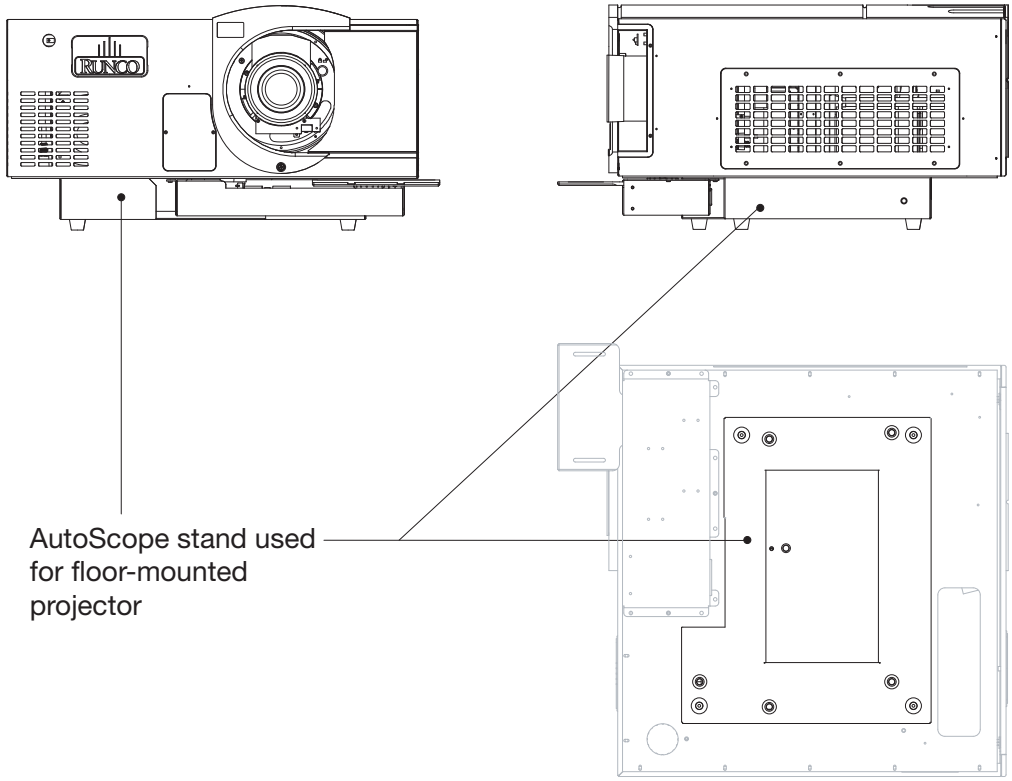

3.6 Mounting the VX-44d/-55d

There are several methods for mounting the projector. Depending on your chosen installation, one method may be more suitable than another.

Floor Mounting (Upright) ➤ In typical front and rear screen installations, the projector can be mounted to a secure and level surface such as a table or cart. Carts are useful when moving a projector during a presentation or from site to site. If possible, lock the wheels when it's in position to prevent it from being moved during a presentation.

Ceiling Mounting (Inverted) ➤ For fixed installations, and for those that want the projector out of sight or have a limited space for projector and audience, you can invert the VX-44d/-55d and suspend it from the ceiling using a specially-designed ceiling mount fixture.

Note *Use only the Runco-approved ceiling mount kit designed for your projector. Install the mount kit according to the instructions provided with it.*

The projector can also be inverted and placed in an enclosure above and behind the viewing area. Install four feet on the inside bottom surface of the enclosure on which the projector can rest. A variety of materials can be used for this purpose (for example, rubber crutch tips or turntable feet).

Adjusting the Projection Angle ➤ If the VX-44d/-55d is ceiling-mounted and the screen is significantly lower than the projector, you can tilt the projector at an angle by adjusting the ceiling mount.

The projector can be rotated (front-to-back) up to 360 degrees and mounted without it affecting performance. However, to ensure optimal performance of the lamp, limit the side-to-side tilt of the projector to ±15 degrees; see Figure 3-7.

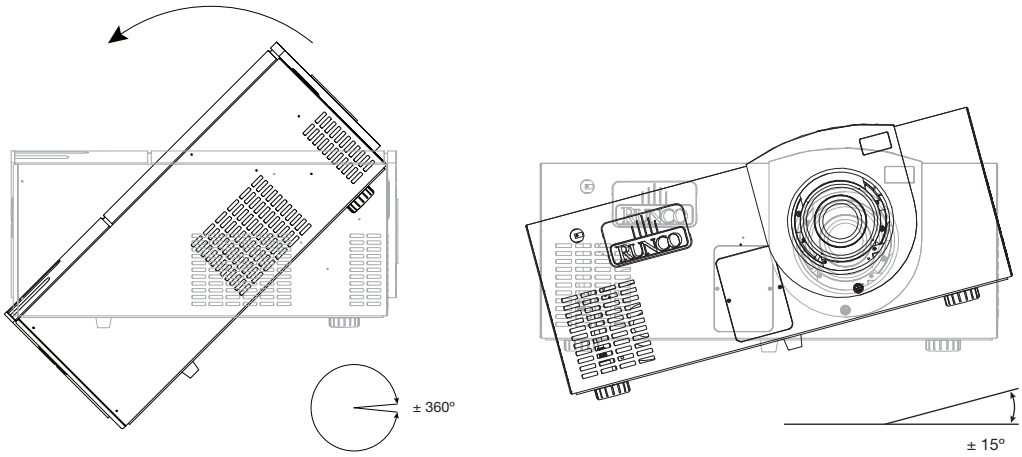

Figure 3-7. Mounting Angle Ranges (Front-to-Back and Side-to-Side)

For a floor (non-AutoScope) installation, turn the two adjustable feet on the bottom of the projector to adjust the projection angle.

If you do either of these things, you may need to make keystone adjustments or vertically shift the image using the on-screen display (OSD) controls, to compensate. For detailed instructions, refer to ***Using the On-Screen Menus*** on page 53.

3.7 Connections to the VX-44d/-55d and DHD Controller

Proceed as follows to connect the DHD Controller to the VX-44d/-55d, your video sources, external controller(s) – if present – and AC power.

When connecting your equipment:

- Turn off all equipment before making any connections.
- Use the correct signal cables for each source.
- Ensure that the cables are securely connected. Tighten the thumbscrews on connectors that have them.

To access the connector panel, pull firmly on the cable access cover to open it.

◄ ***Connector Panel Access***

Digital Video Connection: Connect the HDMI Output of the DHD Controller to **INPUT 2 (DVI)** of the VX-44d/-55d as shown in Figure 3-8.

◄ ***Connecting the DHD Controller to the VX-44d/-55d***

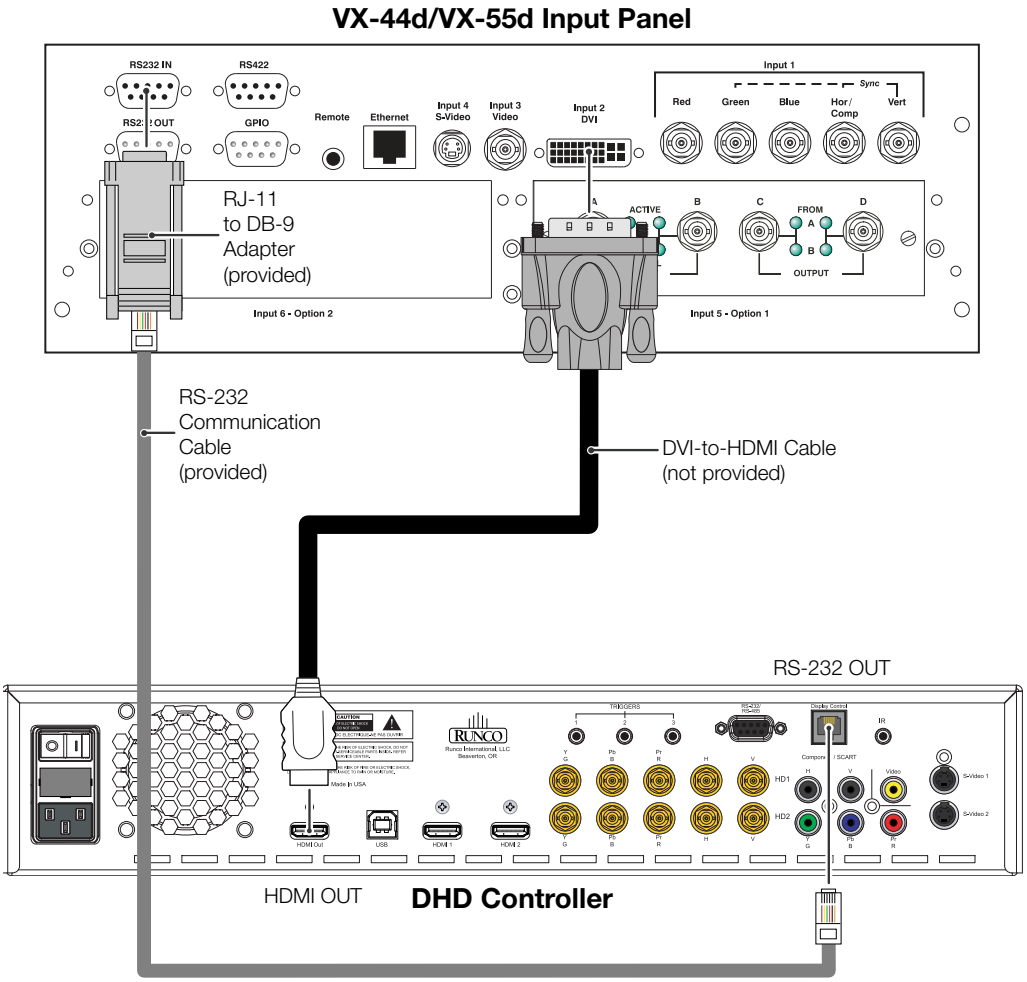

Figure 3-8. Connecting the VX-44d/-55d to the DHD Controller

RS-232 Connection: Connect the **Display Control** output from the DHD Controller to the **RS-232** input on the VX-44d/-55d. Use a standard, modular telephone cable with RJ11 plugs at both ends. On the VX-44d/-55d end, use the provided RJ11-to-DB9 adapter. This adapter is wired as shown in Figure 3-9.

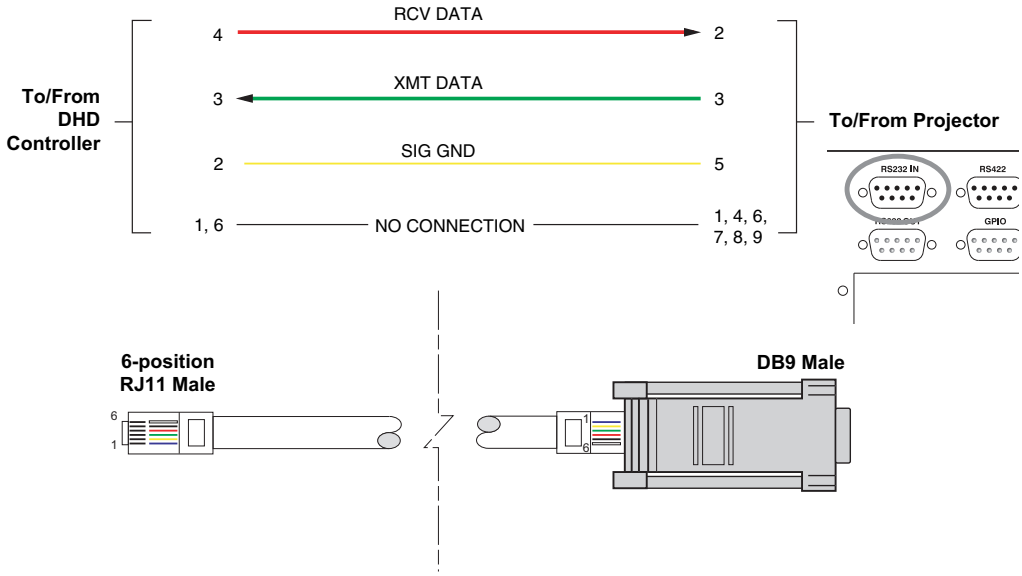

Figure 3-9. RS-232 Connection from the DHD Controller to the VX-44d/-55d

Connecting Source Components to the DHD Controller

Connect your video sources to the DHD Controller as shown and described in the sections that follow.

HDMI Source Connections: See Figure 3-10.

Tip

Use the HDMI inputs whenever possible. This ensures the highest video quality because the signal is carried in the digital domain throughout the entire signal path, from source component output into the projector.

Note

*You can also connect computers with DVI output to these inputs. Refer to **Supported Timings** on page 99 for a list of compatible input signals.*

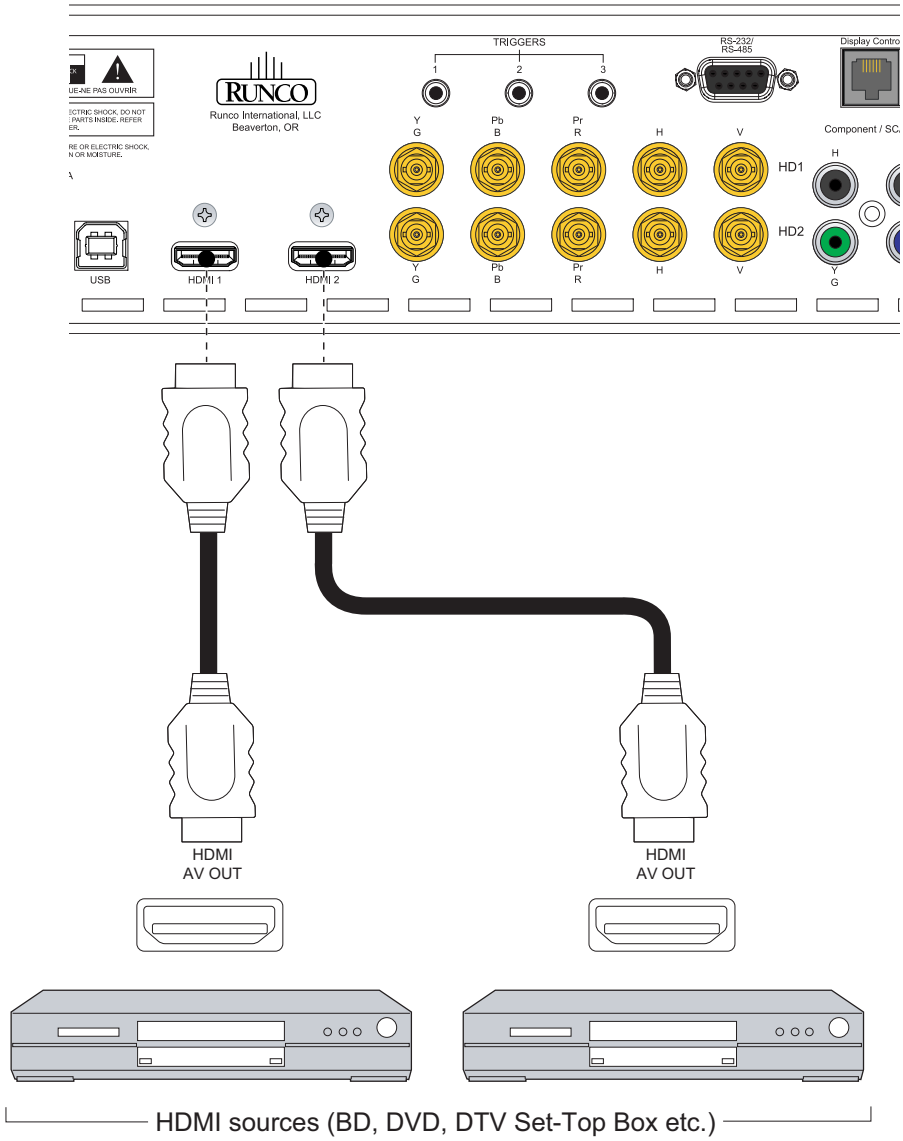

Figure 3-10. HDMI Source Connections

Component Video Source Connections: Connect your component video sources to the HD1, HD2 and/or Component/SCART inputs as shown in Figure 3-11.

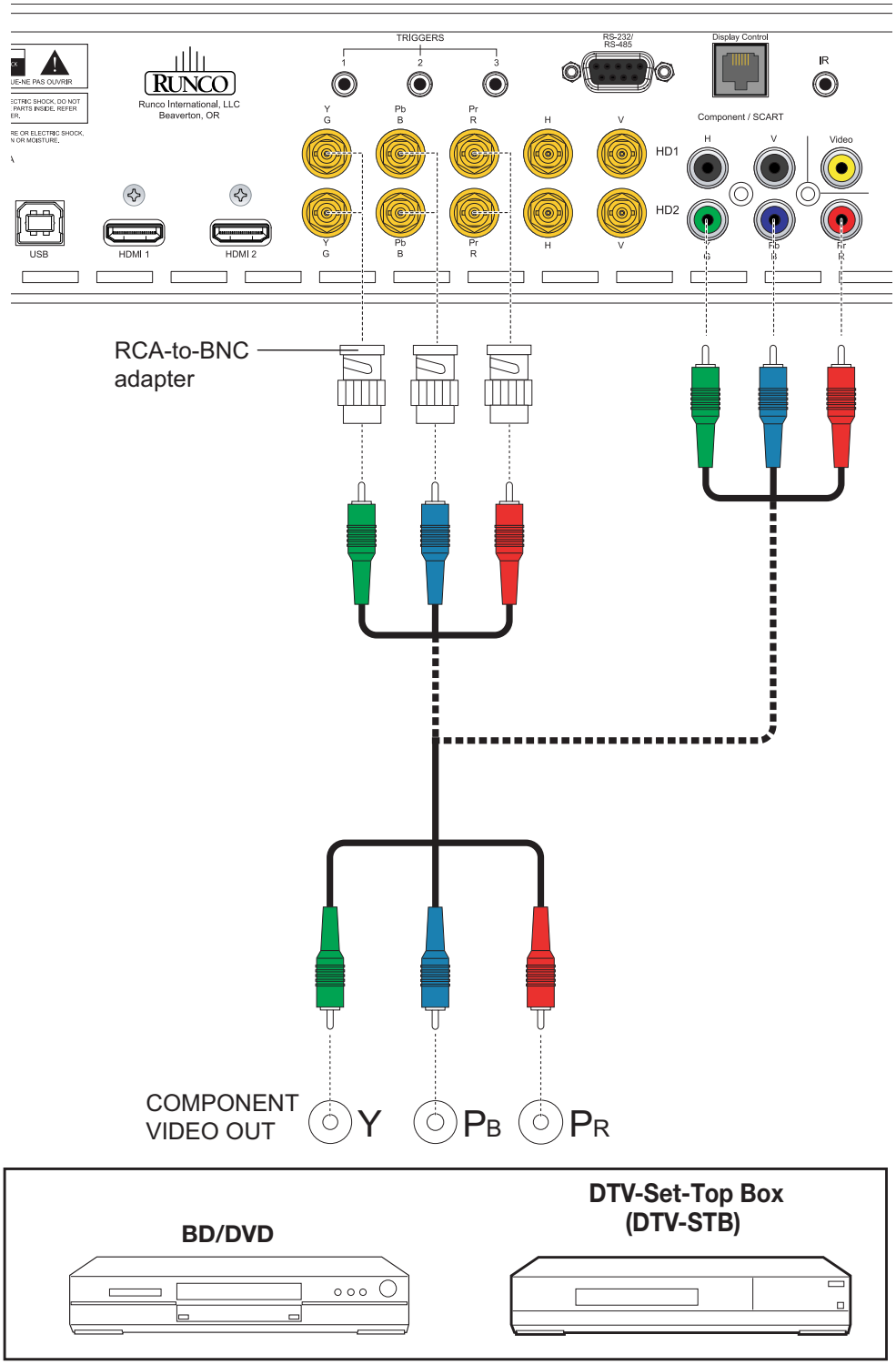

Figure 3-11. Component Video Source Connections

RGBHV Source Connections: Connect personal computers and/or other RGB sources to the HD1, HD2 and/or Component/SCART inputs as shown in Figure 3-12.

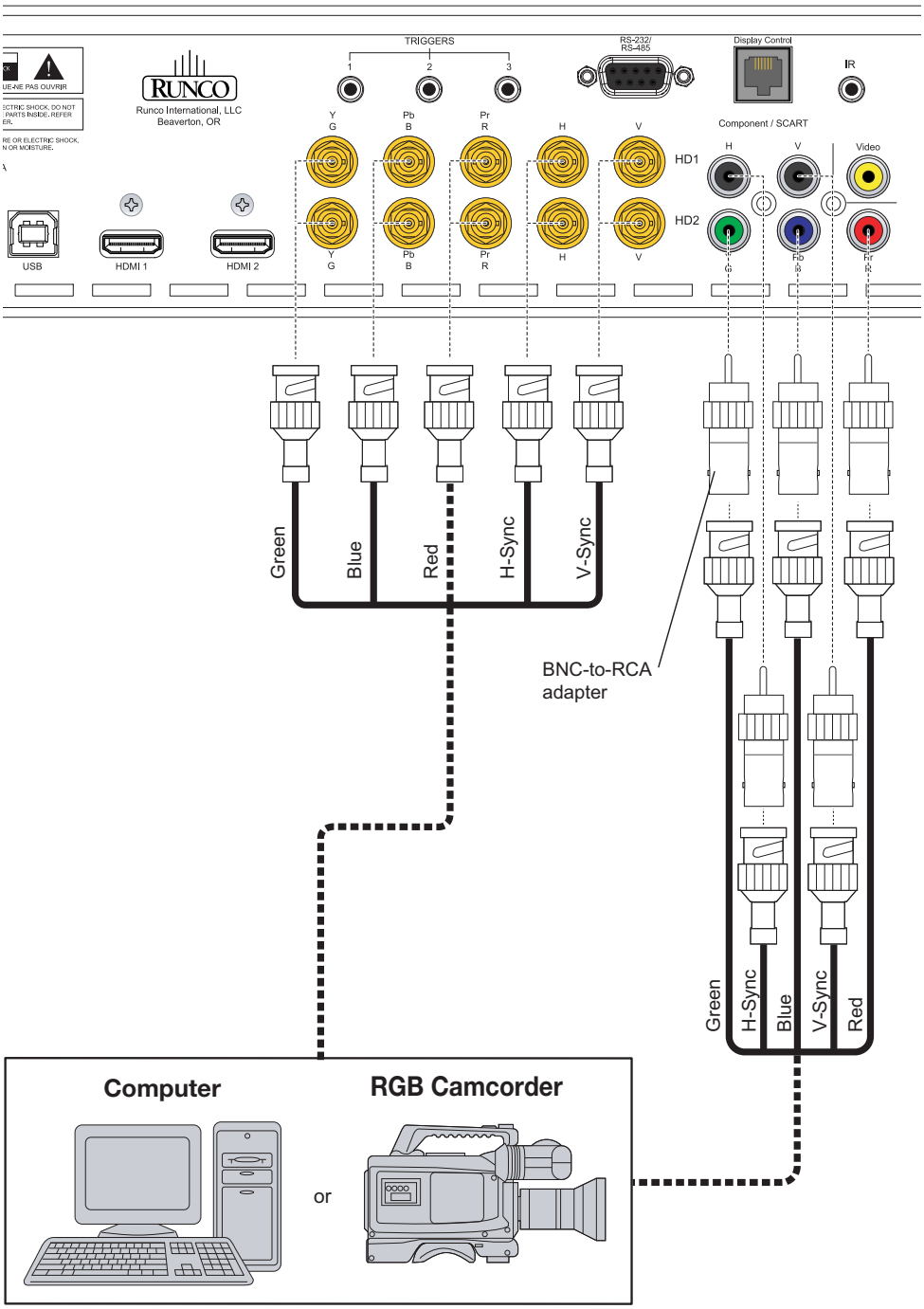

Figure 3-12. RGBHV Source Connections

SCART RGBS Source Connections: Connect the green, blue and red outputs from your SCART source to the Component/SCART input on the DHD Controller. Connect the sync output from your SCART source to the Video input on the DHD Controller. See Figure 3-13.

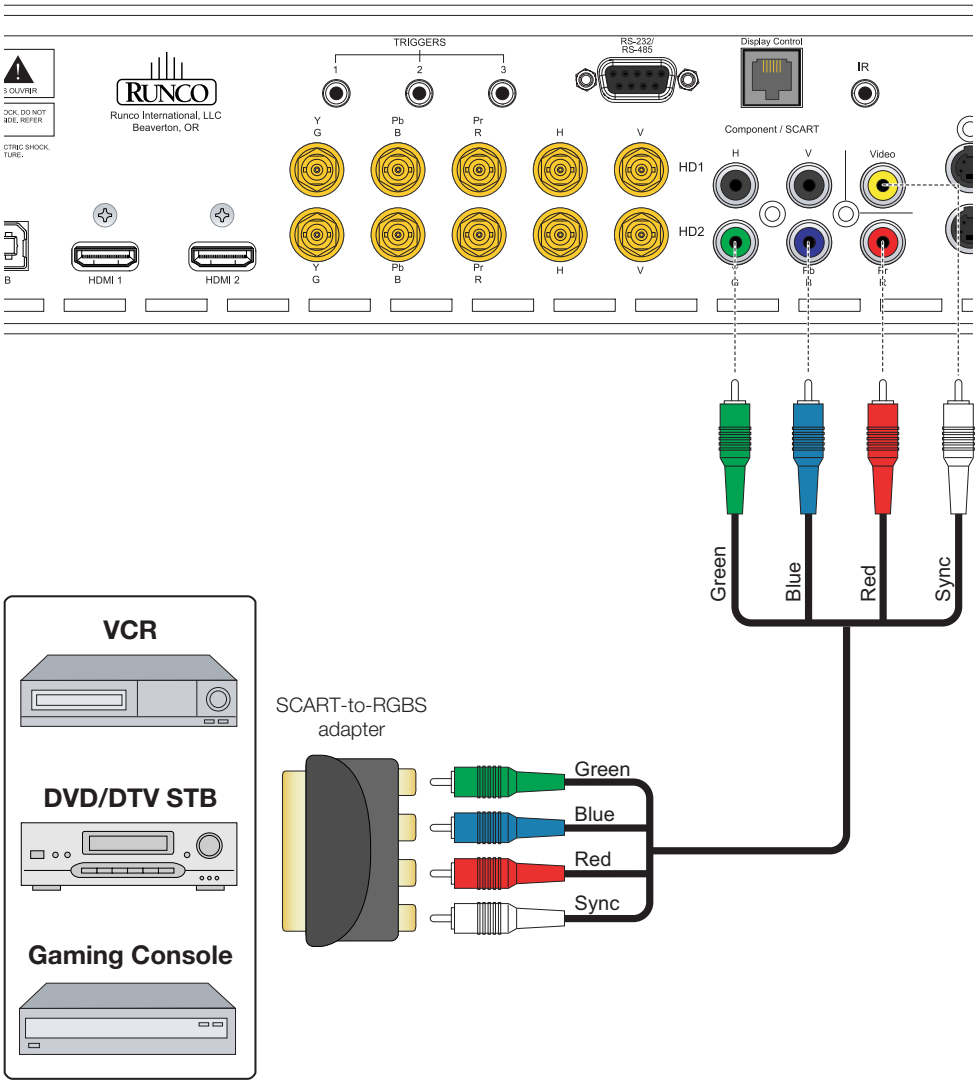

Figure 3-13. SCART RGBS Source Connections

Composite and S-Video Source Connections: See Figure 3-14.

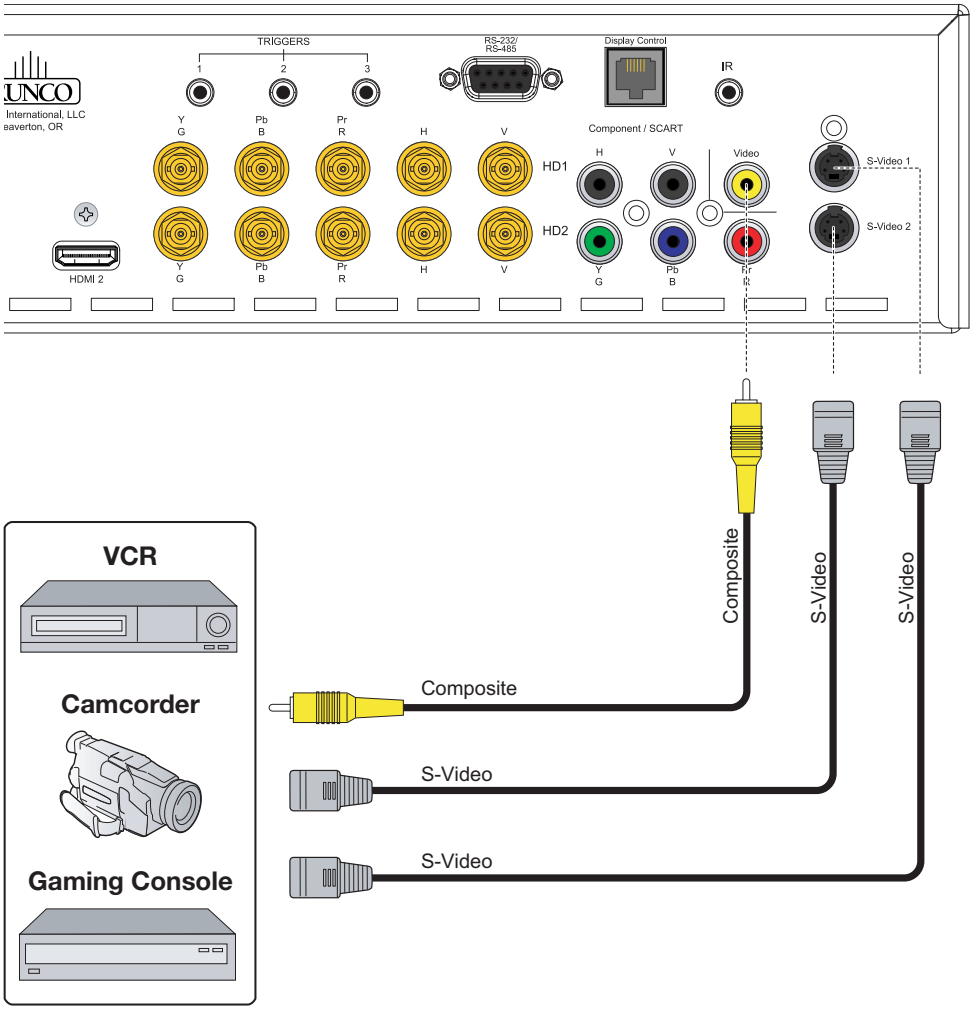

Figure 3-14. S-Video and Composite Video Source Connections

RS-232 Controller Connection ➤ Use a straight-through, 9-pin RS-232 cable to connect a PC or control/automation system (if present) to the RS-232 port on the DHD Controller; see Figure 3-15.

For more information about using this connection, refer to ***External Control*** on page 87.

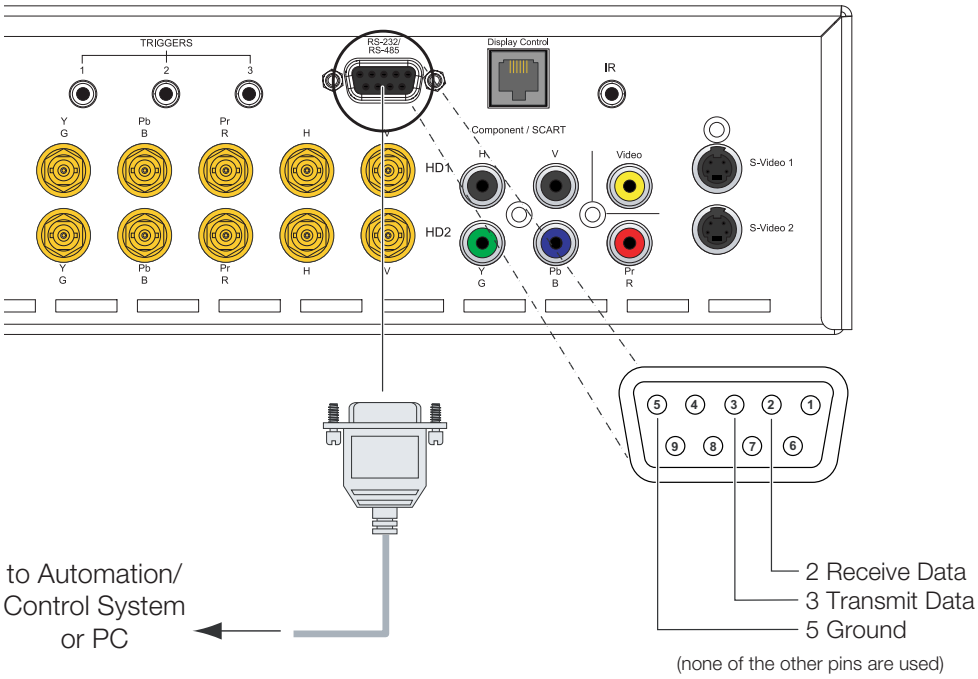

Figure 3-15. RS-232 Control System Connection

➤ *Connecting 12-volt Trigger Outputs to External Equipment*

If your VX-44d/-55d is equipped with a CineWide with AutoScope system, connect the AutoScope lens motor to a 12-volt trigger output on the DHD Controller; see Figure 3-16.

Similarly connect other 12-volt trigger-activated equipment (such as retractable screens or screen masks) to the other trigger outputs.

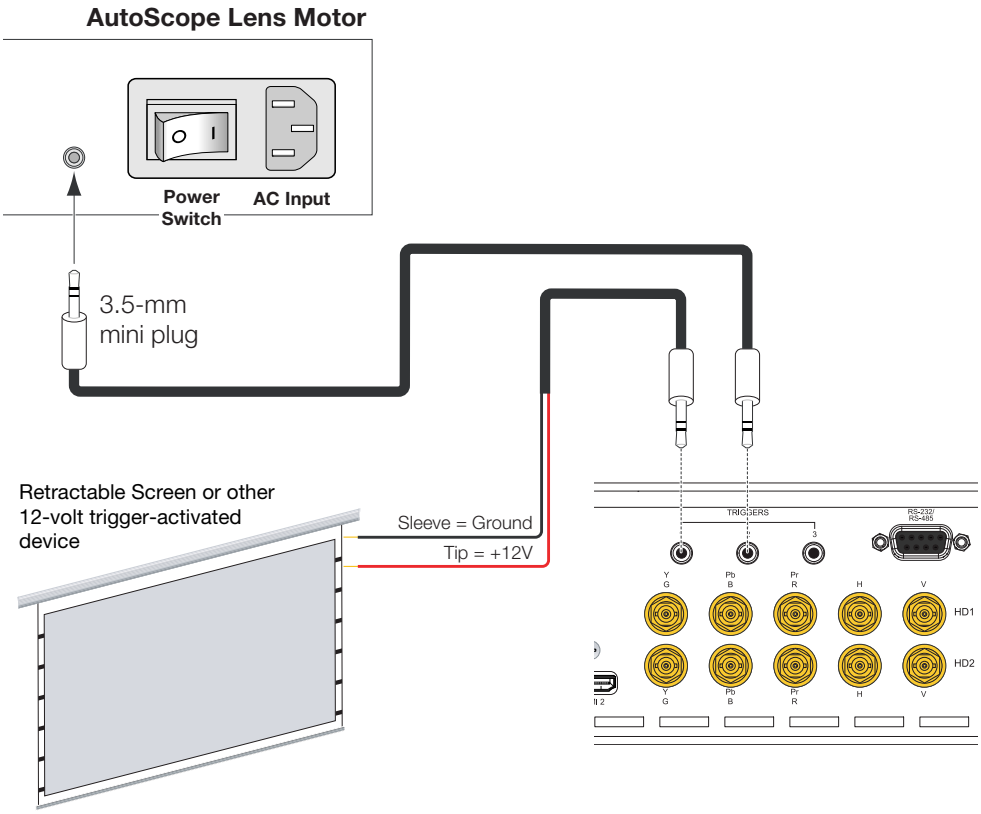

Figure 3-16. Connecting 12-volt Trigger Outputs

Connecting an External IR Receiver to the DHD Controller

If infrared signals from the remote control cannot reach the DHD Controller due to excessive distance or obstructions such as walls or cabinet doors, you can connect an external IR receiver to the DHD Controller to extend the range of the remote control. See Figure 3-17.

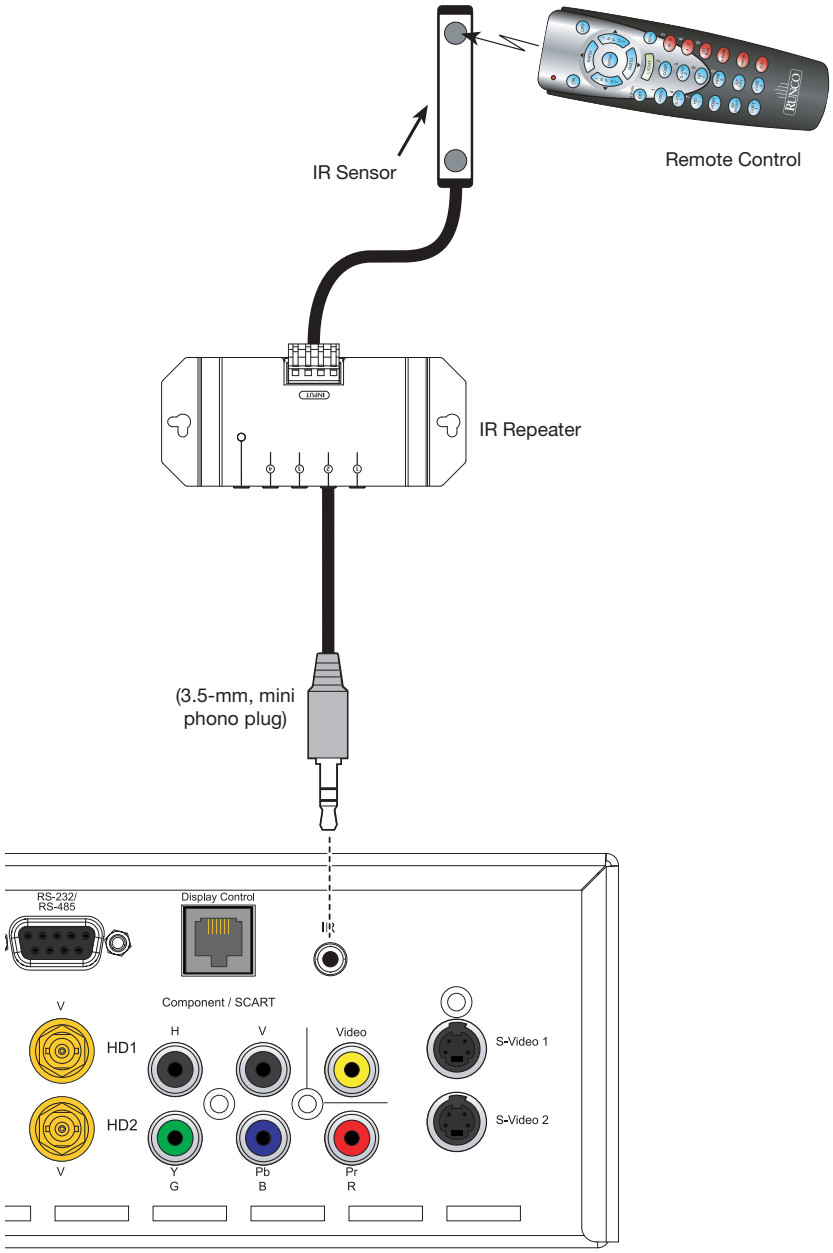

Figure 3-17. External IR Receiver Connection

➤ Connecting to AC Power

The VX-44d/-55d system includes two (2) AC power cords (one each for the DHD Controller and projector).

DHD Controller: Plug the female end of one power cord into the AC receptacle on the rear of the DHD Controller. Connect the other end to your AC power source (100 to 240 VAC).

Projector: Similarly connect the VX-44d/-55d to a nearby AC outlet. The input voltage to a VX-44d must be between 100 and 240 VAC. The input voltage to a VX-55d must be between 200 and 240 VAC.

The LED status window displays an active pattern of segments to indicate the projector is changing its state from powered down to powered up. “--” appears in the display when the projector is ready to be turned on.

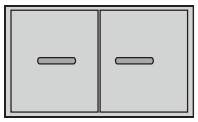

AutoScope Lens Motor: With AutoScope-equipped projectors, a third power cord is provided for the lens motor. Plug the female end of the AC power cord into the AC receptacle on the rear of the lens motor assembly. Connect the other end to a 110 VAC power source.

Caution

The input voltage to the AutoScope lens motor must be between 100 and 120 VAC. ***Do not connect the AutoScope lens motor to a 200-240 VAC power source!***

3.8 Turning on the Power

1. Turn on your source components.
2. Turn on the main power switch at the rear of the DHD Controller.
3. If this is an AutoScope-equipped projector, turn on the main power switch at the rear of the AutoScope lens motor. The lens motor power switch is located next to the AC input (see Figure 3-16).
4. Press the **ON** button on the remote control – or the **POWER** button on the DHD Controller front panel – to turn on the system. The vacuum fluorescent display on the DHD Controller front panel briefly displays “Initializing System,” followed by “Starting VX-44d/-55d.”

   The LED status window at the rear of the projector displays an active pattern of segments to indicate that it is changing its state from “standby” to “on.”
5. When the projector has completed its initialization and is ready for use, “On” appears in the projector LED status window.

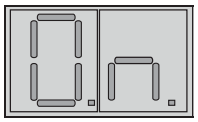

   The fluorescent display on the DHD Controller indicates the active source, input resolution/frame rate and aspect ratio; for example:

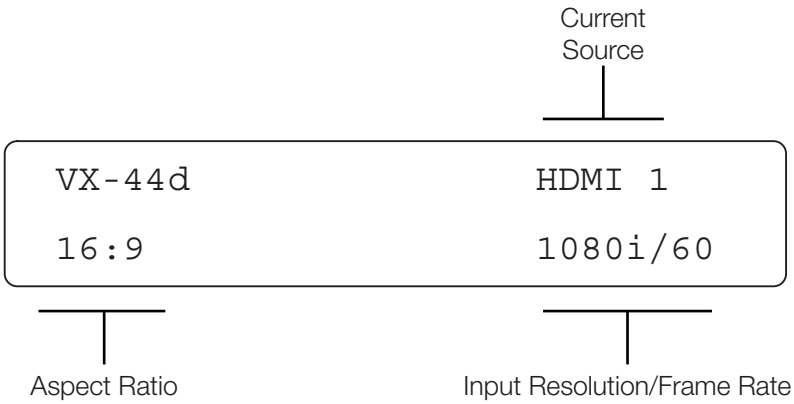

3.9 Primary Lens Adjustments

To access the motorized primary lens controls:

1. Press **MENU** on the remote control or DHD Controller front panel.
2. Select **Service** from the Main Menu and enter the Service Menu passcode.
3. Select **Display Device** from the Service Menu.
4. Select **Configure** from the Display Device menu, then select **Lens**.

The Lens menu gives you a great deal of control over the picture size, position and focus.

For best results, use the internal 13-point test pattern on the VX-44d/-55d when making these adjustments. (You cannot access this test pattern from the DHD Controller.) This pattern provides nine screen "zones" with 13 targets.

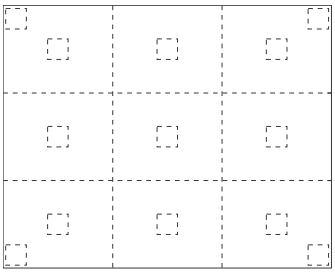

To access this test pattern:

1. **On the VX-44d/-55d built-in keypad** (see Figure 2-3), press **MENU**.
2. Press ▲ or ▼ to highlight **Installation**, then press **ENTER**.
3. Press ▲ or ▼ to highlight **Calibration and Test Patterns**, then press **ENTER**.
4. Press ▲ or ▼ to highlight **Test Pattern**, then press **ENTER**.
5. Select the **13 Point** test pattern from the pull-down list, then press **ENTER.**

To focus the projected image, use the cursor buttons to highlight "In" or "Out." Then, press and hold the **ENTER** button.

◄ ***Focus and Zoom***

To make the picture smaller (zoom out), use the cursor buttons to highlight the minus sign (-). Then, press and hold the **ENTER** button.

To enlarge the picture (zoom in), use the cursor buttons to highlight the plus sign (+). Then, press and hold the **ENTER** button.

To change the lens position, use the cursor buttons to highlight "Left," "Right," "Up" or "Down" in the Lens menu. Then, press and hold the **ENTER** button to shift the lens in that direction.

◄ ***Vertical and Horizontal Lens Shift***

When finished adjusting the lens, press **EXIT** repeatedly on the VX-44d/-55d built-in keypad to exit test pattern mode.

3.10 Adjusting the Picture Orientation

By default, the VX-44d/-55d is configured for a "floor/front" installation, in which the projector is installed upright and in front of the screen. If it is installed behind the screen and/or mounted on a ceiling, you must change the picture orientation. To do this:

1. Press **MENU** on the remote control or DHD Controller front panel.
2. Select **Service** from the Main Menu and enter the Service Menu passcode.
3. Select **Display Device** from the Service Menu.
4. Select **Configure** from the Display Device menu, then select **Installation**.
5. Select **Orientation**.
6. Choose Floor/Rear, Ceiling/Front or Ceiling/Rear, to match the installation method.

3.11 Installing and Adjusting the CineWide Anamorphic Lens

If you are installing a CineWide-equipped projector, proceed as follows to install and adjust the anamorphic lens. Note that some components shipped with your projector may differ slightly from what is shown in these instructions.

Note ***It is extremely important that the primary lens is properly adjusted before you install the anamorphic lens. Ensure that the 16:9 or 4:3 image from the primary lens is perfectly centered on the screen.***

Attach Lens Mounting Assembly to Lens Motor Carriage Plate (CineWide with AutoScope) or Base Plate (fixed CineWide)

1. Remove the two Z-Adjustment Levers and 1/4-20 Fiber Washers from the bottom of the lens mounting assembly.
2. Place the Lens Mounting Assembly on top of (or under, if the projector is inverted) the Lens Motor Carriage Plate or Base Plate, so that the two threaded posts at the bottom of the Z-Adjustment Plate pass through the corresponding slots on the carriage plate or base plate.
3. Secure the Lens Mounting Assembly to the plate with the Z-Adjustment Levers and Washers that you removed in Step 1.

Note *If this is an AutoScope installation, leave enough space between the projector and the lens mounting assembly to allow the lens to move out of the light path without the assembly coming into contact with the projector front jewelry.*

(Skip this step if you are installing a fixed CineWide anamorphic lens.)

◄ ***Configure Lens Motor Trigger (CineWide with AutoScope)***

CineWide with AutoScope maintains constant image height independent of the aspect ratio, while using the full display resolution of the projector. It accomplishes this by moving the anamorphic lens in front of the primary lens when widescreen material is being viewed. When the viewer transitions back to 16:9 or 4:3 source material, the anamorphic lens moves out of the light path.

To configure the lens motor trigger on the DHD Controller for proper AutoScope operation:

1. Press **MENU** on the remote control or DHD Controller front panel.
2. Select **Service** from the Main Menu and enter the Service Menu passcode.
3. Select **Triggers** from the Service menu.
4. Assign the trigger output to which the lens motor is connected to the Cinema and Virtual Cinema aspect ratios. This enables the lens motor to move the anamorphic lens into position (in front of the primary lens) when either aspect ratio is selected.
5. To save the trigger settings, press ▼ repeatedly to highlight “Save.” Then, press **ENTER**.
6. Select the Cinema or Virtual Cinema aspect ratio to move the anamorphic lens into position, if it isn’t already. To do this, press **CINEMA** or **SVC** on the DHD Controller remote control (Figure 2-6), or press ▲ or ▼ repeatedly with no menus visible on-screen.

Horizontal Position (X) Adjustment:

◄ ***Adjust the Anamorphic Lens***

1. Project a white field on the screen.
2. Loosen the Yaw/X-Adjustment Levers underneath the lens.
3. Slowly move the anamorphic lens into place so that there are no shadows on either side of the screen:

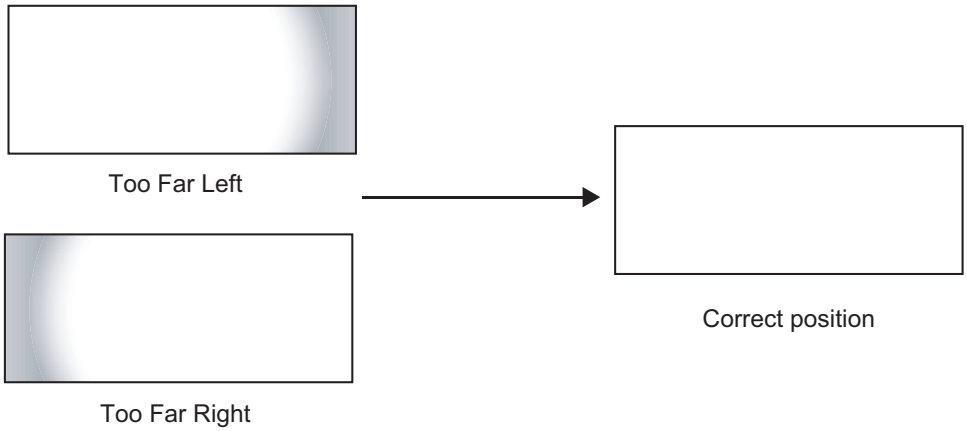

4. When the horizontal position is properly set, tighten the Yaw/X-Adjustment Levers to secure the lens in place.

Height (Y) Adjustment: With the white field still on-screen, loosen the Height Adjustment Levers on either side of the lens. Then, slowly move the anamorphic lens into place so that there are no shadows on the top or bottom of the screen:

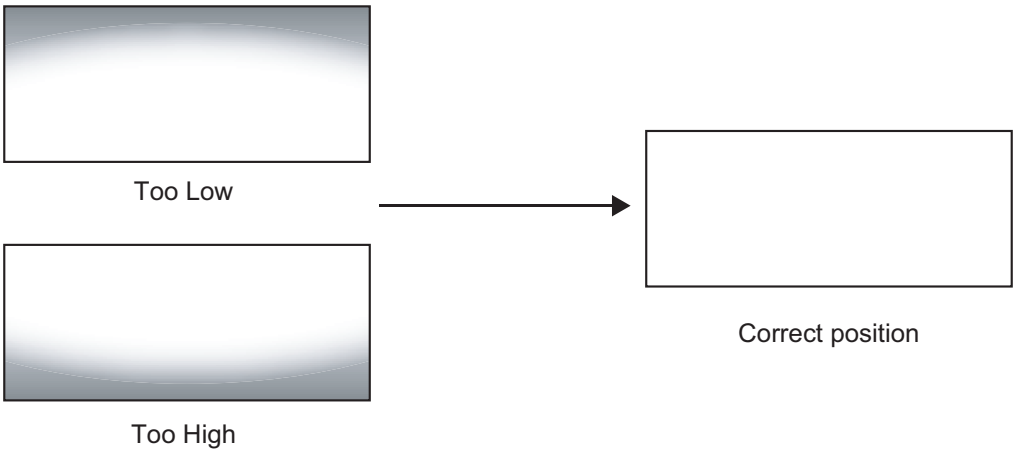

When the height is properly set, tighten the Height Adjustment Levers to secure the lens in place.

Pitch (Angle): Next, angle the lens to even out any top-to-bottom pincushion distortion. To do this, loosen the Pitch Adjustment Levers (directly above the Height Adjustment Levers) on either side of the lens to allow it to pivot freely. Then, adjust the anamorphic lens angle so that the projected image is rectangular:

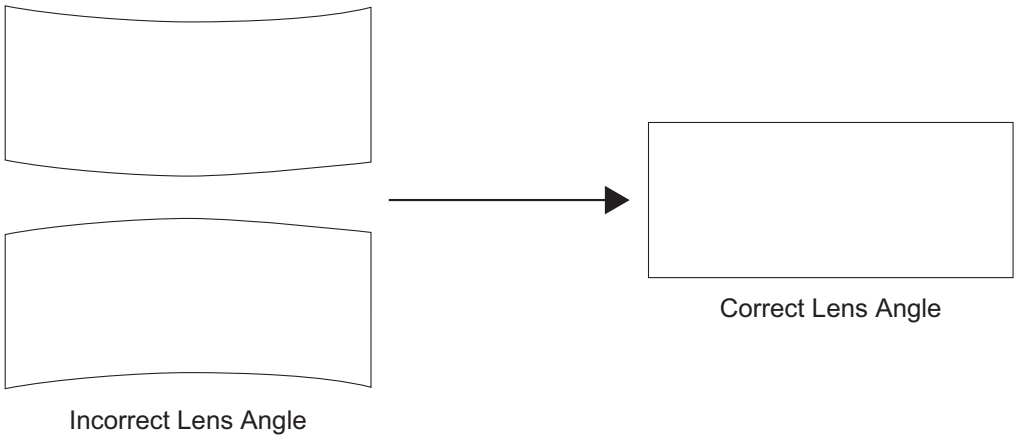

The anamorphic lens will almost always be angled with respect to the projector; this is normal.

Once the proper lens angle has been set, firmly tighten the Pitch Adjustment Levers to secure the lens in place.

Note

There may be some pincushion distortion even after the lens is properly adjusted, especially at shorter throw distances. If this is the case, Runco recommends that you slightly over-scan the image into the screen frame area to mask the distortion.

Yaw Adjust: Loosen the Yaw/X-Adjustment Levers to allow the lens to pivot freely from side to side. Then, angle the lens to even out any left-right pincushion distortion:

Anamorphic Lens (Top View)

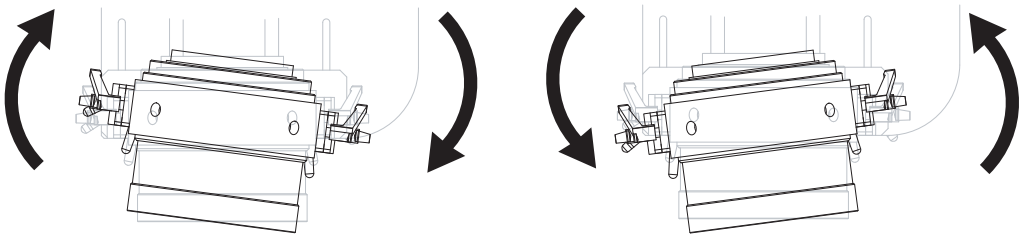

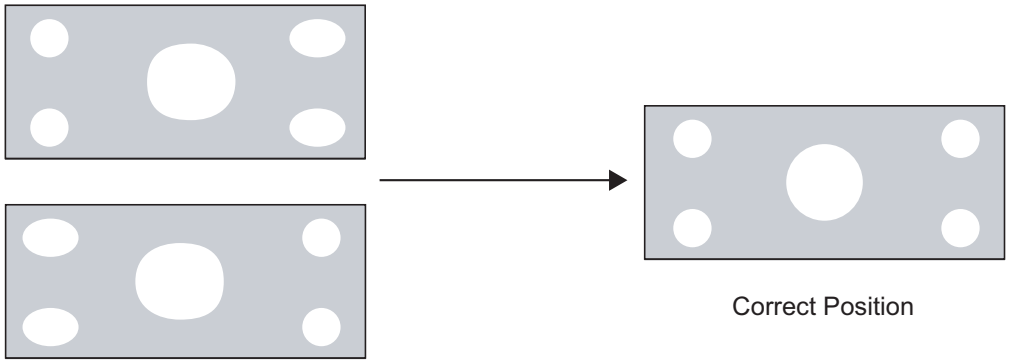

Once the proper lens angle has been set, firmly tighten the Yaw/X-Adjustment Levers to secure the lens in place.

Geometry:

1. Input an anamorphic cross-hatch test pattern to the DHD Controller.
2. Loosen the Nylon Set Screws just enough to allow the Anamorphic Lens to rotate freely.
3. Grasp the lens by the center ring and rotate the lens until the image is properly anamorphic:

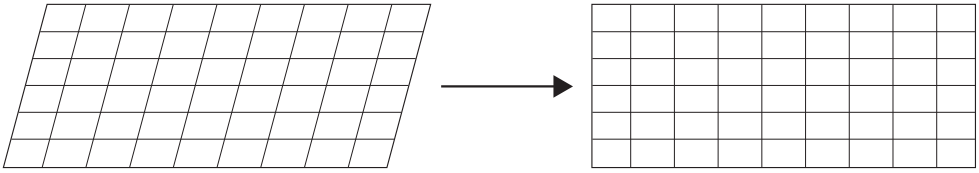

4. When the image geometry appears correct, tighten the set screws to secure the lens in place. (When viewed from the front, the rear opening on the anamorphic lens should appear as a tall, narrow oval.)

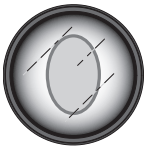

Focus: Finally, rotate the Focus Ring on the anamorphic lens to fine-tune the optical focus. When finished, hand-tighten the Focus Rotation Set Screw to lock the lens in position.

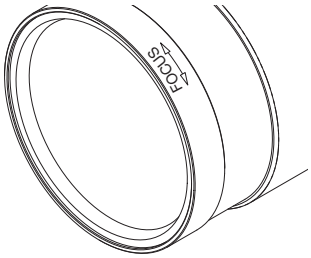

3.12 Optimizing Lamp and Lens Performance

Almost all VX-44d/-55d installation and calibration tasks can be accomplished using the DHD Controller. However, there are some adjustments that can improve the overall performance of the lamp and primary lens; these can only be done using the projector's internal menu system.

Navigating the Projector Menus ➤

There are several groups of related functions, with each group selectable from the Main Menu. Press **MENU** on the built-in keypad (see Figure 2-3) to display this menu.

To select a sub-menu, press ▲ or ▼ to highlight the desired option, then press **ENTER** or ▶.

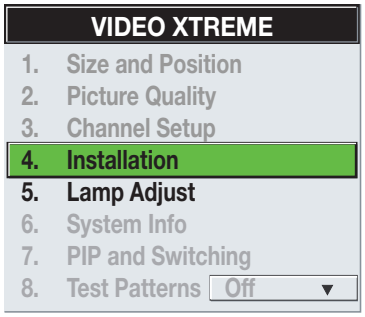

The corresponding function menu or pull-down list of further options will then appear.

You navigate the function menus in a similar manner: enter a menu option number for any numbered option, or use the ▲ and ▼ keys to highlight the desired option, then press **ENTER**. Extra long menus have a scroll bar on the right; use the arrow keys to access the remainder of the menu. Locked items or items that do not pertain to the current action or condition appear dimmed and cannot be selected.

Note

1. *If there is no signal present, all source-dependent adjustments are disabled.*
2. *After 15 minutes of inactivity, the projector leaves the menu system and returns to the presentation.*
3. *The System Info menu is read-only.*

When finished with a function menu, do one of the following:

- Press **EXIT** to return to the previous screen.
- Press **MENU** to leave the menu system and return to the presentation.

To set up the VX-44d/-55d for use with the DHD Controller, you will use the **Installation** and **Lamp Adjust** menus.

Select **Installation** from the VX-44d/-55d Main Menu to access these advanced lamp and lens configuration options:

- LumaCal™, for maintaining constant lamp brightness
- OptiCal™, to save and restore lens positions

➤ *Installation Menu*

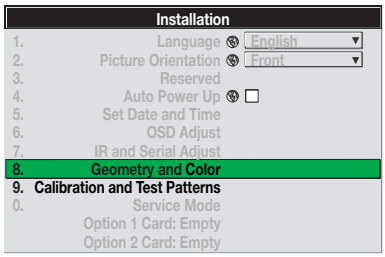

Calibration and Test Patterns – LumaCal (Lamp Calibration): LumaCal defines the range of power needed to maintain lamp brightness over time.

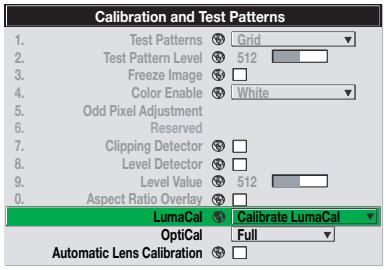

Note *For best results, allow the projector to warm up for 15 minutes prior to using LumaCal.*

To use LumaCal:

1. Select **Installation** from the Main Menu.
2. Select **Calibration and Test Patterns** from the Installation Menu.
3. Select **LumaCal** from the Calibration and Test Patterns Menu.
4. Select **Calibrate LumaCal** to calibrate the lamp using your projector's unique specifications (recommended). Or, select **Use Default Settings** to undo the effects of a previous calibration.

In the event of a power failure, the projector reverts to the default LumaCal settings in which case you should re-calibrate the lamp.

Note *LumaCal lamp calibration takes approximately two minutes.*

OptiCal (Primary Lens Calibration): OptiCal provides the ability to store and recall focus, zoom and position settings for the primary lens.

To enable OptiCal:

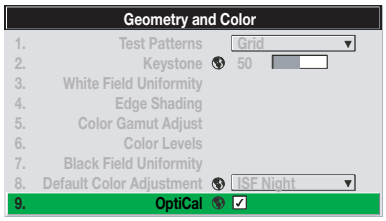

1. Select **Installation** from the Main Menu.
2. Select **Geometry and Color** from the Installation menu.
3. Select **OptiCal** from the Geometry and Color menu.
4. Press **ENTER** to check the box labeled **OptiCal**.

Note

1. OptiCal control is a preference setting and is retained between power cycles.

2. OptiCal has no effect on the secondary anamorphic lens, only the primary lens.

5. Press **EXIT** to exit the Geometry and Color menu.

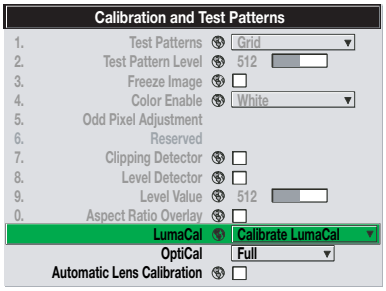

6. Select **Calibration and Test Patterns** from the Installation Menu.
7. Select **OptiCal** from the Calibration and Test Patterns Menu.

OptiCal gives you a choice of three types of lens calibrations:

- A **Reference** calibration establishes a reference point (starting position) for measuring relative lens movement. All distances are measured from this reference point.
  A reference calibration is lost when power is removed from the projector and occurs on every power-up as long as OptiCal is enabled.
- A **Motion** calibration determines the characteristics of each motor and values are saved in the projector's memory. If OptiCal is enabled and a motion calibration has previously been done, the projector automatically recalls these settings from memory when it's being powered up and a motion calibration will not take place.
- A **Full** calibration performs both a Reference calibration and a Motion calibration.

If no calibration has previously been done you may be prompted to do a **Full** calibration. If a motion calibration has been done, you will be prompted to complete a reference calibration. If both calibrations have been done, the **OptiCal** checkbox is checked and OptiCal enabled.

When OptiCal is enabled, the VX-44d/-55d performs a **Reference** calibration when the projector is turned on. The lens returns to its last saved position (or actual position, if no motion calibration has been done previously). Further adjustments to the zoom, focus and position are automatically saved.

When both OptiCal and **Automatic Lens Calibration** are enabled, the VX-44d/-55d performs a **Full** calibration when the projector is turned on. During calibration, the shutter closes and the status LED (see Figure 2-3) displays "LC."

Note

*If OptiCal is disabled (refer to **OptiCal (Primary Lens Calibration)** above), the Automatic Lens Calibration setting has no effect.*

3.13 Working With the Lamp

Access the Lamp Adjust menu to:

- Choose a lamp mode for regulating power and light output.

Note *You can also perform this task through the DHD Controller. For more information, refer to* ***Lamp*** *on page 66.*

- Change the optical aperture size.

Note *You can also perform this task through the DHD Controller. For more information, refer to* ***RVR*** *on page 68.*

- View information pertaining to past and present lamps.

Note *You can also obtain this information through the DHD Controller. For more information, refer to* ***Lamp Info*** *on page 72.*

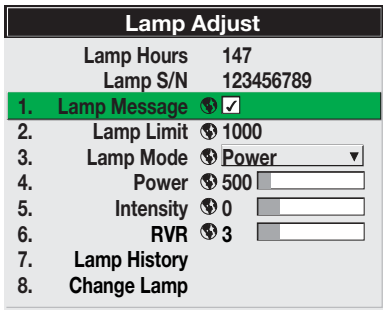

To access the Lamp Adjust menu, press **MENU** on the VX-44d/-55d built-in keypad (Figure 2-3). Then, Select **Lamp Adjust** from the Main Menu.

Lamp Hours (read-only): Lamp Hours shows the number of hours logged on the current lamp. Whenever you record a new lamp serial number, the VX-44d/-55d automatically resets this value to zero and begins to log time for the new lamp.

Lamp S/N (read-only): Lamp S/N is the serial number recorded for the current lamp. When you install a new lamp and enter its serial number, the number appears here.

Note *For detailed lamp replacement instructions, refer to* ***Lamp and Filter Replacement*** *on page 77.*

Lamp Message: Enter a check mark for **Lamp Message** to enable a warning message that appears upon power-up when the lamp has reached the specified lamp limit and should be replaced. Delete the check mark to prevent display of this message – instead, when your lamp expires, only the status display messages on the back of the projector will provide a visual warning to replace the lamp.

Note

1. *It is recommended that the Lamp Message check box remain enabled.*
2. *When a lamp warning message appears, press* ***EXIT*** *to temporarily dismiss the warning. The message will continue to appear upon power-up until you install a new lamp.*

Lamp Limit: Set Lamp Limit to the number of hours you expect to log on the current lamp before replacing it. This will trigger a lamp message on-screen (if enabled).

Note

1. *If you change modes over the life of a lamp, the lamp limit you originally expected may no longer be possible.*
2. *Turning the lamp on and off reduces lamp life significantly, as do other factors.*
3. *It is recommended that Lamp Limit not exceed the expected lamp life, otherwise a lamp could become dangerously fragile with overuse.*

Lamp Mode: Select the **Lamp Mode** you want to use in order to control the light output. You can choose to run the lamp as bright as possible, you can power the lamp with a specific wattage appropriate for the installed lamp or you can set a specific intensity (brightness) to maintain. Keep in mind that higher lamp power settings can shorten lamp life.

Use the lamp mode that best suits your brightness needs:

- **Max Brightness:** The lamp will always burn as brightly as possible, driven by 100% of the power level rating for the installed lamp (1,000 watts for the VX-44d or 1,200 watts for the VX-55d). Keep in mind that the “maximum brightness” for any lamp gradually diminishes over time.
- **Intensity:** Brightness will remain close to a specified level for as long as possible. If you select this option, enter a number representing the intensity level (brightness) you want to maintain – the VX-44d/-55d automatically adjusts power as needed to maintain this intensity as closely as possible.

Intensity 1246

This value and slidebar represents the current brightness of your lamp, decreasing over time when you are operating in Max Brightness mode or at a specific Power level. When you operate in Intensity mode, this value remains at the chosen Intensity setting and cannot be adjusted.

Note

The Intensity value is not the actual lumen output, but rather a correlated value only – 1246 may represent 3500 lumens, for example.

To use “Intensity” mode, judge by eye (or use a meter) and set the level as desired for your application. Over time, the projector will automatically increase the power supplied to the lamp as needed to maintain the chosen intensity as closely as possible.

- **Power:** The power supplied to the lamp will remain at your specified wattage level. Once you select this option, enter the number of watts representing the power level you wish to maintain.

Power 941

This slidebar and number indicates how many watts are applied to the lamp. You can apply anywhere from approximately 60% to 65% of the maximum power intended for the installed lamp up to 100% of the lamp rating. Set for the number of watts as desired, keeping in mind that lower power levels produce dimmer images. When in either Power or Max Brightness modes, the power level remains constant. Specifying a maximum power level here is the same as operating in Max Brightness mode.

HOW LONG CAN I MAINTAIN BRIGHTNESS? The VX-44d/-55d can maintain your "Intensity" setting until the required power reaches the maximum rating for the lamp. The lower the setting, the longer it will take to reach this threshold and the longer you can maintain the desired brightness. Keep in mind that once the lamp power reaches its maximum wattage (see "Power," above), this tracking is no longer possible. At this point, the lamp will gradually begin to dim as usual, even though your original "Intensity" value will still appear in the menu. To resume accurate tracking, reduce the intensity setting so that the resulting "Power" value is less than its maximum—the lower the intensity, the longer it can be maintained.

For example, a 1000-Watt lamp can be driven at no more than 1000 Watts. To produce desired brightness at the screen, a new lamp would likely need less than this maximum rating — perhaps 812 Watts (example only). Over time, however, the lamp requires more and more current in order to generate the desired light, until eventually the lamp wattage reaches its 1000-Watt maximum and the lamp power automatically levels off. At this point, the tracking function terminates (that is, the power level stabilizes) and the lamp begins to dim normally. Either reduce your "Intensity" setting or replace the lamp.

Do not lower the "Intensity" so much that the corresponding "Power" value reaches its minimum — the intensity setting will be inaccurate and cannot be maintained.

Note

1. *Lamps become more stable over time, thus a specific intensity is more easily maintained as the lamp ages.*
2. *Intensity can be set only if the lamp is in "Intensity" mode*
3. *Intensity cannot exceed the output of Max Brightness mode.*

RVR (Reflectance Volume Regulation): The optical aperture inside the projector controls the diameter of the light beam passing through the system. With a fully open aperture (slidebar default of "0"), the maximum amount of light passes through for maximum brightness in your images. Increase the slidebar setting to reduce the aperture diameter and maximize contrast ratio instead.

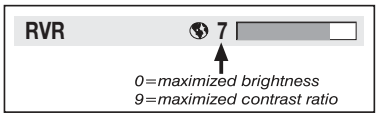

Lamp History (read-only): Lamp History shows the lamps most recently installed and recorded in the projector. The Lamp History automatically updates whenever you record a new lamp serial number; the new lamp is added to the end of the list.

Change Lamp: Not used. Use the DHD Controller to record the serial number for a newly-installed lamp. For detailed lamp replacement instructions, refer to ***Lamp and Filter Replacement*** on page 77.

Notes:

4. Operation

4.1 Using the On-Screen Menus

To display the Main Menu, press the **MENU** button on the remote control (Figure 2-6) or DHD Controller front panel (Figure 2-4).

To select a menu item, use the ▲ and ▼ buttons on the remote control or DHD Controller front panel to highlight it. Then, to confirm your selection, press **ENTER** on the remote control or DHD Controller front panel.

The DHD Controller OSD menus are arranged hierarchically, as shown in Figure 4-1. Depending on the selected input source and signal characteristics, some menu options may not be available.

Input Source	Composite
	S-Video 1
	S-Video 2
	Component
	HD1
	HD2
	SCART
	HDMI 1
	HDMI 2
Aspect Ratio	16:9
	4:3
	Letterbox
	VirtualWide
	Cinema
	Virtual Cinema
	Native
Picture	Brightness
	Contrast
	Color
	Tint
	Sharpness
	Noise Filter
Input Position	Left/Right
	Up/Down
	Width
	Height
	Overscan
	Overscan Mode (Zoom/Crop)
	Phase (RGB/Component/SCART signals only)
	Tracking (RGB/Component/SCART signals only)
Memory Presets	Recall ISF Night
	Recall ISF Day
	Recall/Save Custom
	Recall/Save THX
	Reset Custom or THX to Factory Default
Information	Signal
	System
	Field Service
	Manufacturing

Calibration	Display Color	Gain	-100, -99... **0** ... 99, 100 (Red, Green, Blue or All)
		Offset	
		Gamma	1.00, 1.01, 1.02 ... **2.20** ... 2.78, 2.79, 2.80
		Lamp	Mode (Power/Intensity)
			Power (VX-44d = 700, 701, 702 ... **1000W**) (VX-55d = 800, 801, 802 ... **1200W**)
			Intensity (0, 1, 2 ... **9999**)
		Color Temp	Mode (Simple/Advanced)
			Simple (3200K, 5500K, **6500K,** 7500K or 9300K)
			Advanced
		RVR	0, 1, 2 ... **9**
	Input Image	Brightness	-50, -49 ... **0** ... 49, 50
		Contrast	
		Color	
		Tint	
		Sharpness	
	Input Color	Gain	-32, -31... **0** ... 31, 32 (HD 1, HD 2 and Component inputs only)
		Offset	
		Chroma Delay	**0**, 1, 2 ... 7 (S-Video 1, S-Video 2 and Composite inputs only)
		Noise Filter	**0**, 1, 2 ... 63
	Save ISF Night	Yes / No	
	Save ISF Day		
	Copy/Paste	Copy Settings	
		Paste Settings	
	Output Shift	Left/Right	-50, -49 ... **0** ... 49, 50
		Up/Down	
		Width	-50, -49, 48 ... **0**
		Height	
	Splash Configure	Owner Name	
		ISF Calibrated	
		ISF Other	
		Splash Timer	5, 6, 7 ... **15** ... 59, 60
		Splash Enable	On/Off
	OSD Position	Hor. / Ver.	**0**, 1, 2 ... 100

Note: Default settings appear in **bold type**.

Figure 4-1. DHD Controller OSD Menu Structure for VX-44d/-55d

Service	Test Video	Color Bars 1	
		Color Bars 2	
		Focus	
		Grey Bars	
	Input Names	Rename/Restore	
	Remote Control	Remote Code	00, 01, 02 ... **17** ... 31
		COMP Key Source	**Component** or SCART
	Display Device - Configure	Installation	Picture Orientation: Floor Front, Ceiling Front, Floor Rear or Ceiling Rear
			Vertical Keystone
		Lens	Focus
			Zoom
			Shift
		Lamp Info (read-only)	Serial Number, Hours
		Lamp Hours Reset	Enter serial number and Set in Display/ Cancel
		Diagnostics	White, Red, Green, Blue, Yellow, Cyan, Magenta
	Display Device - Auto Calibration	Yes/No	
	Color Space	**Auto**, REC601, REC709 or RGB-PC	(Not available on S-Video or Composite video inputs)
	Triggers	1 / 2 / 3	
	Miscellaneous	Language	English, Français, Deutsch, Italiano. Español, Svenska, Traditional Chinese, Simplified Chinese, Português or Russian
		OSD Timer	0 (no timeout) or 5, 6, 7 ... **15** ... 60 sec.
		OSD Messages	On / Off
		Blank Screen Color	Red/Green/Blue = **0**, 1, 2, 3 ... 255
		Sidebar Color	
		Film Mode (SD sources only)	On / Off
		CUE (Chroma Upsampling Error)	On / Off
	Sync Threshold	0, 1, 2 ... 15	(HD 1, HD 2 and Component inputs only)
	HDMI EDID Extension	HDMI 1 / HDMI 2	**On** / Off
	Front Panel Brightness	Logo LED	0 (off), 1, 2 ... **31**
		Standby LED	**On** / Off
		LCD	0 (off), 1, 2, 3 or **4**
	System Reset		

Figure 4-1. DHD Controller OSD Menu Structure for VX-44d/-55d (continued)

Main Menu ➤ The Main Menu is the starting point for accessing all DHD Controller functions.

(You must enter a passcode to access the Calibration and Service menus.)

Runco Video
Input Source
Aspect Ratio
Picture
Input Position
Memory Presets
Information
Calibration
Service

From the Main Menu, select Input Source to choose a video signal source.

The active source is indicated by an arrow (➡) to its left; in this example, Composite is the active source.

◄ ***Input Source***

Input Source	
➡	Composite
	S-Video 1
	S-Video 2
	Component
	HD1
	HD2
	SCART
	HDMI 1
	HDMI 2

To change the aspect ratio (size and shape) of the projected image, select Aspect Ratio from the Main Menu and press **ENTER**. Select the appropriate aspect ratio for your screen size and the type of program material being viewed; refer to Table 4-1.

The currently-selected aspect ratio is indicated by a "☒" to its left; in this example, 16:9 is selected.

Note that some aspect ratios are unavailable and/or not useful with certain types of source material. The optimal setting depends on a number of factors, such as:

- The aspect ratio of the source material, as broadcast or encoded on the playback medium.
- The "display type" (16:9 or 4:3) and output resolution settings at the source component. Most modern DVD/BD players and set-top boxes have such controls.
- Viewer preference (original aspect ratio with "black bars," or a full-screen presentation with some distortion or cropping).

◄ ***Aspect Ratio***

Aspect Ratio	
☒	16:9
☐	4:3
☐	Letterbox
☐	VirtualWide
☐	Cinema
☐	Virtual Cinema
☐	Native

Note *The aspect ratio selection is automatically saved for each input and resolution.*

Table 4-1. Aspect Ratio Settings

Aspect Ratio	Remote Control Key	Description	
16:9	16:9	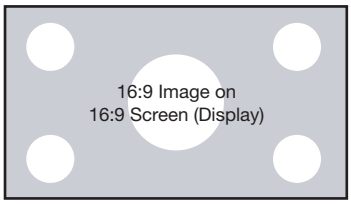 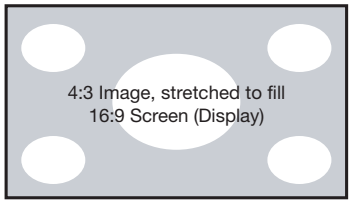	Select 16:9 to view 16:9 DVDs and HDTV programs in their native aspect ratio. 4:3 images are stretched horizontally to fit a 16:9 screen.
4:3	4:3	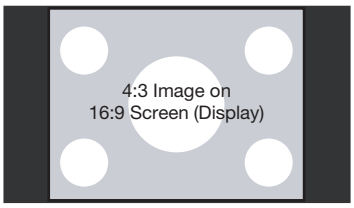	Standard 4:3 scales the input signal to fit in the center of the 16:9 screen. 4:3 is the aspect ratio used by computer monitors, standard television programming and most VHS video cassettes.
Letterbox	LBOX	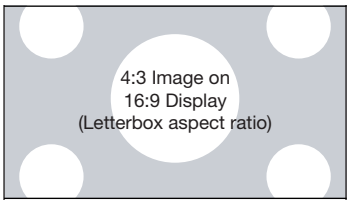	Letterbox mode scales (zooms in on) a 4:3 image linearly (by the same amount on all sides) to fill a 16:9 display. Letterbox is best suited for viewing LaserDisc movies or non-anamorphic DVDs on a 16:9 screen.
VirtualWide	VWIDE	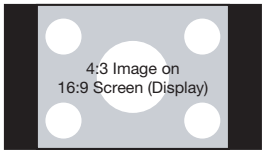 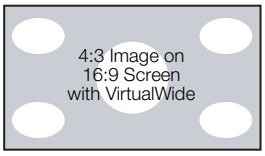 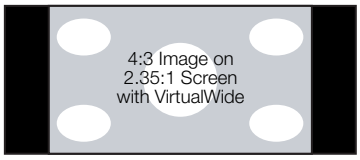	VirtualWide scales a 4:3 image NON-linearly (more on the sides than in the center) to fit a 16:9 screen. On a 2.35:1 screen, the image is centered between black bars on either side.

Table 4-1. Aspect Ratio Settings (continued)

Aspect Ratio	Remote Control Key	Description	
Cinema	CINEMA	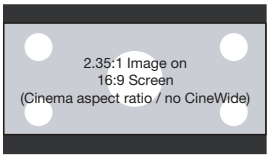 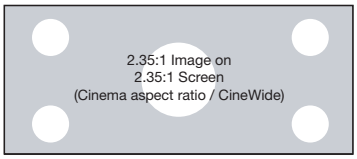	Select Cinema to view 2.35 source material in its native aspect ratio. With a 16:9 screen and a non-CineWide projector (no anamorphic lens), the upper and lower portions of the screen are masked, but the geometry of the active image area is unchanged. With a 2.35:1 screen and a CineWide-equipped projector, the DHD Controller scales the 2.35:1 image so that the active image area fills the 16:9 chip surface, eliminating the black bars. The secondary, anamorphic lens then restores the proper geometry to the 2.35:1 image.
Virtual Cinema	SVC	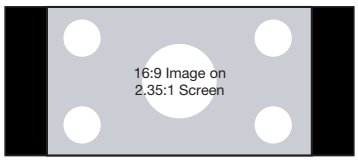 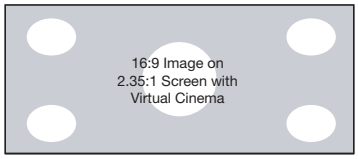	A 16:9 image is scaled NON-linearly (more on the sides than in the center) to fit a 2.35:1 screen.
Native	(none)	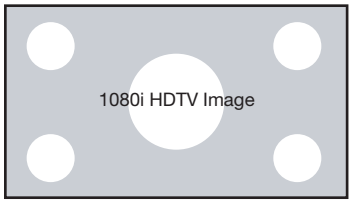 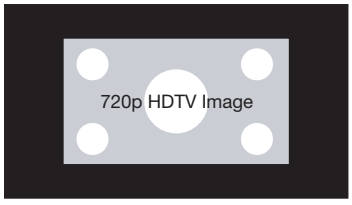	Select Native to display the source signal in its native resolution, centered in the display area with no re-sizing or overscan. This means, for example, that 720p HDTV programs will display with unused pixels on all sides: 320 on the left and right sides and 180 above and below. With SDTV and EDTV sources, the DHD Controller scales the image horizontally to achieve a 16:9 aspect ratio.

Picture ➤

Picture
Brightness
Contrast
Color
Tint
Sharpness
Noise Filter

Use the controls in the Picture Menu to calibrate each DHD Controller input to achieve optimum picture quality.

The DHD Controller has been designed to incorporate setup and calibration standards established by the Imaging Science Foundation (ISF). The ISF has developed carefully crafted, industry-recognized standards for optimal video performance and has implemented a training program for technicians and installers to use these standards to obtain optimal picture quality from Runco video display devices. Accordingly, Runco recommends that setup and calibration be performed by an ISF certified installation technician.

All signal types require separate processing. Therefore, you need to calibrate each DHD Controller input separately.

Note

When you change a picture quality setting, save the change to a preset afterwards. Otherwise, the change will be lost when a different input is selected. (Picture quality settings are saved for each input separately.) For information about saving settings, refer to ***Memory Presets*** *on page 64.*

Although it may be possible to obtain satisfactory picture quality using the naked eye and regular program material, Runco recommends using the following calibration tools for best results:

- External test pattern source – Ovation Multimedia, Digital Video Essentials or AVIA test DVD or equivalent.
- A blue filter (provided with many test DVDs), for color level and tint adjustments.

Connect your test pattern source to the input that you are calibrating and proceed as follows. **Perform the adjustments in the order listed here.**

Brightness: On your external test pattern source, select a PLUGE pattern. (PLUGE is an acronym for “Picture Line-Up Generation Equipment.”) Figure 4-2 shows a typical PLUGE pattern.

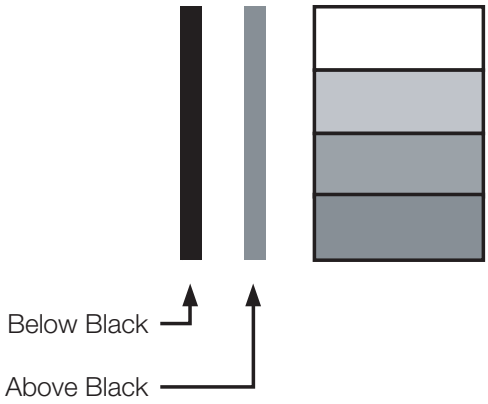

Figure 4-2. Typical PLUGE Pattern for Adjusting Brightness

PLUGE patterns vary but generally consist of some combination of black, white and gray areas against a black background. The example above includes two vertical bars and four shaded boxes.

Select Brightness from the Picture menu and press **ENTER**. Adjust the brightness so that:

- The darkest black bars disappear into the background.
- The dark gray areas are barely visible.
- The lighter gray areas are clearly visible.
- The white areas are a comfortable level of true white.
- The image contains only black, gray and white (no color).

Contrast: On your external test pattern source, select a stepped, gray-bar pattern like the one shown in Figure 4-3.

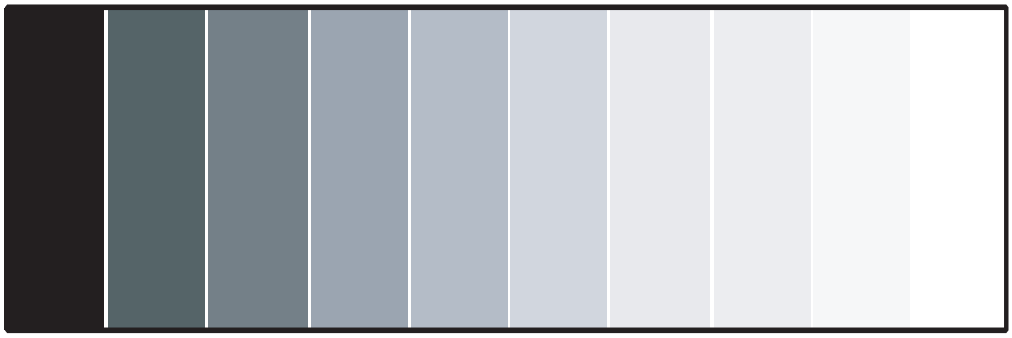

Figure 4-3. Typical Gray Bar Pattern for Adjusting Contrast

Select Contrast and press **ENTER**. Adjust the contrast to a point just below which the white rectangle starts to increase in size.

Note

Brightness and contrast controls are interactive. A change to one may require a subtle change to the other in order to achieve the optimum setting.

Color Saturation: On your external test pattern source, select a color bar pattern like the one shown in Figure 4-4.

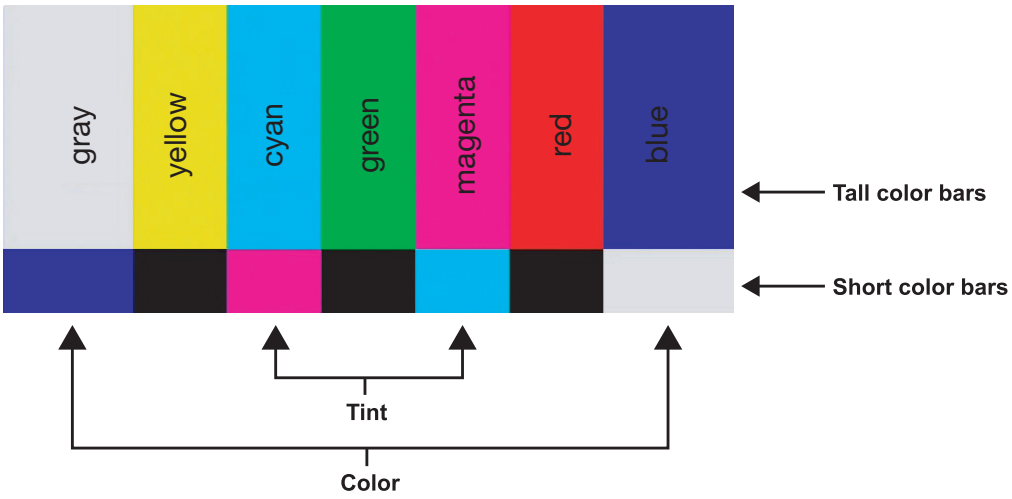

Figure 4-4. Typical Color Bar Pattern for Adjusting Color Saturation and Tint

Select Color and press **ENTER**. While looking at the color bar pattern through a blue filter, adjust the color saturation level until the outermost (gray and blue) color bars appear to be a single shade of blue:

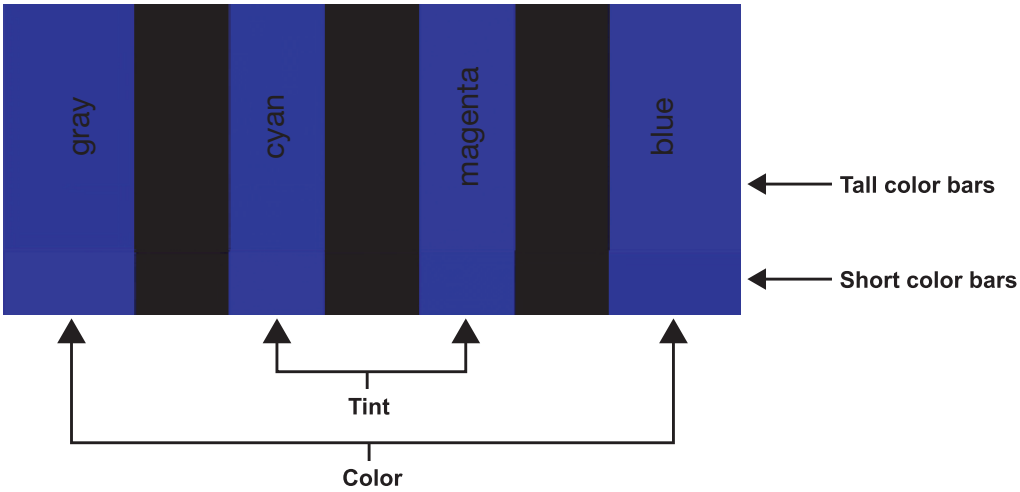

Tint: Tint or “hue” is essentially the ratio of red to green in the color portion of the image. When tint is decreased, the image appears redder; when it is increased the image appears greener. To set the tint, select Tint and press **ENTER**. While looking at the color bar pattern through a blue filter, adjust the tint level until the cyan and magenta color bars (on either side of the green bar) appear to be a single shade of blue.

Note

Like the brightness and contrast controls, the color and tint controls are interactive. A change to one may require a subtle change to the other in order to achieve the optimum setting.

Sharpness: “Sharpness” is the amount of high-frequency detail in the image. To adjust sharpness, select Sharpness from the Picture menu and press **ENTER**. On your external test pattern source, select a pattern like the one shown in Figure 4-5. Adjust as needed, looking for white edges around the transitions from black to gray and differently-sized lines in the “sweep” patterns at the top and bottom. Lower the sharpness setting to eliminate them.

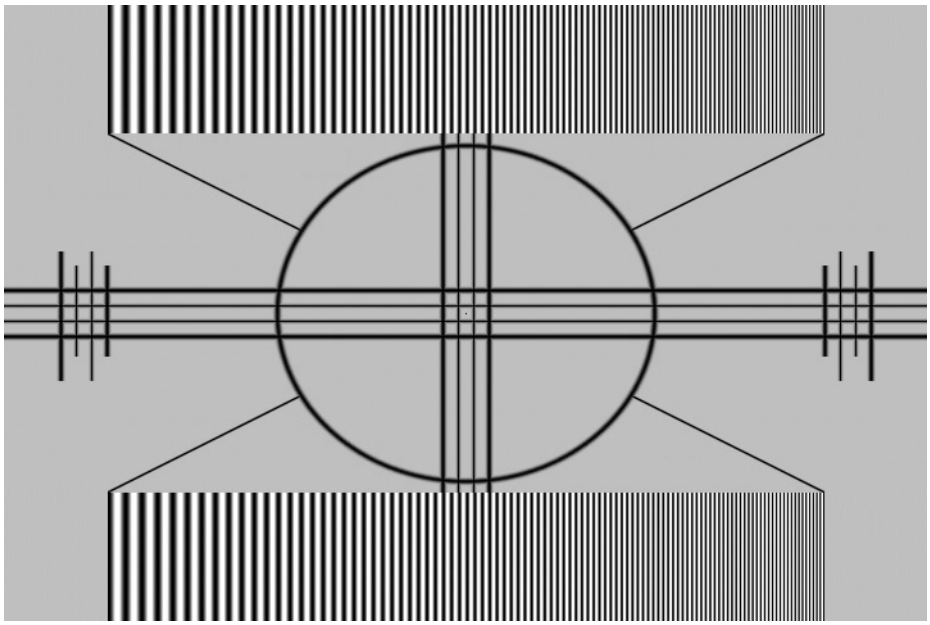

Figure 4-5. Typical Test Pattern for Adjusting Sharpness

Noise Filter: To apply noise filtering to the input signal, select Noise Filter from the Picture menu. The Noise Filter is useful for clearing up noisy images from 480i video sources.

Use the left- or right-arrow buttons to select the desired amount of noise reduction, keeping in mind that higher settings (which reduce high frequencies) may also “soften” the image.

Input Position ➤

Input Position
Left/Right
Up/Down
Width
Height
Overscan
Overscan Mode
Phase
Tracking

Use the controls in the Input Position Menu to fine-tune the aspect ratio and image position for the current source.

Note *The input position settings are automatically saved for each input and resolution.*

Left/Right: Select Left/Right from the Input Position menu to shift the projected image horizontally. Press ▶ to shift the image to the right; press ◀ to shift it to the left.

Up/Down: Select Up/Down from the Input Position menu to shift the projected image vertically. Press ▶ to shift the image upward; press ◀ to shift it downward.

Width: Select Width from the Input Position menu to change the projected image width. Press ▶ to increase the width; press ◀ to decrease it.

Height: Select Height from the Input Position menu to change the projected image height. Press ▶ to increase the height; press ◀ to decrease it.

Overscan/Overscan Mode: Overscan pushes the outside edge of the active picture area of the video signal out beyond the edge of the display area.

Some television programs are produced based on the assumption that older television sets may not display the outer edges of the broadcast picture area. Overscan effectively trims away these inactive, outer edges and enlarges the remaining portion of the image to fill the display area.

For HDTV, DVDs and other video sources, Overscan is generally not necessary or desirable.

This control defines the amount of overscan applied to the image. The range is from 0 to 20. There are two overscan modes:

- In **Crop** mode, each increment adds a mask at the top, bottom, left and right edges of the source image equal to 0.5% of the displayed horizontal resolution (1% total). A setting of 10, for example, crops the image 5% on all sides or 10% total.
- In **Zoom** mode, each increment adds a factor to the scaling of the source image so that the vertical and horizontal resolutions are 100% plus 1% increments of the size determined by the aspect ratio function. A setting of 10, for example, zooms in on the image 5% on all sides or 10% total.

Figure 4-6 illustrates the effect of each overscan mode setting.

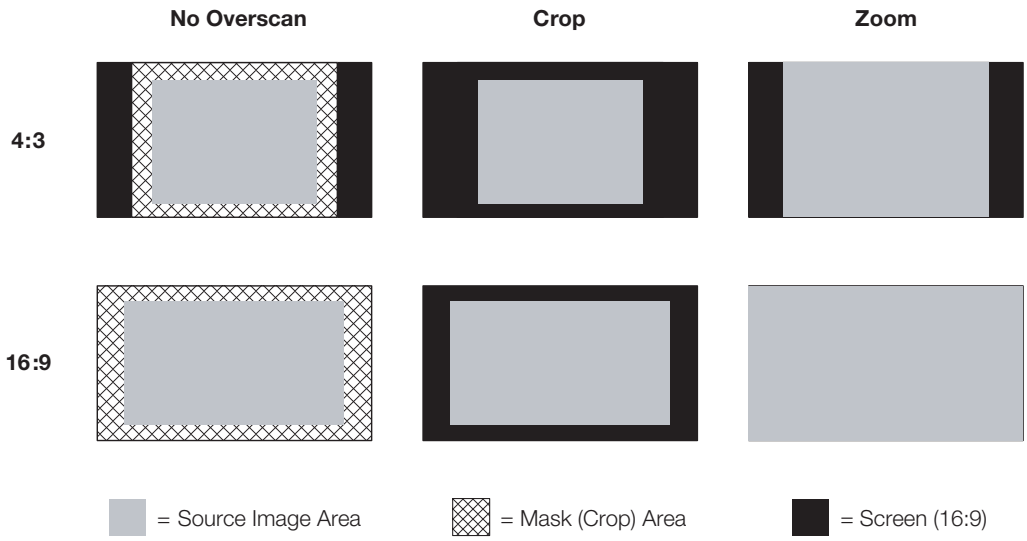

Figure 4-6. Overscan Modes

Phase (RGB, Component or SCART sources): This control adjusts the phase of the pixel sampling clock relative to the incoming signal. Adjust the phase when an RGB, Component or SCART image still shows shimmer or “noise” after Tracking has been optimized.

Tip

Adjust the Phase after adjusting Tracking (see below).

For best results, use a good test pattern such as a smooth gray consisting of a clear pattern of black and white pixels, or a similar “half on, half off” graphic image. Adjust the slidebar until the image stabilizes and each pixel is clearly defined. You may notice that you can stabilize the image at more than one point. Use either setting in such cases.

Tracking (RGB, Component or SCART sources): Tracking determines the frequency of the pixel sampling clock, indicated by the number of incoming pixels per line, so that all pixels generated by a particular source are sampled.

Steady flickering or several soft vertical stripes or bands across the entire image indicates poor pixel tracking. Proper pixel tracking helps ensure that the image quality is consistent across the screen, that aspect ratio is maintained and that pixel phase (see above) can be optimized.

Memory Presets ➤

Memory Presets		
➡ ISF Night		
ISF Day		
Custom	Save	Reset
THX	Save	Reset

For each input, the DHD Controller lets you save image quality settings as presets that you can recall at a later time. You can create up to four presets per input and display mode (resolution and frame rate).

The DHD Controller stores the following display modes in each memory preset:

- 480i
- 480p
- 576i
- 576p
- 720p/24 Hz
- 720p/25 Hz
- 720p/30 Hz
- 720p/50 Hz
- 720p/60 Hz
- 1080i/50 Hz
- 1080i/50 Hz (Australia)
- 1080i/60 Hz
- 1080p/24 Hz
- 1080p/25 Hz
- 1080p/30 Hz
- 1080p/50 Hz
- 1080p/60 Hz

Use the Memory Presets menu to recall saved image presets, or to save image settings in the “Custom” or “THX” memory location. The currently-selected preset is indicated by a “➡” to its left; in the example shown here, ISF Night is selected.

You should save changes to any of the following settings to a preset; otherwise they will be lost when a new input source or resolution is selected:

- Brightness
- Contrast
- Color saturation
- Tint
- Sharpness
- Gamma
- Lamp Settings
- Color temperature and white balance

To select a memory preset, press ▲ or ▼ to highlight it and press **ENTER**.

To save the settings for the current input and display mode to the Custom or THX memory preset, select it, press ◀ or ▶ to highlight Save and press **ENTER**.

Note

To save the settings for the current input and display mode to the ISF Night or ISF Day memory preset, select Save ISF Night or Save ISF Day from the Calibration menu (refer to ***Save ISF Night/Save ISF Day*** *on page 69).*

To reset the Custom or THX memory preset to its factory-default state, select it, press ◀ or ▶ to highlight Reset and press **ENTER**.

Signal / System: Select Information from the Main Menu, then choose either Signal or System to display information about the current input signal (resolution, frequency, type et cetera) and installed firmware versions, as well as other information that uniquely identifies your DHD Controller and display device.

Should you ever need to contact Runco Technical Support, this information will help them answer your questions or resolve product performance issues.

◀ ***Information***

Information
Signal
System
Field Service
Manufacturing

Signal	
Input Source	HDMI 1
Signal Format	1080p/60
Input Resolution	1920x1080
Vertical Freq	59.94 Hz
Horizontal Freq	67.500 kHz
Pixel Clock	148.500 MHz
Color Space	REC709
Sync Type	Separate
Memory Preset	ISF Night

System	
Model	DHD3
Display Name	VX-44d/-55d
Output Resolution	1920x1080
Serial Number	00000000
Boot Version	3.0
Firmware Version	3.4
Micro Version	3.3

Field Service / Manufacturing: The Field Service and Manufacturing menus are password-protected and intended for use only by Runco service personnel and factory technicians.

Use the Calibration menu to perform advanced picture quality adjustments. **This menu should be used by ISF-certified technicians only.**

◀ ***Calibration***

Calibration
ISF Settings
Display Color
Input Image
Input Color
Save ISF Night
Save ISF Day
Copy/Paste
Output Shift
Splash Configure
OSD Position

Note *You must enter a passcode to access the Calibration menu.*

To recall the ISF Night or ISF Day settings, select “ISF Night” or “ISF Day” from the Memory Presets menu (see page 64) or use the corresponding remote control buttons.

Display Color: Use the Display Color settings to adjust the color balance at the DHD Controller output. These settings are saved independently for each input and display mode.

- **Gain:** Use the Gain controls to correct color imbalances in the bright areas of the image. A good way to do this is to use a test pattern consisting mostly of solid white areas, such as an 80 IRE “window” pattern. If the white areas contain traces of red (Pr), green (Y) or blue (Pr), decrease the Gain for that color.
- **Offset:** Use the Offset controls to correct color imbalances in the dark areas of the image. A good way to do this is to use a test pattern consisting mostly of dark gray areas, such as a 30 IRE “window” pattern. If the gray areas contain traces of red (Pr), green (Y) or blue (Pr), decrease the Offset for that color.

- **Gamma:** Select Gamma from the Display Color menu to choose a de-gamma curve. Used correctly, the Gamma control can improve contrast while maintaining good details for blacks and whites. If excess ambient light washes out the image and it becomes difficult or impossible to see details in dark areas, lower the gamma setting to compensate. This improves contrast while maintaining good details for blacks. Conversely, if the image is washed out and unnatural, with excessive detail in black areas, increase the setting.
- **Lamp:** Select Lamp from the Display Color menu to adjust the projector lamp brightness.

Note *You can also perform this task using the VX-44d/-55d built-in keypad. For more information, refer to* ***Working With the Lamp*** *on page 49.*

  - **Mode:** With the VX-44d/-55d, two lamp adjustment modes are available: Power or Intensity. The two modes are mutually exclusive; when you select the Power mode, the Intensity selection in the Lamp menu is grayed out. Likewise, when you select Intensity, the Power selection is grayed out.
  - **Power:** To supply a constant wattage to the lamp, select Mode from the Lamp menu and set it to Power. Then, select Power from the Lamp menu to set the lamp power level. You can choose to run the lamp as bright as possible (this is the default setting) or you can choose a lower setting. Generally, lower lamp output prolongs the life of the lamp, but decreases brightness.
  - **Intensity:** To maintain a constant brightness level, select Mode from the Lamp menu and set it to Intensity. Then, select Intensity from the Lamp menu to specify the desired brightness level. The projector automatically adjusts the amount of power applied to the lamp as needed to maintain the desired brightness level.

Note *The Intensity value is not the actual lumen output, but rather a correlated value only—1246 may represent 3500 lumens, for example.*

- **Color Temp:** Select Color Temp from the Display Color menu to adjust the color temperature. Color temperature establishes the “color of gray” by adjusting the 75% white point to various color points.

  What are “color points?” A “color point” is an x/y coordinate pair that defines a color’s location on the standard CIE chromaticity graph, shown in Figure 4-7. (CIE stands for “Commission Internationale de l’Éclairage” (International Commission on Illumination), the organization responsible for color measurement and management standards.)

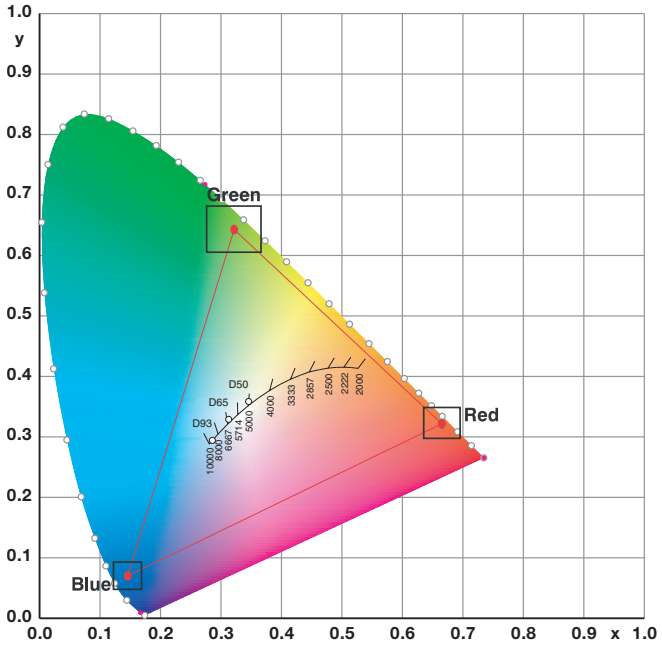

Figure 4-7. CIE 1931 Chromaticity Diagram

- **Mode:** With the VX-44d/-55d, two color temperature adjustment modes are available: Simple or Advanced. The two modes are mutually exclusive; when you select the Simple mode (or if Advanced mode is not supported by the projector), the Advanced selection in the Color Temp menu is grayed out. Likewise, when you select Advanced, the Simple selection is grayed out.
- **Simple:** Use Simple mode to choose one of five color temperature presets: 3200K, 5500K, 6500K, 7500K and 9300K. The default setting, 6500K, is appropriate for most situations. Higher settings produce a “bluer” picture; lower ones impart a reddish hue to the image.

  Table 4-2 lists the x- and y-coordinates for each color temperature preset in “Simple” mode.

Table 4-2. Color Temperature Presets and Associated Color Points

Color Temperature Preset	Associated x/y Values	
	x	y
3200K	0.423	0.404
5500K	0.332	0.348
6500K	0.313	0.329
7500K	0.299	0.315
9300K	0.284	0.298

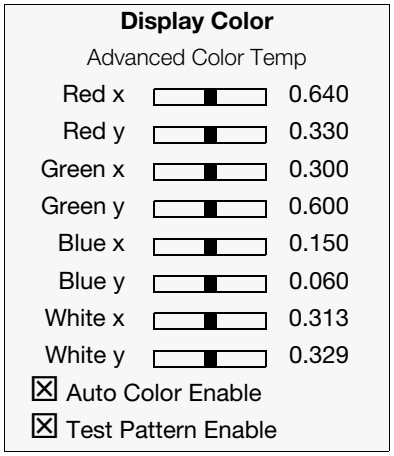

- **Advanced:** For more precise white balance control, use Advanced mode to create a “custom” color gamut and color temperature. You do this by specifying x/y coordinate values for each primary color point (red, green and blue) and the white point.

  The default values (shown here) are the RGB color space parameters defined in ITU-R Recommendation BT.709. You can adjust them up or down by a factor of 0.100; for example, the “Red x” range is from 0.540 to 0.740.

  The **Auto Color Enable** and **Test Pattern Enable** checkboxes let you choose what to display on-screen while making these adjustments. These controls work together as follows:

Auto Color Enable Setting	Test Pattern Enable Setting	Description
Off	Off	When both boxes are unchecked, the input signal (normal picture) appears on the display.
Off	On	When only the Test Pattern Enable box is checked, a white “curtain” test pattern appears instead of the input signal.
On	Off	When only the Auto Color Enable box is checked, the input signal appears on the display. When you select a red, green or blue color point to adjust, the DHD Controller displays only that color channel. When you select a white point x- or y-value, all colors are visible (normal picture).
On	On	When both boxes are checked, the DHD Controller automatically displays a red, green, blue or white “curtain” test pattern when you select an x- or y-value for that color point to adjust.

- **RVR:** Use the RVR control to increase or decrease the Reflectance Volume Regulation setting. RVR lets you control the aperture or iris size (the physical opening through the lens; similar to an “f-stop” on a camera). Doing so allows you to optimize brightness and contrast according to the amount of ambient light in the viewing area.

  Use a higher setting for rooms with a lot of ambient light. Use a lower setting for more “theater-like” viewing conditions (little or no ambient light).

Input Image: The Input Image controls are functionally similar to those in the Picture menu (refer to page 58), but are accessible only by entering the Calibration menu passcode.

Note

The Input Image settings establish the "zero point" for the Picture menu settings, whose values represent offsets from the Input Image settings. For example, if you set Brightness to 10 in this menu, setting Brightness to 10 in the Picture menu results in an actual setting value of 20 (10+10).

Input Color: The Input Color controls are similar to those in the Display Color menu (see above), but adjust the color balance of the incoming signal. These settings are also saved independently for each input and display mode.

- **Gain/Offset (HD1, HD2 and Component/SCART inputs only):** These controls operate similarly to those in the Display Color menu (described on page 65), but affect the Y, Pb and Pr signal components rather than the red, green and blue channels.
- **Chroma Delay:** use the Chroma Delay control to correct a mis-aligned image from a Composite or S-Video source. Chroma delay in an image causes color shifts to occur to the left of the vertical edge transitions, producing artificial shadows or a "halo" effect. If necessary, adjust this setting to eliminate them.
- **Noise Filter:** To apply noise filtering to the input signal, select Noise Filter from the Input Color menu. The Noise Filter is useful for clearing up noisy images from 480i video sources.

  Use the left- or right-arrow buttons to select the desired amount of noise reduction, keeping in mind that higher settings (which reduce high frequencies) may also "soften" the image.

Save ISF Night/Save ISF Day: Whenever you make a change to the ISF settings, you should always save it. Select Save ISF Night or Save ISF Day from the Calibration menu to do this.

Copy/Paste: You can copy and paste settings from one memory location to another. This gives you a convenient starting point for creating a new preset based on an existing one, to make the calibration process less time-consuming.

Copy/Paste	
Copy Settings	
Paste Settings	
Copied From:	
Input Source	HDMI 1
Signal Format	1080p/60
Memory Preset	ISF Night

For example, you can use the Copy/Paste feature to:

- Apply settings from HDMI 1 to HDMI 2, or from HD1 to HD2.
- Calibrate an input for 720p source signals, then use those settings for 1080i sources.
- Duplicate ISF Night settings for a given source and signal format and save them in the "Custom" memory preset.

To use this feature, select Copy/Paste from the Calibration menu.

- **Copy Settings:** Select Copy Settings from the Copy/Paste menu to place the settings for the current input source, signal format (resolution and frame rate) and memory preset onto a "clipboard," which is a temporary memory location. When you do, the message "Settings Copied" briefly appears on-screen. The Copy/Paste menu then re-appears, indicating the source of the copied settings.

Note

Copied settings are not retained after a power cycle.

- **Paste Settings:** To apply the settings on the clipboard to a different input source, signal format and/or memory preset, do **any or all** of the following:
  - Switch to another DHD Controller input (for example, from HD1 to HD2).
  - Change the output signal format at the source (for example, from 720p/60 to 1080i/60).
  - Switch to another Memory Preset (for example, from ISF Night to Custom).

  Then, select Paste Settings from the Copy/Paste menu. ***If you want to keep these new settings, you must save them!*** (Refer to ***Save ISF Night/Save ISF Day*** on page 69 or ***Memory Presets*** on page 64.)

Output Shift: The controls in the Output Shift menu are similar to those in the Input Position menu, except that they change the characteristics of the output signal. These settings are saved independently **for each aspect ratio**.

Splash Configure: Use the Splash Configure menu to control the appearance and behavior of the "splash" screen that appears on the display upon power-up.

- **Owner Name/ISF Calibrated/ISF Other:** You can have the VX-44d/-55d display the owner's name, your name, the phrase "ISF Calibrated" and/or any other string, up to 30 characters in length.

  Use the up or down cursor button to select a character. Use the right and left cursor buttons to change the cursor position. Press **MENU** when you have finished entering text.
- **Splash Timer:** When you turn on the VX-44d/-55d, it projects a welcome screen with the Runco and ISF logos, along with the personalized information you enter as described above. Select Splash Timer from the Splash Configure menu to set the amount of time for which this screen appears. The range is from 5 to 60 seconds, in one-second increments. Press ◀ or ▶ to set the timer, then press **MENU**.
- **Splash Enable:** When you have finished customizing the splash screen, select Splash Enable from the Splash Configure menu. Then, select On and press **ENTER**.

OSD Position: To adjust the position of the OSD, select OSD Position from the Calibration menu and press **ENTER**.

Press ▲ or ▼ to select "Hor." or "Ver." Then, press ◀ or ▶ to change the position.

Service ➤

Use the Service menu to access advanced projector configuration settings. **This menu should be used by ISF-certified technicians only.**

Service
Test Video
Input Names
Remote Control
Display Device
Color Space
Triggers
Miscellaneous
Sync Threshold
HDMI EDID Extension
Front Panel Brightness
System Reset

Note *You must enter a passcode to access the Service menu.*

Test Video: Select Test Video from the Service Menu to access the internal test patterns on the DHD Controller. Four patterns are available: Horizontal Ramp, Vertical Ramp, Color Bars 1 (solid bars) and Color Bars 2 (SMPTE "checkerboard" pattern).

Press **MENU** to exit test pattern mode.

Input Names: You can give each DHD Controller input a descriptive name. For example, you may want to change the default input name to the type of source component connected to it: “VCR,” “DVD,” “Laptop” et cetera. Input names can be up to 12 characters long.

To edit an input name, select Input Names from the Service menu. Press ▲ or ▼ to select an input and press **ENTER**. Use the ▲ or ▼ buttons to change a character; press ◀ or ▶ to select a character to change. When you have finished editing the input name, press **ENTER** or **MENU**.

To restore the default input name, press ▼ repeatedly to highlight that input name in the “Restore” column. Then, press **ENTER**.

Input Names	
	Restore
Composite	Composite
S-Video 1	S-Video 1
S-Video 2	S-Video 2
Component	Component
HD 1	HD 1
HD 2	HD 2
SCART	SCART
HDMI 1	HDMI 1
HDMI 2	HDMI 2

Remote Control: Select Remote Control from the Service menu to change the following settings related to remote control operation.

- **Remote Code:** Select Remote Code from the Remote Control menu to set the infrared (IR) code set to which the DHD Controller will respond. By default, it is set to 17. You can change this setting if either:
  - Another device in the theater (a DVD player, for example) is responding to commands from the DHD Controller remote control (Figure 2-6) in ways that are unpredictable or undesirable.
  - You have multiple DHD Controllers and want to control them independently, as opposed to broadcasting commands from a single remote to all of them. In this scenario, you can use multiple remotes programmed to use different IR codes. Or, you can use a single remote and change the IR code as needed to address a specific DHD Controller.

Tip *Use the DHD Controller front-panel keypad to change the IR code to which the controller will respond. Then, change the code sent by the remote to match as described below.*

When you change a remote code on the DHD Controller, you must re-program the DHD Controller remote control to send that same code. To do this:

1. Press and hold the **LIGHT** button on the remote control for approximately three seconds, or until the LED on the remote lights solid red.

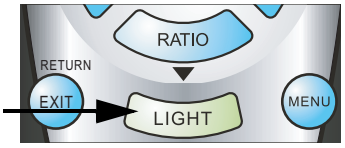

2. Enter a new two-digit code between 00 and 31 inclusive. Include a leading zero for single-digit codes; for example, enter 9 as “09.”
3. The LED turns off to confirm the code change. If you enter an invalid code, the LED flashes for three or four seconds. Try again, entering a valid code.

- **COMP Key Source:** Select COMP Key Source from the Remote Control menu to assign the COMP remote control button to either the Component or SCART input.

Display Device - Configure: The options in the Display Device - Configure menu allow you to change the picture orientation, perform lens adjustments or access other, display-device specific functions.

- **Installation – Orientation:** Select Installation from the Display Device - Configure menu, then select Orientation to change the picture orientation to suit the method of installation (Floor Front, Floor Rear, Ceiling Front or Ceiling Rear).
- **Installation – Vertical Keystone:** Projector placement and other factors can cause geometric distortion in the projected image. To correct this, select Vertical Keystone from the Installation menu and use the ◀ or ▶ button to make the image rectangular. See Figure 4-8.

Tip *Runco recommends that the keystone feature not be used unless absolutely necessary, as it may cause artifacts in the image.*

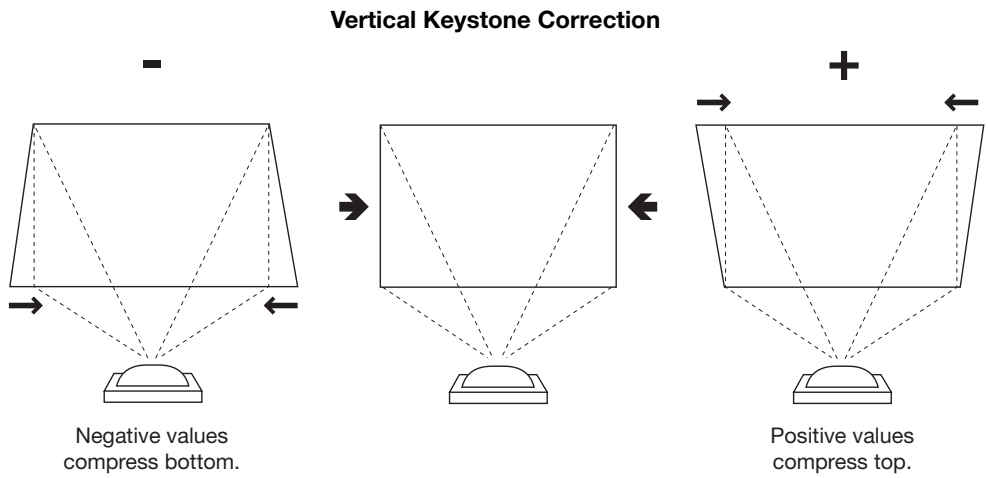

Figure 4-8. Keystone Correction

- **Lens:** Select Lens from the Display Device - Configure menu to access the motorized lens controls. Refer to ***Primary Lens Adjustments*** on page 41.
- **Lamp Info:** Select Lamp Info from the Display Device - Configure menu to obtain information about the currently-installed lamp: its serial number and number of hours in use.

Note *You can also obtain this information using the VX-44d/-55d built-in keypad. For more information, refer to* ***Working With the Lamp*** *on page 49.*

- **Lamp Hours Reset:** When you replace the projector lamp, you should also reset the lamp hour counter to zero so that the lamp usage information in the Lamp Info window is accurate. To do this, select Lamp Hours Reset from the Display Device - Configure menu.

  A confirmation dialog box appears. Enter the serial number of the new lamp using the ▲, ▼, ◀ and ▶ buttons on the DHD Controller front-panel keypad or remote control unit, as follows:

1. Press ◀ or ▶ to select a character to edit.
2. Press ▲ or ▼ to edit that character.
3. When you have finished entering the serial number, press **ENTER**.
4. Select “Set in Display” to continue with the reset (or “Cancel” to cancel the operation).
5. Press **ENTER** again. This adds the new lamp serial number to the Lamp History menu and resets the Lamp Hours timer to zero. Lamp Mode and Lamp Limit remain as they were for the previous lamp and can be changed at any time.

- **Diagnostics:** Select Diagnostics from the Display Device - Configure menu, then select Red, Green, Blue, Yellow, Cyan or Magenta to display only that color channel (simulating a filter of that color). This can be useful for calibration or measurement purposes.

  To restore the normal picture (all colors), select White.

Display Device - Auto Calibration: Auto Calibration is a process in which the projector quickly optimizes critical display parameters such as size, position and pixel tracking, based on the type of incoming video signal. Auto Calibration allows you to quickly get the image “in the ballpark” after which you can perform further calibration, if necessary.

To perform an Auto Calibration, do one of the following:

On the VX-44d/-55d Built-in Keypad (see Figure 2-3): Press **AUTO SETUP** followed by **ENTER**. When the Auto Setup completes, press **ENTER** again to keep the new settings.

On the DHD Controller Remote Control: Select **Display Device** from the Service Menu. Then, select **Auto Calibration** and set it to **Yes**.

What an “Auto Calibration” Does: Auto Calibration sets the following parameters to their default values:

- Contrast and Brightness
- Auto Input Level (off)
- Detail (if video source)
- Filter
- Luma Delay

Auto Calibration also optimizes the following settings, based on the characteristics of the incoming signal:

- Pixel Tracking
- Pixel Phase
- Size and Blanking
- Vertical Stretch
- Position
- Input Levels

If additional fine-tuning is necessary after performing an Auto Calibration, use the controls in the Picture menu (refer to page 58) or Calibration menu (refer to page 65).

Color Space: Select Color Space from the Service menu to choose the color space of the source signal for HDMI, RGB, and component connections.

- The default setting, **Auto**, functions as follows:
  - **HDMI:** If the Auxiliary Video Information (AVI) infoframe contains color space and/or range data, the DHD Controller uses that information. Otherwise, for RGB sources, the DHD Controller uses the **RGB-Video** color space. For component SDTV and EDTV resolutions, **REC601** is used. For other component video resolutions, **REC709** is used.
  - **RGB:** If Hsync or Vsync signals are present, the DHD Controller uses the **RGB-PC** color space. Otherwise, **REC601** is used for SDTV and EDTV sources, and **REC709** for all other sources.
  - **Component:** For SDTV and EDTV resolutions, the DHD Controller uses the **REC601** color space. For all other resolutions, REC709 is used.

In most cases, the **Auto** setting determines the correct color space to use. If it does not, you can force the DHD Controller to use a specific color space. Choose one of the following:

- **REC709** sets the color space matrix to that defined in ITU-R BT.709.
- **REC601** sets the color space matrix to that defined in ITU-R BT.601.
- **RGB-PC** uses RGB color space and sets black at 0,0,0 RGB and white at 255,255,255 RGB, assuming an 8-bit image.
- **RGB-Video** uses RGB color space and sets black at 16,16,16 RGB and white at 235,235,235, assuming an 8-bit image, to correspond to the luminance values defined in digital component standards.

Triggers: Select Triggers from the Service menu to configure the 12-volt trigger outputs. You can assign one or more trigger outputs to each aspect ratio. Those triggers are then activated by selecting that aspect ratio.

With an VX-44d/-55d/CineWide with AutoScope, assign at least one trigger output (the same one to which the lens motor is connected) to the Cinema and Virtual Cinema aspect ratios.

Miscellaneous: Select Miscellaneous from the Service menu to set the following options:

- **Language:** Select Language from the Miscellaneous menu and press the up- or down-arrows to select the OSD Language (English, Français, Deutsch, Italiano, Español, Svenska, Traditional Chinese, Simplified Chinese, Português or Russian).
- **OSD Timer:** Select OSD Timer from the Miscellaneous menu to set the OSD Timer, which controls how long the menus remain on-screen after selecting them. Select from 5 to 60 seconds, in one-second increments. Or, set the timer to 0 (disabled) if you want the menus to remain on-screen indefinitely.
- **OSD Messages:** When you select a new aspect ratio, input source or memory preset, the DHD Controller briefly displays an on-screen message confirming your new selection. To prevent the display of these messages, select OSD Messages from the Miscellaneous menu to and set it to Off.
- **Blank Screen Color:** Select Blank Screen Color from the Miscellaneous menu to select the color that appears when no incoming signal is present. The range is from 0 to 255 inclusive for each color component (red, green and blue).
- **Sidebar Color:** Select Sidebar Color from the Miscellaneous menu to change the color of the inactive image area. The range is from 0 to 255 inclusive for each color component (red, green and blue). The inactive image area is on either side of the active image area when using the 4:3 aspect ratio.
- **Film Mode:** Use Film Mode to smooth out moving images from interlaced, standard-definition (SD) sources. In most cases, the DHD Controller detects the proper “pull-down” rate and vertical frequency. However, if your source is jittery and/or tearing you may want to enable Film Mode to ensure stable processing for that source.
- **CUE (Chroma Upsampling Error) Correction:** Some DVD players use MPEG decoders that do not correctly “upsample” the 4:2:0 format chroma information on the DVD to the 4:2:2 or 4:4:4 format required by the video encoder of the display device.

  This so-called “chroma bug” sometimes causes streaky or spiky horizontal lines running through the chroma channel. It is most noticeable in static, interlaced scenes and on diagonal edges (especially red ones). Set CUE to On to correct this issue.

Sync Threshold: Select Sync Threshold to adjust the threshold at which negative pulses on the component video green/luma channel are interpreted to be sync pulses.

Sync Threshold adjustment is occasionally necessary when a DVD player or HDTV source signal drops “below black” (for example, during scenes with explosions or when subtitles are present) and causes the projector to temporarily lose sync. If the sync level from the source is persistently too low, the display device won’t sync with the source at all.

The range is from 0 (approximately 60 millivolts (mV)) to 15 (approximately 256 mV).

HDMI EDID Extension: Extended display identification data (EDID) is a data structure provided by a display device to describe its capabilities to a graphics card. It is what enables a modern personal computer to know what kind of monitor is connected.

Some modern display devices provide more information via EDID than others, in the form of “extensions.” Some computer graphics cards do recognize or properly interpret this extended EDID information.

Select HDMI EDID Extension from the Service menu to specify whether or not the EDID extensions from the display device are passed through to the sources connected to the HDMI 1 or HDMI 2 inputs. By default, the extensions are on. Change these settings only if HDMI EDID incompatibility issues arise.

Front Panel Brightness: Select Front Panel Brightness from the Service menu to adjust the brightness of the front-panel LED and LCD status indicators.

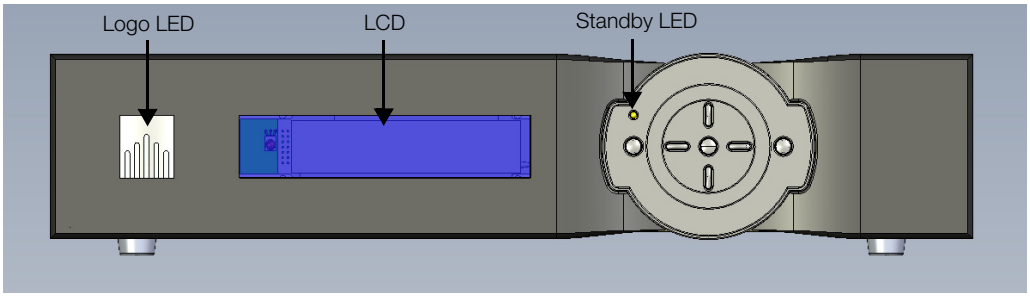

- **Logo LED:** Select Logo LED from the Front Panel Brightness menu to adjust the brightness of the large, illuminated logo on the left side of the display. The range is from 0 (off) to 31.
- **Standby LED:** Select Standby LED from the Front Panel Brightness menu to change the behavior of the front-panel STANDBY indicator LED. When set to ON, the LED lights amber when the system is in standby mode; otherwise, it is off. When set to OFF, the LED is always off.
- **LCD:** Select LCD from the Front Panel Brightness menu to adjust the brightness of the front-panel LCD. The range is from 0 (off) to 4.

System Reset: To reset ALL controller settings (including image settings) back to their factory defaults, choose System Reset from the Service menu.

A confirmation message appears. Select Yes to continue with the reset or select No to cancel.

Caution ***This action is not undoable. Proceed with caution!*** *Before you perform a System Reset, save your "Custom" Memory Presets (page 64) and ISF Day/Night Memory Presets (page 69).*

5. Maintenance and Troubleshooting

5.1 Lamp and Filter Replacement

The VX-44d/-55d uses a Cermax® Xenon lamp to deliver its high brightness. The lamp should be replaced when it reaches the end of its life (typically 1000 hours), or sooner if a noticeable degradation in brightness occurs. When you replace a lamp, you should replace the filters as well.

Keep track of the number of hours the lamp has been in use and be aware of any changes to brightness. These indicators will help you effectively maintain operation of the projector. To find out how long the currently-installed lamp has been in service, select Lamp Info from the Display Device - Configure menu (available by selecting **Service -> Display Device -> Configure -> Lamp Info**, in sequence).

➤ ***Lamp Replacement***

For lamp or filter replacement, please contact your nearest Runco authorized service center or Runco dealer. Do not attempt to replace the lamp yourself!

1. Turn off the projector and unplug the power cord. Allow the projector to cool down for approximately 45 minutes prior to removing the lamp assembly for replacement.
2. Loosen the two rear Lamp Cover screws (see Figure 5-1) and remove the cover.

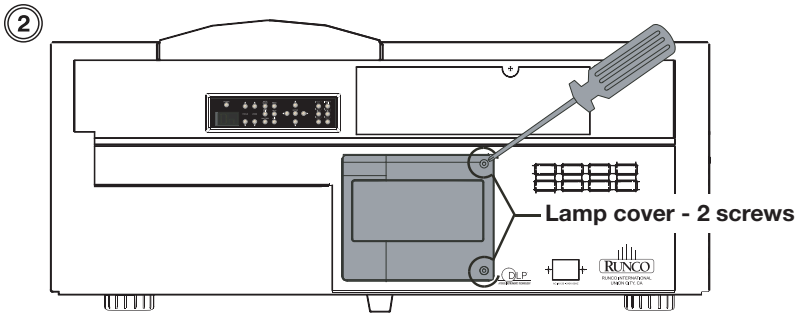

Figure 5-1. Removing the Lamp Door

3. Pull (out) and turn the lamp lock lever, which is located to the left of the lamp module, a quarter turn counterclockwise to the “unlock” position (Figure 5-2).

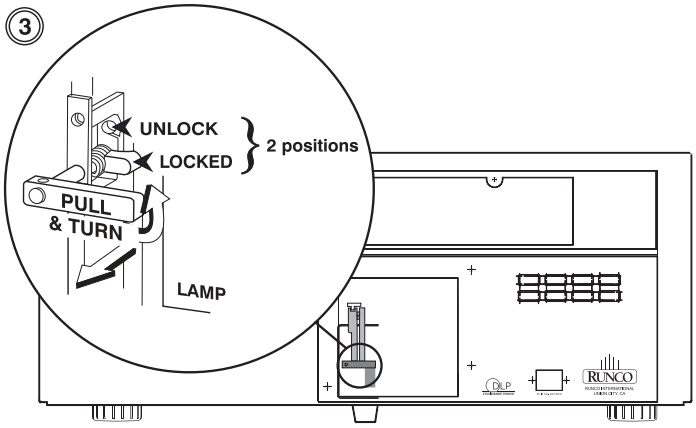

Figure 5-2. Unlocking the Lamp

4. Grasp the lamp by its housing only and pull it straight out (lamp slides along guides) until it's free; see Figure 5-3. Discard the lamp using safe disposal/recycling practices or contact your Runco dealer for a possible re-lamping program.

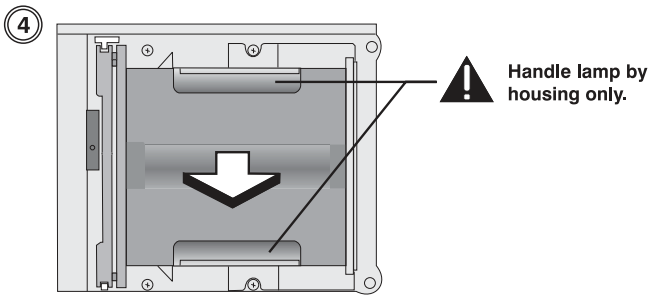

Figure 5-3. Removing the Lamp

5. Align the new lamp with the top and bottom guides on the left side of the lamp compartment; see Figure 5-4. Slide the lamp all the way in. A slightly harder push may be required right at the end to make sure it is fully seated into the terminal block. NOTE: The projector will not power up again if the lamp is not fully connected to the terminal block.

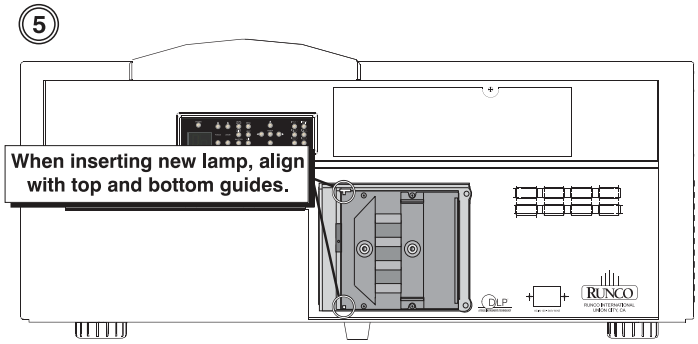

Figure 5-4. Installing A New Lamp

6. Pull (out) and turn the lamp lock lever (turned up in Step 3) a quarter turn clockwise to "lock" the lamp in place.

Note *If you can't turn the lamp lock into position, the lamp may not be fully inserted. In this case, partially remove the lamp and try pushing it back in again. Then, try switching the lock lever to the "lock" position.*

7. Replace the lamp door and secure it with the screws.
8. Re-attach the power cord to the projector and power it up.
9. **Record the New Lamp Serial Number:** Perform the steps listed in ***Lamp Hours Reset*** on page 73.

Note *Always record the serial number of a new lamp. Do this **only** if you have just installed a new lamp. This will ensure that the lamp timer is not reset on an old lamp and that the number of hours logged on the lamp is accurate.*

➤ *Filter Replacement*

Whenever you replace the lamp – or more often if the projector is installed in an extremely dusty environment – you should also replace the two filters located at the front and right side of the projector.

1. Loosen the six screws holding right side filter access panel in place. Then, remove the panel.

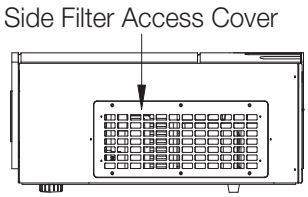

2. Loosen the two screws holding front filter access panel in place. Then, remove the panel.
3. Pull the filters out of the projector and discard. Do not reuse filters.
4. Insert the new filters with the wired side in.
5. Replace the filter access panels and tighten the screws to secure them.

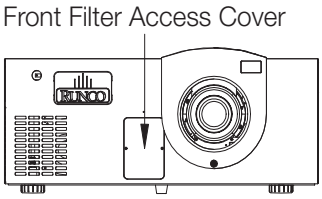

5.2 Lens Replacement

If you need to remove the lens – either to replace it or to prepare the projector for shipment – proceed as follows:

1. Power down the projector and wait five minutes to allow the lamp to cool.
2. Remove the secondary anamorphic lens, if present.
3. Place the lens cap on the installed lens to protect it from damage.
4. Press and hold the “lens release” button located in the top right corner of the lens panel.

5. Grasping the lens barrel, turn it in a counter-clockwise direction until it stops. Then, pull it forward to remove it (disconnects from the connector assembly).

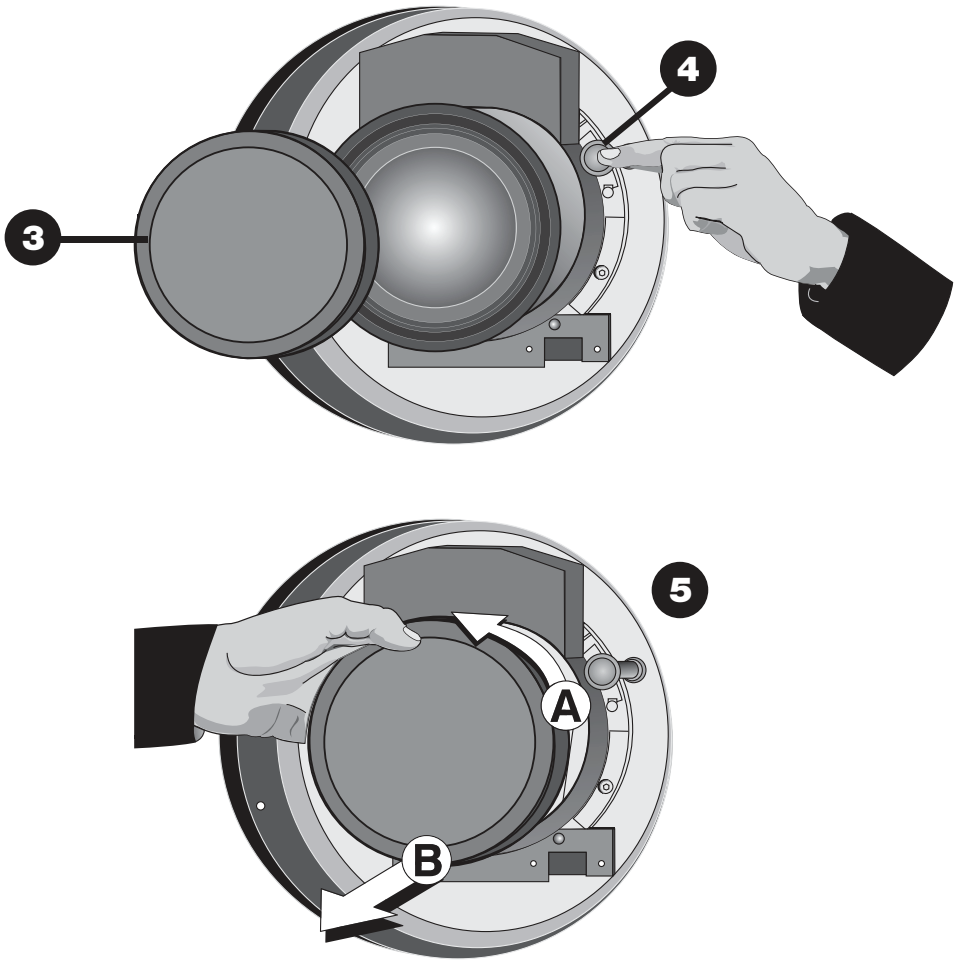

Note: The connector assembly moves as you turn the lens.

Figure 5-5. Removing the Primary Lens

5.3 Troubleshooting Tips

Table 5-1 provides some general guidelines for troubleshooting problems you may encounter with the VX-44d/-55d. If the suggested solutions fail to resolve the problem or if you encounter an issue not described here, please contact Runco Technical Support.

Table 5-1. Troubleshooting Chart

Symptom	Possible Cause(s)	Solution
The projector does not turn on after initial installation.	• The VX-44d/-55d is not plugged in or the AC outlet is not active. • The DHD Controller is not plugged in or the AC outlet is not active. • The remote control batteries have run out. • The serial connection from the DHD Controller to the VX-44d/-55d is incorrect.	• Ensure that the VX-44d/-55d is plugged in and that the AC outlet is active. • Ensure that the DHD Controller is plugged in and that the AC outlet is active. • Replace the batteries. • Ensure that the RS-232 output from the DHD Controller is properly connected to the RS-232C input on the VX-44d/-55d (see Figure 3-8).
The projector and DHD Controller are both on, but there is no picture and on-screen menus do not appear.	• Lens cover is on or shutter is closed. • Lamp failed to ignite. • Faulty or incorrect video connection between the DHD Controller and the VX-44d/-55d.	• Ensure that the lens cover is off and the shutter is open. • Ensure that the lamp door is closed. If it is and the problem persists, replace the lamp. • Ensure that the HDMI output from the DHD Controller is properly connected to Input 2 (DVI) on the VX-44d/-55d (see Figure 3-8).
The display is on and menus appear, but there is no picture.	• Incorrect source selection. • Source component is not turned on. • Source component is connected incorrectly or not at all.	• Select the correct source. • Turn on the source component. • Check connections from source component to DHD Controller.
A projected image from a DVD is split or otherwise scrambled.	• DVD player is connected to the Component input and set to progressive scan mode.	• Turn off progressive scan on the DVD player. Or, connect the DVD player to the HD1 or HD2 input.
Image appears “squeezed” or vertically stretched into center of screen.	• Incorrect aspect ratio selection.	• Select a different aspect ratio.

Table 5-1. Troubleshooting Chart (continued)

Symptom	Possible Cause(s)	Solution
The display is jittery or unstable.	• Poor-quality or improperly connected source. • The horizontal or vertical scan frequency of the input signal may be out of range for the projector.	• Ensure that the source is properly connected and of adequate quality for detection. • Correct at the source.
Image is too bright and/or lacks definition in the bright areas of the image.	• Contrast is set too high.	• Lower the contrast setting.
Image appears “washed out” and/or dark areas appear too bright.	• Brightness is set too high.	• Lower the brightness setting.
Colors in the image are swapped; for example, reds appear blue or vice versa.	• The Red/Pr, Green/Y or Blue/Pb outputs from the source are connected to the wrong inputs on the DHD Controller.	• Ensure that the source outputs are connected to the correct DHD Controller input.
The display freezes suddenly.	• Excessive voltage noise on the AC or ground input has interrupted the projector’s ability to lock on to a signal.	• Power down the projector and disconnect from AC. Then, plug in again and power up as usual.
The projector will not turn back on after it was powered down, or the image disap-pears during operation.	• The projector will not turn on for two minutes after power-down, to protect the lamp. • The lamp has failed.	• Wait until the LED at the front of the DHD Controller turns red. • Replace the lamp.
AutoScope lens motor does not work.	• The motor is not plugged in or the AC outlet is not active. • The motor is not connected to a trigger output on the DHD Controller. • Incorrect trigger assignment.	• Ensure that the motor is plugged in and that the AC outlet is active. • Check the trigger connection between the lens motor and DHD Controller (Figure 3-15). • Correct the trigger assignment (refer to ***Configure Lens Motor Trigger (CineWide with AutoScope)*** on page 43).

➤ *Error Codes*

If the status code display on the back of the projector shows one of the following values, you have encountered a likely system error requiring the attention of a qualified service technician. Acknowledge and clear the error by pressing **EXIT** twice on the built-in keypad. Try resetting the projector by powering it off, allowing it to cool and powering it on again. Refer to Table 5-2 and contact your dealer if the problem persists.

The specific code number identifies the source of the error detected, and is particularly useful in cases where the projector is far away. For example, the code “27” means the lamp could not be turned on.

Table 5-2. VX-44d/-55d Error Codes

Code	Description
General	
12	Software bug. Contact dealer or Runco Technical Support.
13	CRC error in flash ROM. Download new software.
14	Engineering-only programming is complete. Contact Runco, replace TIPM.
15	Attempting to download code without being in boot mode.
16	Invalid interrupt. Power off/on. If it persists, contact dealer or Runco Technical Support.
17	User forced system to stay in boot mode.
18	Jumper for programming boot not installed.
Lamp Failures	
20	Lamp turned on unexpectedly (fault related to ballast).
21	Lamp airflow low, overheating imminent.
23	Cannot read valid ballast ID.
26	Lamp 1 Interlock: lamp door open, lamp not installed.
27	Can’t turn lamp on.
28	Lamp turned off unexpectedly.
29	Lamp ballast overheated.

Note: *To clear a system error, press the **EXIT** key (on the projector’s built-in keypad) twice. If necessary, reset the projector by powering it off, allowing it to cool and powering it on again. Contact your Runco dealer or Runco technical support if the error persists.*

Table 5-2. VX-44d/-55d Error Codes (continued)

Code	Description
Power and Cooling	
46	Red DMD heat sink overheated.
47	Green DMD heat sink overheated.
48	Blue DMD heat sink overheated.
49	Prism overheated.
4C	Projector shutdown due to critical error.
C0	Lamp blower failure (lamp not turned on).
51	LVPS fan failed (Fan 1).
52	LVPS/Red cooling fan failed (Fan 2).
53	DC lamp fan failed (VX-44d; Fan 3).
54	Red DMD heatsink fan failed (Fan 4).
55	Green DMD heatsink fan failed (Fan 5).
56	Blue DMD heatsink fan failed (Fan 6).
57	TIPM fan failed (Fan 7).
58	TIPM fan failed (Fan 8).
TIPM (Image Processor)	
60	Boot code CRC failed.
61	Unable to program DigMux PLD.
62	Unable to program Control PLD.
63	Unable to program Bubks PLD.
64	Unrecognized ROM type.
65	Write to flash ROM failed.
66	TIPM failure.
67	Downloaded code will not fit.
68	Scaler communication problem.
Built-In Keypad	
70	Unable to access EEPROM on the built-in keypad.
71	EEPROM memory re-initialization on the built-in keypad.

Note: *To clear a system error, press the* ***EXIT*** *key (on the projector's built-in keypad) twice. If necessary, reset the projector by powering it off, allowing it to cool and powering it on again. Contact your Runco dealer or Runco technical support if the error persists.*

Table 5-2. VX-44d/-55d Error Codes (continued)

Code	Description
Panel Driver and Formatter	
80	Unrecognized Panel Driver.
81	Unable to program device on Panel Driver.
82	TI flash download failure.
83	TI flash download failure.
84	TI flash download failure.
85	TI-I2C write failure.
86	One or more formatters not responding; probable formatter software fault.
87	Formatter reports RDRAM failure.
88	Red modular Formatter communication failure.
89	Green modular Formatter communication failure.
8A	Blue modular Formatter communication failure.
93	Modular formatter architecture error.
94	Modular formatter DMD mismatch.
95	Modular formatter sequence mismatch.
Miscellaneous	
A0	Unable to program the optional module.
A1	Unable to power the optional module.
A2	Unable to program the Dual Slot Backplane Module (DSBP).
A3	Unable to program the optional Post Processing Module (Warp module).

Note: *To clear a system error, press the* ***EXIT*** *key (on the projector's built-in keypad) twice. If necessary, reset the projector by powering it off, allowing it to cool and powering it on again. Contact your Runco dealer or Runco technical support if the error persists.*

Notes:

6. External Control

In addition to using the DHD Controller front-panel keypad or remote control unit, there are two methods of controlling the VX-44d/-55d and DHD Controller externally:

- Using a serial (RS-232) link to send ASCII commands and receive responses to those commands.
- Using discrete infrared (IR) codes to program a third-party remote control unit.

The following sections describe both of these methods.

6.1 Serial Communications

The DHD Controller uses a simple text-based control protocol to take requests from control devices and to provide responses to such devices. This section describes how to send control messages over a serial link between the DHD Controller and an automation/control system or a PC running terminal emulation software.

RS-232 Connection and Port Configuration

To interface the DHD Controller with an automation/control system or a PC running terminal emulation software, connect it to your control system or PC as shown in Figure 3-15.

Configure the RS-232 controller or PC serial port as follows: no parity, 8 data bits, 1 stop bit and no flow control. Set the baud rate to 19200, to match that of the DHD Controller RS-232 port.

Serial Command Syntax

Serial commands to the DHD Controller take the following form:

- Commands are not case-sensitive.
- For a single command that takes no parameters, type the command followed by a carriage return; for example, to set the aspect ratio to Letterbox, type `LETTERBOX` **<Enter>**.
- For a single command that takes a parameter, type the command, a space or a comma and the desired value followed by a carriage return; for example, to set the brightness to -10, type `BRIGHTNESS -10` **<Enter>** or `BRIGHTNESS,-10` **<Enter>**.
- You can also send a string of multiple commands on a single line, separated by commas. For example, `COMPOSITE,BRIGHTNESS 50,16:9` **<Enter>** switches to the Composite video input, sets the brightness to 50 and sets the aspect ratio to 16:9. Command strings can be up to 255 characters long.

Note

Avoid combining the `ON` *or* `POWER 1` *commands with other commands on a single line. After sending* `ON` *or* `POWER 1,` *allow at least five (5) seconds for the DHD Controller to power up. If you have enabled the ISF splash screen (refer to* ***Splash Configure*** *on page 70), allow 15 seconds for the DHD Controller to power up.*

Once it does, it will accept and properly execute multiple serial commands.

Table 6-1 lists the RS-232 command set. The “Parameter (min/max)” column shows the valid parameter ranges, or “NA” for commands that take no parameters.

When you enter a valid command, the DHD Controller executes it and acknowledges it with a plus sign on the command line (+ >). When you enter an invalid command – one that is misspelled or followed by values outside the valid range for that command – the DHD Controller ignores it and returns a minus sign (- >).

Table 6-1. Serial Commands

Command	Parameter (min/max)	Value Stored?	Description
Power On/Off Commands			
OFF	NA	NA	Turns projector off
ON	NA	NA	Turns projector on
POWER	0/1	NA	Turns projector on and off
POWER?	NA	NA	Returns power status
Input Selection Commands			
COMPONENT	NA	YES	Selects the Component input
COMPOSITE	NA	YES	Selects the Composite video input
HDMI1	NA	YES	Selects the HDMI 1 input
HDMI2	NA	YES	Selects the HDMI 2 input
HD1	NA	YES	Selects the RGB HD 1 input
HD2	NA	YES	Selects the RGB HD 2 input
INPUT?	NA	NA	Returns active input
SCART	NA	YES	Selects the SCART input
SVIDEO1	NA	YES	Selects the S-Video 1 input
SVIDEO2	NA	YES	Selects the S-Video 2 input
Aspect Ratio Commands			
16:9	NA	YES	Selects the 16:9 aspect ratio
4:3	NA	YES	Selects the 4:3 aspect ratio
ASPECT?	NA	NA	Returns current aspect ratio
CINEMA	NA	YES	Selects the Cinema aspect ratio
LETTERBOX	NA	YES	Selects the Letterbox aspect ratio
NATIVE	NA	YES	Selects the Native aspect ratio
VIRTUALWIDE	NA	YES	Selects the VirtualWide aspect ratio
VIRTUALCINEMA	NA	YES	Selects the Virtual Cinema aspect ratio

Table 6-1. Serial Commands (continued)

Command	Parameter (min/max)	Value Stored?	Description
Picture Adjust Commands			
BRIGHTNESS	-50/50	YES	Sets a value for brightness
BRIGHTNESS?	NA	NA	Returns brightness setting value
CHROMADELAY	-7/7	YES	Sets a value for input color chroma delay
CHROMADELAY?	NA	NA	Returns input color chroma delay setting
COLOR	-50/50	YES	Sets a value for color
COLOR?	NA	NA	Returns color setting value
CONTRAST	-50/50	YES	Sets a value for contrast
CONTRAST?	NA	NA	Returns contrast setting value
FILMMODE	0/1	YES	Sets Film Mode off (0) or on (1)
FILMMODE?	NA	NA	Returns Film Mode setting (0 = off; 1 = on)
FILTER	0/10	YES	Sets a value for input color noise filter
FILTER?	NA	NA	Returns input color noise filter setting
PHASE	0/31	YES	Adjusts phase
PHASE?	NA	NA	Returns phase setting value
SHARPNESS	-50/50	YES	Sets a value for sharpness
SHARPNESS?	NA	NA	Returns sharpness setting value
TINT	-50/50	YES	Sets a value for tint
TINT?	NA	NA	Returns tint setting value
Image Preset Commands			
CUSTOM or CUSTOM1	NA	YES	Loads “Custom” image preset
THX or CUSTOM2	NA	YES	Loads “THX” image preset
DAY	NA	YES	Loads “ISF Day” image preset
NIGHT	NA	YES	Loads “ISF Night” image preset
PRESET?	NA	NA	Returns currently-selected preset (ISF Day, ISF Night, Custom or THX)

Table 6-1. Serial Commands (continued)

Command	Parameter (min/max)	Value Stored?	Description
Input Position Commands			
IHEIGHT	0/20	YES	Sets the value for input height
IHEIGHT?	NA	NA	Returns input height value
IHPOS	-50/50	YES	Sets a value for horizontal input position
IHPOS?	NA	NA	Returns input horizontal position value
IVPOS	-50/50	YES	Sets a value for vertical input position
IVPOS?	NA	NA	Returns input vertical position value
IWIDTH	0/50	YES	Sets the value for input width
IWIDTH?	NA	NA	Returns input horizontal width value
OVERSCAN	0/20	YES	Sets the overscan percentage
OVERSCAN?	NA	NA	Returns overscan percentage
OVERSCANMODE	0/1	YES	Sets the overscan mode (0=zoom; 1=crop)
OVERSCANMODE?	NA	NA	Returns the overscan mode (0=zoom; 1=crop)
Output Shift Commands			
OHEIGHT	-50/50	YES	Sets the value for output height
OHEIGHT?	NA	NA	Returns output height value
OHPOS	-50/50	YES	Sets the value for output horizontal position
OHPOS?	NA	NA	Returns output horizontal position value
OVPOS	-50/50	YES	Sets the value for output vertical position
OVPOS?	NA	NA	Returns output vertical position value
OWIDTH	-50/50	YES	Sets the value for output width
OWIDTH?	NA	NA	Returns output horizontal width value

Table 6-1. Serial Commands (continued)

Command	Parameter (min/max)	Value Stored?	Description
Miscellaneous Commands			
DISPLAY?	NA	NA	Returns display device input source value, as follows: 1 = Auto 10 = VX-44d 11 = VX-55d
HWVER?	NA	NA	Returns hardware version number
INRES?	NA	NA	Returns input resolution
MODEL?	NA	NA	Returns product model name
OUTRES?	NA	NA	Returns output resolution
SERNUM?	NA	NA	Returns DHD Controller serial number
SWVER?	NA	NA	Returns software version number
SYSSTATE?	0/4	NA	Returns current system state 0 = Off 1 = Initializing 2 = On 3 = Powering Down 4 = Error
TRIGGER	1/3	YES	Assigns trigger to currently-selected aspect ratio
The following serial commands are meant to emulate buttons on the remote control or DHD Controller front panel. Each button has its own serial command, so effectively it is as if you were using the IR remote only you'll be doing so via serial commands. These commands provide active OSD responses just like the IR remote.			
DOWN	NA	NA	Down-Arrow (▼) key
ENTER	NA	NA	**ENTER** key
EXIT	NA	NA	**EXIT (RETURN)** key
LEFT	NA	NA	Left-Arrow (◀) key
MENU	NA	NA	**MENU**
RIGHT	NA	NA	Right-Arrow (▶) key
UP	NA	NA	Up-Arrow (▲) key

6.2 Using Discrete IR Codes

The DHD Controller accepts commands in the form of IR signals that conform to the Phillips RC5 protocol. Each DHD Controller remote control button has an RC5 control code associated with it.

You can use these codes to program a third-party, “universal” remote control unit to work with the DHD Controller. These third-party products usually come with a computer software application for this purpose. For more information, consult the documentation provided with the remote control unit.

IR Command Protocol ➤

The IR control codes have the following characteristics:

- Each code consists of 14 bits:
  - Two (2) **start bits** (always 1);
  - A **toggle bit.** This bit is inverted every time a key is released and pressed again. This allows the DHD Controller to distinguish between a button that remains down or is pressed repeatedly.
  - Five (5) **address bits**. The default address is **17** (binary 10001). To change it, select Remote Control from the Service menu and follow the steps given on page 71.
  - Six (6) **data bits**.
- The carrier frequency is 36 kHz, with the modulated pulses having a 25% duty cycle.
- Commands are sent at a maximum rate of 9 Hz.

For example, here is the RC5 control code for the **ON** button on the DHD Controller remote control unit (assuming the default address is used):

With Toggle Bit = 0														
Hex	**3**		**4**				**4**				**1**			
Binary	1	1	0	1	0	0	0	1	0	0	0	0	0	1
With Toggle Bit = 1														
Hex	**3**		**C**				**4**				**1**			
Binary	1	1	1	1	0	0	0	1	0	0	0	0	0	1
Function	**Start Bits**		**Toggle Bit**	**Address**					**Command**					

Figure 6-1 shows the pulse train for this command (with the toggle bit set to zero).

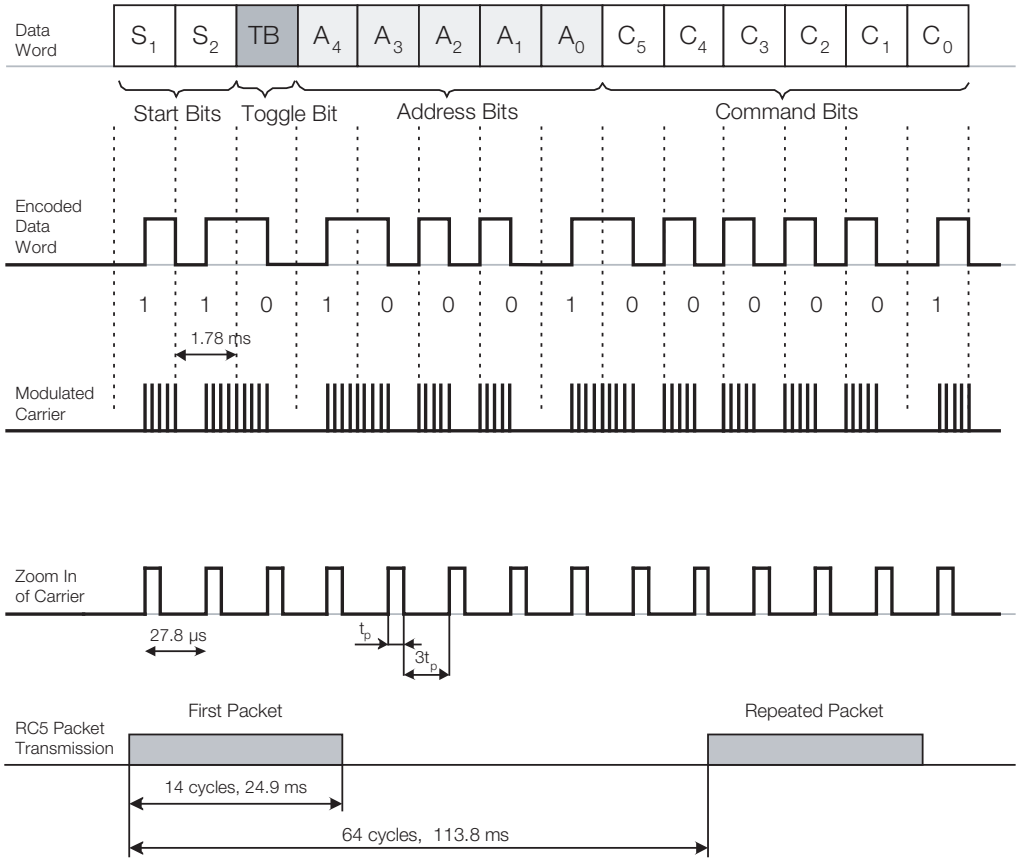

Figure 6-1. RC5 Message Format

Table 6-2 lists the RC5 control codes for the DHD Controller.

◄ ***IR Command List***

Table 6-2. RC5 Control Codes for the DHD Controller

Remote Control Button Name	RC5 Data from Remote Control (Note)	RC5 Data with Toggle Bit = 1 (Note)	Description
(none)	0x346E	0x3C6E	Native aspect ratio
(none)	0x3457	0x3C57	SCART video input
16:9	0x3449	0x3C49	16:9 aspect ratio
4:3	0x344A	0x3C4A	4:3 aspect ratio
CINEMA	0x346C	0x3C6C	Cinema aspect ratio
COMP	0x344E	0x3C4E	Component video input

Note: *These codes assume that the default address of 17 is used. If you change it to something other than 17, you will need to modify these codes accordingly.*

Table 6-2. RC5 Control Codes for the DHD Controller (continued)

Remote Control Button Name	RC5 Data from Remote Control (Note)	RC5 Data with Toggle Bit = 1 (Note)	Description
CUST 1	0x3472	0x3C72	Custom 1 memory preset
CUST 2	0x3473	0x3C73	Custom 2 memory preset
DOWN	0x3446	0x3C46	Down-Arrow (▼)
ENTER	0x3444	0x3C44	**ENTER**
EXIT	0x3474	0x3C74	**EXIT (RETURN)**
HD 1	0x3451	0x3C51	HD1 video input
HD 2	0x3452	0x3C52	HD2 video input
HDMI 1	0x3453	0x3C53	HDMI1 video input
HDMI 2	0x3454	0x3C54	HDMI2 video input
ISF DAY	0x3471	0x3C71	ISF Day memory preset
ISF NIGHT	0x3470	0x3C70	ISF Night memory preset
LEFT	0x3447	0x3C47	Left-Arrow (◀)
LET BOX	0x344B	0x3C4B	Letterbox aspect ratio
MENU	0x3443	0x3C43	**MENU**
OFF	0x3442	0x3C42	Power off
ON	0x3441	0x3C41	Power on
RIGHT	0x3448	0x3C48	Right-Arrow (▶)
SVC	0x346D	0x3C6D	Virtual Cinema aspect ratio
S-VID 1	0x344F	0x3C4F	S-Video 1 video input
S-VID 2	0x3450	0x3C50	S-Video 2 video input
UP	0x3445	0x3C45	Up-Arrow (▲)
VIDEO	0x344D	0x3C4D	Composite video input
V-WIDE	0x344C	0x3C4C	VirtualWide aspect ratio

Note: *These codes assume that the default address of 17 is used. If you change it to something other than 17, you will need to modify these codes accordingly.*

7. Specifications

7.1 VX-44d/-55d Specifications

Table 7-1 lists the VX-44d/-55d specifications.

Table 7-1. VX-44d/-55d Specifications

Projector Type:	Digital Light Processing (DLP), 3-chip, 16:9 SuperOnyx DMD
Native Resolution:	1920 x 1080 (16:9)
Aspect Ratios:	Refer to Table 7-2
Video Standards:	Refer to Table 7-2
DTV Compatibility:	480p, 720p, 1080i, 1080p
Scan Frequency:	Horizontal: 15 kHz to 120 kHz Vertical: 23.97 Hz to 150 Hz
Picture Size (16:9 Screen):	**VX-44d:** Recommended width = 72 to 192 in. Maximum width = 300 in. **VX-55d:** Recommended width = 72 to 240 in. Maximum width = 350 in.
Throw Distance (Factor x Screen Width):	Refer to Table 3-3
Horizontal and Vertical Offset:	Refer to Table 3-4
Lamp:	**VX-44d:** 1,000 Watt Xenon lamp module **VX-55d:** 1,200 Watt Xenon lamp module
Estimated Lamp Life:	1,000 hours
Inputs:	(1) DVI-I with HDCP (from DHD Controller) (1) RS-232 (from DHD Controller)
Controls:	- Built-in keypad - IR remote - Serial commands via RS-232 (from DHD Controller)

Table 7-1. VX-44d/-55d Specifications (continued)

Brightness and Contrast:	**Cinema Standards Measurement System (CSMS) Specifications** - Brightness: 87.0 foot-Lamberts (fL) (VX-44d); 107.0 fL (VX-55d) - Contrast Ratio (variable, based on lens aperture setting): 230:1 - 280:1 (VX-44d); 222:1 - 278:1 (VX-55d) These measurements are taken from the projector in a controlled theater environment. All measurements are made to ANSI/NAPM IT7.228-1997 specifications using the Photo Research PR-650 SpectraColorimeter and Minolta LS-100 Luminance Meter, Video Essentials test DVD and a 1.3 gain, 72-inch wide screen. The projector is calibrated to a color temperature of 6,500K and has a minimum of 150 hours of usage. The foot-Lambert (fL) is the unit of measurement used in commercial movie theaters to express image brightness at the screen surface. The Society of Motion Picture and Television Engineers (SMPTE) specifies 16 fL as the target image brightness for film-based projectors using an open gate (without film in the projector). More importantly, today SMPTE specifies 12 fL as the target image brightness in Digital Cinema theaters. The foot-Lambert measurement is dependent on screen size, screen gain and projector light output. **Theater Calibration Specifications** - Light Output: 2780 ANSI Lumens (VX-44d); 3475 ANSI Lumens (VX-55d) - Contrast Ratio (variable, based on lens aperture setting): 230:1 - 280:1 (VX-44d); 222:1 - 278:1 (VX-55d) These specifications are obtained by calibrating the projector as described above for CSMS measurements. **Industry-Standard Specifications** - Light Output: 4000 ANSI Lumens (VX-44d); 6000 ANSI Lumens (VX-55d); - Contrast Ratio (variable, based on lens aperture setting): 1500 - 2000:1 These are typical projector brightness and contrast specifications found in most companies' sales literature. Runco includes these measurements in its literature to allow for direct comparison with other manufacturers' projectors. These measurements are typically taken at 9,000K to 13,000K to get expected performance data when the projector is used in professional, commercial and industrial displays.
Power Requirements:	**VX-44d:** 100 to 240 VAC (auto-sensing), 50/60 Hz, 1,650 Watts (5631.4 BTUs/hour) **VX-55d:** 200 to 240 VAC, 50/60 Hz, 2,100 Watts (7167.3 BTUs/hour)
Operating Environment:	41°F to 95°F (5°C to 35°C), 20% to 80% humidity (non-condensing)
Dimensions:	See Figure 7-1
Weight (without lens):	**VX-44d:** 120 lbs. (54.43 kg) **VX-55d:** 130 lbs. (58.97 kg)
Regulatory Approvals:	Complies with FCC (Class A), CE, C-Tick

Table 7-1. VX-44d/-55d Specifications (continued)

Limited Warranty:	Projector: Two (2) years parts and labor from the date of delivery to the end user. Lamp: 1000 hours or six (6) months, whichever comes first.
Specifications are subject to change without notice.	

7.2 DHD Controller Specifications

Table 7-2 lists the DHD Controller specifications.

Table 7-2. DHD Controller Specifications

Aspect Ratios:	4:3, Letterbox, 16:9, VirtualWide, Cinema, Virtual Cinema, Native
Video Standards:	NTSC, PAL
Inputs:	(1) Composite (2) S-Video (1) Component/RGBHV/SCART (5 x RCA) (2) Component/RGBHV (5 x BNC) (2) HDMI 1.3 with HDCP
Output:	HDMI 1.3 with HDCP
Control Options:	- Discrete infrared remote - Serial commands via RS-232 - Front-panel controls
RS-232 Communication Parameters:	19200 bps, no parity, 8 data bits, 1 stop bit, no flow control
Trigger Outputs:	(3) +12 VDC, each rated at 250 mA and thermal fuse-protected
Bandwidth:	150 Mega Samples per Second (MSPS)
Power Requirements:	100 to 240 VAC (auto-sensing), 50/60 Hz, 160 watts
Operating Environment:	41°F to 95°F (5°C to 35°C), 0% to 90% humidity (non-condensing)
Dimensions:	Width = 17.50 inches (444.5 mm) Depth = 11.19 inches (284.1 mm) Height = 3.75 inches (95.3 mm)
Weight:	13.0 lbs. (5.90 kg)
Regulatory Approvals:	Complies with FCC, CE C-Tick
Limited Warranty:	Two (2) years parts and labor from the date of delivery to the end user.
Specifications are subject to change without notice.	

7.3 VX-44d/-55d Dimensions

Figure 7-1 shows the VX-44d/-55d dimensions (all dimensions are in inches).

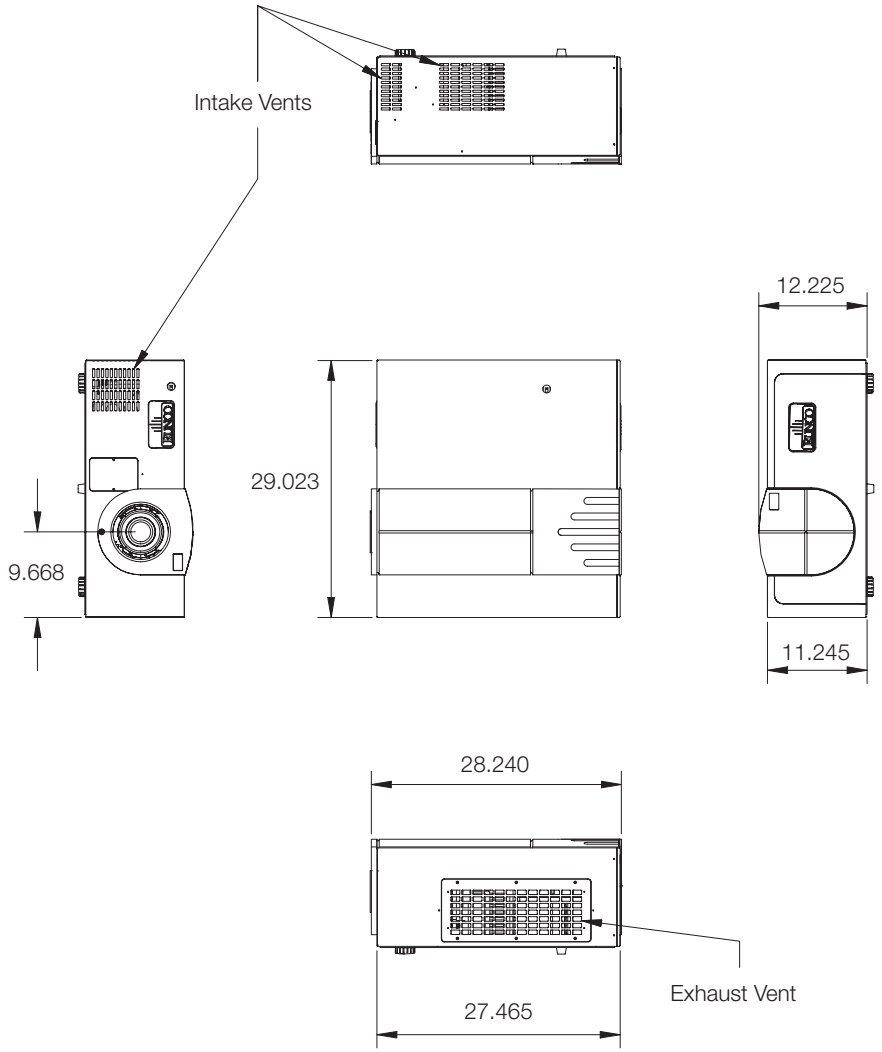

Figure 7-1. VX-44d/-55d Dimensions

7.4 Supported Timings

Table 7-3 lists the signal types supported by each input on the DHD Controller.

Table 7-3. Supported Signal Timings by Input

Format	Resolution	Refresh Rate (Hz)	Horizontal Frequency (kHz)	Pixel Frequency (MHz)	Supported? (√ = Yes, – = No)					
					HD1 HD2	HDMI 1 HDMI 2	Component/ RGBHV	SCART	S-Video 1 S-Video 2	Video
640x480	640x480	60.00	31.469	25.175	√	√	√	–	–	–
		66.59	35.892	29.862	√	√	√	–	–	–
		72.00	37.861	31.500	√	√	√	–	–	–
		75.00	37.500	31.500	√	√	√	–	–	–
		85.00	43.269	36.000	√	√	√	–	–	–
800x600	800x600	60.00	37.879	40.000	√	√	√	–	–	–
		72.00	48.077	50.000	√	√	√	–	–	–
		75.00	46.875	49.500	√	√	√	–	–	–
		85.00	53.674	56.250	√	√	√	–	–	–
832x624	832x624	74.54	52.849	60.036	√	√	√	–	–	–
848x480	848x480	47.95	25.270	27.089	√	√	√	–	–	–
		60.00	31.020	33.750	√	√	√	–	–	–
1024x768	1024x768	60.00	48.363	65.000	√	√	√	–	–	–
		70.00	56.476	75.000	√	√	√	–	–	–
		75.00	60.023	78.750	√	√	√	–	–	–
		85.00	68.677	94.500	√	√	√	–	–	–
1152x864	1152x864	75.00	67.500	108.000	√	√	√	–	–	–
1280x720	1280x720	47.95	37.833	64.769	√	√	√	–	–	–
1280x768	1280x768	60.00	47.396	68.250	√	√	√	–	–	–
		60.00	47.776	79.500	√	√	√	–	–	–
		75.00	60.289	102.250	√	√	√	–	–	–
		85.00	68.633	117.500	√	√	√	–	–	–
1280x960	1280x960	60.00	60.000	108.000	√	√	√	–	–	–
		85.00	85.938	148.500	√	√	√	–	–	–

Table 7-3. Supported Signal Timings by Input (continued)

Format	Resolution	Refresh Rate (Hz)	Horizontal Frequency (kHz)	Pixel Frequency (MHz)	Supported? (√ = Yes, – = No)					
					HD1 HD2	HDMI 1 HDMI 2	Component/ RGBHV	SCART	S-Video 1 S-Video 2	Video
1280x1024	1280x1024	60.00	63.981	108.000	√	√	√	–	–	–
		75.00	79.976	135.000	√	√	√	–	–	–
		85.00	91.146	157.500	√	√	√	–	–	–
1360x768	1360x768	60.00	47.712	85.500	√	√	√	–	–	–
1400x1050	1400x1050	60.00	64.744	101.000	√	√	√	–	–	–
		60.00	65.317	121.750	√	√	√	–	–	–
		75.00	82.278	156.000	√	√	√	–	–	–
1600x1200	1600x1200	60.00	75.000	162.000	√	√	√	–	–	–
1680x1050	1680x1050	60.00	64.674	119.000	√	√	√	–	–	–
1920x1080	1920x1080	47.95	56.821	150.007	√	√	√	–	–	–
1920x1200	1920x1200	60.00	74.038	154.000	√	√	√	–	–	–
SCART RGBS	–	50.00	–	–	–	–	–	√	–	–
480/60i	720x487	59.94	15.734	13.500	√	√	√	–	–	–
480/60p	720x483	59.94	31.469	27.000	√	√	√	–	–	–
576/50i	720x576	50.00	15.625	14.750	√	√	√	–	–	–
576/50p	720x576	50.00	31.250	29.000	√	√	√	–	–	–
720/24p	1280x720	23.98/24.00	17.982/18.000	59.341/59.400	√	√	√	–	–	–
720/25p	1280x720	25.00	18.750	74.250	√	√	√	–	–	–
720/30p	1280x720	29.97/30.00	22.478/22.500	74.175/74.250	√	√	√	–	–	–
720/50p	1280x720	50.00	37.500	75.250	√	√	√	–	–	–
720/60p	1280x720	60.00	45.000	74.250	√	√	√	–	–	–
1080/50i	1920x1080	50.00	28.125/31.250	74.250/72.000	√	√	√	–	–	–
1080/60i	1920x1080	59.94/60.00	33.716/33.750	74.175/74.250	√	√	√	–	–	–
1080/24p	1920x1080	23.98/24.00	26.978/27.000	74.175/74.250	√	√	√	–	–	–
1080/50p	1920x1080	50.00	56.250	148.500	√	√	√	–	–	–
1080/60p	1920x1080	59.94/60.00	67.433/67.500	148.350/148.500	√	√	√	–	–	–
NTSC 3.58	–	59.94/60.00	15.734/15.750	3.580	–	–	–	–	√	√
NTSC 4.43	–	59.94/60.00	15.734/15.750	4.430	–	–	–	–	√	√
PAL-B/G/H/I	–	50.00	15.625	4.430	–	–	–	–	√	√

Table 7-3. Supported Signal Timings by Input (continued)

Format	Resolution	Refresh Rate (Hz)	Horizontal Frequency (kHz)	Pixel Frequency (MHz)	Supported? (√ = Yes, – = No)					
					HD1 HD2	HDMI 1 HDMI 2	Component/ RGBHV	SCART	S-Video 1 S-Video 2	Video
PAL-M	–	59.94/60.00	15.734/15.750	3.580	–	–	–	–	√	√
PAL-N	–	50.00	15.625	3.580	–	–	–	–	√	√
SECAM	–	50.00	15.625	13.500	–	–	–	√	√	√

Notes:

020-0826-02 Rev. B
April 2009