myprojectorlamps.com

The most trusted, dependable name in projector lamp sales.

http://www.myprojectorlamps.com

http://www.myprojectorlamps.ca

http://www.myprojectorlamps.eu

The following projector manual has not been modified or altered in any way.

OWNER'S OPERATING MANUAL

VX-40d / VX-50d
VX-60d / VX-80d

Digital Light Processing™ Projector
and DHD Controller

Software Version 2.00

THE WORLD'S FINEST HOME THEATER PRODUCTS™

TWO YEAR LIMITED WARRANTY

For Projectors, Video Processors and Controllers

Congratulations on your purchase of a Runco video product and welcome to the Runco family! We believe Runco produces "The World's Finest Home Theater Products." With proper installation, setup and care, you should enjoy many years of unparalleled video performance.

This is a LIMITED WARRANTY as defined in the Magnuson-Moss Warranty Act. Please read it carefully and retain it with your other important documents.

WHAT IS COVERED UNDER THE TERMS OF THIS LIMITED WARRANTY:

SERVICE LABOR: Runco will pay for service labor by a Runco Authorized Service Center when needed as a result of manufacturing defect for a period of two (2) years from the effective date of delivery to the end user (excluding the lamp).

PARTS (not including the lamp): Runco will provide new or rebuilt replacement parts for the parts that fail due to defects in materials or workmanship for a period of two (2) years from the effective date of delivery to the end user. Such replacement parts are then subsequently warranted for the remaining portion (if any) of the original warranty period.

PROJECTOR LAMP: Runco will pay for service labor by a Runco Authorized Service Center when needed as a result of a manufacturing defect for a period of six (6) months or 1000 hours, whichever comes first, from the effective date of delivery to the end user. In addition, Runco will provide a new or rebuilt replacement lamp for the lamp that fails due to defects in materials or workmanship for a period of six (6) months or 1000 hours, whichever comes first, from the effective date of delivery to the end user. Such replacement lamps are then subsequently warranted for the remaining portion (if any) of the original warranty period.

WHAT IS NOT COVERED UNDER THE TERMS OF THIS LIMITED WARRANTY:

This Limited Warranty only covers failure due to defects in materials and workmanship that occur during normal use and does not cover normal maintenance. This Limited Warranty does not cover cabinets or any appearance items; failure resulting from accident, misuse, abuse, neglect, mishandling, misapplication, faulty or improper installation or setup adjustments; improper maintenance, alteration, improper use of any input signal; damage due to lightning or power line surges, spikes and brownouts; damage that occurs during shipping or transit; or damage that is attributed to acts of God. In the case of remote control units, damage resulting from leaking, old, damaged or improper batteries is also excluded from coverage under this Limited Warranty.

CAUTION: THIS LIMITED WARRANTY ONLY COVERS RUNCO PRODUCTS PURCHASED FROM RUNCO AUTHORIZED DEALERS. ALL OTHER PRODUCTS ARE SPECIFICALLY EXCLUDED FROM COVERAGE UNDER THIS WARRANTY. MOREOVER, DAMAGE RESULTING DIRECTLY OR INDIRECTLY FROM IMPROPER INSTALLATION OR SETUP IS SPECIFICALLY EXCLUDED FROM COVERAGE UNDER THIS LIMITED WARRANTY. IT IS IMPERATIVE THAT INSTALLATION AND SETUP WORK BE PERFORMED ONLY BY AN AUTHORIZED RUNCO DEALER TO PROTECT YOUR RIGHTS UNDER THIS WARRANTY. THIS WILL ALSO ENSURE THAT YOU ENJOY THE FINE PERFORMANCE OF WHICH YOUR RUNCO PRODUCT IS CAPABLE WHEN INSTALLED AND CALIBRATED BY RUNCO AUTHORIZED PERSONNEL.

RIGHTS, LIMITS AND EXCLUSIONS:

Runco limits its obligations under any implied warranties under state laws to a period not to exceed the warranty period. There are no express warranties. Runco also excludes any obligation on its part for incidental or consequential damages related to the failure of this product to function properly. Some states do not allow limitations on how long an implied warranty lasts, and some states do not allow the exclusion or limitation of incidental or consequential damages. So the above limitations or exclusions may not apply to you. This warranty gives you specific legal rights, and you may also have other rights that vary from state to state.

EFFECTIVE WARRANTY DATE:

This warranty begins on the effective date of delivery to the end user. For your convenience, keep the original bill of sale as evidence of the purchase date.

IMPORTANT – WARRANTY REGISTRATION:

Please fill out and mail your warranty registration card. It is imperative that Runco knows how to reach you promptly if we should discover a safety problem or product update for which you must be notified.

CONTACT A RUNCO AUTHORIZED SERVICE CENTER TO OBTAIN SERVICE:

Repairs made under the terms of this Limited Warranty covering your Runco video product will be performed at the location of the product, during usual working hours, providing location of product is within normal operating distance from a Runco Authorized Service Center. In some instances it may be necessary for the product to be returned to the Runco factory for repairs. If, solely in Runco's judgment, location of product to be repaired is beyond normal operating distance of the closest Runco Authorized Service Center, or the repair requires the unit be returned to the Runco factory, it is the owner's responsibility to arrange for shipment of the product for repair. These arrangements must be made through the selling Runco Dealer. If this is not possible, contact Runco directly for a Return Authorization number and shipping instructions. Runco will return product transportation prepaid in the United States, unless no product defect is discovered. In that instance, shipping costs will be the responsibility of the owner.

COPYRIGHT AND TRADEMARKS:

© Copyright 2006 Runco International. This document contains proprietary information protected by copyright, trademark and other intellectual property laws. All rights are reserved. No part of this manual may be reproduced by any mechanical, electronic or other means, in any form, without prior written permission of the manufacturer.

Reflection, Enhanced GEN3, DHD, Vivix, Virtual Cinema, CineWide, AutoScope, O-Path, CinOptx, LiveLink, CSMS, SuperOnyx and VirtualWide are trademarks of Runco International. All other trademarks and registered trademarks used in this document are the property of their respective owners.

Runco International products are manufactured under one or more of the following patents: US. Patent 6755540 and Other Patents Pending.

ADDITIONAL INFORMATION:

To locate the name and address of the nearest Runco Authorized Service Center, or for additional information about this Limited Warranty, please call or write:

RUNCO INTERNATIONAL, INC.
Attn: Customer Service Department
2900 Faber Street
Union City, CA 94587
Ph: (510) 324-7777
Fax: (510) 324-9300
Toll Free: (800) 23-RUNCO

RUNCO VIDEO-PRODUCT INFORMATION
RETAIN THIS INFORMATION FOR YOUR RECORDS

Model Purchased _____ Date _____

Serial Number _____

Runco Authorized Dealer Name _____

Address _____

City _____ State/Province _____ Postal Code _____

Phone _____ Fax _____

Safety Precautions

Thank you for your purchase of this quality Runco video projector! It has been designed to provide you with the quality of video that is expected in a home theater. For the best performance, please read this manual carefully as it is your guide through the menus and operation.

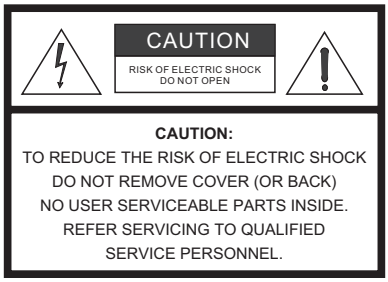

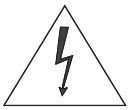

WARNING
This symbol is intended to alert the user to the presence of uninsulated “dangerous voltage” within the product’s enclosure that may be of sufficient magnitude to constitute a risk of electric shock.

This symbol is intended to alert the user to the presence of important operating and maintenance (servicing) instructions in the literature accompanying the appliance.

This equipment has been tested and found to comply with the limits for a Class B digital device, pursuant to Part 15 of the FCC Rules. These limits are designed to provide reasonable protection against harmful interference in a residential installation.

1. Read these instructions.
2. Keep these instructions.
3. Heed all warnings.
4. Do not use this equipment near water, outdoors or otherwise exposed to the elements.
5. Clean only with a dry cloth.
6. Do not block any ventilation openings.
7. Do not install near any heat sources such as radiators, heat registers, stoves, or other apparatus (including amplifiers) that produce heat.
8. Do not defeat the safety feature of the polarized or grounding type plug. A polarized type plug has two blades with one wider than the other. A grounding type plug has two blades and a third grounding prong. The third prong is provided for your safety. If the provided plug does not fit into your outlet, consult an electrician for the replacement of the obsolete outlet.
9. The 12V trigger only outputs DC 12V signal for triggering. Do not connect to any other power input or output. This could cause damage to this unit.
10. Only use accessories specified by Runco International.
11. Keep the packing material in case the equipment should ever need to be shipped.
12. Unplug this projector during lightning storms or when it will not be used for an extended period of time.
13. The lamp becomes extremely hot during operation. Allow the projector to cool down for approximately 45 minutes prior to removing the lamp assembly for replacement. Do not operate lamps beyond the rated lamp life. Excessive operation of lamps beyond rated life could cause them to explode in rare occasions.
14. Refer all servicing to qualified service personnel. Servicing is required when the projector has been damaged in any way, objects have fallen or spilled into the projector, the projector has been exposed to rain or moisture, does not operate normally, or has been dropped.

Table of Contents

TWO YEAR LIMITED WARRANTY ..... **iii**

Safety Precautions ..... **vi**

1. Introduction **1**

About This Manual 1

Target Audience 1

If You Have Comments About This Manual... 1

Textual and Graphic Conventions 1

Using This Manual 2

Description, Features and Benefits 3

Key Features and Benefits 4

Parts List 4

2. Controls and Functions **5**

VX-40d/-50d/-60d/-80d at a Glance 5

VX-40d/-50d/-60d/-80d Input Panel 6

VX-40d/-50d/-60d/-80d Rear-Panel Keypad 8

DHD Controller Front Panel 10

DHD Controller Rear Panel 11

Outputs 11

Inputs 12

DHD Controller Remote Control 13

3. Installation **17**

Remote Control 17

Notes on Batteries 17

Notes on Remote Control Operation 17

Quick Setup 18

Installation Considerations 19

Installation Type 19

Ambient Light 19

Throw Distance 20

Vertical and Horizontal Position 22

Vertical and Horizontal Lens Shift 22

Folded Optics 24

Other Considerations 24

Installing the Projection Lens 25
Installing the Optional CineWide Lens Mount 26
Remove Projector Front Feet (CineWide with AutoScope) 26
Install Anamorphic Lens Motor (CineWide with AutoScope) or Base Plate (fixed CineWide) 26
Install Projector Stand (CineWide with AutoScope, Floor-Mount) 27
Mounting the VX-40d/-50d/-60d/-80d 28
Floor Mounting 28
Ceiling Mounting 28
Adjusting the Projection Angle 28
Connections to the VX-40d/-50d/-60d/-80d and DHD Controller 29
Connector Panel Access 29
Connecting the DHD Controller to the VX-40d/-50d/-60d/-80d 29
Connecting Source Components to the DHD Controller 30
RS-232 Controller Connection 34
Connecting 12-Volt Trigger Outputs to External Theater Components 34
Connecting to AC Power 35
Turning on the Power 36
Selecting the Input Source 36
Adjusting the Picture Orientation 37
Primary Lens Adjustments 37
Focus 37
Zoom 37
Vertical and Horizontal Lens Shift 37
Installing and Adjusting the CineWide Anamorphic Lens 38
Attach Lens Mounting Assembly to Lens Motor Carriage Plate (CineWide with AutoScope) or Base Plate (fixed CineWide) 38
Configure Lens Motor Trigger (CineWide with AutoScope) 39
Adjust the Anamorphic Lens 39
Calibrating Projector Inputs 42
TheaterMaster Remote Control Functions 44
Navigating the Projector Menus 45
Channel Setup 45
Auto Setup 47
Size and Position Menu 48
Image Settings Menu 50
Working With the Lamp 53

4. Operation 57
Using the On-Screen Menus 57
Main Menu 59
Input Source 59
Aspect Ratio 59
Picture 61
Input Position 65
ISF Presets 66
Information 66
Calibration 67
Service 69
5. Maintenance and Troubleshooting 73
Lamp and Filter Replacement 73
Filter Replacement 75
Lens Replacement 76
Troubleshooting Tips 77
Error Codes 79
6. Serial Communications 83
RS-232 Connection and Port Configuration 83
Serial Command Syntax 83
7. Specifications 89
VX-40d/-50d/-60d/-80d Specifications 89
DHD Controller Specifications 92
VX-40d/-50d/-60d/-80d Dimensions 93

Notes:

List of Figures

2-1. VX-40d/-50d/-60d/-80d Top/Rear/Front View 5
2-2. VX-40d/-50d/-60d/-80d Input Panel 6
2-3. VX-40d/-50d/-60d/-80d Rear-Panel Keypad 8
2-4. DHD Controller Front Panel 10
2-5. DHD Controller Rear Panel 11
2-6. DHD Controller Remote Control 13
3-1. Estimating Throw Distance 20
3-2. Projector Placement 22
3-3. Vertical Lens Shift 22
3-4. Horizontal Lens Shift 23
3-5. Folded Optics 24
3-6. Lens Assembly (Front View) 25
3-7. Mounting Angle Ranges (Front-to-Back and Side-to-Side) 28
3-8. Connecting the VX-40d/-50d/-60d/-80d to the DHD Controller 29
3-9. DVI Source Connections 30
3-10. Digital (DTV) RGB or Component Video Connections 31
3-11. Analog RGB Connections 32
3-12. Composite, S-Video and Component Video Connections 33
3-13. RS-232 Control System Connection 34
3-14. Connecting 12-Volt Trigger Outputs 35
3-15. TheaterMaster Remote Control for VX-40d/-50d/-60d/-80d 43
3-16. Channel Setup Menu 45
3-17. Copying a Channel 46
3-18. Resize Presets: No Resizing 48
4-1. DHD Controller OSD Menu Structure for VX-40d/-50d/-60d/-80d 58
4-2. Typical PLUGE Pattern for Adjusting Brightness 62
4-3. Typical Gray Bar Pattern for Adjusting Contrast 63
4-4. Typical Color Bar Pattern for Adjusting Color Saturation and Tint 63
4-5. Typical Test Pattern for Adjusting Sharpness 65
4-6. Keystone Correction 71
5-1. Removing the Lamp Door 73
5-2. Unlocking the Lamp 73

5-3. Removing the Lamp 74
5-4. Installing A New Lamp 74
5-5. Recording the Serial Number of a New Lamp 75
5-6. Removing the Primary Lens 76
7-1. VX-40d/-50d/-60d/-80d Dimensions 93

1. Introduction

1.1 About This Manual

This Owner's Manual describes how to install, set up and operate the Runco Video Extreme™ Series DLP Projector (Models VX-40d, VX-50d, VX-60d and VX-80d) and DHD Controller. It describes the features and functions available with DHD Controller Software version 2.0 and later.

Throughout this manual, the Runco Video Extreme DLP Projector and DHD Controller are referred to as the "VX-40d/-50d/-60d/-80d." The information in this manual applies to all four projectors except where otherwise indicated.

Target Audience

Runco has prepared this manual to help home theater installers and end users get the most out of the VX-40d/-50d/-60d/-80d.

Runco has made every effort to ensure that this manual is accurate as of the date it was printed. However, because of ongoing product improvements and customer feedback, it may require updating from time to time. You can always find the latest version of this and other Runco product manuals on-line, at www.runco.com.

If You Have Comments About This Manual...

Runco welcomes your comments about this manual. Send them to techpub@runco.com.

Textual and Graphic Conventions

Text Conventions: The following conventions are used in this manual, in order to clarify the information and instructions provided:

- Remote and built-in keypad button identifiers are set in upper-case bold type; for example, "Press **EXIT** to return to the previous menu."
- Computer input (commands you type) and output (responses that appear on-screen) is shown in monospace (fixed-width) type; for example: "To change the aspect ratio to Letterbox, type `LETTERBOX` **`<Enter>`**."
- All keys with functional names are initial-capped, set in bold type and enclosed in angle brackets. These keys are the following: **`<Enter>`**, **`<Spacebar>`**, **`<Control>`**, **`<Esc>`** and **`<Tab>`**.
- **`<Enter>`** indicates that you may press either the RETURN or ENTER key on your keyboard if it has both keys.

In addition to these conventions, underlining, boldface and/or italics are occasionally used to highlight important information, as in this example:

Note *A carriage return **must** be used after each command or string.*

Graphic Conventions: These symbols appear in numerous places throughout the manual, to emphasize points that you must keep in mind to avoid problems with your equipment or injury:

Tip — *TIPS highlight time-saving short cuts and helpful guidelines for using certain features.*

Note — *NOTES emphasize text with unusual importance or special significance. They also provide supplemental information.*

Caution — *CAUTIONS alert users that a given action or omitted action can degrade performance or cause a malfunction.*

WARNING — *WARNINGS appear when a given action or omitted action can result in damage to the equipment, or possible non-fatal injury to the user.*

DANGER! — *DANGER appears when a given action can cause severe injury or death.*

1.2 Using This Manual

Use the following table to locate the specific information you need in this manual.

If you need...	... Turn to page:
Information about obtaining service	iv
General information about the Video Extreme™ DLP Projector and DHD Controller	3
Installation instructions	17
First-time configuration instructions	36
Advanced configuration instructions	67
Troubleshooting tips	77
Product specifications	89

1.3 Description, Features and Benefits

The new Video Xtreme™ Portfolio of 3-chip DLP™ projectors represent Runco's ultimate achievement in video projection design and performance. These models have been created for the very finest home theater and home cinema applications and true connoisseurs of big-screen picture perfection.

With Runco's three-chip implementation of DLP, no color wheel is used, reducing mechanical complexity and compromises to color spectrum purity. Four models are offered with configuration options creating sixteen distinct versions, for a lineup so broad and versatile that custom-tailoring for any conceivable installation requirement is now possible.

All models feature newly designed Xenon illumination systems for tremendous light output. The VX-40d and VX-60d are equipped with a 1.0 kW lamp, while the VX-50d and VX-80d boast an impressive 1.2 kW lamp to produce our brightest pictures ever. Runco's Xenon lamp intensity control system can operate at lower output levels as well, for use with smaller screens to preserve maximum black level performance and extend lamp life.

The VX-40d and VX-50d feature a native resolution of 1280 x 720, utilizing advanced 16:9 SuperOnyx™ DMD™ technology. The VX-60d and VX-80d use a new SuperOnyx DMD array calibrated for 788p resolution on 16:9 screens, with an anamorphic lens option bringing resolution all the way up to a native 1400 x 1050 for stunning, high-definition performance.

All models offer world class CinOptx™ Telesto lenses, usually associated with the most expensive professional screening applications. Telesto lenses are available in five different throw distance ranges to accommodate a wide variety of implementations.

The VX-40d/-50d/-60d/-80d is supplied with Runco's next-generation, all-digital DHD Controller, featuring advanced Vivix II™ processing. This controller produces stunning video imagery, elevating even standard NTSC material to near high-definition levels.

Multiple aspect ratio control includes Runco's VirtualWide™ for viewing 4:3 material in widescreen with no loss of picture quality. The DHD provides for a pure digital signal path from input to output, making this system ready for Runco's exclusive LiveLink™ DVI cable solution to preserve HD signal quality over long runs.

Runco has engineered ISF™ calibration standards into every model for the purest video performance and has incorporated AxiShift™ technology with a motorized horizontal and vertical lens shift system to resolve even the most difficult projector placement issues.

For uncompromising widescreen reproduction of movies originally filmed in the "scope" (2.35:1) format, the VX-40d/-50d/-60d/-80d can be equipped with Runco's patent-pending CineWide™ technology, a combination of software, electronics and high-quality anamorphic optics. CineWide maintains constant vertical height on the screen just as in a movie theater. When a viewer transitions from 1.78:1 (16:9) program material to 2.35:1, the image simply gets wider while full height is maintained. Also available with the VX-40d/-50d/-60d/-80d is CineWide with AutoScope™, an enhanced, remote-controlled motorized version of CineWide.

Discrete IR and RS-232 control make custom installation seamless, while discrete source and aspect ratio selection accommodate any automation control system.

Key Features and Benefits ➤ The VX-40d/-50d/-60d/-80d offers these key features and benefits:

- Native Resolution: 1280 x 720 (VX-40d/50d) or 1400 x 1050 (VX-60d/80d)
- Three-chip Digital Light Processing (DLP™) system
- Two DVI Inputs (on DHD Controller) with High-bandwidth Digital Content Protection (HDCP)
- HDTV Compatible
- CinOptx™ *Telesto* lens options for stunning sharpness and throw distance flexibility

Parts List ➤ Your VX-40d/-50d/-60d/-80d is shipped with the following items. If any items are missing or damaged, please contact your Runco dealer or Runco Customer Service at (800) 23-RUNCO.

- Video Extreme™ DLP Projector and DHD Controller
- Remote Control Unit and two (2), AAA-size batteries
- TheaterMaster Remote Control Unit and four (4), AAA-size batteries
- Two (2), 110-VAC power cords (VX-40d/VX-60d)

  – OR –

  One 110-VAC and one 220-VAC power cord (VX-50d/VX-80d)
- RJ-11 Telephone Cable, 50 feet (15.24 meters)
- Serial Port Adapter, RJ-11 Female to DB-9 Male
- Rack-mounting brackets and hardware for the DHD Controller
- Warranty information and registration card
- Runco VX-40d/-50d/-60d/-80d Owner's Operating Manual (this document)

Optional Accessories:

- CineWide™ technology (fixed, secondary anamorphic lens)
- CineWide™ with AutoScope™ system (secondary anamorphic lens and motorized mount)
- Ceiling mount kit
- LiveLink™ DVI Cabling System

2. Controls and Functions

2.1 VX-40d/-50d/-60d/-80d at a Glance

Figure 2-1 shows the key VX-40d/-50d/-60d/-80d components.

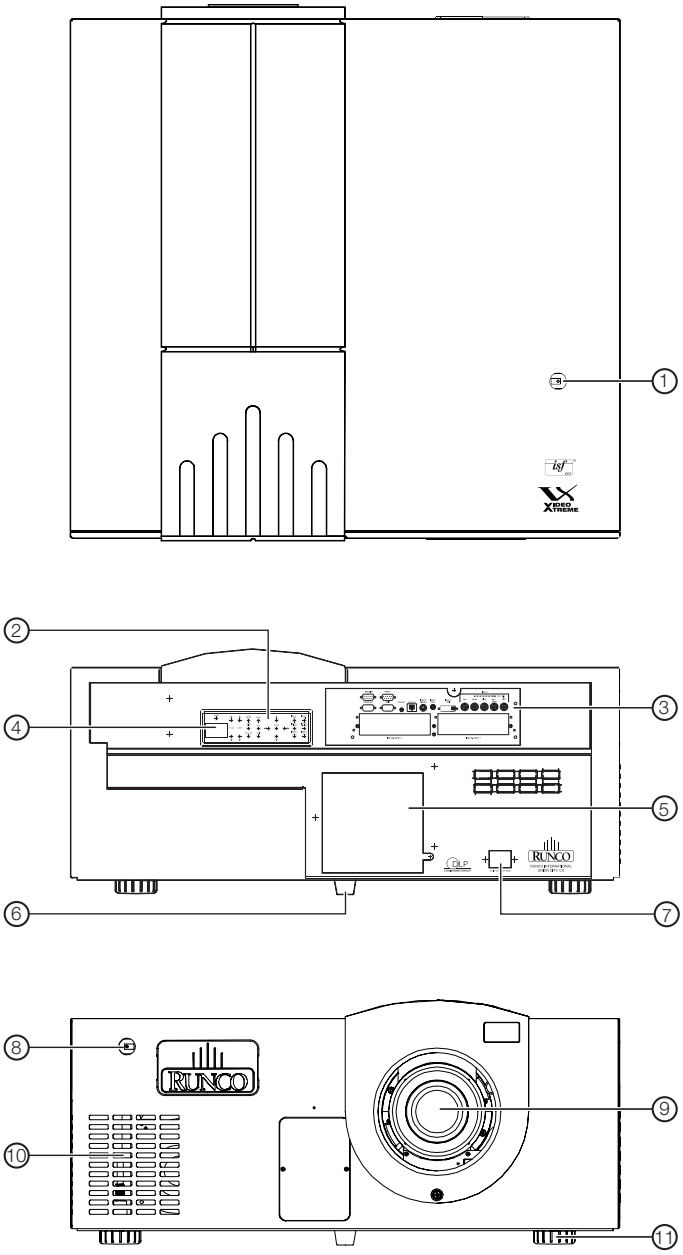

Figure 2-1. VX-40d/-50d/-60d/-80d Top/Rear/Front View

1. **TOP IR SENSOR**
2. **BUILT-IN KEYPAD**
   The built-in keypad is located at the back of the projector, beside the input panel. Use it similarly to the TheaterMaster Remote Control to perform service-related tasks on the projector.
3. **INPUT PANEL**
   Connect the DHD Controller outputs here.
4. **LED STATUS DISPLAY**
   Indicates current operating status of the projector.
5. **LAMP COVER**
   Remove this cover to access the lamp compartment.
6. **REAR FOOT (Stationary)**
7. **POWER INPUT (100 to 240 VAC)**
   Connect the VX-40d/-50d/-60d/-80d to power here. (The VX-40 and VX-60 require 100 to 240 VAC; the VX-50 and VX-80 require 200 to 240 VAC.)
8. **FRONT IR SENSOR**
9. **PROJECTION LENS**
10. **INTAKE VENT**
    Allows cool air to enter the projector, to help maintain proper operating temperature.
11. **ADJUSTABLE FEET (2)**
    Located on the underside of the projector are two adjustable feet. Raise or lower these feet when positioning the projector to ensure it is level on all sides so the displayed image will appear rectangular without any keystone.

2.2 VX-40d/-50d/-60d/-80d Input Panel

Figure 2-2 shows the VX-40d/-50d/-60d/-80d rear input panel.

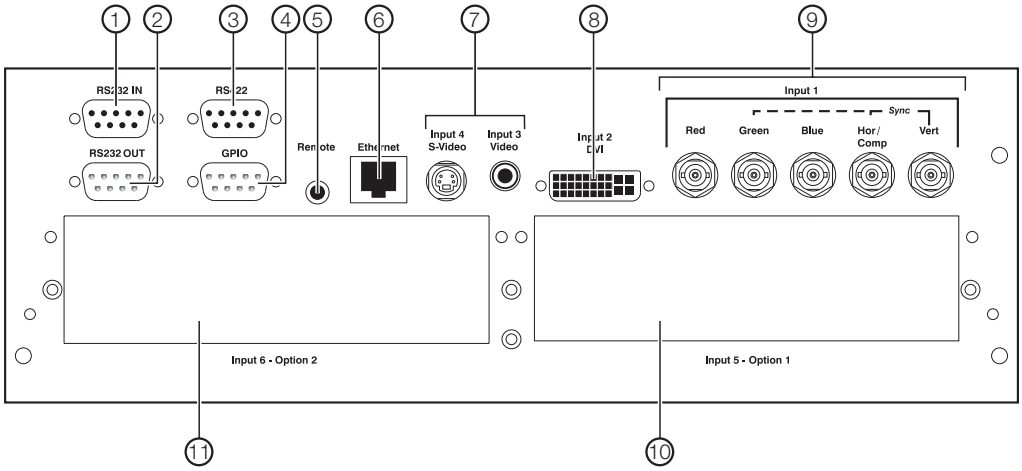

Figure 2-2. VX-40d/-50d/-60d/-80d Input Panel

1. **RS232 IN**
   Connect the RS-232 output from the DHD Controller here, using the provided RJ11-to-DB9 adapter and communication cable.
2. **RS232 OUT**
   Not used.
3. **RS422**
   Not used.
4. **GPIO**
   Not used.
5. **REMOTE**
   Wired input from an external remote control or infrared receiver.
6. **ETHERNET**
   Reserved for future use.
7. **INPUT 3 (Video) / INPUT 4 (S-Video)**
   Not used. Connect all video sources to the DHD Controller.
8. **INPUT 2 (DVI)**
   HDCP-compliant digital video input. Connect the DVI output from the DHD Controller to this input.
9. **INPUT 1 (RGBHV)**
   Five, BNC connectors for connecting the RGBHV output from the DHD Controller.
10. **INPUT 5 (Option 1)**
    Reserved for future use.
11. **INPUT 6 (Option 2)**
    Reserved for future use.

2.3 VX-40d/-50d/-60d/-80d Rear-Panel Keypad

Figure 2-3 shows the VX-40d/-50d/-60d/-80d rear-panel keypad.

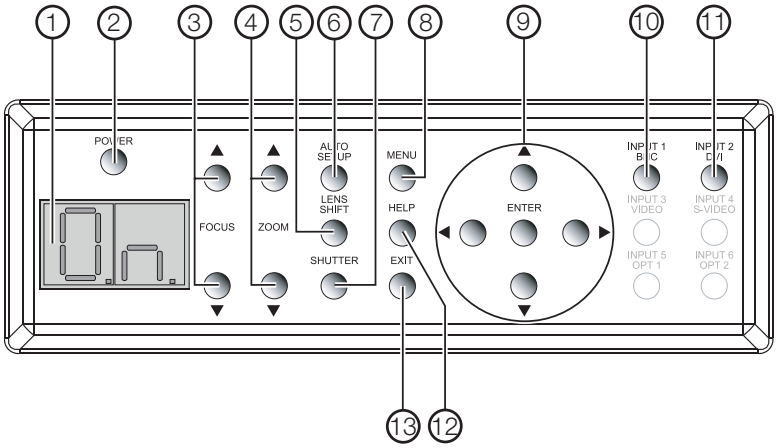

Figure 2-3. VX-40d/-50d/-60d/-80d Rear-Panel Keypad

1. **LED STATUS DISPLAY**
   The LED status window displays an active pattern of segments to indicate the projector is changing its state from powered down to powered up. The message “On” appears in the display when the projector has completed its initialization and is ready for use.
2. **POWER BUTTON**
   Not used. Use the DHD Controller to turn the projector on or off.
3. **FOCUS (▲ / ▼)**
   Use these buttons to focus the projected image.
4. **ZOOM (▲ / ▼)**
   Use these buttons to increase or decrease the projected image size.
5. **LENS SHIFT**
   Press this button to access the motorized lens shift controls.
6. **AUTO SETUP**
   Press this button to initiate an automated process in which the projector optimizes critical display parameters for the current source.
7. **SHUTTER**
   Press and hold this button for two seconds to toggle the internal mechanical shutter blade closed or open. A closed shutter blanks the display (turns it to black). Close the shutter to mute all display while maintaining access to projector functions. Opening the shutter restores the image.
8. **MENU**
   Press this button to show or hide the projector menus.

Note *The VX-40d/-50d/-60d/-80d has its own internal menu system, separate from that of the DHD Controller. However, it is intended for use by trained service personnel only.*

9. **Menu Navigation Buttons:**

   UP BUTTON (▲)
   Used to move the menu cursor up in the VX-40d/-50d/-60d/-80d menu system.

   LEFT BUTTON (◀)
   Used to move the menu cursor left in the VX-40d/-50d/-60d/-80d menu system.

   DOWN BUTTON (▼)
   Used to move the menu cursor down in the VX-40d/-50d/-60d/-80d menu system.

   RIGHT BUTTON (▶)
   Used to move the menu cursor right in the VX-40d/-50d/-60d/-80d menu system.

   ENTER BUTTON
   When an item is highlighted on the On-Screen Display, the **ENTER** button selects the item.

10. **INPUT 1 (BNC)**
    Press this button to select projector Input 1 (RGBHV output from the DHD Controller).

11. **INPUT 2 (DVI)**
    Press this button to select projector Input 2 (DVI output from the DHD Controller).

12. **HELP**
    Press **HELP** to display on-screen help text. Press **HELP** again (or **EXIT**) to hide it.

13. **EXIT**
    When in the menu structure, the **EXIT** button brings the menu back one page or cancels the current function.

2.4 DHD Controller Front Panel

Figure 2-4 shows the controls and indicators on the DHD Controller front panel; the paragraphs that follow describe them.

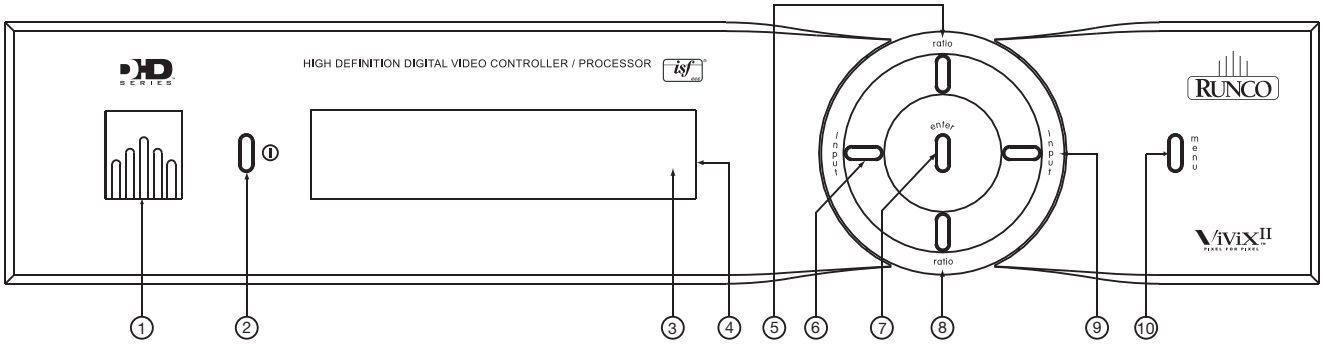

Figure 2-4. DHD Controller Front Panel

1. **RUNCO ICON**
   Lights red to indicate that the DHD Controller is in standby mode; lights blue to indicate that the unit is on.
2. **POWER BUTTON**
   Press once to toggle from standby mode to on mode. Press it again to return to standby mode. For a discrete on or off command, you can use the direct access buttons on the remote control.
3. **IR SENSOR**
   Receives IR commands from the remote.
4. **VACUUM FLUORESCENT DISPLAY**
   Can be used instead of the On-Screen Display (OSD). Displays currently-selected menu or – if no menu is selected – the current source, signal format (NTSC or PAL), input resolution and aspect ratio.
5. **UP BUTTON**
   Use to direct select aspect ratios or move the menu cursor up in the On-Screen Display. When no menus are present on-screen, the **UP** button toggles you through aspect ratios in the following order:
   Anamorphic - Standard (4:3) - Letterbox - VirtualWide - Cinema - Virtualwide 2.35

   (Virtualwide 2.35 is available only on CineWide-equipped projectors. For more information about aspect ratios, refer to Table 4-1.)
6. **LEFT BUTTON**
   Used to direct select inputs or move the menu cursor left in the On Screen Display. When no menu is present on-screen, the **LEFT** button toggles you through the different sources, in this order:
   HD Pass Thru 2 - HD Pass Thru 1 - DVI 2 - DVI 1 - HD/RGB2 - HD/RGB1 - Component SD - S-Video 2 - S-Video 1 - Composite

7. **ENTER BUTTON**
   When an item is highlighted on the On-Screen Display, the **ENTER** button selects the item.
8. **DOWN BUTTON**
   Use to direct select aspect ratios or move the menu cursor down in the On-Screen Display. When no menu is present on-screen, this button toggles you through the different aspect ratios, in this order:
   Virtualwide 2.35 - Cinema - VirtualWide - Letterbox - Standard (4:3) - Anamorphic
9. **RIGHT BUTTON**
   Used to direct select inputs or move the menu cursor right in the On Screen Display. When no menus are present on-screen, the **RIGHT** button toggles you through the different sources, in this order:
   Composite - S-Video 1 - S-Video 2 - Component SD - HD/RGB 1 - HD/RGB 2 - DVI 1 - DVI 2 - HD Pass Thru 1 - HD Pass Thru 2
10. **MENU BUTTON**
    Pressing the **MENU** button brings up the main menu. Also, if you are in an adjustment mode or function, pressing **MENU** brings the menu back one level.

2.5 DHD Controller Rear Panel

Figure 2-5 shows the rear connector panel on the DHD Controller.

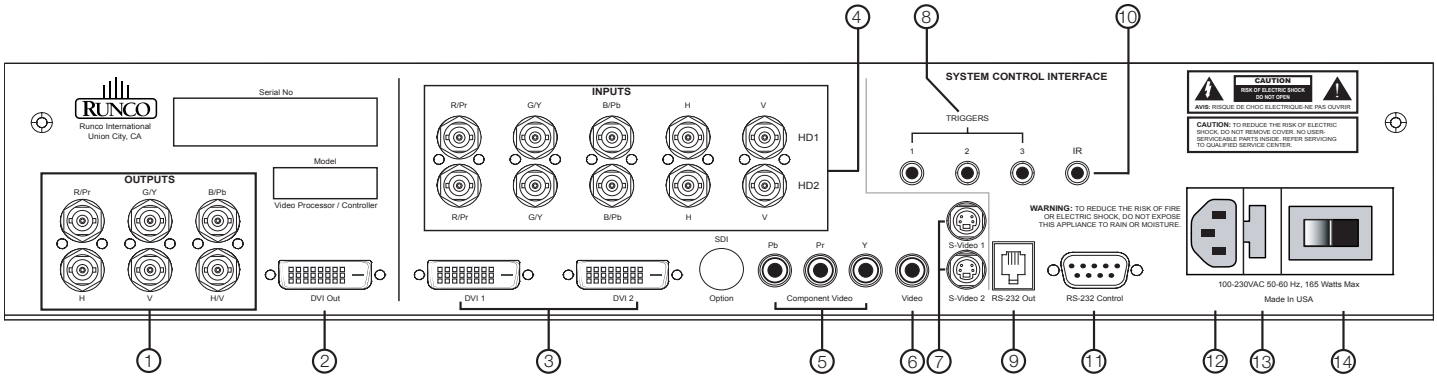

Figure 2-5. DHD Controller Rear Panel

1. **ANALOG OUTPUTS (RGBHV)**
   Connect these to the RGBHV inputs (**Input 1**) on the VX-40d/-50d/-60d/-80d.

   Note *If the DVI 1 or DVI 2 input is active and the input signal is HDCP-encrypted, the RGBHV output of the DHD Controller is disabled.*

2. **DVI OUT**
   Connect this to **Input 2** (DVI) on the VX-40d/-50d/-60d/-80d.

◄ ***Outputs***

Inputs ➤

3. **DVI 1 / DVI 2 (Digital)**
   Two, HDCP-compliant digital video inputs for connecting a DVD player or HD tuner with a DVI or HDMI output.
4. **HD1 / HD2 (Analog BNC connectors)**
   Five, BNC connectors for connecting either RGB or component high-definition television signals. The VX-40d/-50d/-60d/-80d automatically detects the signal format: RGB(HV) or YPrPb, 480p, 720p, 480i, 576i or 1080i.
5. **COMPONENT VIDEO (RCA connectors)**
   Standard Definition (480i/576i) Component (YPrPb) input. This is the input for component video from sources such as DVD players.

Tip *For best results, do not run your DVD player in progressive mode.*

6. **COMPOSITE VIDEO INPUT**
   Standard composite video input for connecting a VCR, laser disc player or other composite video source.
7. **S-VIDEO 1 / S-VIDEO 2**
   Two, standard S-Video inputs for connecting a DVD player, satellite receiver or Super VHS (S-VHS) VCR.
8. **12-VOLT (750 mA) TRIGGER OUTPUTS**
   Connection for up to three (3), 12-volt trigger-controlled devices. These can be retractable screens, screen masks or the Runco CineWide with AutoScope system.
9. **RS-232 OUTPUT**
   Connect this to the **RS232** input on the projector, using the provided RJ11-to-DB9 adapter and communication cable.
10. **IR**
    Wired input from an external remote control or infrared receiver. It is a 3.5-mm, mini phono jack, wired as follows:
    Ring = +5V
    Tip = IR Input
    Sleeve = Ground

Note *When an external remote control or infrared receiver is connected to the wired IR input, the IR sensor on the front of the DHD is disabled.*

11. **RS-232 CONTROL PORT**
    A female, 9-pin D-sub connector for interfacing with a PC or home theater automation/control system.
12. **POWER INPUT (100 to 240 VAC)**
    Connect the DHD Controller to power here.
13. **MAIN AC FUSE**
    This is the main AC input fuse (5mm x 20mm, 500 mA, 250V slow-blow).
14. **MAIN POWER SWITCH**
    Disconnects or applies power to the DHD Controller.

2.6 DHD Controller Remote Control

Figure 2-6 shows the DHD Controller remote control, and the paragraphs that follow describe its functionality.

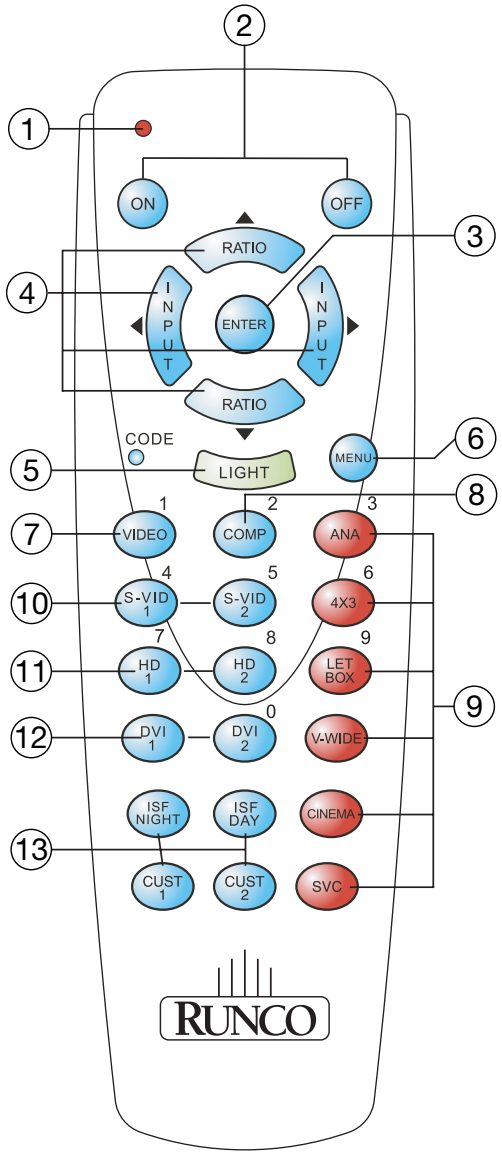

Figure 2-6. DHD Controller Remote Control

1. **IR OUTPUT INDICATOR**
   Lights when a button is pressed to indicate that an IR signal is being transmitted.
2. **ON / OFF**
   Press to turn the projector on or off.
3. **ENTER**
   Press to select a highlighted menu item or confirm a changed setting.
4. **Cursor Buttons (▲, ◀, ▼, ▶)**
   Use these buttons to select items or settings, adjust settings or switch display patterns.

   When no menus are present on-screen, the **UP** and **DOWN** buttons toggle through the available aspect ratios, in this order:
   UP Button = Anamorphic - Standard (4:3) - Letterbox - VirtualWide - Cinema - Virtualwide 2.35
   DOWN Button = Virtualwide 2.35 - Cinema - VirtualWide - Letterbox - Standard (4:3) - Anamorphic

   Note *Virtualwide 2.35 is available only on CineWide-equipped projectors. For more information about aspect ratios, refer to Table 4-1.*

   Likewise, the **LEFT** and **RIGHT** buttons toggle through the different source inputs, in this order:
   LEFT Button = HD Pass Thru 2 - HD Pass Thru 1 - DVI 2 - DVI 1 - HD/RGB2 - HD/RGB 1 - Component SD - S-Video 2 - S-Video 1 - Composite
   RIGHT Button = Composite - S-Video 1 - S-Video 2 - Component SD - HD/RGB 1 - HD/RGB 2 - DVI 1 - DVI 2 - HD Pass Thru 1 - HD Pass Thru 2
5. **LIGHT**
   Press to illuminate the buttons.
6. **MENU**
   Press this button to access the OSD controls, or to exit the current menu and return to the previous one.
7. **VIDEO (1)**
   Press to select Composite video input as the source or to enter the numeric character “1.”
8. **COMP (Component) (2)**
   Press to select Component SD (480i/576i) video input as the source or to enter the numeric character “2.”

9. **Aspect Ratio Selection Buttons**
   Use the red buttons to select an aspect ratio directly or to enter numeric characters, as follows:

   ANA (Anamorphic) (3)
   For viewing 16:9 DVDs or HDTV programs in their native aspect ratio.

   4X3 (Standard 4:3) (6)
   Scales the input signal to fit 4:3 display mode in the center of the screen.

   LETBOX (Letterbox) (9)
   For viewing LaserDisc movies or non-anamorphic DVDs on a 4:3 screen.

   V-WIDE (VirtualWide)
   Enlarges a 4:3 image horizontally in a NON-linear fashion to fit 16:9 full screen display.

   CINEMA
   For viewing 2.35:1 source material on a 1.78:1 (16:9) screen. The upper and lower portions are masked.

   SVC (CineWide-equipped projectors only)
   Selects the VirtualWide 2.35 aspect ratio, which anamorphically compresses a 2.35:1 image to fill a 16:9 image area. The anamorphic lens then “stretches” the image back to 2.35:1.

10. **S-VID 1 (4) / S-VID 2 (5) (S-Video)**
    Press to select an S-Video input or to enter the numeric character “4” or “5.”

11. **HD 1 (7) / HD 2 (8)**
    Press to select a HD (RGBHV or YPbPr component) input or to enter the numeric character “7” or “8.”

12. **DVI 1 / DVI 2 (0)**
    Press to select a Digital Video input. Press **DVI2** to enter the numeric character “0.”

13. **Memory Preset Buttons:**

    ISF NT (Night)
    Press to recall settings for the current input from the “ISF Night” memory preset.

    ISF DAY
    Press to recall settings for the current input from the “ISF Day” memory preset.

    CUST 1
    Press to recall settings for the current input from the “Custom 1” memory preset.

    CUST 2
    Press to recall settings for the current input from the “Custom 2” memory preset.

Notes:

3. Installation

3.1 Remote Control

To install batteries in the remote control, press up on the battery cover retainer clip and lift off the cover. Install the two AAA batteries with the correct polarity and then replace the cover.

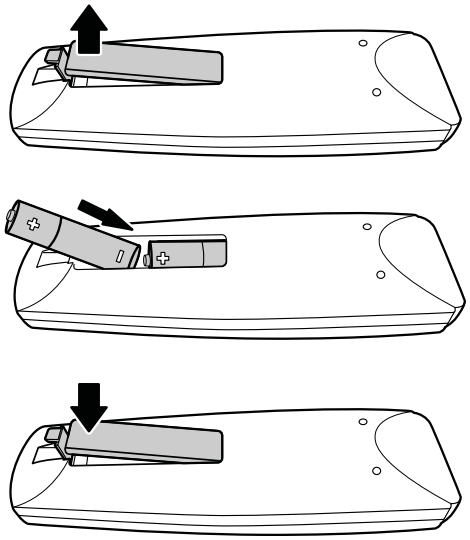

Notes on Batteries

- Make sure that the battery polarities are correct when installing the batteries.
- Do not mix an old battery with a new one or different types of batteries.
- If you will not use the remote control for a long time, remove the batteries to avoid damage from battery leakage.

Notes on Remote Control Operation

- Make sure that there is nothing obstructing the infrared beam between the remote control and the IR receiver on the DHD Controller.
- If the effective range of the remote control decreases, or it stops working, replace the batteries with new ones.
- The remote control may fail to operate if the infrared remote sensor is exposed to bright sunlight or fluorescent lighting.
- Ambient conditions may possibly impede the operation of the remote control. If this happens, point the remote control at the DHD Controller, and repeat the operation.

3.2 Quick Setup

Table 3-1 gives a quick overview of the VX-40d/-50d/-60d/-80d installation process. The sections following this one provide detailed instructions.

Note *Installation should be performed by a qualified custom video installation specialist.*

Table 3-1. Installation Overview

Step	Procedure	For Details, Refer to page...
1	Choose a location for the projector	19
2	Install primary projection lens	25
3	Install CineWide lens mounting assembly (stationary base plate or AutoScope lens motor – optional)	26
4	Mount the projector	28
5	Connect the DHD Controller to the projector	29
6	Connect signal sources to the DHD Controller	30
7	Connect external controller to RS-232 port (optional)	34
8	Connect other home theater components to 12-volt trigger outputs (optional)	34
9	Apply power to the projector	35, 36
10	For rear-screen and/or ceiling-mount installations, select the proper picture orientation	37
11	Primary lens adjustments: projected image size (zoom), position (shift) and focus	22, 37
12	Install CineWide anamorphic lens (optional)	38
13	CineWide lens adjustments: projected image size (zoom), position (shift) and focus	39
14	Calibrate projector input 1 (RGBHV): perform Auto Setup, then adjust size/position, input levels, brightness/contrast etc., as needed	42
15	Repeat Step 14 for projector Input 2 (DVI), if used	42
16	Adjust lamp output and optical aperture, as needed	53
17	DHD Controller input calibration: adjust the following ***for each DHD Controller input***, starting with Component SD; save settings when finished: • Aspect ratio • Brightness • Contrast • Color level • Tint • Input position	59 through 66

3.3 Installation Considerations

Proper installation of your projector will ensure the quality of your display. Whether you are installing a projector temporarily or permanently, you should take the following into account to ensure your projector performs optimally.

Installation Type

Choose the installation type that best suits your needs: front or rear screen, floor mount or inverted mount. Table 3-2 compares these various installation methods.

Table 3-2. Projector Installation Options

Advantages	Considerations
Front Screen, Floor Mount Installation	
• Easy to set up • Can be moved or changed quickly • Easy to access	• Shares floor space with audience
Front Screen, Inverted Mount (ceiling) Installation	
• Does not take up audience space • Projector is unobtrusive • Projector cannot be accidentally moved	• Installation is more permanent • Projector access is more difficult
Rear Screen, Floor Mount Installation	
• Projector is completely hidden • Projector is easily accessed • Usually good ambient light rejection	• Requires separate room • Installation cost is usually higher
Rear Screen, Inverted Mount (ceiling) Installation	
• Projector is completely hidden • Usually good ambient light rejection	• Requires separate room • Installation cost is usually higher
Rear Screen, Floor Mount with Mirror	
• Projector is completely hidden • Usually good ambient light rejection • Requires less space behind screen than other rear screen installations	• Requires separate room • Installation cost is usually higher

Ambient Light

In general, minimize or eliminate light sources directed at the screen. Contrast ratio in your images will be noticeably reduced if light directly strikes the screen, such as when a shaft of light from a window or floodlight falls on the image. Images may then appear washed out and less vibrant.

Throw Distance ➤ Throw distance is the distance measured from the front of the projector to the screen. This is an important calculation in any projector installation as it determines whether or not you have enough room to install your projector with a desired screen size and if your image will be the right size for your screen.

You can quickly estimate the throw distance by taking the width of the screen and multiplying it by the lens throw ratio; see Figure 3-1. The result of this calculation tells you roughly how far back the projector should be positioned from the screen in order to project a focused image large enough to fill the screen.

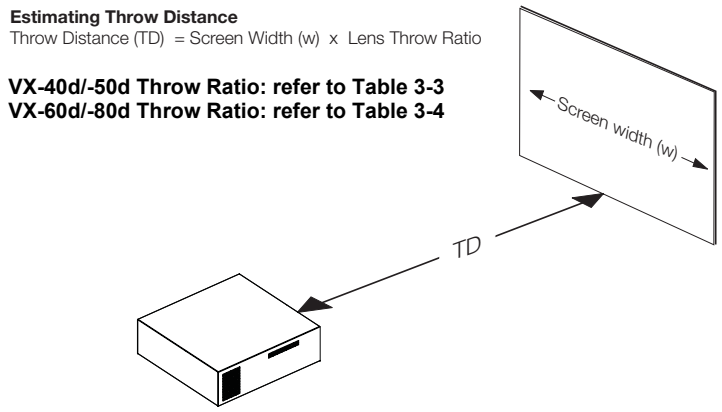

Figure 3-1. Estimating Throw Distance

Throw Distance Ranges - VX-40d/-50d: Table 3-3 lists the available lens options for the VX-40d/-50d and their associated throw ratios.

Table 3-3. VX-40d/-50d Lens Options and Throw Ratios

Lens Option (Note 2)	Throw Ratio (Throw Dist. ÷ Screen Width)	Throw Distance Range (in inches, with 100-inch Wide Screen)	
		Minimum	Maximum
Telesto A	0.8 (Fixed)	For rear-screen installations only. Contact Runco Technical Support for more information.	
Telesto B	1.65 - 1.95	165	195
Telesto C	2.04 - 2.73	204	273
Telesto C with CineWide	1.55 - 2.01	155	201
Telesto D	2.86 - 4.83	286	483
Telesto D with CineWide	2.17 - 3.60	217	360
Telesto E	4.96 - 7.90	496	790
Telesto E with CineWide	3.76 - 5.90	376	590

Notes:

1. Throw distance does not affect image quality, provided these ranges are taken into account.

2. Only the Telesto C, D and E lenses can be used with the optional CineWide (secondary anamorphic) lens. Doing so affects the throw distances as shown here.

Throw Distance Ranges - VX-60d/-80d: Table 3-4 lists the available lens options for the VX-60d/-80d and their associated throw ratios.

Table 3-4. VX-60d/-80d Lens Options and Throw Ratios

Lens Option (Note 2)	Throw Ratio (Throw Dist. ÷ Screen Width)	Throw Distance Range (in inches, with 100-inch Wide Screen)	
		Minimum	Maximum
Telesto A	0.75 (Fixed)	For rear-screen installations only. Contact Runco Technical Support for more information.	
Telesto B	1.48 - 1.75	148	175
Telesto C	1.81 - 2.40	181	240
Telesto C with CineWide (16:9 screen)	1.79 - 1.86	179	186
Telesto D	2.56 - 4.35	256	435
Telesto D with CineWide (16:9 screen)	1.95 - 3.23	195	323
Telesto E	4.48 - 7.11	448	711
Telesto E with CineWide (16:9 screen)	3.40 - 5.31	340	531
Telesto E with CineWide (2.35:1 screen) (Note 3)	2.55 - 4.00	255	400

Notes:

1. *Throw distance does not affect image quality, provided these ranges are taken into account.*
2. *Only the Telesto C, D and E lenses can be used with the optional CineWide (secondary anamorphic) lens. Doing so affects the throw distances as shown here.*
3. *Due to optical and mechanical limitations, this lens combination is available only as a fixed CineWide configuration. CineWide with AutoScope is not supported.*

Vertical and Horizontal Position ➤ Proper placement of the projector relative to the screen will yield a rectangular, perfectly-centered image that completely fills the screen.

Ideally, the projector should be positioned perpendicular to the screen and in such a way that the lens center and screen center are aligned with each other, as shown in Figure 3-2.

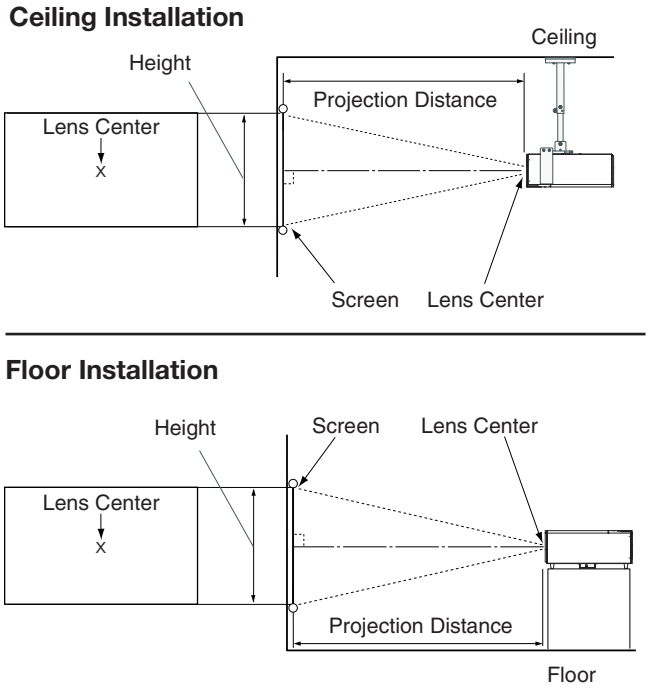

Figure 3-2. Projector Placement

Vertical and Horizontal Lens Shift ➤ If it is not possible to align the projector and screen as shown in Figure 3-2, you can use the lens shift controls to center the image on the screen. Lens shift is generally expressed as a percentage of the screen height or width, as shown in Figure 3-3 and Figure 3-4.

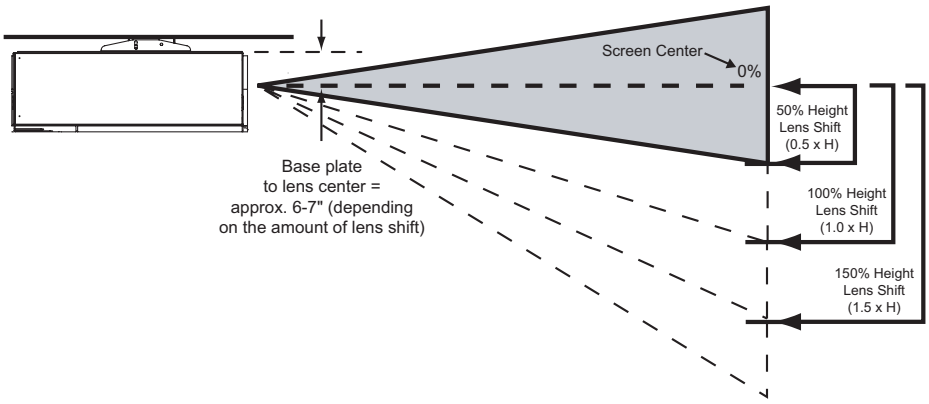

Note: *This is a general example of lens shift. Lenses vary in their shift capabilities.* ***No particular lens or projector is used in this example.***

Figure 3-3. Vertical Lens Shift

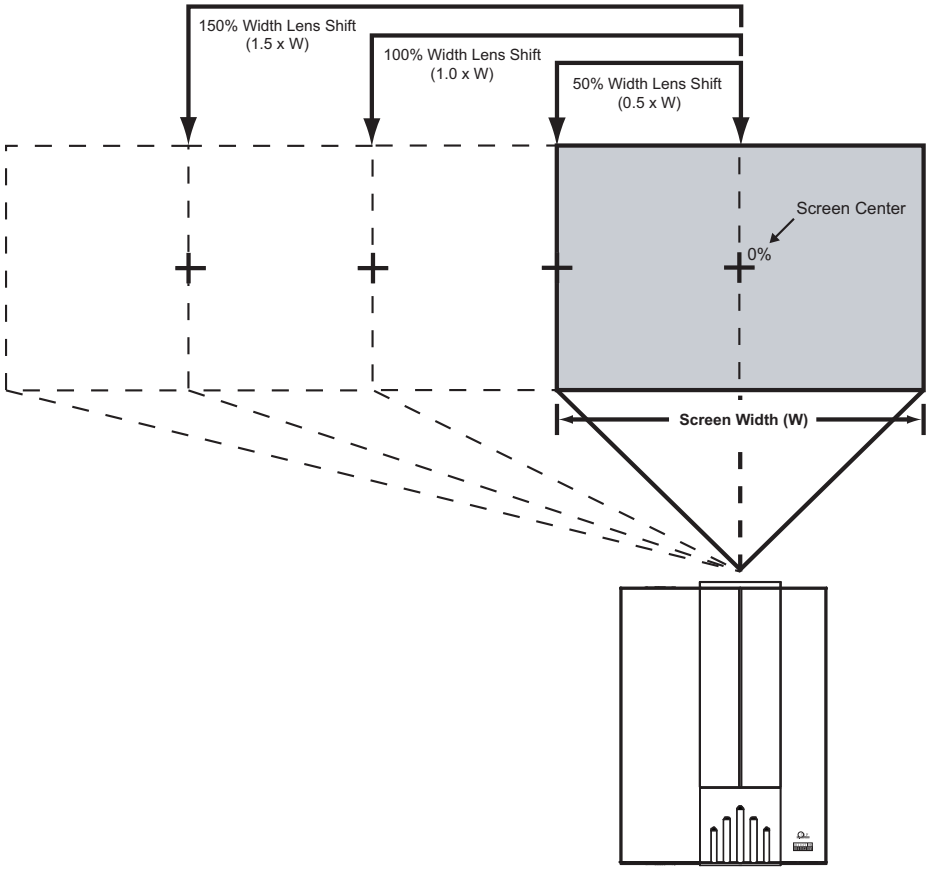

Note: *This is a general example of lens shift. Lenses vary in their shift capabilities.* ***No particular lens or projector is used in this example.***

Figure 3-4. Horizontal Lens Shift

Vertical Lens Shift – VX-40d/VX-50d: The VX-40d/-50d zoom lenses (Telesto B, C, D and E) provide up to 65% of vertical lens shift up or down. For example, with a 96 x 54-inch (16:9) screen, you can shift the image up to 35.10 inches (89.15 cm) above or below the screen center. (Vertical lens shift is not possible with the Telesto A lens.)

Vertical Lens Shift – VX-60d/VX-80d: The VX-60d/-80d zoom lenses (Telesto B, C, D and E) provide up to 50% of vertical lens shift up or down. For example, with a 96 x 54-inch (16:9) screen, you can shift the image up to 27.00 inches (68.58 cm) above or below the screen center. (Vertical lens shift is not possible with the Telesto A lens.)

Horizontal Lens Shift: The VX-40d/-50d/-60d/-80d zoom lenses (Telesto B, C, D and E) allow up to 25% of horizontal lens shift in either direction (left or right). For example, with a 96 x 54-inch (16:9) screen, you can shift the image up to 24.00 inches (60.96 cm) left or right of the screen center. (Horizontal lens shift is not possible with the Telesto A lens.)

Note

1. *With no vertical or horizontal lens shift, the lens center and screen center are aligned with each other.*
2. *Vertical shift limits are percentages of the screen height. Horizontal shift limits are percentages of the screen width.*

Folded Optics ➤ In rear screen applications where space behind the projector is limited, a mirror may be used to fold the optical path, as shown in Figure 3-5. The position of the projector and mirror must be accurately set. If you are considering this type of installation, contact your dealer for assistance.

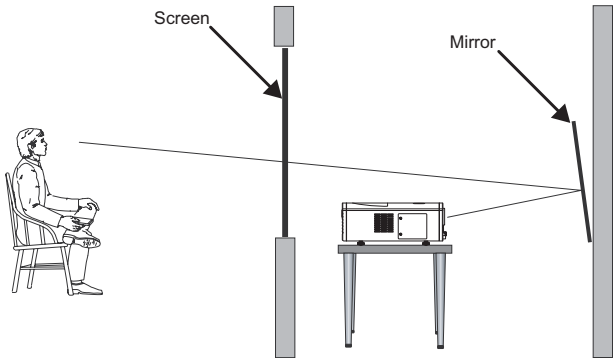

Figure 3-5. Folded Optics

Other Considerations ➤ Other considerations and tips that can help improve your installation:

- Keep the ambient temperature constant and below 35°C (95°F). Keep the projector away from heating and/or air conditioning vents. Changes in temperature may cause drifts in the projector circuitry, which may affect performance.
- Keep the projector away from devices that radiate electromagnetic energy such as motors and transformers. Common sources of these include slide projectors, speakers, power amplifiers and elevators.

3.4 Installing the Projection Lens

The projection lens is shipped separately from the projector. Proceed as follows to install the projection lens:

1. Remove the lens plug from the lens opening in the projector.
2. Place the lens cap on the projection lens to protect it from being damaged during the installation process.
3. Remove the rear cap from the lens. This protective cap is only used during shipping to protect the lens from damage.
4. Slide the new lens into the lens opening of the projector. Make sure to align the connector on the side of the lens with the connector assembly on the lens retaining ring; see Figure 3-6.

   As you connect the lens, you may have to re-align it slightly until the tabs on the lens fit into the slots in the lens retaining ring.

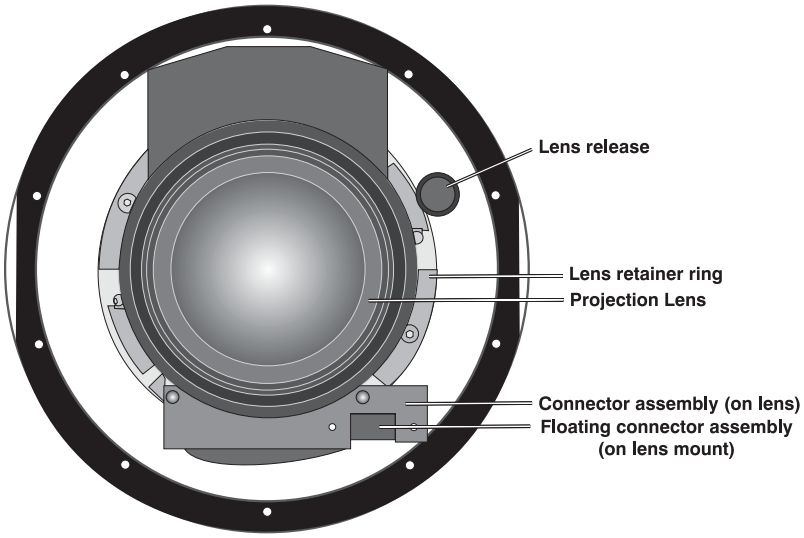

Figure 3-6. Lens Assembly (Front View)

5. With the lens fully inserted (and connected), turn it clockwise until the lens release button “pops” indicating the lens is fully inserted.

3.5 Installing the Optional CineWide Lens Mount

If you are installing a VX-40d/-50d/-60d/-80d with the optional CineWide or CineWide with AutoScope system, proceed as follows to install the anamorphic lens mounting assembly (stationary base plate or AutoScope lens motor).

Note

1. *Do not install the CineWide lens yet, only the mounting plate or lens motor. You will install the CineWide lens after you install the projector and adjust the primary lens.*
2. *Some of the following steps are necessary only for CineWide with AutoScope installations.*

Remove Projector Front Feet (CineWide with AutoScope)

(Skip this step if you are installing a fixed CineWide anamorphic lens.)

Place the projector upside down on a blanket or other soft surface. Loosen and remove the two front feet on the projector.

Install Anamorphic Lens Motor (CineWide with AutoScope) or Base Plate (fixed CineWide)

Note

The anamorphic lens mounting kit is partially pre-assembled at the factory – the AutoScope lens motor and lens mounting assemblies are both fully assembled.

CineWide with AutoScope: Line up the eight mounting holes on the lens motor housing with those on the bottom of the projector.

Secure the motor to the projector with the eight screws provided for this purpose.

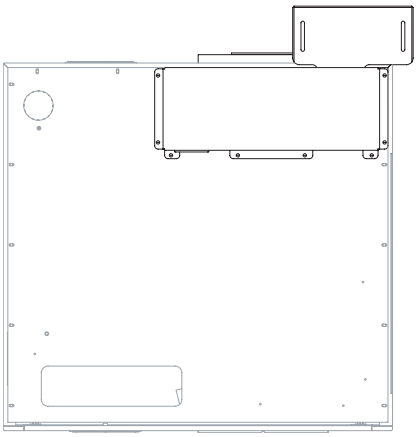

Fixed CineWide: Line up the seven mounting holes on the lens mount base plate with those on the bottom of the projector, directly below the primary lens. Secure the base plate to the projector with the screws provided for this purpose.

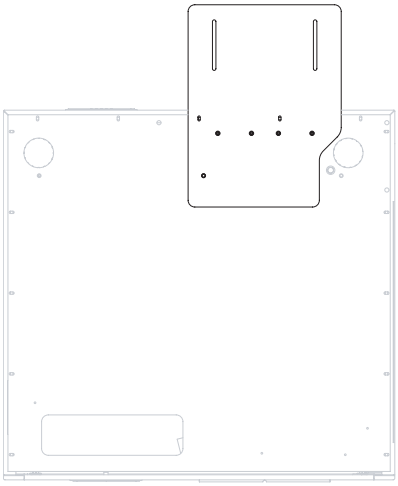

Caution *DO NOT OVER-TIGHTEN THE SCREWS.*

(Skip this step if you are installing a fixed CineWide anamorphic lens, or ceiling-mounting an AutoScope-equipped projector.)

Install Projector Stand (CineWide with AutoScope, Floor-Mount)

If you are installing the VX-40d/-50d/-60d/-80d in an upright position (not ceiling-mounted), use the supplied hardware to attach the projector stand to the bottom of the projector as shown below. This stand allows the projector to lie flat on the mounting surface with the AutoScope lens motor installed.

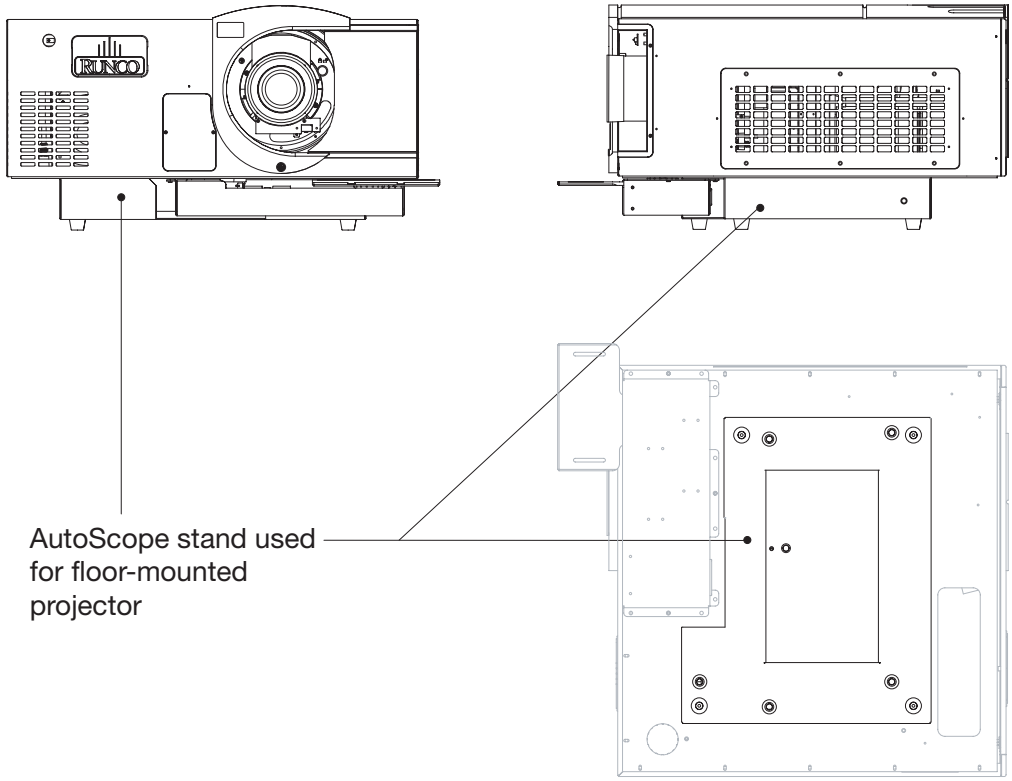

3.6 Mounting the VX-40d/-50d/-60d/-80d

There are several methods for mounting the projector. Depending on your chosen installation, one method may be more suitable than another.

Floor Mounting ➤ In typical front and rear screen installations, the projector can be placed on a secure and level surface such as a table or cart. Carts are useful when moving a projector during a presentation or from site to site. If possible, lock the wheels when it's in position to prevent it from being moved during a presentation.

Ceiling Mounting ➤ The projector can also be inverted and suspended from the ceiling using a specially designed ceiling mount fixture. This type of mounting is recommended for fixed installations and for those that want the projector out of sight or have a limited space for projector and audience.

WARNING *Use only the Runco-approved ceiling mount kit designed for your projector. Carefully read and follow the installation instructions provided with the ceiling mount kit. Failure to do so could cause serious personal injury.*

Adjusting the Projection Angle ➤ If the VX-40d/-50d/-60d/-80d is ceiling-mounted and the screen is significantly lower than the projector, you can tilt the projector at an angle by adjusting the ceiling mount.

The projector can be rotated (front-to-back) up to 360 degrees and mounted without it affecting performance. However, to ensure optimal performance of the lamp, limit the side-to-side tilt of the projector to ±15 degrees; see Figure 3-7.

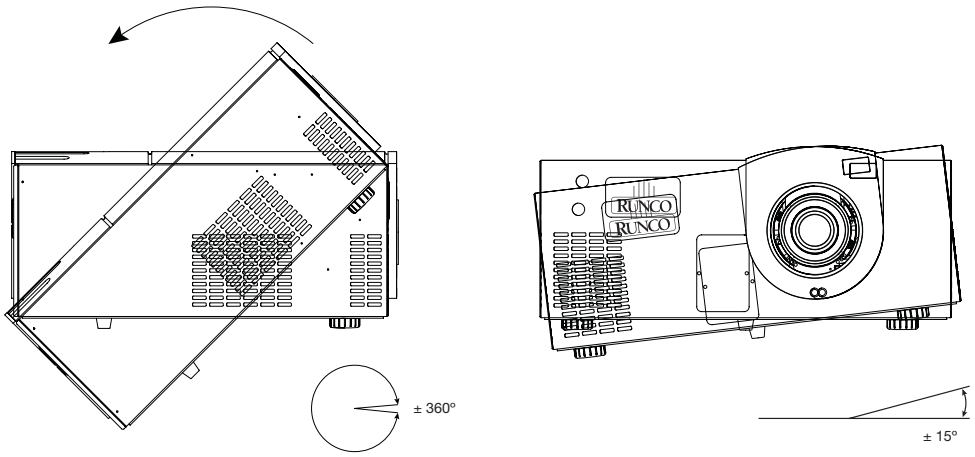

Figure 3-7. Mounting Angle Ranges (Front-to-Back and Side-to-Side)

For a floor (non-AutoScope) installation, turn the two adjustable feet on the bottom of the projector to adjust the projection angle.

If you do either of these things, you may need to make keystone adjustments or vertically shift the image using the on-screen display (OSD) controls, to compensate. For detailed instructions, refer to ***Using the On-Screen Menus*** on page 57.

3.7 Connections to the VX-40d/-50d/-60d/-80d and DHD Controller

Proceed as follows to connect the DHD Controller to the VX-40d/-50d/-60d/-80d, your video sources, external controller(s) – if present – and AC power.

When connecting your equipment:

- Turn off all equipment before making any connections.
- Use the correct signal cables for each source.
- Ensure that the cables are securely connected. Tighten the thumbscrews on connectors that have them.

To access the connector panel, pull firmly on the cable access cover to open it.

◄ ***Connector Panel Access***

Connect the DVI, RGBHV and RS-232 outputs from the DHD Controller to the corresponding inputs on the VX-40d/-50d/-60d/-80d; see Figure 3-8.

◄ ***Connecting the DHD Controller to the VX-40d/-50d/-60d/-80d***

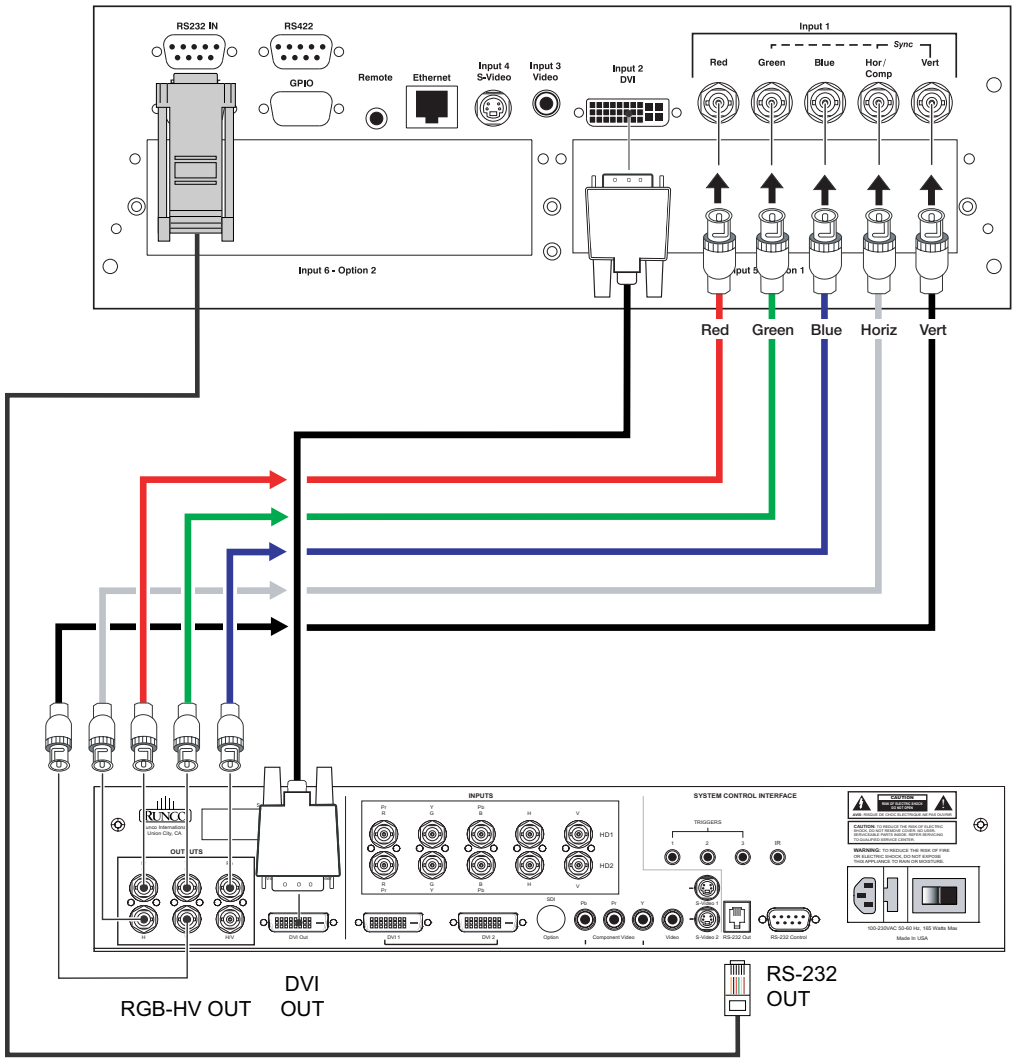

Figure 3-8. Connecting the VX-40d/-50d/-60d/-80d to the DHD Controller

Connecting Source Components to the DHD Controller

Connect your video sources to the DHD Controller as shown and described in the sections that follow.

DVI Connections: See Figure 3-9.

Tip

Use the DVI inputs whenever possible. This ensures the highest video quality because the signal is carried in the digital domain throughout the entire signal path, from source component output into the projector.

Note

You can also connect computers with DVI output to these inputs. However, accepted VESA standard resolutions are limited to VGA (640x480), SVGA (800x600), XGA (1024x768) and SXGA (1280x1024) at 60Hz refresh.

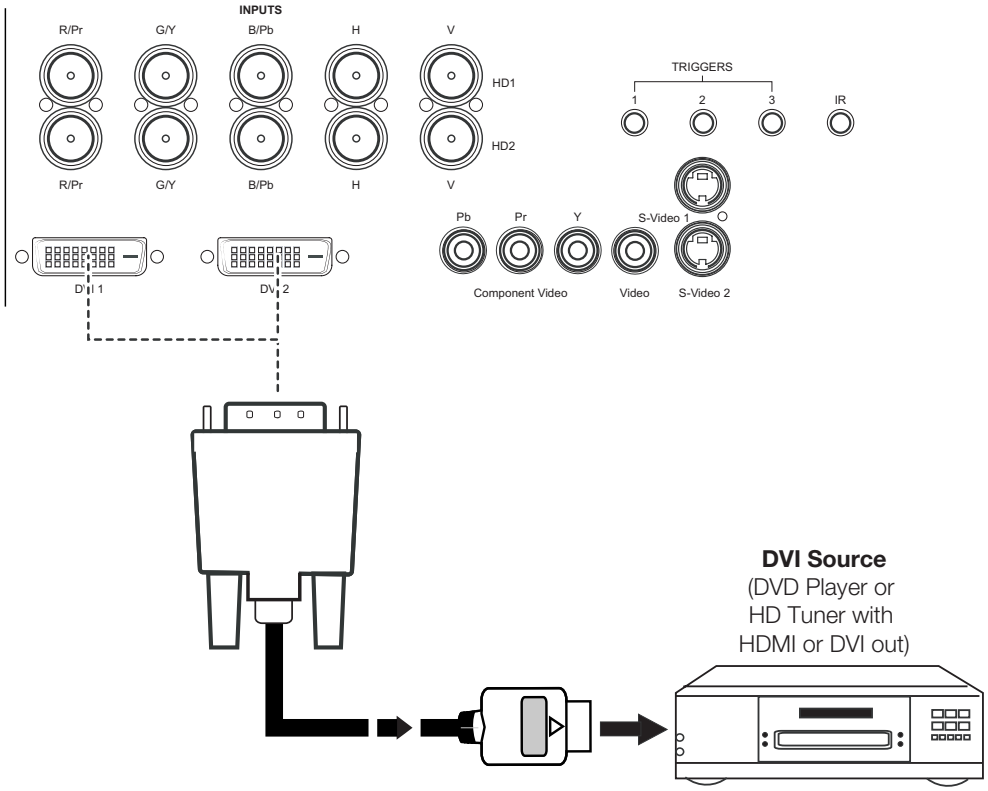

Figure 3-9. DVI Source Connections

Digital (DTV) RGB or Component Video Connections: See Figure 3-10.

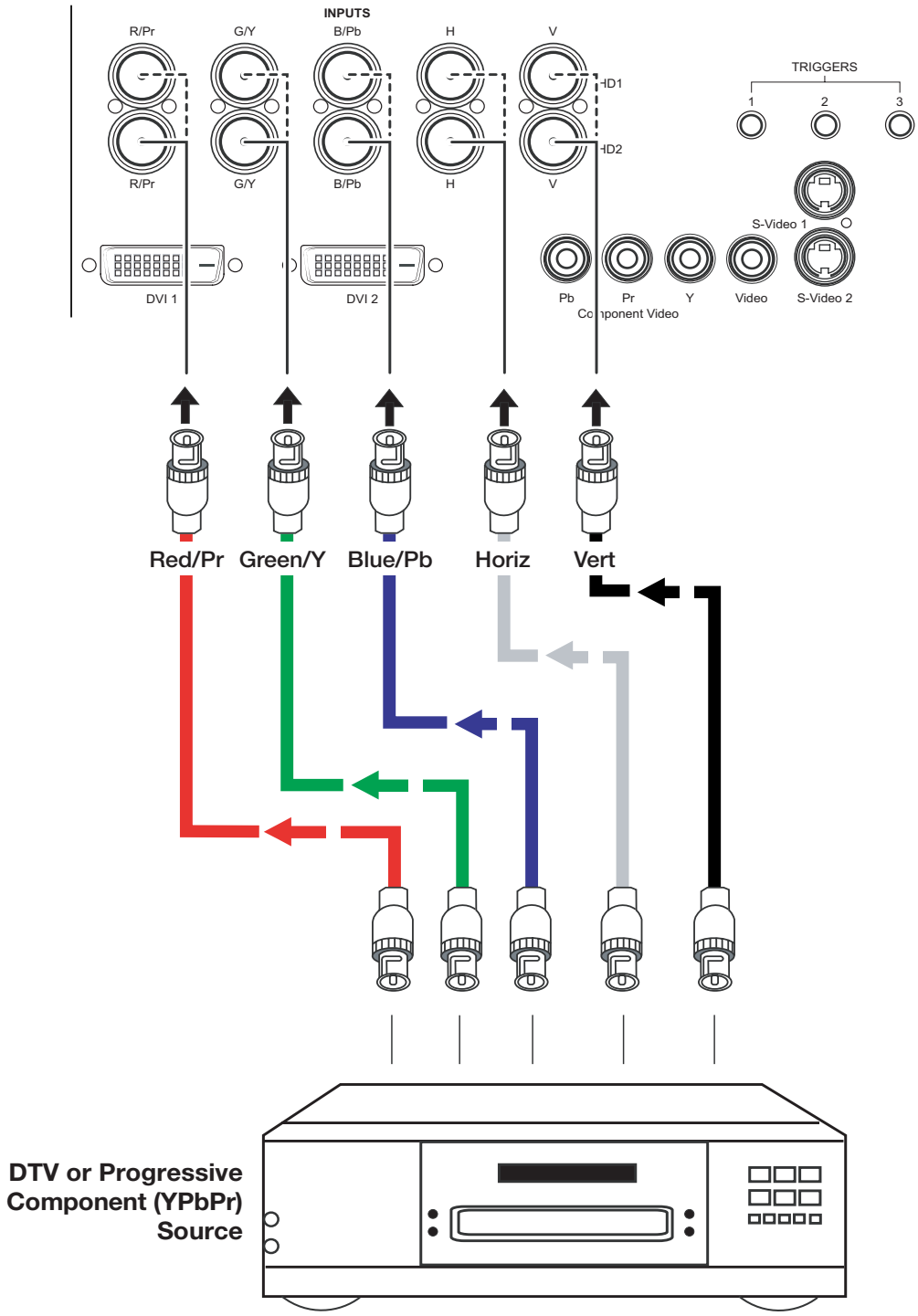

Figure 3-10. Digital (DTV) RGB or Component Video Connections

Analog (Computer) RGB Connections: See Figure 3-11.

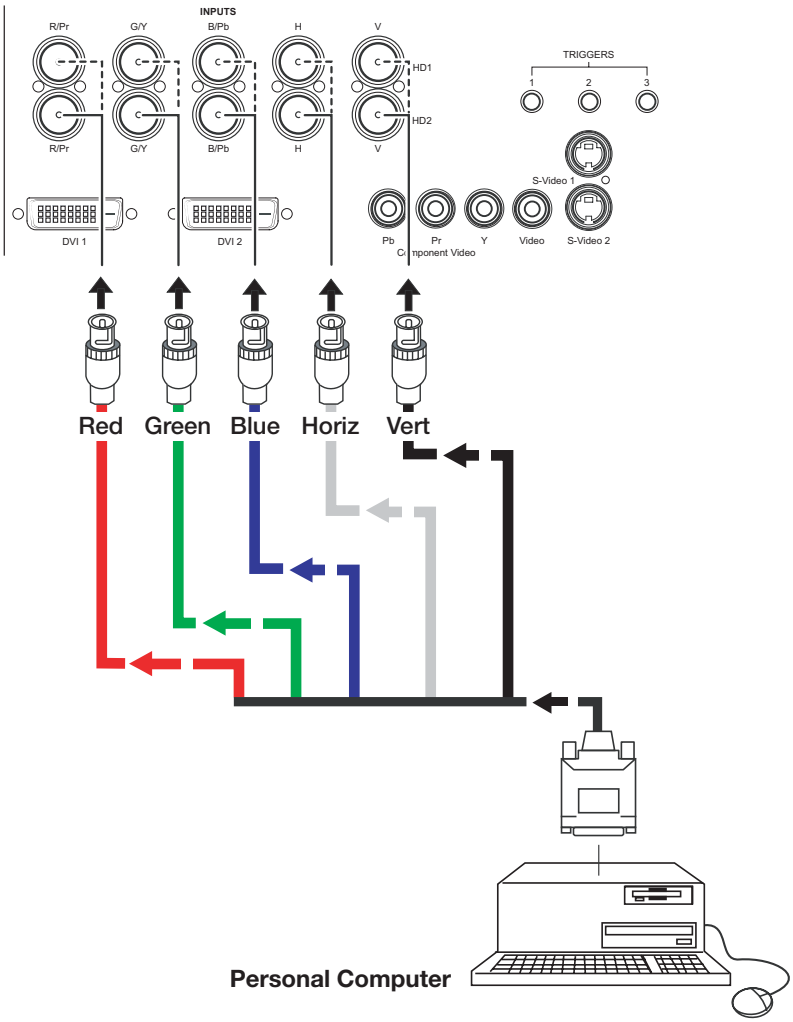

Figure 3-11. Analog RGB Connections

Composite/S-Video/Component Video Connections: See Figure 3-12.

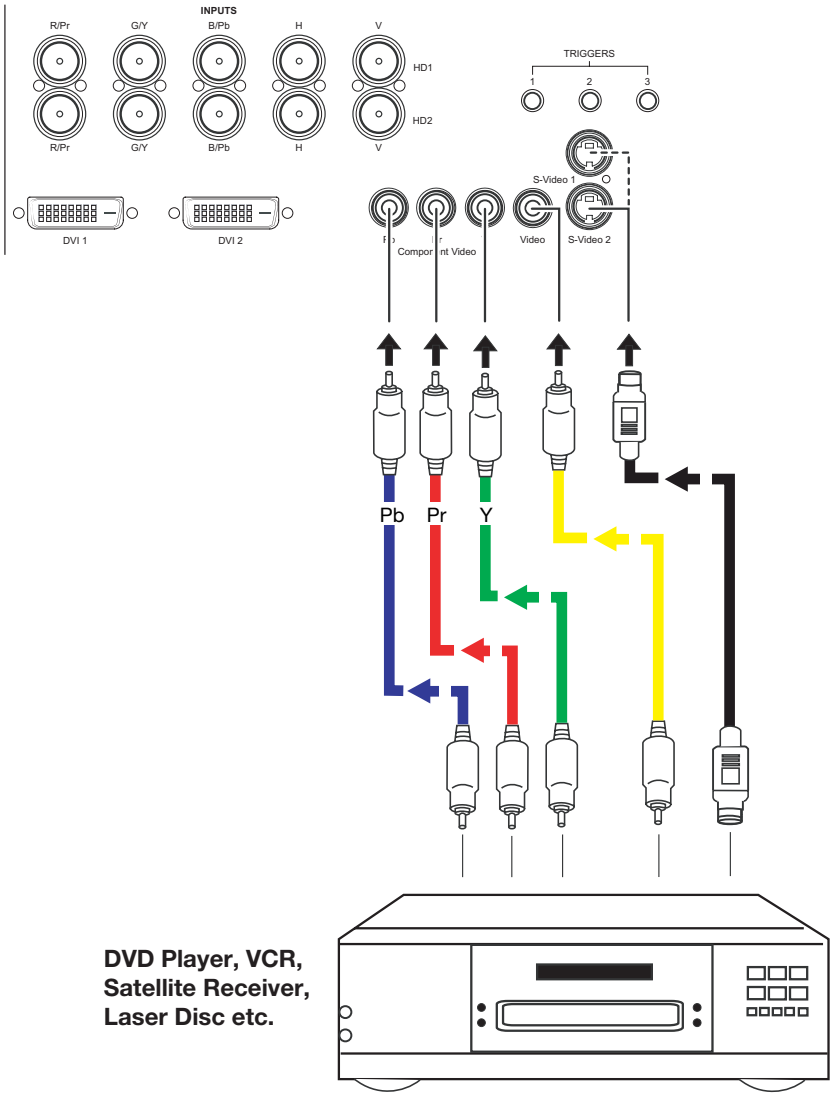

Figure 3-12. Composite, S-Video and Component Video Connections

RS-232 Controller Connection ➤

Use a standard, 9-pin RS-232 cable to connect a PC or home theater control/automation system (if present) to the RS-232 Control port on the DHD Controller; see Figure 3-13.

For more information about using this connection, refer to ***Serial Communications*** on page 83.

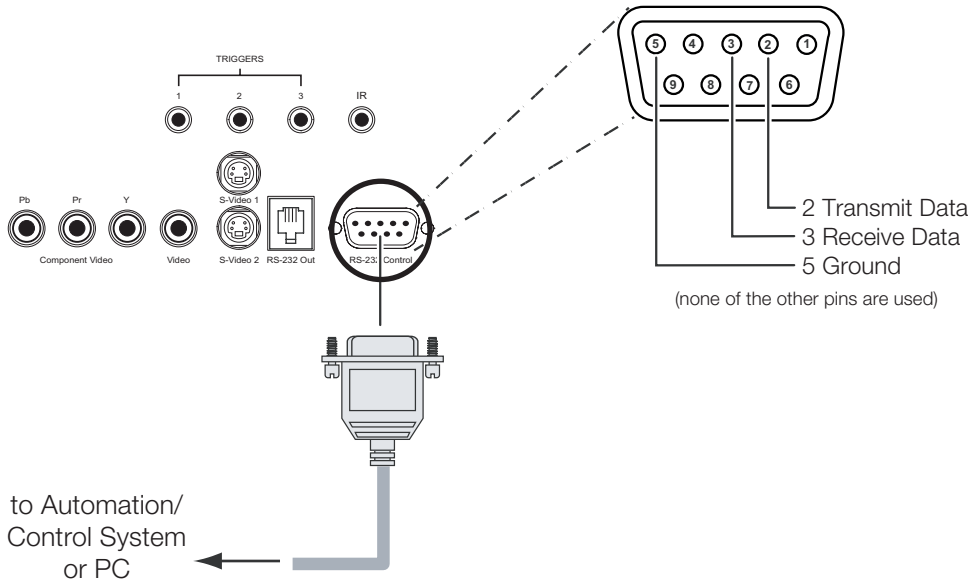

Figure 3-13. RS-232 Control System Connection

Connecting 12-Volt Trigger Outputs to External Theater Components ➤

If your VX-40d/-50d/-60d/-80d is equipped with a CineWide with AutoScope system, connect the AutoScope lens motor to a 12-volt trigger output on the DHD Controller; see Figure 3-14.

Similarly connect other 12-volt trigger-activated equipment (such as retractable screens or screen masks) to the other trigger outputs.

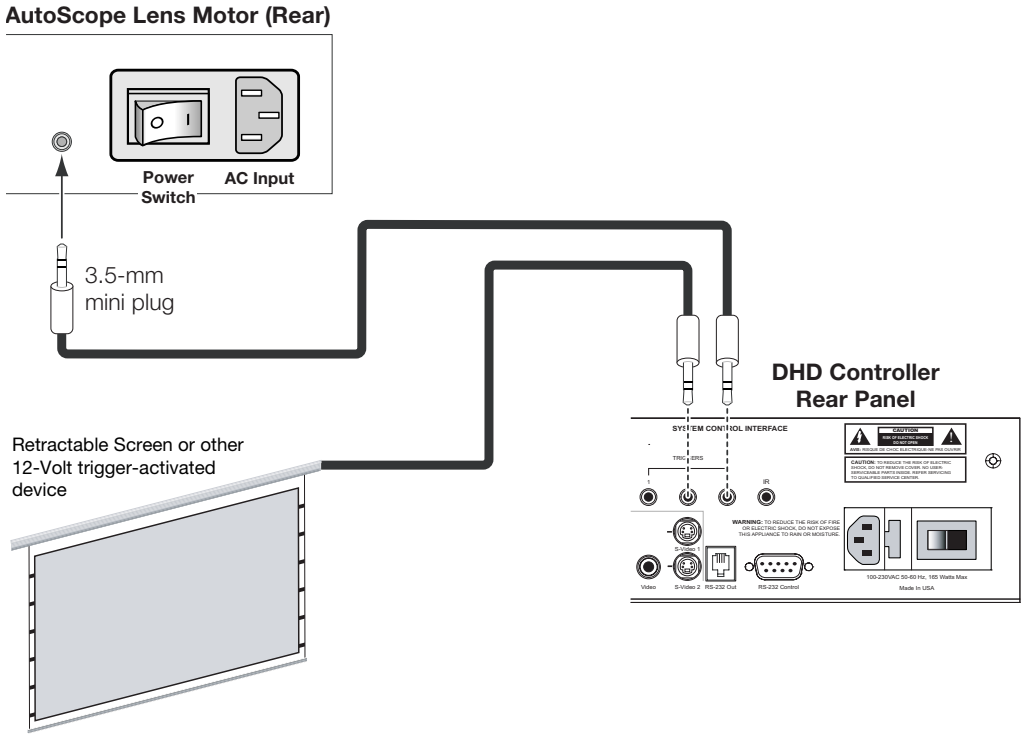

Figure 3-14. Connecting 12-Volt Trigger Outputs

Connecting to AC Power

The VX-40d/-50d/-60d/-80d system includes two (2) AC power cords (one each for the DHD Controller and projector).

DHD Controller: Plug the female end of one power cord into the AC receptacle on the rear of the DHD Controller. Connect the other end to your AC power source (100 to 240 VAC).

Projector: Similarly connect the VX-40d/-50d/-60d/-80d to a nearby AC outlet. The input voltage to a VX-40d or VX-60d must be between 100 and 240 VAC. The input voltage to a VX-50d or VX-80d must be between 200 and 240 VAC.

The LED status window displays an active pattern of segments to indicate the projector is changing its state from powered down to powered up. “--” appears in the display when the projector is ready to be turned on.

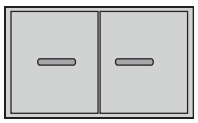

AutoScope Lens Motor: With AutoScope-equipped projectors, a third power cord is provided for the lens motor. Plug the female end of the AC power cord into the AC receptacle on the rear of the lens motor assembly. Connect the other end to a 110 VAC power source.

Caution

The input voltage to the AutoScope lens motor must be between 100 and 120 VAC. ***Do not connect the AutoScope lens motor to a 200-240 VAC power source!***

3.8 Turning on the Power

1. Turn on your source components.
2. Turn on the main power switch at the rear of the DHD Controller.
3. If this is an AutoScope-equipped projector, turn on the main power switch at the rear of the AutoScope lens motor. The lens motor power switch is located next to the AC input (see Figure 3-14).
4. Press the **ON** button on the remote control – or the **POWER** button on the DHD Controller front panel – to turn on the system. The vacuum fluorescent display on the DHD Controller front panel briefly displays “Starting Display.”

   The LED status window at the rear of the projector displays an active pattern of segments to indicate that it is changing its state from “standby” to “on.”
5. When the projector has completed its initialization and is ready for use, “On” appears in the projector LED status window.

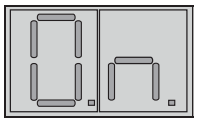

   The fluorescent display on the DHD Controller indicates the active source, signal format (NTSC or PAL), input resolution and aspect ratio; for example:

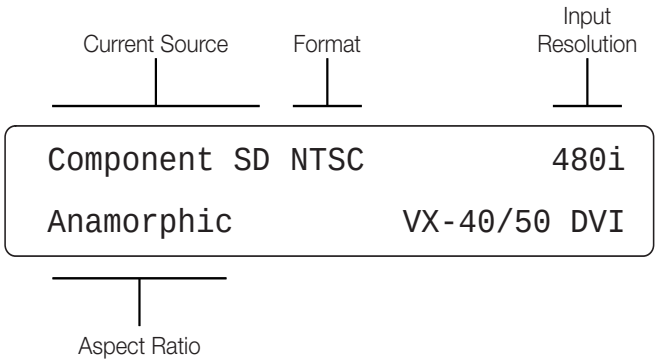

3.9 Selecting the Input Source

By default, the VX-40d/-50d/-60d/-80d is configured to display the signal received on Input 1 (**RGB**). To use Input 2 (**DVI**) instead:

1. On the DHD Controller, press **MENU** and enter the Service Menu passcode.

   Note *You must enter a passcode to access the Service menu.*

2. Select **Service** from the Main Menu.
3. Select **Display Device** from the Service Menu.
4. Press ▼ to select **DVI/HDMI**, then press **ENTER**.

3.10 Adjusting the Picture Orientation

By default, the VX-40d/-50d/-60d/-80d is configured for a “floor/front” installation, in which the projector is installed upright and in front of the screen. If it is installed behind the screen and/or mounted on a ceiling, you must change the picture orientation. To do this:

1. On the DHD Controller, press **MENU** and enter the Service Menu passcode.
2. Select **Service** from the Main Menu.
3. Select **Display Device** from the Service Menu.
4. Select **Configure** from the Display Device menu, then select **Installation**.
5. Choose Floor/Rear, Ceiling/Front or Ceiling/Rear, to match the installation method.

3.11 Primary Lens Adjustments

To access the motorized primary lens controls:

1. On the DHD Controller, press **MENU** and enter the Service Menu passcode.
2. Select **Service** from the Main Menu.
3. Select **Display Device** from the Service Menu.
4. Select **Configure** from the Display Device menu, then select **Lens**.

The Lens menu gives you a great deal of control over the picture size, position and focus:

◄ ***Focus***

To focus the projected image, use the cursor buttons to highlight “In” or “Out.” Then, press and hold the **ENTER** button.

◄ ***Zoom***

To make the picture smaller (zoom out), use the cursor buttons to highlight the minus sign (-). Then, press and hold the **ENTER** button.

To enlarge the picture (zoom in), use the cursor buttons to highlight the plus sign (+). Then, press and hold the **ENTER** button.

◄ ***Vertical and Horizontal Lens Shift***

To change the lens position, use the cursor buttons to highlight “Left,” “Right,” “Up” or “Down” in the Lens menu. Then, press and hold the **ENTER** button to shift the lens in that direction.

3.12 Installing and Adjusting the CineWide Anamorphic Lens

If you are installing a CineWide-equipped projector, proceed as follows to install and adjust the anamorphic lens.

Note ***It is extremely important that the primary lens is properly adjusted before you install the anamorphic lens. Ensure that the 16:9 or 4:3 image from the primary lens is perfectly centered on the screen.***

Attach Lens Mounting Assembly to Lens Motor Carriage Plate (CineWide with AutoScope) or Base Plate (fixed CineWide) ➤

1. Remove the two Z-Adjustment Levers and 1/4-20 Fiber Washers from the bottom of the lens mounting assembly.
2. Place the Lens Mounting Assembly on top of (or under, if the projector is inverted) the Lens Motor Carriage Plate or Base Plate, so that the two threaded posts at the bottom of the Z-Adjustment Plate pass through the corresponding slots on the carriage plate or base plate.
3. Secure the Lens Mounting Assembly to the plate with the Z-Adjustment Levers and Washers that you removed in Step 1.

Note *If this is an AutoScope installation, leave enough space between the projector and the lens mounting assembly to allow the lens to move out of the light path without the assembly coming into contact with the projector front jewelry.*

(Skip this step if you are installing a fixed CineWide anamorphic lens.)

◄ ***Configure Lens Motor Trigger (CineWide with AutoScope)***

CineWide with AutoScope maintains constant image height independent of the aspect ratio, while using the full display resolution of the projector. It accomplishes this by moving the anamorphic lens in front of the primary lens when widescreen material is being viewed. When the viewer transitions back to 16:9 or 4:3 source material, the anamorphic lens moves out of the light path.

To configure the lens motor trigger on the DHD Controller for proper AutoScope operation:

1. Press **MENU** on the remote control and enter the Service menu passcode.
2. Select **Service** from the Main menu.
3. Select **Triggers** from the Service menu.
4. Assign the trigger output to which the lens motor is connected to the Cinema and Virtualwide 2.35 aspect ratios. This enables the lens motor to move the anamorphic lens into position (in front of the primary lens) when either aspect ratio is selected.
5. To save the trigger settings, press ▼ repeatedly to highlight “Save.” Then, press **ENTER**.
6. Select the Cinema or Virtualwide 2.35 aspect ratio to move the anamorphic lens into position, if it isn’t already. To do this, press **CINEMA** or **SVC** on the DHD Controller remote control (Figure 2-6), or press ▲ or ▼ repeatedly with no menus visible on-screen.

Horizontal Position (X) Adjustment:

◄ ***Adjust the Anamorphic Lens***

1. Project a white field on the screen.
2. Loosen the Yaw/X-Adjustment Levers underneath the lens.
3. Slowly move the anamorphic lens into place so that there are no shadows on either side of the screen:

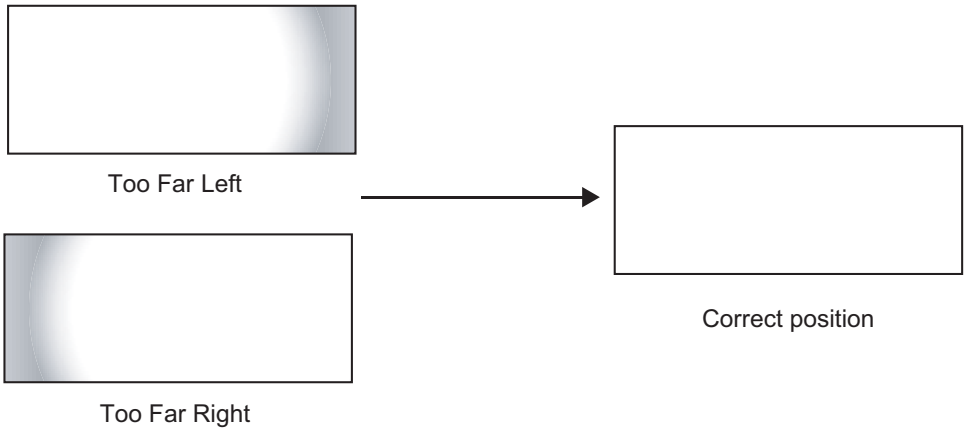

4. When the horizontal position is properly set, tighten the Yaw/X-Adjustment Levers to secure the lens in place.

Height (Y) Adjustment: With the white field still on-screen, loosen the Height Adjustment Levers on either side of the lens. Then, slowly move the anamorphic lens into place so that there are no shadows on the top or bottom of the screen:

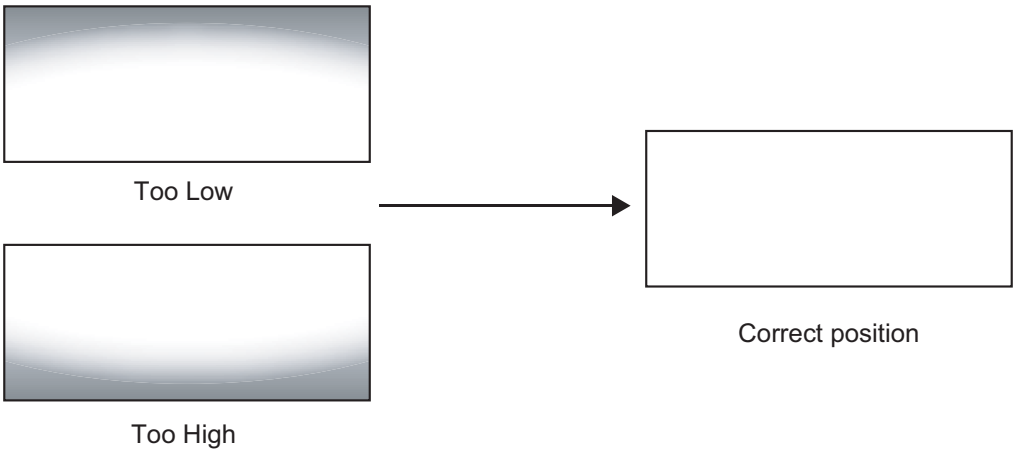

When the height is properly set, tighten the Height Adjustment Levers to secure the lens in place.

Pitch (Angle): Next, angle the lens to even out any top-to-bottom pincushion distortion. To do this, loosen the Pitch Adjustment Levers (directly above the Height Adjustment Levers) on either side of the lens to allow it to pivot freely. Then, adjust the anamorphic lens angle so that the projected image is rectangular:

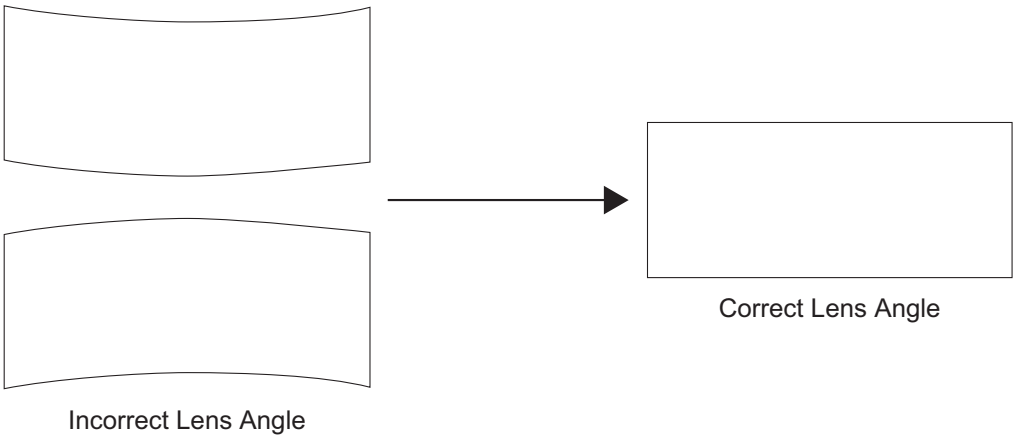

The anamorphic lens will almost always be angled with respect to the projector; this is normal.

Once the proper lens angle has been set, firmly tighten the Pitch Adjustment Levers to secure the lens in place.

Note

There may be some pincushion distortion even after the lens is properly adjusted, especially at shorter throw distances. If this is the case, Runco recommends that you slightly over-scan the image into the screen frame area to mask the distortion.

Yaw Adjust: Loosen the Yaw/X-Adjustment Levers to allow the lens to pivot freely from side to side. Then, angle the lens to even out any left-right pincushion distortion:

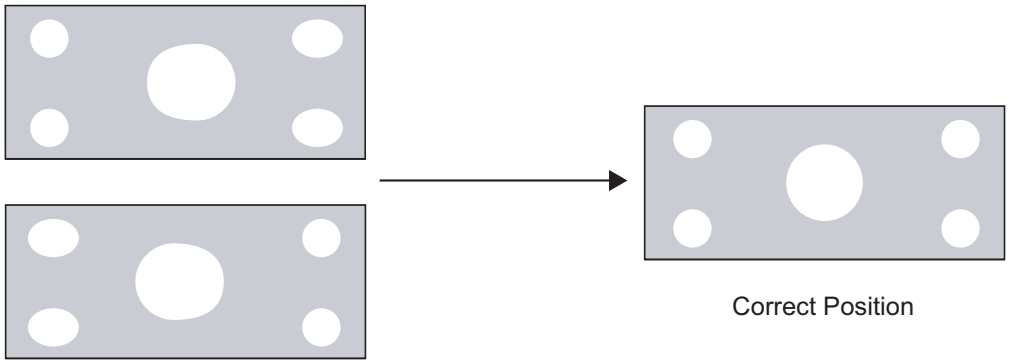

Once the proper lens angle has been set, firmly tighten the Yaw/X-Adjustment Levers to secure the lens in place.

Geometry:

1. Input an anamorphic cross-hatch test pattern to the DHD Controller.
2. Loosen the three Lens Rotation Set Screws (shown at right) on the lens adapter plate just enough to allow it to rotate freely.

3. Grasp the lens by the front ring and rotate the lens until the image is properly anamorphic:

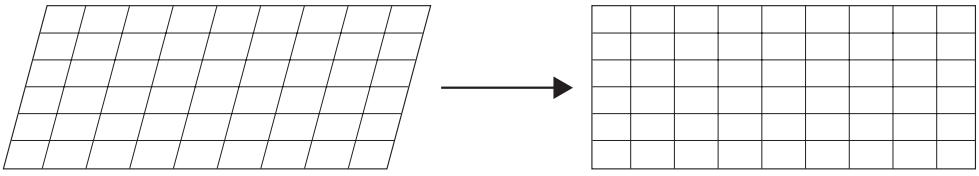

4. When the image geometry appears correct, tighten the three Lens Rotation Set Screws to secure the lens in place.

Focus: Finally, rotate the Focus Ring on the anamorphic lens to fine-tune the optical focus. When finished, hand-tighten the Focus Rotation Set Screw to lock the lens in position.

3.13 Calibrating Projector Inputs

After you have installed and adjusted the projector and lens (or lenses), you are ready to begin calibrating the RGBHV input (Input 1) to the VX-40d/-50d/-60d/-80d.

Note

Runco calibrates both the VX-40d/-50d/-60d/-80d and DHD Controller at the factory for optimum performance in most typical home cinema environments, before the system ships.

Carefully assess the displayed image quality before proceeding with calibration. In most cases, it is not necessary to calibrate the projector inputs, as the DHD Controller gives you as much control as you will need over the image quality.

Only ISF-certified installation technicians should attempt the calibration procedures described here, and ONLY if absolutely necessary to accommodate an atypical installation.

Before proceeding, set the Display Device Input Source to **RGB** at the DHD Controller (refer to ***Selecting the Input Source*** on page 36). When finished calibrating Input 1, repeat the procedure described in this section for Input 2 (DVI), if that input is being used.

To perform the calibration, you will use the projector rear-panel keypad (Figure 2-3) or TheaterMaster Remote Control, shown in Figure 3-15 and described on the pages that follow. Once you have completed the projector input calibration, the end user can use the DHD Controller Remote Control (Figure 2-6) to adjust input image quality, change aspect ratios, switch between sources and more. (The exception to this rule is when sources are connected directly to the projector. Although this is technically possible, Runco advises against this.)

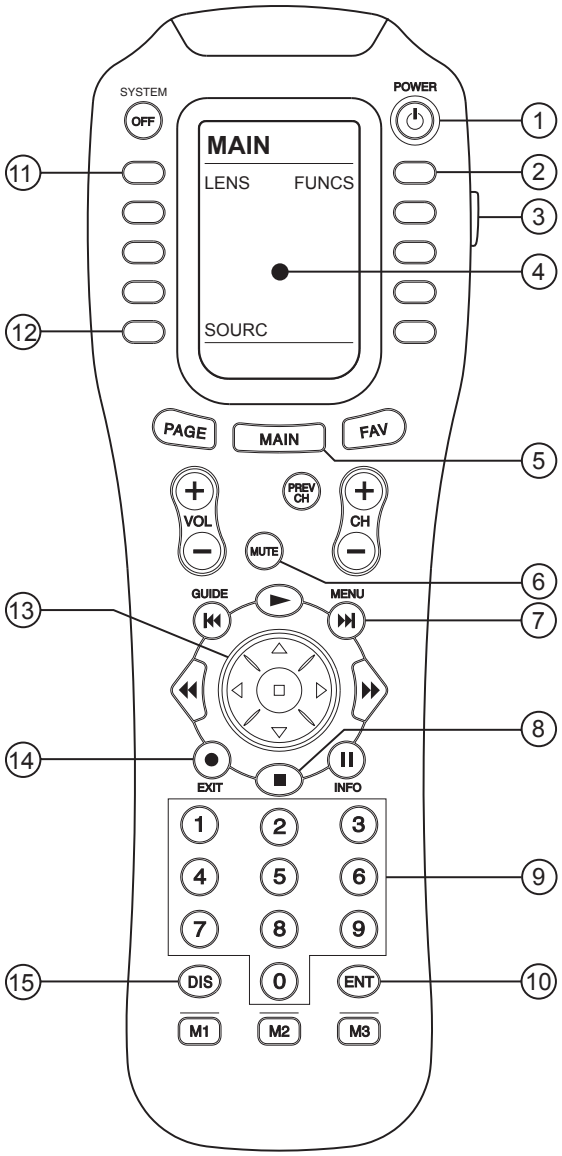

Figure 3-15. TheaterMaster Remote Control for VX-40d/-50d/-60d/-80d

TheaterMaster Remote Control Functions ➤

1. **POWER Button**
   Hold this button down for 1-2 seconds to turn on or off the projector.
2. **FUNCS Button**
   This button brings you to a sub-page in which you can access the projector's internal test patterns, view help text, auto-calibrate the projector and perform various other functions.
3. **BACKLIGHT Button**
   Lights the LCD display and buttons for use in a dark room.
4. **LCD Display**
   Displays currently-selected LCD Menu page.
5. **MAIN Button**
   Brings up the Main LCD Menu page.
6. **MUTE Button**
   Activates the Shutter control on the projector. Press and hold for 1-2 seconds to activate the shutter, and press and hold again to de-activate the shutter.
7. **MENU Button**
   Displays or hides the on-screen projector menu.
8. **ENTER Button**
   Though it has a 'stop' icon (and can be programmed as such for other sources), this button serves as an 'ENTER' button for the projector when navigating through the menus.
9. **Numeric Keypad**
   Used for entering numeric values or passcodes. Also allows direct selection of numbered on-screen menu items.
10. **ENTER Button**
    Same as 8.
11. **LENS Button**
    Brings up the lens adjustment LCD Menu for making zoom, focus and shift adjustments.
12. **SOURC Button**
    Brings up the projector's source selection LCD Menu.
13. **Directional Keypad**
    The directional keypad (large, black button just above the numeric keypad) behaves similarly to a joystick. Press the left or right side of this button to change a slidebar value or to select a different option within a pull-down list without having to first scroll through options. Press the top or bottom of this button to navigate within a menu, pull-down list or text box.
14. **EXIT Button**
    When in the menu structure, the EXIT button brings the menu back one page or cancels the current function.
15. **FUNCTION Button**
    Though labeled **DIS**, this button has been programmed as a "function" button used in several menu items. (You can also use the **FUNCN** button in the Functions LCD Menu.)

◄ *Navigating the Projector Menus*

Most of the controls for the projector are accessed from within the projector's menu system. There are several groups of related functions, with each group selectable from the Main Menu. Press **MENU** on the rear keypad or TheaterMaster remote to display this menu.

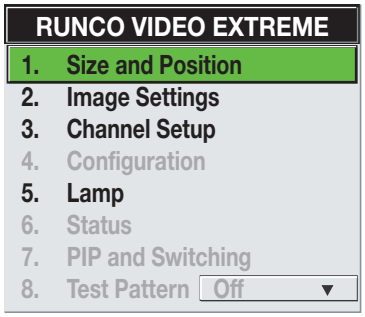

To select a sub-menu using the remote keypad, do one of the following:

- Press the number key corresponding to the function menu you wish to access, such as **2** for the Image Settings menu.
- Press ▲ or ▼ on the directional keypad to highlight the desired option, then press **ENTER** or ▶.

The corresponding function menu or pull-down list of further options will then appear.

You navigate the function menus in a similar manner: enter a menu option number for any numbered option, or use the ▲ and ▼ keys to highlight the desired option, then press **ENTER**. Extra long menus have a scroll bar on the right; use the arrow keys to access the remainder of the menu. Locked items or items that do not pertain to the current action or condition appear dimmed and cannot be selected.

Note

1. *If there is no signal present, all source-dependent adjustments are disabled.*
2. *After 15 minutes of inactivity, the projector leaves the menu system and returns to the presentation.*
3. *The Status menu is read-only.*

When finished with a function menu, do one of the following:

- Press **EXIT** to return to the previous screen.
- Press **MENU** to leave the menu system and return to the presentation.

To set up the VX-40d/-50d/-60d/-80d for use with the DHD Controller, you will use the **Channel Setup, Size and Position**, **Image Settings** and **Lamp** menus.

◄ *Channel Setup*

The projector stores and automatically recalls up to 50 different channels (source setups) for a variety of inputs. This memory feature allows you to define and conveniently use a wide variety of customized setups rather than having to repeatedly re-configure the projector for different presentations. Each projector input can have several different channels associated with it.

All available channels are listed in the Channel Setup menu (Figure 3-16), which describes how each channel can be accessed and which serves as the gateway for editing, copying and deleting channels.

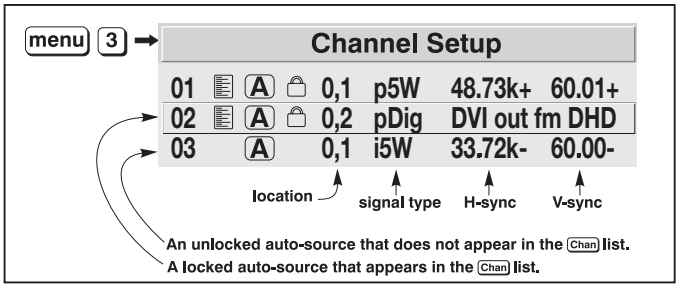

Figure 3-16. Channel Setup Menu

To display the Channel Setup menu, press **3** or highlight **Channel Setup** and press **ENTER** or ▶. The Channel Setup menu appears with the active channel highlighted.

WHAT APPEARS IN THE CHANNEL SETUP MENU? This menu lists all channels defined so far and indicates where they are connected on the input panel.

The far left column lists channel numbers currently defined. The values in the far right columns indicate horizontal and vertical frequencies — if someone has defined a name for this channel, it appears here instead. Remaining columns contain details pertaining to each channel setup, such as its switcher number (always 0 = projector), slot location, a variety of icons indicating access to each channel, and an abbreviated description of each signal type.

Signal Type Abbreviations: The Channel Setup menu identifies signal types in a shortened form. These descriptors indicate what signal information the projector uses to identify a match for a given channel, and are preceded by either an “i” (for interlaced signals) or “p” (for progressive signals).

When used with the DHD Controller, the RGB-HV output signal is represented by “p5W” or “i5W.” The DVI output signal is either “pDig” or “iDig.”

Copying Channels: Channels are pre-configured at the Runco factory for use with the DHD Controller, and are locked to prevent the factory settings from being over-written accidentally. Before proceeding with calibration, copy the existing channel for the current input to a new channel so that any changes you make are stored in that channel.

To copy a channel:

1. Select **Channel Setup** from the Main Menu to display the Channel Setup menu.
2. Highlight the channel you want to copy in the Channel Setup menu.
3. Press **FUNCN** (or **DIS**) to go to the Channel Copy/Delete submenu.
4. Select **Copy** and press **ENTER**. This creates a new channel that is identical to the original – which remains – but it is identified with the next available number from 01 to 50. If you change your mind and do not want to copy the current channel, press **EXIT** to cancel and return to the previous menu. Copying channels is a quick way to create numerous channels, each of which can then be edited and adjusted for a variety of presentations in the future.

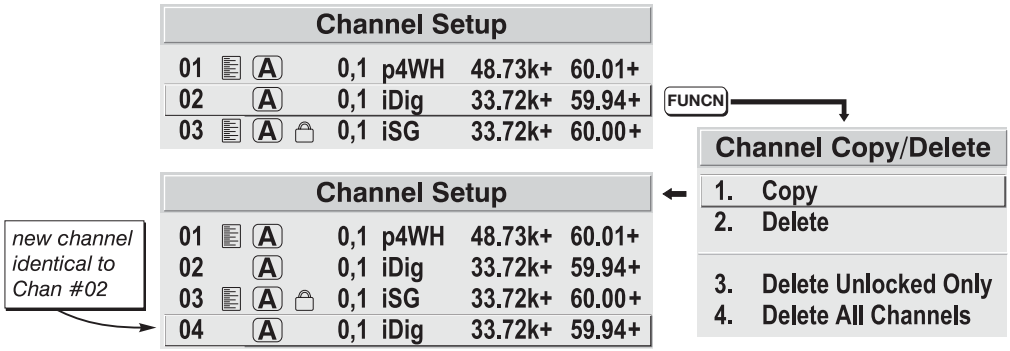

Figure 3-17. Copying a Channel

Use the Auto Setup feature of the VX-40d/-50d/-60d/-80d as a convenient starting point for calibrating the projector inputs for optimum picture quality.

◄ ***Auto Setup***

Note *You cannot use Auto Setup with a locked channel. Copy the locked, factory-default channel for the current input to a new channel before using Auto Setup; refer to* ***Copying Channels*** *on page 46.*

Auto Setup is an automated process in which the projector quickly optimizes critical display parameters such as size, position and pixel tracking, based on the type of incoming video signal. An Auto Setup allows you to quickly get the image “in the ballpark” after which you can perform further calibration, if necessary.

To perform an Auto Setup, do one of the following:

On the Theater Master Remote Control: Press **FUNCS**, then **AUTO** followed by **Enter**. When the Auto Setup completes, press **Enter** again to keep the new settings.

On the Projector Rear Keypad: Press **AUTO SETUP** followed by **Enter**. When the Auto Setup completes, press **Enter** again to keep the new settings.

On the DHD Controller Remote Control: Press **MENU**, then select **Service** from the Main menu. Select **Display Device** from the Service Menu. Finally, select **Configure** from the Display Device menu, then select **Auto Setup**.

What an “Auto Setup” Does: Auto Setup sets the following parameters to their default values:

- Contrast
- Brightness
- Auto Input Level (off)
- Detail (if video source)
- Filter
- Luma Delay

Auto Setup also optimizes the following settings, based on the characteristics of the incoming signal:

- Pixel Tracking
- Pixel Phase
- Size and Blanking
- Vertical Stretch
- Position
- Input Levels

If additional fine-tuning is necessary after performing an Auto Setup, continue with the next section.

Size and Position Menu ➤

Size and Position		
1.	Resize Presets	No Resizing ▼
2.	Size	1000
3.	Vertical Stretch	1000
4.	Pixel Track	858
5.	Pixel Phase	0
6.	H-Position	360
7.	V-Position	262
8.	Reserved	
9.	Reserved	
0.	Advanced Size and Position	

In the Size and Position Menu, you can increase or decrease the size of your image, change its proportion (aspect ratio), move the image to a specific area of the screen, and refine other related parameters. Use Size and Position controls to match the image precisely to the screen. Changes made in the Size and Position menu take effect immediately and are saved when you exit the menu.

Resize Presets: Select a Resize Presets option to quickly display an image in its native resolution or to automatically resize an image to closely fill the projector's native resolution, or to optimize the display width or height.

The native resolution is model-dependent, as follows:

- **VX-40d or VX-50d:** 1280 x 720 (16:9 native aspect ratio)
- **VX-60d or VX-80d, 788p models:** 1400 x 788 (16:9 native aspect ratio)
- **VX-60d or VX-80d, 1050p models:** 1400 x 1050 (4:3 native aspect ratio)

Note

The "native" aspect ratio is with the primary lens only. With an anamorphic lens in the light path, the aspect ratio is 16:9 with the VX-60d and VX-80d (1050p models), and 2.35:1 with all other models.

Size, Position and Blanking parameters automatically adjust accordingly. If Blanking is set first, which defines an Active Input Area, Resize Preset scaling occurs in this region of interest only.

For use with the DHD Controller, the default setting is **No Resizing**. This is almost always the appropriate setting. Do not change it unless specifically instructed to do so by Runco Technical Support.

- **No Resizing:** Select No Resizing to display the image in its native resolution, which may or may not match the projector's resolution. For example, for a computer display with a native resolution of 800 x 600, "No Resizing" will use the central 800 x 600 pixels and have a black border— the black border areas are unused areas.

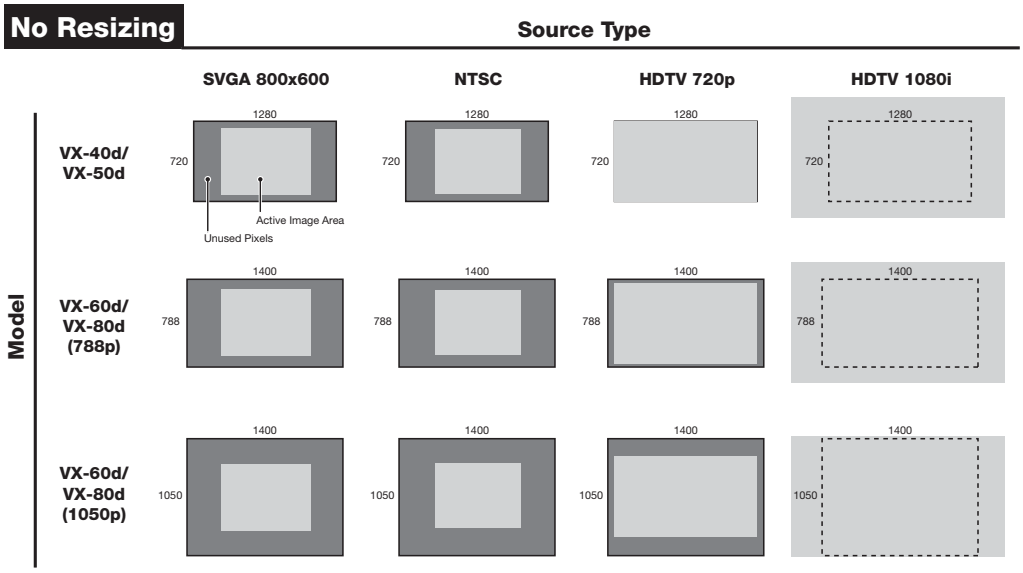

Figure 3-18. Resize Presets: No Resizing

Other resizing options are described below, for the sake of completeness. In actual practice, though, they are rarely (if ever) used when the VX-40d/-50d/-60d/-80d is used with the DHD Controller.

- **Default Resizing:** When you select a new source, the image utilizes as much of the projector's display area as possible for the type of incoming source data, but with minimal or no changes to aspect ratio. The image will be centered and displayed as large as possible depending on the source type and projector model:
  - A video image or 4:3 graphic image is enlarged to fill either the whole screen (VX-60d/-80d, 1050p models) or the screen height, centered between black side bars (all other models).
  - A 5:4 graphic image is enlarged to fill the screen height and is centered between black side bars.
  - An anamorphic (16:9) image will either fill the width and be centered between black bars on top and bottom (VX-60d/-80d, 1050p models) or fill the whole screen (all other models).
- **Full Size:** Select Full Size to use all pixels for displaying the image, regardless of source or original aspect ratio. Incoming source material having a different aspect ratio than the projector will be stretched to fill the display.
- **Full Width:** Select Full Width to fill the projector's display from left-to-right without changing the original aspect ratio of the image. Depending on the source, data at the top and bottom may be discarded (cropped), or the display may have black borders at the top and bottom (called "letterbox").
- **Full Height:** Select Full Height to fill the display from top-to-bottom. Depending on the source, this may create borders.
- **Anamorphic:** Select Anamorphic to display an anamorphic image in its native 16:9 aspect ratio. The image will either fill the width and be centered between black bars on top and bottom (VX-60d/-80d, 1050p models) or fill the whole screen (all other models).
- **"Custom" Resizing:** The "Custom" re-size descriptor automatically appears in the Size and Position menu when any of the values for Size, Vertical Stretch, H-Position, V-Position or Blanking do not correspond to those for a preset. This option is not offered in the Resize Presets pull-down list.

Size: "Size" controls both the image width and height in tandem, maintaining the current aspect ratio (proportion) of the displayed signal data.

Vertical Stretch: "Vertical Stretch" adjusts the height of the image while keeping the width constant. Use Vertical Stretch to change the aspect ratio of the display.

Pixel Track: Steady flickering or several soft vertical stripes or bands across the entire image indicates poor pixel tracking. Proper pixel tracking helps ensure that the image quality is consistent across the screen, that aspect ratio is maintained, and that pixel phase can be optimized (see below). Tracking determines the frequency of the pixel sampling clock, indicated by the number of incoming pixels per line, so that all pixels generated by a particular source are sampled.

By default, the projector samples at the correct frequency for most sources. For best results, use a good test pattern such as a smooth gray consisting of a clear pattern of black and white pixels, or a similar "half on, half off" graphic image. Adjust the slidebar until the vertical stripes broaden to the point where one large stripe fills the image. If the image still exhibits some shimmer or noise, adjust Pixel Phase (described below).

Pixel Phase: Adjust pixel phase when the image (usually from an RGB source) still shows shimmer or “noise” after pixel tracking is optimized. Pixel phase adjusts the phase of the pixel sampling clock relative to the incoming signal.

Note *Adjust “Pixel Tracking” before “Pixel Phase.”*

For best results, use a good test pattern such as a smooth gray consisting of a clear pattern of black and white pixels, or a similar “half on, half off” graphic image. Adjust the slidebar until the image stabilizes and each pixel is clearly defined. You may notice that you can stabilize the image at more than one point; that is, you may find that the image appearance at “11” is identical to the image appearance at “38.” Use either setting in such cases. If some shimmer from a video or HDTV source persists, use the “Filter” control in the Image Settings menu (described later) to remove high-frequency noise from the signal.

H-Position: This option moves the image right or left within the area of available pixels.

V-Position: This option moves the image up or down within the area of available pixels.

Note *The values shown represent where the approximate center of the image lies in relation to the total number of pixels available horizontally or vertically. This varies widely according to the signal; watch the image while adjusting.*

Image Settings Menu ➤

Use options in the Image Settings menu to alter your image without affecting its size or position. Changes made in this menu are applied immediately and saved when you exit the menu. Options not available for the projector model or source are disabled and appear dim (gray).

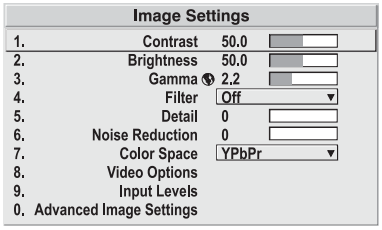

Contrast: “Contrast” increases or decreases the perceived difference between light and dark areas of your image (0-100). For best results, keep it under 50. If contrast is set too high, the light parts of the image lose detail and clarity. If set too low, the light areas will not be as bright as they could be and the overall image will be dim. For best results, start with a low value and increase so that whites remain bright but are not distorted or tinted and that light areas do not become white (“crushed”).

Note *If the environment lighting changes, an adjustment of Gamma is recommended (see below).*

Brightness: “Brightness” increases or decreases the amount of black in the image (0-100). For best results, keep close to 50. Start with a high value and decrease so that dark areas do not become black (“crushed”). Conversely, high brightness changes black to dark gray, causing washed-out images.

Gamma: “Gamma” is a global setting that determines how gray shades are displayed between minimum input (black) and maximum input (white) for all signals. The normal gamma setting of 2.2 is correct for virtually all signals and conditions. If excess ambient light washes out the image and it becomes difficult or impossible to see details in dark areas, lower the gamma setting to compensate.

Filter: The proper filter setting is automatically set for virtually all signals, and rarely needs to be changed. It applies a low pass filter for noise reduction in the incoming input signal, particularly for HDTV or SDTV. Applied in the analog domain before sampling, this filtering removes high frequencies and thus reduces pixel phase noise (note this also reduces signal bandwidth). Override only if standard pixel tracking and phase adjustments do not adequately clear up a “noisy” video signal, or if a graphics signal appears overly “soft.” Both instances indicate that “Filter” may be set to the wrong option.

Detail: “Detail” adjusts the sharpness of a video image so that edges remain clearly defined. It can be particularly useful if a significant “Noise Reduction” adjustment has caused the image to appear too soft. Adjust until the display is as sharp as desired, keeping in mind that because “Detail” adds some high frequencies back into the image, it can also reintroduce a certain degree of noise.

Noise Reduction: Noise Reduction is similar to the “Filter” control, but operates in the post-sampling digital domain with a more subtle effect. Higher settings are most useful for clearing up noisy RGB images such as those from a PC. Adjust as desired, keeping in mind that reducing noise (which reduces high frequencies) may also soften the image.

Color Space: “Color Space” determines how the color components of an analog input signal are decoded for accurate color in the display. With the VX-40d/-50d/-60d/-80d, this should always be set to **RGB**.

Video Options: This sub-menu is not applicable to the VX-40d/-50d/-60d/-80d.

Input Levels (Input 1 only): Good RGB or input levels — that is, the drives and black levels for each of the three primary colors, red, green and blue — ensure that images from analog sources other than decoded video have maximum contrast without crushing black or white.

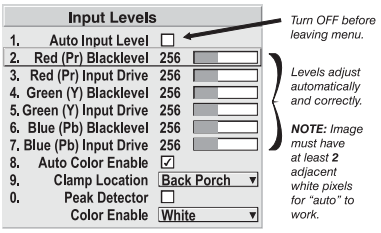

By default (and in an “Auto Setup”), the projector automatically determines the best input levels by monitoring image content and adjusting the controls appropriately; further adjustment is typically not required to obtain proper blacks or whites.

However, for a very unusual source exhibiting one or more overly high black levels (typically caused by a noisy source causing black level spikes), an experienced technician may prefer to use the Input Levels menu (shown above). These adjustments, which together serve as a calibration process compensating for differences in sources and cabling, enable an experienced technician to perfect the source image input levels and eliminate the “overshoot” and “undershoot.” Note that Input Levels are of limited use with digital signals, but do offer some ability to tweak poorly mastered source materials.

Note

1. *Input Levels are not applicable to (DVI) Input 2.*
2. *Because the projector automatically optimizes input levels for all but the most unusual of sources, it is recommended that only experienced technicians use the Input Levels submenu.*
3. *Before beginning, check that overall contrast and brightness settings are near 50 and that color temperature is properly set up on an internal grayscale test pattern.*

- **Auto Input Level:** Keep off for virtually all sources (default). Temporarily enter a check mark only if you are an experienced technician and you have an unusual source that you feel needs further color temperature and/or input level adjustment. After entering a check mark, wait for the six slidebar values to stabilize, then clear the check mark and exit. This compensates for incoming out-of-range drives (white) and black levels (black) that would cause “crushing” of light and dark colors in the image.

Note

1. *There must be at least two consecutive white pixels present in the image for the “Auto Input Level” function to work properly. Otherwise, input levels may produce skewed colors, particularly in non-video images.*
2. ***Uncheck this item before exiting this menu.***

- **Black Levels and Drives:** To check your image and adjust these controls:
  1. Make sure overall “Contrast” and “Brightness” settings are both set to near 50. (Not required for “Auto Input Level” adjustment.)
  2. Check the color temperature setup using an internal grayscale test pattern, making sure to obtain a neutral grayscale. (Not required for “Auto” adjustment.)
  3. If the blacks and/or whites appear OK, input levels do not need adjustment. If black levels are too high (and/or whites are too low, which is rare), you likely have a noisy source that is producing skewed input levels. Continue with Step 4.
  4. Temporarily enable “Auto” in the Input Levels submenu. Wait for all six values to stabilize. Alternatively, do not use “Auto” — reduce black levels manually instead. Judge by eye and change one or more of the six levels as necessary to obtain proper blacks and whites. You may want to see only a certain color while adjusting; if so, use the “Color Enable” option (described below).
  5. Delete the “Auto” check mark and exit the Input Levels menu.
- **Auto Color Enable:** When a check mark is present, selecting a specific black level or drive to adjust will automatically enable the corresponding color in the display. Delete the check mark to see all colors.
- **Clamp Location:** This option (formerly known as sync tip clamping) can brighten the image produced from certain high-resolution, high-frequency graphic sources. For almost all sources, the best clamp location is automatically selected by the projector.
  - Use the normal **Back Porch** location if the image is either sufficiently bright or overly bright.
  - Select **Sync Tip** if the image appears unusually dim, if there are horizontal streaks across the image, or if there is significant color drift. This moves the clamping pulse from the normal back porch location (which is likely too short) to the tip of the horizontal sync pulse.
  - **Tri Level** is typically recommended for an HDTV source where the back porch is also short, or for video sources or any RGB source with sync information included on the video (for example, sync-on-green).

- **Color Enable:** Select which color or colors you want to see in the display. This is useful while working with color temperature white levels or input levels.

When you have finished calibrating Input 1, change the Display Device Input Source to DVI (Input 2) if that input will be used; refer to ***Selecting the Input Source*** on page 36. Then, repeat the procedure described in this section (starting with ***Channel Setup***) for Input 2.

After calibrating projector Input 2, proceed with the next section, ***Working With the Lamp***.

3.14 Working With the Lamp

Access the Lamp menu to:

- Choose a lamp mode for regulating power and light output.
- Change the optical aperture size.
- View information pertaining to past and present lamps.
- Record the lamp serial number in the projector's memory.

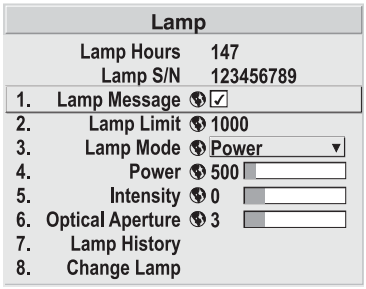

Lamp Hours (read-only): Lamp Hours shows the number of hours logged on the current lamp. Whenever you record a new lamp serial number, the VX-40d/-50d/-60d/-80d automatically resets this value to "0" and begins to log time for the new lamp.

Lamp S/N (read-only): Lamp S/N is the serial number recorded for the current lamp. When you install a new lamp and enter its serial number, the number appears here.

Lamp Message: Enter a check mark for **Lamp Message** to enable a warning message that appears upon power-up when the lamp has reached the specified lamp limit and should be replaced. Delete the check mark to prevent display of this message—instead, when your lamp expires, only the status display messages on the back of the projector will provide a visual warning to replace the lamp.

Note

1. *It is recommended that the Lamp Message check box remain enabled.*
2. *When a lamp warning message appears, press **EXIT** to temporarily cancel the message. The message will continue to appear upon power-up until you install a new lamp.*

Lamp Limit: Set Lamp Limit to the number of hours you expect to log on the current lamp before replacing it. This will trigger a lamp message on-screen (if enabled).

Note

1. *If you change modes over the life of a lamp, the lamp limit you originally expected may no longer be possible.*
2. *Turning the lamp on and off reduces lamp life significantly, as do other factors.*
3. *It is recommended that Lamp Limit not exceed the expected lamp life, otherwise a lamp could become dangerously fragile with overuse.*

Lamp Mode: Select the **Lamp Mode** you want to use in order to control the light output. You can choose to run the lamp as bright as possible, you can power the lamp with a specific wattage appropriate for the installed lamp or you can set a specific intensity (brightness) to maintain. Keep in mind that higher lamp power settings can shorten lamp life.

Use the lamp mode that best suits your brightness needs:

- **Max Brightness:** The lamp will always burn as brightly as possible, driven by 100% of the power level rating for the installed lamp (1,000 Watts for the VX-40d and VX-60d or 1,200 Watts for the VX-50d and VX-80d). Keep in mind that the “maximum brightness” for any lamp gradually diminishes with the “Intensity” option.
- **Intensity:** Brightness will remain close to a specified level for as long as possible. If you select this option, enter a number representing the intensity level (brightness) you want to maintain — the VX-40d/-50d/-60d/-80d automatically adjusts power as needed to maintain this intensity as closely as possible.

This value and slidebar represents the current brightness of your lamp, decreasing over time when you are operating in Max Brightness mode or at a specific Power level. When you operate in Intensity mode, this value remains at the chosen Intensity setting and cannot be adjusted.

Note

The Intensity value is not the actual lumen output, but rather a correlated value only—1246 may represent 3500 lumens, for example.

To use “Intensity” mode, judge by eye (or use a meter) and set the level as desired for your application. Over time, the projector will automatically increase the power supplied to the lamp as needed to maintain the chosen intensity as closely as possible.

- **Power:** The power supplied to the lamp will remain at your specified wattage level. Once you select this option, enter the number of watts representing the power level you wish to maintain.

This slidebar and number indicates how many watts are applied to the lamp. You can apply anywhere from approximately 60-65% of the maximum power intended for the installed lamp up to 100% of the lamp rating. Set for the number of watts as desired, keeping in mind that lower power levels produce dimmer images. When in either Power or Max Brightness modes, the power level remains constant. Specifying a maximum power level here is the same as operating in Max Brightness mode.

HOW LONG CAN I MAINTAIN BRIGHTNESS? The VX-40d/-50d/-60d/-80d can maintain your “Intensity” setting until the required power reaches the maximum rating for the lamp. The lower the setting, the longer it will take to reach this threshold and the longer you can maintain the desired brightness. Keep in mind that once the lamp power reaches its maximum wattage (see “Power,” above), this tracking is no longer possible. At this point, the lamp will gradually begin to dim as usual, even though your original “Intensity” value will still appear in the menu. To resume accurate tracking, reduce the intensity setting so that the resulting “Power” value is less than its maximum—the lower the intensity, the longer it can be maintained.

For example, a 1000-Watt lamp can be driven at no more than 1000 Watts. To produce desired brightness at the screen, a new lamp would likely need less than this maximum rating — perhaps 812 Watts (example only). Over time, however, the lamp requires more and more current in order to generate the desired light, until eventually the lamp wattage reaches its 1000-Watt maximum and the lamp power automatically levels off. At this point, the tracking function terminates (that is, the power level stabilizes) and the lamp begins to dim normally. Either reduce your “Intensity” setting or replace the lamp.

Do not lower the “Intensity” so much that the corresponding “Power” value reaches its minimum — the intensity setting will be inaccurate and cannot be maintained.

Note

1. *Lamps become more stable over time, thus a specific intensity is more easily maintained as the lamp ages.*
2. *Intensity can be set only if the lamp is in “Intensity” mode*
3. *Intensity cannot exceed the output of Max Brightness mode.*

Optical Aperture: The optical aperture inside the projector controls the diameter of the light beam passing through the system. With a fully open aperture (slidebar default of “0”), the maximum amount of light passes through for maximum brightness in your images. Increase the slidebar setting to reduce the aperture diameter and maximize contrast ratio instead.

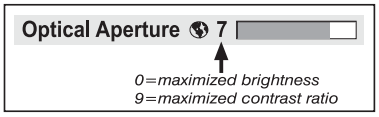

Lamp History (read-only): Lamp History shows the lamps most recently installed and recorded in the projector. The Lamp History automatically updates whenever you record a new lamp serial number; the new lamp is added to the end of the list.

Change Lamp: Select **Change Lamp** from the Lamp menu to record the serial number for a newly-installed lamp. For detailed lamp replacement instructions, refer to ***Lamp and Filter Replacement*** on page 73.

Notes:

4. Operation

4.1 Using the On-Screen Menus

Press the **MENU** button on either the remote control or the DHD Controller front panel to display the Main Menu.

To select a menu item, use the ▲ and ▼ buttons on either the remote control or the DHD Controller front panel to highlight it. Press **ENTER** to confirm your selection.

The VX-40d/-50d/-60d/-80d OSD menus are arranged hierarchically, as shown in Figure 4-1. Depending on the selected input source and signal characteristics, some menu options may not be available.

Input Source	Composite
	S-Video 1
	S-Video 2
	Component SD
	HD/RGB 1
	HD/RGB 2
	DVI 1
	DVI 2
	HD Pass Thru 1
	HD Pass Thru 2
Aspect Ratio	Anamorphic
	Standard 4:3
	Letterbox
	VirtualWide
	Cinema
	Virtualwide 2.35
Picture	Brightness
	Contrast
	Color
	Tint
	Sharpness
Input Position	Left/Right
	Up/Down
	Width
	Height
	Overscan
ISF Presets	Recall ISF Night
	Recall ISF Day
	Recall/Save Custom 1
	Recall/Save Custom 2
	Reset Custom 1 & 2 to Factory Default
Information (read-only)	Serial Number
	Hardware
	Firmware
	Date

Note: Virtualwide 2.35 is available only on VX-40d/-50d/-60d/-80d projectors equipped with the CineWide option (secondary anamorphic lens).

Calibration	ISF Night - Display Color	Lamp Power
	ISF Night - Input Image	Brightness
		Contrast
		Color
		Tint
		Sharpness
	ISF Night - Input Color	Gain
		Offset
		Chroma Delay
		Phase
		Noise Filter
	ISF Day - Display Color	Lamp Power
	ISF Day - Input Image	Brightness
		Contrast
		Color
		Tint
		Sharpness
	ISF Day - Input Color	Gain
		Offset
		Chroma Delay
		Phase
		Noise Filter
	Save ISF Settings	Back / Confirm
	Output Shift	Left/Right
		Up/Down
		Width
		Height
		Save
	Splash Configure	Owner Name
		ISF Calibrated
		ISF Other
	OSD Position	

Service	Test Video	Grey Bars 1	
		Grey Bars 2	
		Color Bars 1	
		Color Bars 2	
	Input Names	Rename, Restore or Save	
	Remote Control	Primary	
		Secondary	
	Analog Out Mode	RGB--, RGB++ or RGBS	
	Display Device - Input Source	RGB or DVI/HDMI	
	Display Device - Configure	Installation	Picture Orientation
			Keystone
			Lamp Hours (read-only)
		Lens	Focus
			Zoom
			Shift
		Auto Setup	
	HD Format	HD/RGB 1	Auto, RGB or YUV
		HD/RGB 2	
		ADC Bandwidth	Auto, 75 MHz, 150 MHz or 300 MHz
		YPbPr Input Resolution	Auto, 480i/p, 576i/p, 720p or 1080i
	Triggers	1 / 2 / 3 / Save	
	Miscellaneous	Language	(currently, English only)
		Menu Mode	
		Timeout	
		Side Bar Color	
		Film Mode (SD sources only)	
	Resolution	800x600 ... 1400x1050 480i ... 720p ... 1080i	
	System Reset		
	Restore Saved Settings		

Figure 4-1. DHD Controller OSD Menu Structure for VX-40d/-50d/-60d/-80d

The Main Menu is the starting point for accessing all projector functions.

(The Calibration and Service menus are hidden and not accessible until you enter a passcode.)

◄ *Main Menu*

Runco Video
Input Source
Aspect Ratio
Picture
Input Position
ISF Presets
Information
Calibration
Service

From the Main Menu, select Input Source to choose a video signal source.

The active source is indicated by an arrow (>) to its left; in the example at left, Composite is the active source.

◄ *Input Source*

	Input Source
>	**Composite**
	S-Video 1
	S-Video 2
	Component SD
	HD/RGB 1
	HD/RGB 2
	DVI 1
	DVI 2
	HD Pass Thru 1
	HD Pass Thru 2

Note

1. *HD Pass Thru 1 and HD Pass Thru 2 are available only when the Display Device Input Source is set to **RGB**; refer to **Display Device** on page 70.*
2. *Selecting HD Pass Thru 1 or HD Pass Thru 2 loops the HD/RGB 1 or HD/RGB 2 input signal respectively to the RGB output. This prevents display of the on-screen menus. To switch from HD Pass Thru 1 or 2 to another source, use the direct access buttons on the remote control, or the left- or right-arrow buttons on the DHD Controller.*
3. *If the DVI 1 or DVI 2 input is active and the input signal is HDCP-encrypted, the RGBHV output of the DHD Controller is disabled.*

To change the aspect ratio (size and shape) of the projected image, select Aspect Ratio from the Main Menu and press **ENTER**. Select the appropriate aspect ratio for your screen size and the type of program material being viewed; refer to Table 4-1.

The currently-selected aspect ratio is indicated by a "☒" to its left; in the example at right, Anamorphic is selected.

◄ *Aspect Ratio*

	Aspect Ratio
☒	**Anamorphic**
☐	**Standard 4:3**
☐	**Letterbox**
☐	**VirtualWide**
☐	**Cinema**
☐	**Virtualwide 2.35**

Note

The aspect ratio selection is automatically saved for each input and resolution.

Table 4-1. Aspect Ratio Settings

Aspect Ratio	Remote Control Key	Description	
Anamorphic	ANA	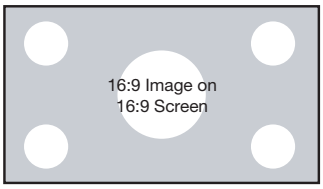 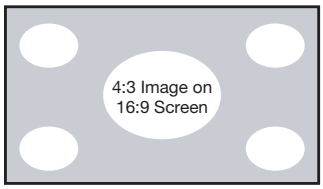	Select Anamorphic to view 16:9 DVDs and HDTV programs in their native aspect ratio. 4:3 images are stretched horizontally to fit a 16:9 screen.
Standard 4:3	4X3	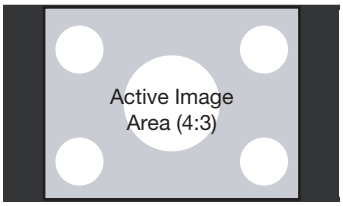	Standard 4:3 scales the input signal to fit in the center of the 16:9 screen. 4:3 is the aspect ratio used by computer monitors, standard television programming and most VHS video cassettes.
Letterbox	LET BOX	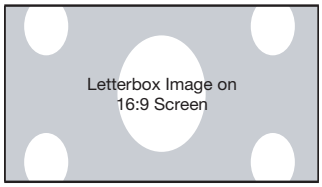	In Letterbox mode, the image is stretched vertically; the top and bottom portions are “blanked off.” Letterbox is best suited for viewing LaserDisc movies or non-anamorphic DVDs on a 4:3 screen.
VirtualWide	V-WIDE	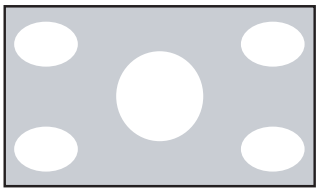	A 4:3 image is scaled NON-linearly (more on the sides than in the center) to fit a 16x9 screen.
Cinema	CINEMA	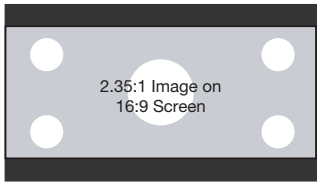	Select Cinema to view 2.35 source material on a 16:9 screen. The upper and lower portions of the screen are masked, but the geometry of the active image area is not changed.

Table 4-1. Aspect Ratio Settings (continued)

Aspect Ratio	Remote Control Key	Description	
Virtualwide 2.35	SVC	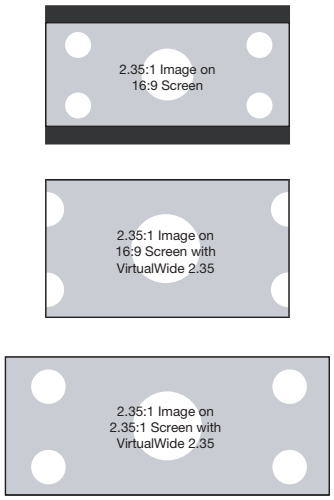	A 2.35 image is stretched anamorphically in both directions to fill a 16:9 image. (The secondary anamorphic lens then “stretches” the image back to 2.35:1.) Virtualwide 2.35 is available only on VX-40d/-50d/-60d/-80d projectors equipped with the CineWide option.

Use the controls in the Picture Menu to calibrate your VX-40d/-50d/-60d/-80d for optimum picture quality.

➤ ***Picture***

Picture
Brightness
Contrast
Color
Tint
Sharpness

The VX-40d/-50d/-60d/-80d has been designed to incorporate setup and calibration standards established by the Imaging Science Foundation (ISF). The ISF has developed carefully crafted, industry-recognized standards for optimal video performance and has implemented a training program for technicians and installers to use these standards to obtain optimal picture quality from Runco video display devices. Accordingly, Runco recommends that setup and calibration be performed by an ISF certified installation technician.

All signal types require separate processing. Therefore, you need to calibrate each DHD Controller input separately. Runco recommends calibrating the inputs in this order:

1. Component SD
2. S-Video 1 / S-Video 2
3. Composite
4. HD/RGB 1 / HD/RGB 2
5. DVI 1 / DVI 2

Note

When you change a picture quality setting, save the change to a preset afterwards. Otherwise, the change will be lost when a different input is selected. (Picture quality settings are saved for each input separately.) For information about saving settings, refer to ***ISF Presets*** *on page 66.*

Although it may be possible to obtain satisfactory picture quality using the naked eye and regular program material, Runco recommends using the following calibration tools for best results:

- External test pattern source – Ovation Multimedia, Digital Video Essentials or AVIA test DVD or equivalent.
- A blue filter (provided with many test DVDs), for color level and tint adjustments.

Connect your test pattern source to the input that you are calibrating and proceed as follows. **Perform the adjustments in the order listed here.**

Brightness: On your external test pattern source, select a PLUGE pattern. (PLUGE is an acronym for “Picture Line-Up Generation Equipment.”) Figure 4-2 shows a typical PLUGE pattern.

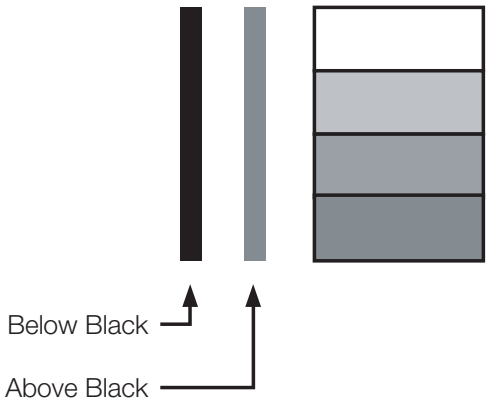

Figure 4-2. Typical PLUGE Pattern for Adjusting Brightness

PLUGE patterns vary but generally consist of some combination of black, white and gray areas against a black background. The example above includes two vertical bars and four shaded boxes.

Select Brightness from the Picture menu and press **ENTER**. Adjust the brightness so that:

- The darkest black bars disappear into the background.
- The dark gray areas are barely visible.
- The lighter gray areas are clearly visible.
- The white areas are a comfortable level of true white.
- The image contains only black, gray and white (no color).

Contrast: On your external test pattern source, select a stepped, gray-bar pattern like the one shown in Figure 4-3.

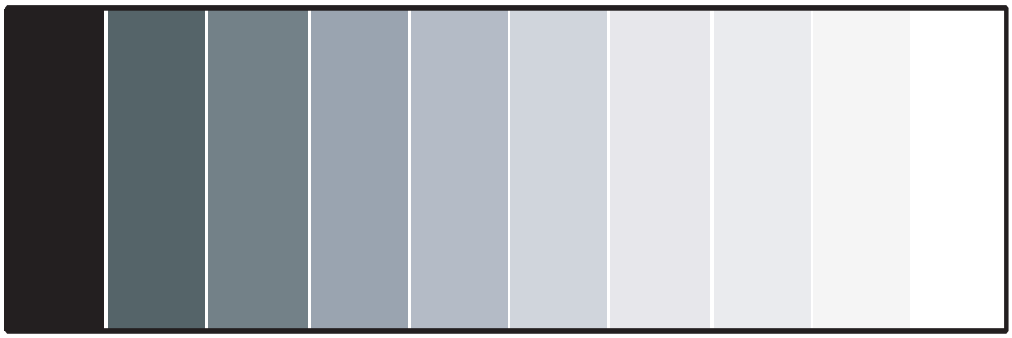

Figure 4-3. Typical Gray Bar Pattern for Adjusting Contrast

Select Contrast and press **ENTER**. Adjust the contrast to a point just below which the white rectangle starts to increase in size.

Note *Brightness and contrast controls are interactive. A change to one may require a subtle change to the other in order to achieve the optimum setting.*

Color Saturation: On your external test pattern source, select a color bar pattern like the one shown in Figure 4-4.

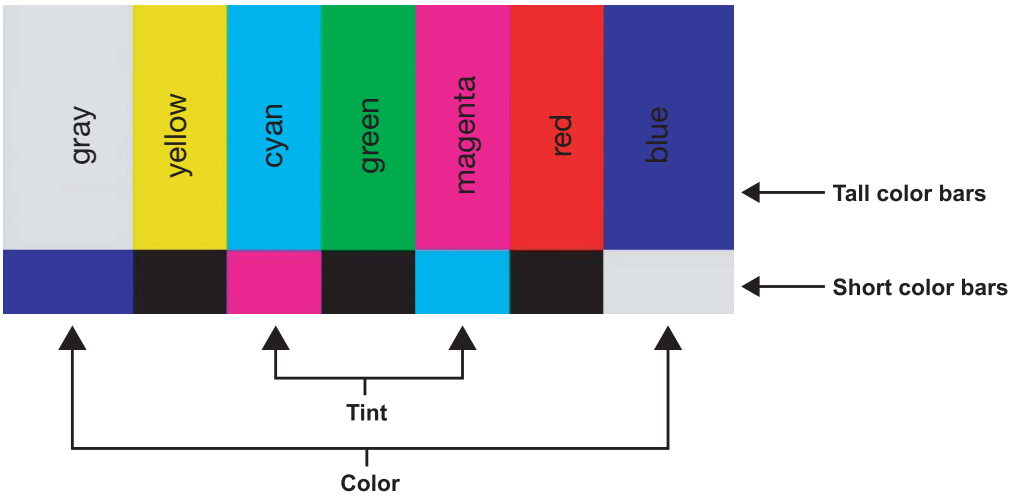

Figure 4-4. Typical Color Bar Pattern for Adjusting Color Saturation and Tint

Select Color and press **ENTER**. While looking at the color bar pattern through a blue filter, adjust the color saturation level until the outermost (gray and blue) color bars appear to be a single shade of blue:

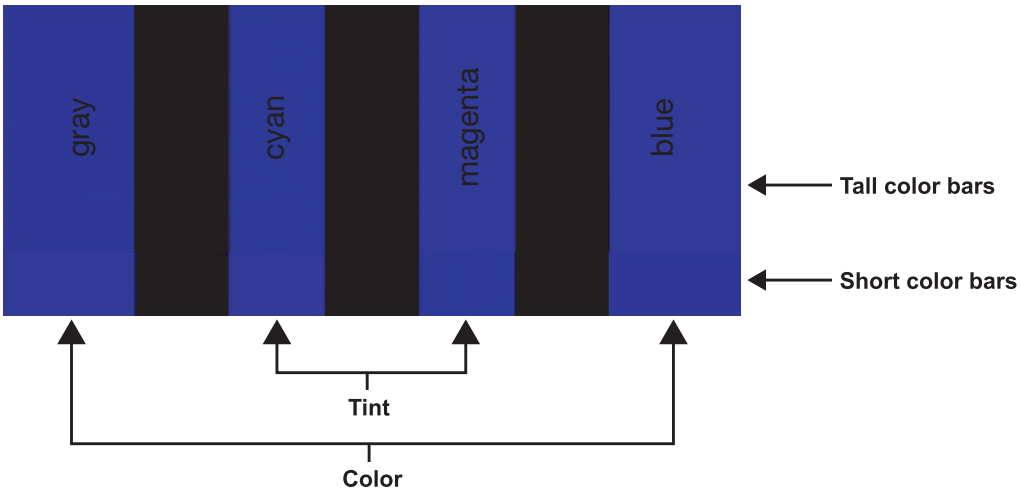

Tint: Tint or “hue” is essentially the ratio of red to green in the color portion of the image. When tint is decreased, the image appears redder; when it is increased the image appears greener. To set the tint, select Tint and press **ENTER**. While looking at the color bar pattern through a blue filter, adjust the tint level until the cyan and magenta color bars (on either side of the green bar) appear to be a single shade of blue.

Note

Like the brightness and contrast controls, the color and tint controls are interactive. A change to one may require a subtle change to the other in order to achieve the optimum setting.

Sharpness: “Sharpness” is the amount of high-frequency detail in the image. To adjust sharpness, select Sharpness from the Picture menu and press **ENTER**. On your external test pattern source, select a pattern like the one shown in Figure 4-5. Adjust as needed, looking for white edges around the transitions from black to gray and differently-sized lines in the “sweep” patterns at the top and bottom. Lower the sharpness setting to eliminate them.

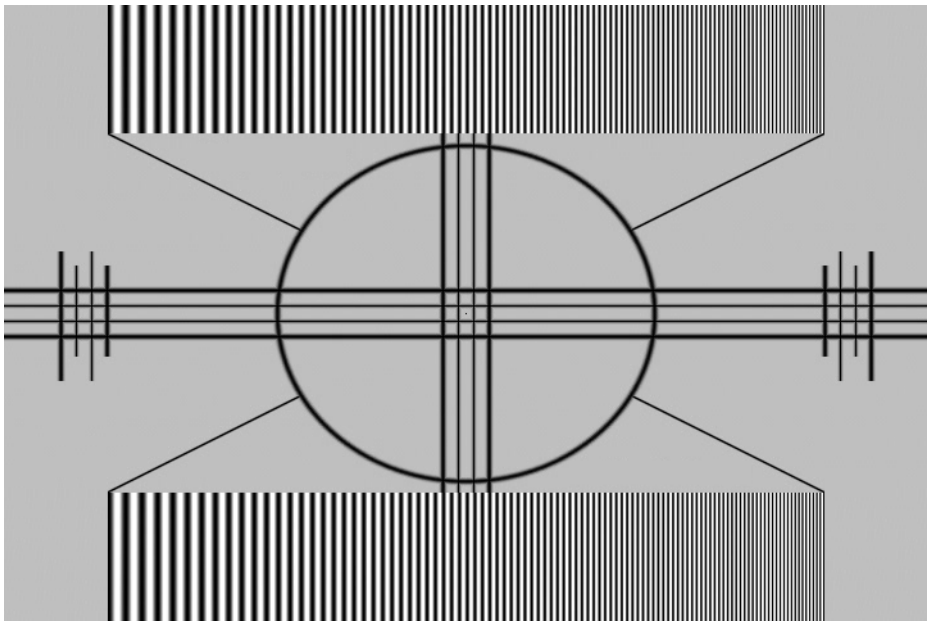

Figure 4-5. Typical Test Pattern for Adjusting Sharpness

Use the controls in the Input Position Menu to fine-tune the aspect ratio and image position for the current source.

Input Position

Input Position
Left/Right
Up/Down
Width
Height
Overscan

Note *The input position settings are automatically saved for each input and resolution.*

Left/Right: Select Left/Right from the Input Position menu to shift the projected image horizontally. Use the right or up cursor button to shift the image to the right; use the left or down button to shift it to the left.

Up/Down: Select Up/Down from the Input Position menu to shift the projected image vertically. Use the right or up cursor button to shift the image upward; use the left or down button to shift it downward.

Width: Select Width from the Input Position menu to change the projected image width. Use the right or up cursor button to increase the width; use the left or down button to decrease it.

Height: Select Height from the Input Position menu to change the projected image height. Use the right or up cursor button to increase the height; use the left or down button to decrease it.

Overscan: Image Overscan pushes the outside edge of the active picture area of the video signal out beyond the edge of the display area.

Some television programs are produced based on the assumption that older television sets may not display the outer edges of the broadcast picture area. Over scan effectively trims away these inactive, outer edges and enlarges the remaining portion of the image to fill the display area.

Select from 1% to 10% of Overscan, as desired.

For HDTV, DVDs and other video sources, Overscan is generally not necessary or desirable.

ISF Presets ➤

ISF Presets		
☒	ISF Night	
☐	ISF Day	
☐	Custom 1	Save
☐	Custom 2	Save
Factory Default		

For each input, the VX-40d/-50d/-60d/-80d lets you save image quality settings as presets that you can recall at a later time. You can create up to four presets per input and resolution. Use the ISF Presets menu to recall saved image presets, or to save image settings in the “Custom 1” or “Custom 2” memory location. The currently-selected preset is indicated by a “☒” to its left; in the example shown here, ISF Night is selected.

You should save changes to any of the following settings to a preset; otherwise they will be lost when a new input source or resolution is selected:

- Brightness
- Contrast
- Color saturation
- Tint
- Sharpness

To reset the Custom 1 and Custom 2 image presets to their factory defaults, select Factory Default and press **ENTER**.

Information ➤

Information	
Serial Number	
Hardware	0
Firmware	0002.003A
Date	Mar 15 2006

Select Information from the Main Menu to see information that uniquely identifies your DHD Controller: its serial number, the installed hardware and firmware versions and the firmware version build date. Should you ever need to contact Runco Technical Support, this information will help them answer your questions or resolve product performance issues.

Use the Calibration menu to perform advanced picture quality adjustments. **This menu should be used by ISF-certified technicians only.**

◄ ***Calibration***

Calibration
ISF Night
Display Color
Input Image
Input Color
ISF Day
Display Color
Input Image
Input Color
Save ISF Settings
Output Shift
Splash Configure
OSD Position

Note *You must enter a passcode to access the Calibration menu.*

To recall the ISF Night or ISF Day settings, select “ISF Night” or “ISF Day” from the ISF Presets menu (see above).

ISF Night - Display Color: Use the Display Color settings to adjust the projector lamp intensity. These settings are saved independently for each input.

- **Lamp Power:** Select Lamp Power from the Display Color Menu to adjust the lamp output level. You can choose to run the lamp as bright as possible (“100”), at its lowest power level (“0,” which equates to approximately 700 watts; this is the default setting) or choose a setting in between. Generally, lower lamp output prolongs the life of the lamp, but decreases brightness.

ISF Night - Input Image: The Input Image controls are similar to those in the Picture menu, but are accessible only by entering the Calibration menu passcode. This makes it possible to restore the picture quality settings to what they were when the projector was installed, simply by recalling the “ISF Night” preset.

ISF Night - Input Color: Use the Input Color controls to adjust the color balance of the incoming signal. These settings are also saved independently for each input.

- **Gain:** Use the Gain controls to correct color imbalances in the bright areas of the image. A good way to do this is to use a test pattern consisting mostly of solid white areas, such as an 80 IRE “window” pattern. If the white areas contain traces of red, green or blue, decrease the Gain for that color.
- **Offset:** Use the Offset controls in the White Balance sub-menu to correct color imbalances in the dark areas of the image. A good way to do this is to use a test pattern consisting mostly of dark gray areas, such as a 30 IRE “window” pattern. If the gray areas contain traces of red, green or blue, decrease the Offset for that color.
- **Chroma Delay:** Use the Chroma Delay control to correct a mis-aligned image from a Composite, S-Video or Component video source. Chroma delay in an image causes color shifts to occur to the left of the vertical edge transitions, producing artificial shadows or a “halo” effect. If necessary, adjust this setting to eliminate them.
- **Phase:** Adjust the phase if the image (usually from an RGB source) shows shimmer or “noise.” Pixel phase adjusts the phase of the pixel sampling clock relative to the incoming signal. The effect of this control is similar to that of a tracking control on a VCR.

  For best results, use a good test pattern such as a smooth gray consisting of a clear pattern of black and white pixels, or a similar “half on, half off” graphic image. (You may notice that you can stabilize the image at more than one point. Use either setting in this case.)
- **Noise Filter:** To apply noise filtering to the input signal, select Noise Filter from the Input Color menu. The Noise Filter is useful for clearing up noisy images from 480i video sources.

  Use the left- or right-arrow buttons to select the desired amount of noise reduction, keeping in mind that higher settings (which reduce high frequencies) may also “soften” the image.

ISF Day - Display Color: Refer to ***ISF Night - Display Color***.

ISF Day - Input Image: Refer to ***ISF Night - Input Image***.

ISF Day - Input Color: Refer to ***ISF Night - Input Color***.

Save ISF Settings: Whenever you make a change to the ISF settings, you should always save it. Select Save ISF Settings from the ISF Calibration menu to do this. In the event you ever have to perform a System Reset, you can restore the saved ISF settings by selecting Restore Saved Settings in the Service menu. (System Reset and Restore Saved Settings are described on page 72.)

Output Shift: The controls in the Output Shift menu are similar to those in the Input Position menu, except that they change the characteristics of the output signal. These settings are saved independently **for each aspect ratio**.

To save the Output Shift settings for the current aspect ratio so that they can be restored after a System Reset (described on page 72), press ▼ repeatedly to highlight “Save.” Then, press **ENTER**.

Splash Configure: Use the Splash Configure menu to customize the appearance of the start-up message that appears on the vacuum fluorescent display upon power-up. You can have the VX-40d/-50d/-60d/-80d display the owner’s name, your name, the phrase “ISF Calibrated” and/or any other string, up to 20 characters in length.

Use the up or down cursor button to select a character. Use the right and left cursor buttons to change the cursor position. Press **MENU** when you have finished entering text. Then, check the “Splash Enable” box to have the VX-40d/-50d/-60d/-80d display the information you enter here when it is turned on.

OSD Position: Select OSD Position, press **ENTER** and use the arrow buttons to change the size and position of the OSD controls.

Use the Service menu to access advanced projector configuration settings. **This menu should be used by ISF-certified technicians only.**

◄ ***Service***

Service
Test Video
Input Names
Remote Control
Analog Out Mode
Display Device
HD Format
Triggers
Miscellaneous
Resolution
System Reset
Restore Saved Settings

Note *You must enter a passcode to access the Service menu.*

Test Video: Select Test Video from the Service Menu to access the internal test patterns on the VX-40d/-50d/-60d/-80d. Four patterns are available, consisting of white/gray or colored bars.

Press **MENU** to exit test pattern mode.

Input Names: You can give each DHD Controller input a descriptive name. For example, you may want to change the default input name to the type of source component connected to it: “VCR,” “DVD,” “Laptop” et cetera. Composite, S-Video and Component SD input names can be up to 12 characters long; the others can be up to eight characters long.

Input Names	
	Restore
Composite	**Composite**
S-Video 1	**S-Video 1**
S-Video 2	**S-Video 2**
Component SD	**Component SD**
HD/RGB 1	**HD/RGB 1**
HD/RGB 2	**HD/RGB 2**
DVI 1	**DVI 1**
DVI 2	**DVI 2**
Save	

To edit an input name, select Input Names from the Service menu. Press ▲ or ▼ to select an input and press **ENTER**. Use the ▲ or ▼ buttons to change a character; press ◄ or ► to select a character to change. When you have finished editing the input name, press **MENU**.

To restore the default input name, press ▼ repeatedly to highlight that input name in the “Restore” column. Then, press **ENTER**.

To save input names so that they can be restored after a System Reset (described on page 72), press ▼ repeatedly to highlight “Save.” Then, press **ENTER**.

Note *The ▼ button takes you from top to bottom in the left column, then from top to bottom in the right column. To highlight “Save,” scroll through both columns.*

Remote Control: The Remote Control menu shows you the primary and secondary infrared (IR) codes to which the DHD Controller will respond. By default, both are set to 17. You can change these codes if either:

- Another device in the theater (a DVD player, for example) is responding to commands from the DHD Controller remote control (Figure 2-6) in ways that are unpredictable or undesirable.
- You have multiple DHD Controllers and want to control them independently, as opposed to broadcasting commands from a single remote to all of them. In this scenario, you can use multiple remotes programmed to use different IR codes. Or, you can use a single remote and change the IR code as needed to address a specific device.

Tip *Use the DHD Controller front-panel keypad to change its IR code. Then, change the code sent by the remote to match as described below.*

Note *Do not change the "Type" setting in this menu.*

When you change a remote code on the DHD Controller, you must re-program your remote control to send that same code. To do this:

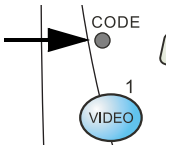

1. Using a straightened paper clip or similar object, press and hold the **CODE** button on the remote control for approximately three seconds, or until the red LED on the remote lights solid red.
2. Enter a new two-digit code between 00 and 31 inclusive. Include a leading zero for single-digit codes; for example, enter 9 as "09."
3. The LED turns off to confirm the code change. If you enter an invalid code, the LED flashes for three or four seconds. Try again, entering a valid code.

Analog Out Mode: Select Analog Out Mode from the Service menu to change the characteristics of the analog output signal from the DHD Controller. The choices are RGB-- (separate sync with negative polarity), RGB++ (separate sync with positive polarity) or RGBS (composite sync).

Display Device: The options in the Display Device menu allow you to perform various adjustments at the projector.

- **Input Source:** Select **Input Source** from the Display Device menu to switch from one DHD Controller output/projector input to the other. Use the ▲ or ▼ button to select **RGB** or **DVI/HDMI**, then press **ENTER**.

Note *If the DVI 1 or DVI 2 DHD Controller input is active and the input signal is HDCP-encrypted, the RGBHV output of the DHD Controller is disabled.*

Tip *Use the serial command* `DISPLAY [n]` *(where [n] = 2, 3, 4 or 5) to set the Input Source to RGB or DVI/HDMI, so that the DHD Controller retains this setting after a System Reset. (This is not the case when you change the Input Source in the Display Device menu.) For more information, refer to* ***Miscellaneous Commands*** *on page 87.*

- **Configure:** Select Configure from the Display Device menu to change the picture orientation, correct a “keystoned” (trapezoidal) image, access the lamp timer, perform lens adjustments and quickly optimize various display settings.
  - **Installation - Orientation:** Refer to ***Adjusting the Picture Orientation*** on page 37.
  - **Installation - Keystone:** If the projector and screen are not installed perpendicular to each other, the image may become distorted in a trapezoidal shape, as shown in Figure 4-6. Select Keystone from the Configure menu to compensate for this.

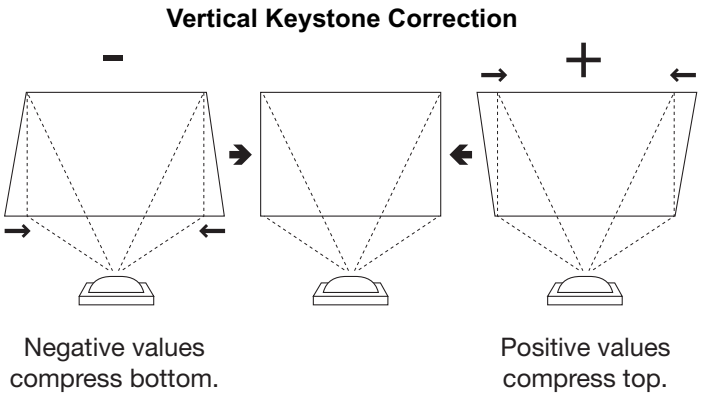

Figure 4-6. Keystone Correction

  - **Installation - Lamp Hours:** This menu page also displays the number of hours that the lamp has been in service. To reset the counter (which is recommended after you replace the lamp), refer to ***Lamp and Filter Replacement*** on page 73.
  - **Lens:** Select Lens from the Display Device menu to access the motorized lens controls. Refer to ***Primary Lens Adjustments*** on page 37.
  - **Auto Setup:** Refer to ***Auto Setup*** on page 47.

HD Format: If the characteristics of the incoming signal on the HD1 or HD2 inputs are known, select HD Format from the Service menu and set them as described below. Doing so can reduce the time it takes the DHD Controller to switch from HD to 480i signals or vice versa.

HD Format	
HD/RGB 1	Auto
HD/RGB 2	Auto
ADC Bandwidth	Auto
YPbPr Input Resolution	

This is generally not necessary unless the DHD Controller – for whatever reason – has difficulty determining the color space (RGB or YUV), bandwidth or resolution of the incoming HD signal. In most situations, the **Auto** settings work well.

- **HD/RGB 1 and HD/RGB 2 (Color Space):** Select Auto, RGB or YUV.
- **ADC Bandwidth:** Select Auto, 75 MHz, 150 MHz or 300 MHz.
- **YPbPr Input Resolution:** Select Auto or specify the input resolution, if known: 480i, 480p, 576i, 576p, 720p or 1080i.

Triggers: Select Triggers from the Service menu to configure the 12-volt trigger outputs. You can assign one or more trigger outputs to each aspect ratio. Those triggers are then activated by selecting that aspect ratio.

If your projector is equipped with the Runco CineWide with AutoScope system, assign at least one trigger output (the same one to which the lens motor is connected) to the Cinema and Virtualwide 2.35 aspect ratios.

Tip *To configure a trigger to activate when the system is turned on – for example, when using the trigger to control a retractable screen – assign that trigger to all aspect ratios.*

To save the trigger settings so that they can be restored after a System Reset (described below), press ▼ repeatedly to highlight “Save.” Then, press **ENTER**.

Miscellaneous: Select Miscellaneous from the Service menu to set the following options:

- **Language:** Select Language from the Miscellaneous menu and press the up- or down-arrows to select the OSD language. (Currently, only English is supported.)
- **Menu Mode:** This is the manner in which the OSD menus appear and disappear when you press MENU. Choose one of the following:

  0 = No transition; menus abruptly appear and disappear.
  1 = Menus fade in and out.
  2 = “Checkerboard” dissolve; menus appear and disappear in sections.
  3 = “Window shade” effect; menus are drawn on a diagonal from top left to bottom right, and retract in the opposite direction.
- **Timeout - Short/Long:** These settings control how long the OSD menus stay on screen. Select a time-out period of from 2 to 60 seconds.
- **Side Bar Color:** This controls the color of the inactive image area. The range is from -100 (black) to 100 (white).

  The inactive image area is on either side of the active image area when using the Standard 4:3 aspect ratio, and above and below the active image area when using the Letterbox aspect ratio.
- **Film Mode:** Enable Film Mode to smooth out moving images from interlaced, standard-definition (SD) sources. In most cases, the DHD Controller detects the proper “pull-down” rate and vertical frequency. However, if your source is jittery and/or tearing you may wish to enable Film Mode to ensure stable processing for that source.

Resolution: The DHD Controller defaults to an output resolution of 720p. When using the VX-40d/-50d/-60d/-80d with a computer or certain HD sources, you may want to force the DHD Controller to use a different output resolution. If so, select Resolution from the Service menu and choose one. Then, press **ENTER** to confirm.

System Reset: To reset ALL projector and controller settings (including image settings) back to their factory defaults, choose System Reset from the Service menu.

A confirmation message appears, reminding you to save your settings before you perform the reset, so that you can restore them afterwards. If you have done this, select Confirm to continue with the reset. Otherwise, click Back to cancel.

Caution ***This action is not undoable. Proceed with caution!*** *Before you perform a System Reset, save ALL settings, including “Custom” ISF Presets (page 66), ISF Day/Night presets (page 68), Output Shift settings (page 68), Input Names (page 69) and Trigger settings (page 71).*

Restore Saved Settings: Following a System Reset, select Restore Saved Settings to apply all previously-saved settings to the projector and DHD Controller.

5. Maintenance and Troubleshooting

5.1 Lamp and Filter Replacement

The VX-40d/-50d/-60d/-80d uses a Cermax® Xenon lamp to deliver its high brightness. The lamp should be replaced when it reaches the end of its life (typically 1000 hours), or sooner if a noticeable degradation in brightness occurs. When you replace a lamp, you should replace the filters as well.

Keep track of the number of hours the lamp has been in use and be aware of any changes to brightness. These indicators will help you effectively maintain operation of the projector. To find out how long the currently-installed lamp has been in service, select Lamp Hours from the DHD Controller Installation menu (available by selecting **Service -> Display Device -> Configure -> Installation**, in sequence).

For lamp or filter replacement, please contact your nearest Runco authorized service center or Runco dealer. Do not attempt to replace the lamp yourself!

1. Turn off the projector and unplug the power cord. Allow the projector to cool down for approximately 45 minutes prior to removing the lamp assembly for replacement.
2. Loosen the four rear Lamp Cover screws (see Figure 5-1) and remove the cover.

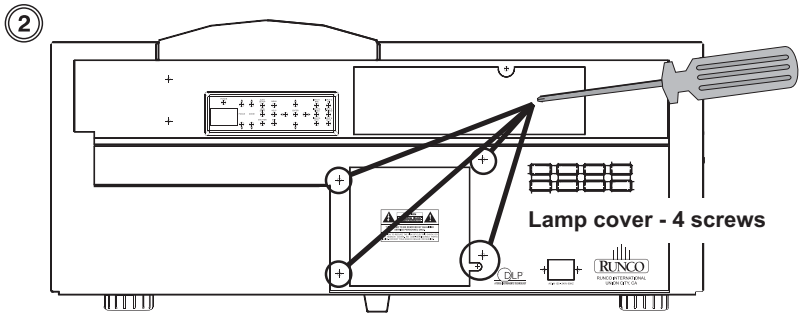

Figure 5-1. Removing the Lamp Door

3. Pull (out) and turn the lamp lock lever, which is located to the left of the lamp module, a quarter turn counterclockwise to the “unlock” position (Figure 5-2).

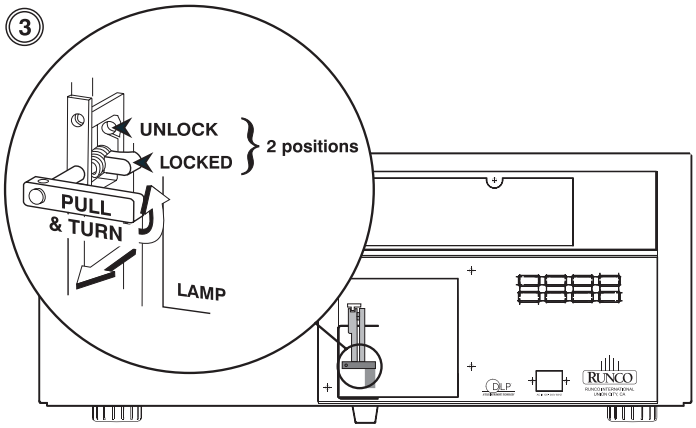

Figure 5-2. Unlocking the Lamp

4. Grasp the lamp by its housing only and pull it straight out (lamp slides along guides) until it's free; see Figure 5-3. Discard the lamp using safe disposal/recycling practices or contact your Runco dealer for a possible re-lamping program.

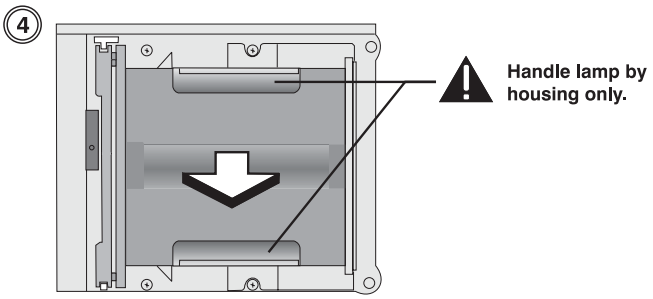

Figure 5-3. Removing the Lamp

5. Align the new lamp with the top and bottom guides on the left side of the lamp compartment; see Figure 5-4. Slide the lamp all the way in. A slightly harder push may be required right at the end to make sure it is fully seated into the terminal block. NOTE: The projector will not power up again if the lamp is not fully connected to the terminal block.

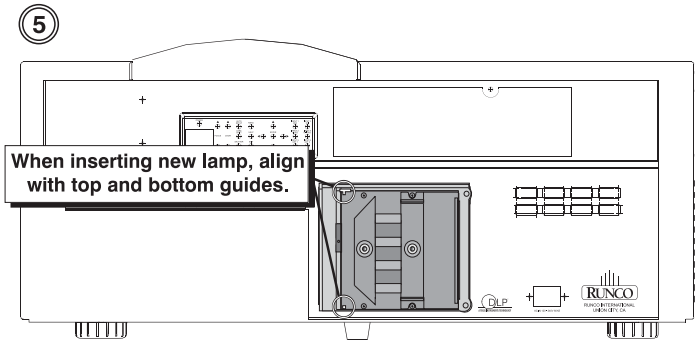

Figure 5-4. Installing A New Lamp

6. Pull (out) and turn the lamp lock lever (turned up in Step 3) a quarter turn clockwise to "lock" the lamp in place. NOTE: If you can't turn the lamp lock into position, the lamp may not be fully inserted. In this case, partially remove the lamp and try pushing it back in again. Then, try switching the lock lever to the "lock" position.
7. Replace the lamp door and tighten the four screws to secure it.
8. Re-attach the power cord to the projector and power it up.
9. Press **MENU** on the projector remote control (Figure 3-15) or rear-panel keypad (Figure 2-3).
10. Select **Lamp** from the Main Menu.
11. Select **Change Lamp** from the Lamp menu.
12. Enter the serial number in the **Lamp S/N** text box using the remote numeric keypad.

13. Press **ENTER** to accept the change. This adds the new lamp serial number to the Lamp History menu and resets the Lamp Hours timer to “0.” Lamp Mode and Lamp Limit remain as they were for the previous lamp and can be changed at any time.

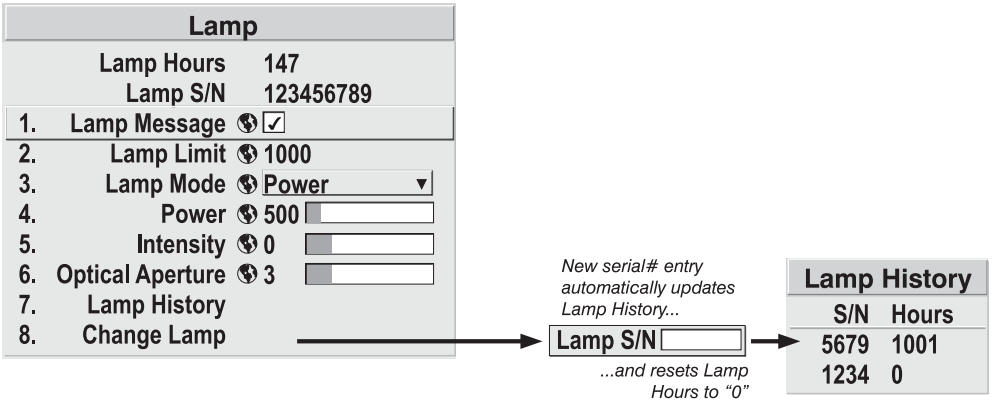

Figure 5-5. Recording the Serial Number of a New Lamp

Note

*Always record the serial number of a new lamp. Do this **only** if you have just installed a new lamp. This will ensure that the lamp timer is not reset on an old lamp and that the number of hours logged on the lamp is accurate.*

Whenever you replace the lamp – or more often if the projector is installed in an extremely dusty environment – you should also replace the two filters located at the front and right side of the projector.

➤ ***Filter Replacement***

1. Loosen the six screws holding right side filter access panel in place. Then, remove the panel.

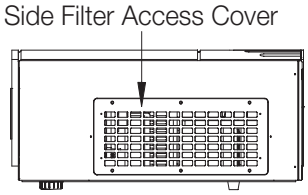

2. Loosen the two screws holding front filter access panel in place. Then, remove the panel.
3. Pull the filters out of the projector and discard. Do not reuse filters.
4. Insert the new filters with the wired side in.
5. Replace the filter access panels and tighten the screws to secure them.

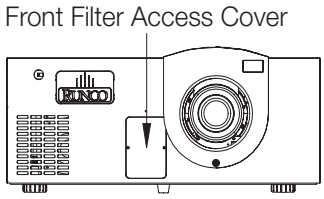

5.2 Lens Replacement

If you need to remove the lens – either to replace it or to prepare the projector for shipment – proceed as follows:

1. Power down the projector and wait five minutes to allow the lamp to cool.
2. Remove the secondary anamorphic lens, if present.
3. Place the lens cap on the installed lens to protect it from damage.
4. Press and hold the “lens release” button located in the top right corner of the lens panel.
5. Grasping the lens barrel, turn it in a counter-clockwise direction until it stops. Then, pull it forward to remove it (disconnects from the connector assembly).

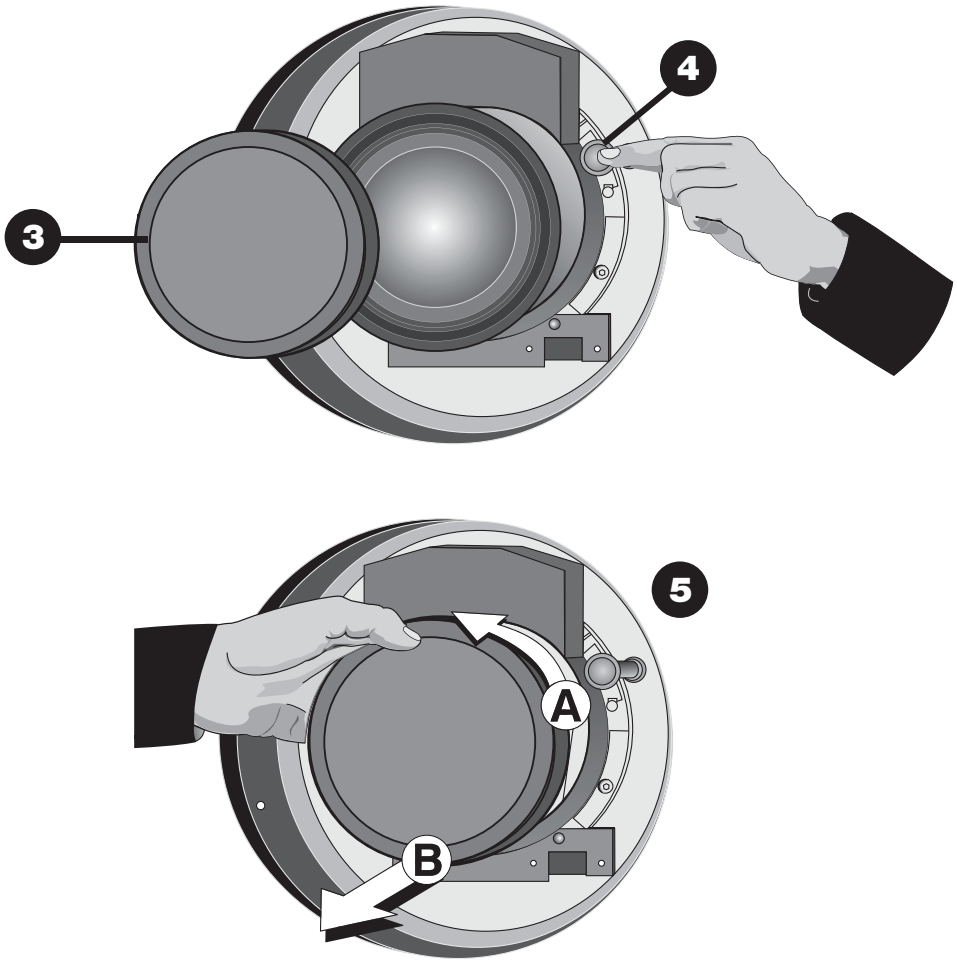

Note: The connector assembly moves as you turn the lens.

Figure 5-6. Removing the Primary Lens

5.3 Troubleshooting Tips

Table 5-1 provides some general guidelines for troubleshooting problems you may encounter with the VX-40d/-50d/-60d/-80d. If the suggested solutions fail to resolve the problem or if you encounter an issue not described here, please contact Runco Technical Support.

Table 5-1. Troubleshooting Chart

Symptom	Possible Cause(s)	Solution
The projector does not turn on after initial installation.	• The VX-40d/-50d/-60d/-80d is not plugged in or the AC outlet is not active. • The DHD Controller is not plugged in or the AC outlet is not active. • The remote control batteries have run out. • The serial connection from the DHD Controller to the VX-40d/-50d/-60d/-80d is incorrect.	• Ensure that the VX-40d/-50d/-60d/-80d is plugged in and that the AC outlet is active. • Ensure that the DHD Controller is plugged in and that the AC outlet is active. • Replace the batteries. • Ensure that the RS-232 output from the DHD Controller is properly connected to the RS-232C input on the VX-40d/-50d/-60d/-80d (see Figure 3-8).
The projector and DHD Controller are both on, but there is no picture and on-screen menus do not appear.	• Lens cover is on or shutter is closed. • Lamp failed to ignite. • Faulty or incorrect video connection between the DHD Controller and the VX-40d/-50d/-60d/-80d. • Incorrect input source selection. • Display Device input source is set to RGB, DHD Controller input is set to DVI 1 or DVI 2 and DVI source is HDCP-encrypted.	• Ensure that the lens cover is off and the shutter is open. • Ensure that the lamp door is closed. If it is and the problem persists, replace the lamp. • Ensure that the DVI and/or RGBHV outputs from the DHD Controller are properly connected to the video inputs on the VX-40d/-50d/-60d/-80d (see Figure 3-8). • Choose the correct input source on the projector (refer to ***Selecting the Input Source*** on page 36). • Set the Display Device input source to DVI/HDMI or use a different input on the DHD Controller for the encrypted source material.

Table 5-1. Troubleshooting Chart (continued)

Symptom	Possible Cause(s)	Solution
The display is on and menus appear, but there is no picture.	• Incorrect source selection. • Source component is not turned on. • Source component is connected incorrectly or not at all.	• Select the correct source. • Turn on the source component. • Check connections from source component to DHD Controller.
A projected image from a DVD is split or otherwise scrambled.	• DVD player is connected to the Component input and set to progressive scan mode.	• Turn off progressive scan on the DVD player. Or, connect the DVD player to the HD1 or HD2 input.
Image appears “squeezed” or vertically stretched into center of screen.	• Incorrect aspect ratio selection.	• Select a different aspect ratio.
The display is jittery or unstable.	• Poor-quality or improperly connected source. • The horizontal or vertical scan frequency of the input signal may be out of range for the projector.	• Ensure that the source is properly connected and of adequate quality for detection. • Correct at the source.
Image is too bright and/or lacks definition in the bright areas of the image.	• Contrast is set too high.	• Lower the contrast setting.
Image appears “washed out” and/or dark areas appear too bright.	• Brightness is set too high.	• Lower the brightness setting.
Colors in the image are swapped; for example, reds appear blue or vice versa.	• The Red/Pr, Green/Y or Blue/Pb outputs from the source are connected to the wrong inputs on the DHD Controller.	• Ensure that the source outputs are connected to the correct DHD Controller input.
The display freezes suddenly.	• Excessive voltage noise on the AC or ground input has interrupted the projector’s ability to lock on to a signal.	• Power down the projector and disconnect from AC. Then, plug in again and power up as usual.
The projector will not turn back on after it was powered down, or the image disappears during operation.	• The projector will not turn on for two minutes after power-down, to protect the lamp. • The lamp has failed.	• Wait until the LED at the front of the DHD Controller turns red. • Replace the lamp.

Table 5-1. Troubleshooting Chart (continued)

Symptom	Possible Cause(s)	Solution
AutoScope lens motor does not work.	• The motor is not plugged in or the AC outlet is not active. • The motor is not connected to a trigger output on the DHD Controller. • Incorrect trigger assignment.	• Ensure that the motor is plugged in and that the AC outlet is active. • Check the trigger connection between the lens motor and DHD Controller (Figure 3-13). • Correct the trigger assignment (refer to ***Configure Lens Motor Trigger (CineWide with AutoScope)*** on page 39).

➤ *Error Codes*

If the status code display on the back of the projector shows one of the following values, you have encountered a likely system error requiring the attention of a qualified service technician. Acknowledge and clear the error by pressing **EXIT** twice on the rear-panel keypad. Try resetting the projector by powering it off, allowing it to cool and powering it on again. Refer to Table 5-2 and contact your dealer if the problem persists.

The specific code number identifies the source of the error detected, and is particularly useful in cases where the projector is far away. For example, the code “27” means the lamp could not be turned on.

Table 5-2. VX-40d/-50d/-60d/-80d Error Codes

Code	Description
General	
12	Software bug. Contact dealer or Runco Technical Support.
13	CRC error in flash ROM. Download new software.
14	Engineering-only programming is complete. Contact Runco, replace TIPM.
15	Attempting to download code without being in boot mode.
16	Invalid interrupt. Power off/on. If it persists, contact dealer or Runco Technical Support.
17	User forced system to stay in boot mode.
18	Jumper for programming boot not installed.

Note: *To clear a system error, press the* ***EXIT*** *key (on the projector’s rear-panel keypad) twice. If necessary, reset the projector by powering it off, allowing it to cool and powering it on again. Contact your Runco dealer or Runco technical support if the error persists.*

Table 5-2. VX-40d/-50d/-60d/-80d Error Codes (continued)

Code	Description
Lamp Failures	
20	Lamp turned on unexpectedly (fault related to ballast).
21	Lamp airflow low, overheating imminent.
23	Cannot read valid ballast ID.
26	Lamp 1 Interlock: lamp door open, lamp not installed.
27	Can't turn lamp on.
28	Lamp turned off unexpectedly.
29	Lamp ballast overheated.
Power and Cooling	
46	Red DMD heat sink overheated.
47	Green DMD heat sink overheated.
48	Blue DMD heat sink overheated.
49	Prism overheated.
4C	Projector shutdown due to critical error.
C0	Lamp blower failure (lamp not turned on).
51	LVPS fan failed (Fan 1).
52	LVPS/Red cooling fan failed (Fan 2).
53	DC lamp fan failed (VX-40d or VX-60d; Fan 3).
54	Red DMD heatsink fan failed (Fan 4).
55	Green DMD heatsink fan failed (Fan 5).
56	Blue DMD heatsink fan failed (Fan 6).
57	TIPM fan failed (Fan 7).
58	TIPM fan failed (Fan 8).

Note: *To clear a system error, press the* ***EXIT*** *key (on the projector's rear-panel keypad) twice. If necessary, reset the projector by powering it off, allowing it to cool and powering it on again. Contact your Runco dealer or Runco technical support if the error persists.*

Table 5-2. VX-40d/-50d/-60d/-80d Error Codes (continued)

Code	Description
TIPM (Image Processor)	
60	Boot code CRC failed.
61	Unable to program DigMux PLD.
62	Unable to program Control PLD.
63	Unable to program Bubks PLD.
64	Unrecognized ROM type.
65	Write to flash ROM failed.
66	TIPM failure.
67	Downloaded code will not fit.
68	Scaler communication problem.
Built-In Keypad	
70	Unable to access EEPROM on the built-in keypad.
71	EEPROM memory re-initialization on the built-in keypad.
Panel Driver and Formatter	
80	Unrecognized Panel Driver.
81	Unable to program device on Panel Driver.
82	TI flash download failure.
83	TI flash download failure.
84	TI flash download failure.
85	TI-I2C write failure.
86	One or more formatters not responding; probable formatter software fault.
87	Formatter reports RDRAM failure.
88	Red modular Formatter communication failure.
89	Green modular Formatter communication failure.
8A	Blue modular Formatter communication failure.
93	Modular formatter architecture error.
94	Modular formatter DMD mismatch.
95	Modular formatter sequence mismatch.

Note: *To clear a system error, press the* ***EXIT*** *key (on the projector's rear-panel keypad) twice. If necessary, reset the projector by powering it off, allowing it to cool and powering it on again. Contact your Runco dealer or Runco technical support if the error persists.*

Table 5-2. VX-40d/-50d/-60d/-80d Error Codes (continued)

Code	Description
Miscellaneous	
A0	Unable to program the optional module.
A1	Unable to power the optional module.
A2	Unable to program the Dual Slot Backplane Module (DSBP).
A3	Unable to program the optional Post Processing Module (Warp module).

Note: *To clear a system error, press the* ***EXIT*** *key (on the projector's rear-panel keypad) twice. If necessary, reset the projector by powering it off, allowing it to cool and powering it on again. Contact your Runco dealer or Runco technical support if the error persists.*

6. Serial Communications

6.1 RS-232 Connection and Port Configuration

To interface the DHD Controller with a home theater automation/control system or a PC running terminal emulation software, connect it to your control system or PC as shown in Figure 3-13.

Configure the RS-232 controller or PC serial port as follows: no parity, 8 data bits, 1 stop bit and no flow control. Set the baud rate to 19200, to match that of the DHD Controller RS-232 port.

6.2 Serial Command Syntax

Serial commands to the DHD Controller take the following form:

- Commands are not case-sensitive.
- For a single command that takes no parameters, type the command followed by a carriage return; for example, to set the aspect ratio to Letterbox, type `LETTERBOX <Enter>`.
- For a single command that takes a parameter, type the command, a space or a comma and the desired value followed by a carriage return; for example, to set the brightness to -10, type `BRIGHTNESS -10 <Enter>` or `BRIGHTNESS,-10 <Enter>`.
- You can also send a string of multiple commands on a single line, separated by commas. For example, `COMPOSITE,BRIGHTNESS 100,ANAMORPHIC <Enter>` switches to the Composite video input, sets the brightness to 100 and sets the aspect ratio to Anamorphic. Command strings can be up to 255 characters long.

Note *Avoid combining the* `ON` *or* `POWER 1` *commands with other commands on a single line. After sending* `ON` *or* `POWER 1,` *allow at least 15 seconds for the DHD Controller to power up. Once it does, it will accept and properly execute multiple serial commands.*

Table 6-1 lists the RS-232 command set. The “Parameter (min/max)” column shows the valid parameter ranges, or “NA” for commands that take no parameters.

When you enter a valid command, the DHD Controller executes it and acknowledges it with a plus sign on the command line (+ >). When you enter an invalid command – one that is misspelled or followed by values outside the valid range for that command – the DHD Controller ignores it and returns a minus sign (- >).

Table 6-1. Serial Commands

Command	Parameter (min/max)	Value Stored?	Description
Power On/Off Commands			
OFF	NA	NA	Turns projector off
ON	NA	NA	Turns projector on
POWER	0/1	NA	Turns projector on and off
POWER?	NA	NA	Returns power status

Table 6-1. Serial Commands (continued)

Command	Parameter (min/max)	Value Stored?	Description
Input Selection Commands			
COMPONENT	NA	YES	Selects the Component input
COMPOSITE	NA	YES	Selects the Composite video input
DVI1	NA	YES	Selects the DVI 1 input
DVI2	NA	YES	Selects the DVI 2 input
HD1	NA	YES	Selects the RGB HD 1 input
HD1PASS	NA	YES	Loops HD1 input to RGBHV output
HD2	NA	YES	Selects the RGB HD 2 input
HD2PASS	NA	YES	Loops HD2 input to RGBHV output
INPUT?	NA	NA	Returns active input
SVIDEO1	NA	YES	Selects the S-Video 1 input
SVIDEO2	NA	YES	Selects the S-Video 2 input
Aspect Ratio Commands			
ANAMORPHIC	NA	YES	Selects the Anamorphic aspect ratio
ASPECT?	NA	NA	Returns current aspect ratio
ASPECTIN?	NA	NA	Returns the input source aspect ratio
ASPECTOUT?	NA	NA	Returns output screen size
CINEMA	NA	YES	Selects the Cinema aspect ratio
LETTERBOX	NA	YES	Selects the Letterbox aspect ratio
OUT169	NA	YES	Sets the output screen to 1.78:1 (16:9)
OUT235	NA	YES	Sets the output screen to 2.35:1
STANDARD	NA	YES	Selects the Standard (4:3) aspect ratio
VIRTUALWIDE	NA	YES	Selects the VirtualWide aspect ratio
VIRTUAL235	NA	YES	Selects the Virtualwide 2.35 aspect ratio

Table 6-1. Serial Commands (continued)

Command	Parameter (min/max)	Value Stored?	Description
Picture Adjust Commands			
BRIGHTNESS	-100/100	YES	Sets a value for brightness
BRIGHTNESS?	NA	NA	Returns brightness setting value
CHROMADELAY	-12/12	YES	Sets a value for input color chroma delay
CHROMADELAY?	NA	NA	Returns input color chroma delay setting
COLOR	-100/100	YES	Sets a value for color
COLOR?	NA	NA	Returns color setting value
CONTRAST	-100/100	YES	Sets a value for contrast
CONTRAST?	NA	NA	Returns contrast setting value
FILMMODE	0/1	YES	Sets Film Mode off (0) or on (1)
FILMMODE?	NA	NA	Returns Film Mode setting (0 = off; 1 = on)
FILTER	0/15	YES	Sets a value for input color noise filter
FILTER?	NA	NA	Returns input color noise filter setting
PHASE	0/3	YES	Adjusts phase
PHASE?	NA	NA	Returns phase setting value
SHARPNESS	-6/6	YES	Sets a value for sharpness
SHARPNESS?	NA	NA	Returns sharpness setting value
TINT	-100/100	YES	Sets a value for tint
TINT?	NA	NA	Returns tint setting value
Image Preset Commands			
CUSTOM1	NA	YES	Loads “Custom 1” image preset
CUSTOM2	NA	YES	Loads “Custom 2” image preset
DAY	NA	YES	Loads “ISF Day” image preset
NIGHT	NA	YES	Loads “ISF Night” image preset
PRESET?	NA	NA	Returns currently-selected preset (ISF Day, ISF Night, Custom 1 or Custom 2)

Table 6-1. Serial Commands (continued)

Command	Parameter (min/max)	Value Stored?	Description
Input Position Commands			
IHEIGHT	-100/100	YES	Sets the value for input height
IHEIGHT?	NA	NA	Returns input height value
IHPOS	-100/100	YES	Sets a value for horizontal input position
IHPOS?	NA	NA	Returns input horizontal position value
IVPOS	-100/100	YES	Sets a value for vertical input position
IVPOS?	NA	NA	Returns input vertical position value
IWIDTH	-100/100	YES	Sets the value for input width
IWIDTH?	NA	NA	Returns input horizontal width value
OVERSCAN	0/10	YES	Sets the overscan percentage
OVERSCAN?	NA	NA	Returns overscan percentage
Output Shift Commands			
OHEIGHT	-100/100	YES	Sets the value for output height
OHEIGHT?	NA	NA	Returns output height value
OHPOS	-100/100	YES	Sets the value for output horizontal position
OHPOS?	NA	NA	Returns output horizontal position value
OVPOS	-100/100	YES	Sets the value for output vertical position
OVPOS?	NA	NA	Returns output vertical position value
OWIDTH	-100/100	YES	Sets the value for output width
OWIDTH?	NA	NA	Returns output horizontal width value

Table 6-1. Serial Commands (continued)

Command	Parameter (min/max)	Value Stored?	Description
Miscellaneous Commands			
BKGND	-100/100	YES	Sets the background color for letterbox or 4:3 aspect ratio (-100 = black; 100 = white)
BKGND?	NA	NA	Returns background setting value
DATE?	NA	NA	Returns product manufacture date
DISPLAY	2/5	YES	Sets display device input source, as follows: 2 = VX-60d/-80d RGB 3 = VX-60d/-80d DVI/HDMI 4 = VX-40d/-50d RGB 5 = VX-40d/-50d DVI/HDMI
DISPLAY?	NA	NA	Returns display device input source value
HDINPUTRES	NA	YES	Sets YPbPr input resolution and refresh rate for HD1/HD2, as follows: 0 = 480i 1 = 480p 2 = 576i 3 = 576p 4 = 720p / 60 Hz 5 = 1080i / 60 Hz 6 = 720p / 50 Hz 7 = 1080i / 25 Hz Any other value = Auto
HWVER?	NA	NA	Returns hardware version number
INRES?	NA	NA	Returns input resolution
LENS1?	NA	NA	Returns Lens 1 configuration
LENS2?	NA	NA	Returns Lens 2 configuration
OUTRES	0/5	YES	Sets output resolution, as follows: 0 = 480i 1 = 576i 2 = 480p 3 = 576p 4 = 720p 5 = 1080i
OUTRES?	NA	NA	Returns output resolution
SWVER?	NA	NA	Returns software version number
TRIGGER	1/3	YES	Assigns trigger to currently-selected aspect ratio

Notes:

7. Specifications

7.1 VX-40d/-50d/-60d/ -80d Specifications

Table 7-1 lists the VX-40d/-50d/-60d/-80d specifications.

Table 7-1. VX-40d/-50d/-60d/-80d Specifications

Projector Type:	Digital Light Processing (DLP), 3-chip, 16:9 SuperOnyx DMD
Native Resolution:	**VX-40d/-50d:** 1280 x 720 (16:9) **VX-60d/-80d (788p):** 1400 x 788 (16:9) **VX-60d/-80d (1050p):** 1400 x 1050 (4:3)
Aspect Ratios:	Refer to Table 7-2
Video Standards:	Refer to Table 7-2
DTV Compatibility:	480p, 720p, 1080i
Scan Frequency:	Horizontal: 15 kHz to 120 kHz Vertical: 23.97 Hz to 150 Hz
Picture Size (16:9 Screen):	**VX-40d/-60d:** Recommended width = 72 to 192 in. Maximum width = 300 in. **VX-50d:** Recommended width = 72 to 240 in. Maximum width = 350 in. **VX-80d:** Recommended width = 72 to 288 in. Maximum width = 375 in.
Throw Distance (Factor x Screen Width):	**VX-40d/-50d:** Refer to Table 3-3 **VX-60d/-80d:** Refer to Table 3-4
Horizontal and Vertical Offset:	**VX-40d/-50d/VX-60d/-80d with Telesto A Lens:** None **VX-40d/-50d with Telesto B, C, D or E Lens:** Horizontal: 25% of screen width left or right Vertical: 65% of screen height up or down **VX-60d/-80d with Telesto B, C, D or E Lens:** Horizontal: 25% of screen width left or right Vertical: 50% of screen height up or down
Lamp:	**VX-40d/-60d:** 1,000 Watt Xenon lamp module **VX-50d/-80d:** 1,200 Watt Xenon lamp module
Estimated Lamp Life:	1,000 hours
Inputs:	(1) RGBHV, 5xBNC (from DHD Controller) (1) DVI with HDCP (from DHD Controller) (1) RS-232 (from DHD Controller) (1) RS-422 (1) Composite Video (1) Component Video (1) S-Video
Controls:	- Built-in keypad - IR remote - Serial commands via RS-232 (from DHD Controller)

Table 7-1. VX-40d/-50d/-60d/-80d Specifications (continued)

Brightness and Contrast:	**Cinema Standards Measurement System (CSMS) Specifications** - Brightness: 86.0 foot-Lamberts (fL) (VX-40d); 107.3 fL (VX-50d); 94 fL (VX-60d); 188.6 fL (VX-80d) - Contrast Ratio (variable, based on lens aperture setting): 233:1 - 285:1 (VX-40d); 229:1 - 279:1 (VX-50d); 227:1 - 282:1 (VX-60d); 225:1 - 277:1 (VX-80d) These measurements are taken from the projector in a controlled, home theater environment. All measurements are made to ANSI/NAPM IT7.228-1997 specifications using the Photo Research PR-650 SpectraColorimeter and Minolta LS-100 Luminance Meter, Video Essentials test DVD and a 1.3 gain, 72-inch wide screen. The projector is calibrated to a color temperature of 6,500K and has a minimum of 150 hours of usage. The foot-Lambert (fL) is the unit of measurement used in commercial movie theaters to express image brightness at the screen surface. The Society of Motion Picture and Television Engineers (SMPTE) specifies 16 fL as the target image brightness for film-based projectors using an open gate (without film in the projector). More importantly, today SMPTE specifies 12 fL as the target image brightness in Digital Cinema theaters. The foot-Lambert measurement is dependent on screen size, screen gain and projector light output. **Home Theater Calibration Specifications** - Light Output: 2180 ANSI Lumens (VX-40d); 3462 ANSI Lumens (VX-50d); 2360 ANSI Lumens (VX-60d); 5740 ANSI Lumens (VX-80d) - Contrast Ratio (variable, based on lens aperture setting): 233:1 - 285:1 (VX-40d); 229:1 - 279:1 (VX-50d); 227:1 - 282:1 (VX-60d); 225:1 - 277:1 (VX-80d) These specifications are obtained by calibrating the projector as described above for CSMS measurements. **Industry-Standard Specifications** - Light Output: 4000 ANSI Lumens (VX-40d and VX-60d); 6000 ANSI Lumens (VX-50d); 8000 ANSI Lumens (VX-80d) - Contrast Ratio (variable, based on lens aperture setting): 1500 - 2000:1 These are typical projector brightness and contrast specifications found in most companies' sales literature. Runco includes these measurements in its literature to allow for direct comparison with other manufacturers' projectors. These measurements are typically taken at 9,000K to 13,000K to get expected performance data when the projector is used in professional, commercial and industrial displays.
Power Requirements:	**VX-40d/-60d:** 100 to 240 VAC (auto-sensing), 50/60 Hz, 1,700 Watts **VX-50d/-80d:** 200 to 240 VAC (auto-sensing), 50/60 Hz, 2,100 Watts
Operating Environment:	41°F to 95°F (5°C to 35°C), 20% to 80% humidity (non-condensing)

Table 7-1. VX-40d/-50d/-60d/-80d Specifications (continued)

Dimensions:	See Figure 7-1
Weight (without lens):	**VX-40d/-60d:** 85 lbs. (38.55 kg) **VX-50d/-80d:** 89 lbs. (40.37 kg)
Regulatory Approvals:	Complies with FCC, CE C-Tick
Limited Warranty:	Projector: Two (2) years parts and labor from the date of delivery to the end user. Lamp: 1000 hours or six (6) months, whichever comes first.
Specifications are subject to change without notice.	

7.2 DHD Controller Specifications

Table 7-2 lists the DHD Controller specifications.

Table 7-2. DHD Controller Specifications

Aspect Ratios:	4:3, Letterbox, 16:9 Anamorphic, VirtualWide, Cinema, VirtualWide 2.35
Video Standards:	NTSC, PAL
Output Resolution:	720p
Inputs:	(1) Composite; (2) S-Video; (1) Component; (2) HD-R (Pr), G (Y), B (Pb), H, V; (2) DVI with HDCP
Outputs:	(1) HD-RGBHV (1) DVI-I with HDCP
Control Options:	- Discrete infrared remote - Serial commands via RS-232 - Front-panel controls
RS-232 Communication Parameters:	19200 bps, no parity, 8 data bits, 1 stop bit, no flow control
Trigger Outputs:	(3) +12 VDC, each rated at 750 mA and thermal fuse-protected
Bandwidth:	150 Mega Samples per Second (MSPS)
Power Requirements:	100 to 240 VAC (auto-sensing), 50/60 Hz, 160 Watts
Operating Environment:	41°F to 95°F (5°C to 35°C), 0% to 90% humidity (non-condensing)
Dimensions:	Width = 17.50 inches (444.5 mm) Depth = 11.19 inches (284.1 mm) Height = 3.75 inches (95.3 mm)
Weight:	13.0 lbs. (5.90 kg)
Regulatory Approvals:	Complies with FCC, CE C-Tick
Limited Warranty:	Two (2) years parts and labor from the date of delivery to the end user.

Specifications are subject to change without notice.

7.3 VX-40d/-50d/-60d/-80d Dimensions

Figure 7-1 shows the VX-40d/-50d/-60d/-80d dimensions (all dimensions are in inches).

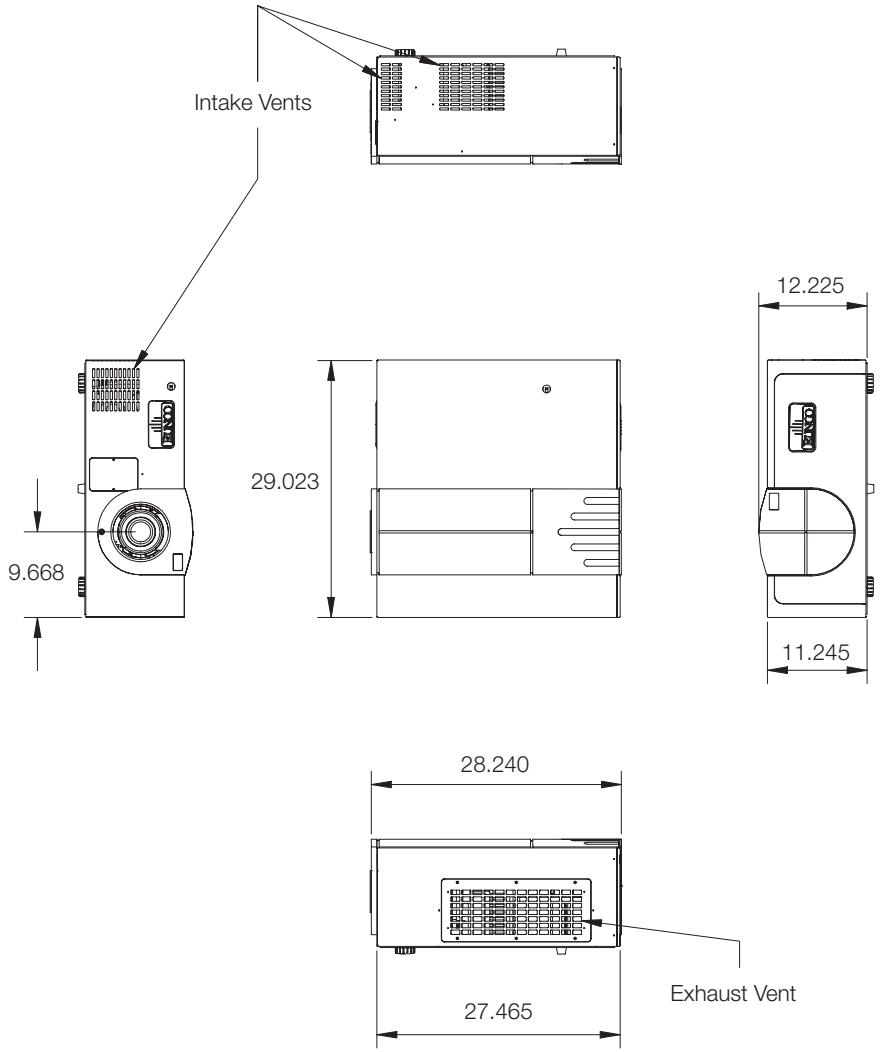

Figure 7-1. VX-40d/-50d/-60d/-80d Dimensions

Notes:

SERIAL NUMBER

RUMA-011010
rev 07-20-06 v3.1

Runco International • 2900 Faber Street • Union City, CA 94587 • Ph (510) 324-7777 / (800) 23RUNCO / Fax (510) 324-9300
www.runco.com