myprojectorlamps.com

The most trusted, dependable name in projector lamp sales.

http://www.myprojectorlamps.com

http://www.myprojectorlamps.ca

http://www.myprojectorlamps.eu

The following projector manual has not been modified or altered in any way.

OWNER'S OPERATING MANUAL

SIGNATURE CINEMA

SC-1

Three-Chip, Digital Light Processing™ Projector and Digital High Definition (DHD™) Controller

RUNCO

THE WORLD'S FINEST HOME THEATER PRODUCTS™

TWO YEAR LIMITED WARRANTY

For Projectors, Video Processors and Controllers

Congratulations on your purchase of a Runco video product and welcome to the Runco family! We believe Runco produces "The World's Finest Home Theater Products." With proper installation, setup and care, you should enjoy many years of unparalleled video performance.

This is a LIMITED WARRANTY as defined in the Magnuson-Moss Warranty Act. Please read it carefully and retain it with your other important documents.

WHAT IS COVERED UNDER THE TERMS OF THIS LIMITED WARRANTY:

SERVICE LABOR: Runco will pay for service labor by a Runco Authorized Service Center when needed as a result of manufacturing defect for a period of two (2) years from the effective date of delivery to the end user (excluding the lamp).

PARTS (not including the lamp): Runco will provide new or rebuilt replacement parts for the parts that fail due to defects in materials or workmanship for a period of two (2) years from the effective date of delivery to the end user. Such replacement parts are then subsequently warranted for the remaining portion (if any) of the original warranty period.

PROJECTOR LAMP: Runco will pay for service labor by a Runco Authorized Service Center when needed as a result of a manufacturing defect for a period of six (6) months or 1000 hours, whichever comes first, from the effective date of delivery to the end user. In addition, Runco will provide a new or rebuilt replacement lamp for the lamp that fails due to defects in materials or workmanship for a period of six (6) months or 1000 hours, whichever comes first, from the effective date of delivery to the end user. Such replacement lamps are then subsequently warranted for the remaining portion (if any) of the original warranty period.

WHAT IS NOT COVERED UNDER THE TERMS OF THIS LIMITED WARRANTY:

This Limited Warranty only covers failure due to defects in materials and workmanship that occur during normal use and does not cover normal maintenance. This Limited Warranty does not cover cabinets or any appearance items; failure resulting from accident, misuse, abuse, neglect, mishandling, misapplication, faulty or improper installation or setup adjustments; improper maintenance, alteration, improper use of any input signal; damage due to lightning or power line surges, spikes and brownouts; damage that occurs during shipping or transit; or damage that is attributed to acts of God. In the case of remote control units, damage resulting from leaking, old, damaged or improper batteries is also excluded from coverage under this Limited Warranty.

CAUTION: THIS LIMITED WARRANTY ONLY COVERS RUNCO PRODUCTS PURCHASED FROM RUNCO AUTHORIZED DEALERS. ALL OTHER PRODUCTS ARE SPECIFICALLY EXCLUDED FROM COVERAGE UNDER THIS WARRANTY. MOREOVER, DAMAGE RESULTING DIRECTLY OR INDIRECTLY FROM IMPROPER INSTALLATION OR SETUP IS SPECIFICALLY EXCLUDED FROM COVERAGE UNDER THIS LIMITED WARRANTY. IT IS IMPERATIVE THAT INSTALLATION AND SETUP WORK BE PERFORMED ONLY BY AN AUTHORIZED RUNCO DEALER TO PROTECT YOUR RIGHTS UNDER THIS WARRANTY. THIS WILL ALSO ENSURE THAT YOU ENJOY THE FINE PERFORMANCE OF WHICH YOUR RUNCO PRODUCT IS CAPABLE WHEN INSTALLED AND CALIBRATED BY RUNCO AUTHORIZED PERSONNEL.

RIGHTS, LIMITS AND EXCLUSIONS:

Runco limits its obligations under any implied warranties under state laws to a period not to exceed the warranty period. There are no express warranties. Runco also excludes any obligation on its part for incidental or consequential damages related to the failure of this product to function properly. Some states do not allow limitations on how long an implied warranty lasts, and some states do not allow the exclusion or limitation of incidental or consequential damages. So the above limitations or exclusions may not apply to you. This warranty gives you specific legal rights, and you may also have other rights that vary from state to state.

EFFECTIVE WARRANTY DATE:

This warranty begins on the effective date of delivery to the end user. For your convenience, keep the original bill of sale as evidence of the purchase date.

IMPORTANT – WARRANTY REGISTRATION:

Please fill out and mail your warranty registration card. It is imperative that Runco knows how to reach you promptly if we should discover a safety problem or product update for which you must be notified.

CONTACT A RUNCO AUTHORIZED SERVICE CENTER TO OBTAIN SERVICE:

Repairs made under the terms of this Limited Warranty covering your Runco video product will be performed at the location of the product, during usual working hours, providing location of product is within normal operating distance from a Runco Authorized Service Center. In some instances it may be necessary for the product to be returned to the Runco factory for repairs. If, solely in Runco's judgment, location of product to be repaired is beyond normal operating distance of the closest Runco Authorized Service Center, or the repair requires the unit be returned to the Runco factory, it is the owner's responsibility to arrange for shipment of the product for repair. These arrangements must be made through the selling Runco Dealer. If this is not possible, contact Runco directly for a Return Authorization number and shipping instructions. Runco will return product transportation prepaid in the United States, unless no product defect is discovered. In that instance, shipping costs will be the responsibility of the owner.

COPYRIGHT AND TRADEMARKS:

© Copyright 2007 Runco International. This document contains proprietary information protected by copyright, trademark and other intellectual property laws. All rights are reserved. No part of this manual may be reproduced by any mechanical, electronic or other means, in any form, without prior written permission of the manufacturer.

Reflection, Enhanced GEN3, DHD, Vivix, Virtual Cinema, CineWide, AutoScope, O-Path, CinOptx, LiveLink, CSMS, SuperOnyx and VirtualWide are trademarks of Runco International. All other trademarks and registered trademarks used in this document are the property of their respective owners.

Runco International products are manufactured under one or more of the following patents: US. Patent 6755540 and Other Patents Pending.

ADDITIONAL INFORMATION:

To locate the name and address of the nearest Runco Authorized Service Center, or for additional information about this Limited Warranty, please call or write:

RUNCO INTERNATIONAL, INC.
Attn: Customer Service Department
2900 Faber Street
Union City, CA 94587
Ph: (510) 324-7777
Fax: (510) 324-9300
Toll Free: (800) 23-RUNCO

RUNCO VIDEO-PRODUCT INFORMATION
RETAIN THIS INFORMATION FOR YOUR RECORDS

Model Purchased _____ Date _____

Serial Number _____

Runco Authorized Dealer Name _____

Address _____

City _____ State/Province _____ Postal Code _____

Phone _____ Fax _____

Safety Precautions

Thank you for your purchase of this quality Runco video projector! It has been designed to provide you with the quality of video that is expected in a home theater. For the best performance, please read this manual carefully as it is your guide through the menus and operation.

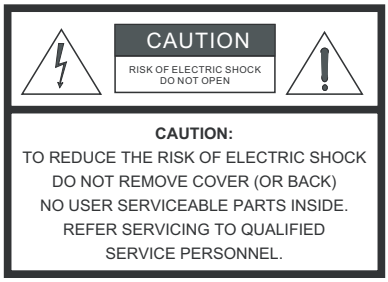

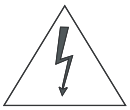

WARNING
This symbol is intended to alert the user to the presence of uninsulated “dangerous voltage” within the product’s enclosure that may be of sufficient magnitude to constitute a risk of electric shock.

This symbol is intended to alert the user to the presence of important operating and maintenance (servicing) instructions in the literature accompanying the appliance.

This equipment has been tested and found to comply with the limits for a Class B digital device, pursuant to Part 15 of the FCC Rules. These limits are designed to provide reasonable protection against harmful interference in a residential installation.

1. Read these instructions.
2. Keep these instructions.
3. Heed all warnings.
4. Do not use this equipment near water, outdoors or otherwise exposed to the elements.
5. Clean only with a dry cloth.
6. Do not block any ventilation openings.
7. Do not install near any heat sources such as radiators, heat registers, stoves, or other apparatus (including amplifiers) that produce heat.
8. Do not defeat the safety feature of the polarized or grounding type plug. A polarized type plug has two blades with one wider than the other. A grounding type plug has two blades and a third grounding prong. The third prong is provided for your safety. If the provided plug does not fit into your outlet, consult an electrician for the replacement of the obsolete outlet.
9. The 12V trigger only outputs DC 12V signal for triggering. Do not connect to any other power input or output. This could cause damage to this unit.
10. Only use accessories specified by Runco International.
11. Keep the packing material in case the equipment should ever need to be shipped.
12. Unplug this projector during lightning storms or when it will not be used for an extended period of time.
13. The lamp becomes extremely hot during operation. Allow the projector to cool down for at least 10 minutes prior to removing the lamp assembly for replacement. Do not operate lamps beyond the rated lamp life. Excessive operation of lamps beyond rated life could cause them to explode in rare occasions.
14. Refer all servicing to qualified service personnel. Servicing is required when the projector has been damaged in any way, objects have fallen or spilled into the projector, the projector has been exposed to rain or moisture, does not operate normally, or has been dropped.

Table of Contents

TWO YEAR LIMITED WARRANTY ..... **iii**

Safety Precautions ..... **vi**

1. Introduction **1**

About This Manual 1

Target Audience 1

If You Have Comments About This Manual... 1

Textual and Graphic Conventions 1

Using This Manual 2

Description, Features and Benefits 3

Key Features and Benefits 4

Parts List 4

2. Controls and Functions **5**

SC-1 at a Glance 5

SC-1 Input Panel 7

SC-1 Control Panel 9

DHD Controller Front Panel 11

DHD Controller Rear Panel 12

Outputs 12

Inputs 12

SC-1 Remote Control Unit 14

3. Installation **17**

Remote Control 17

Notes on Batteries 17

Notes on Remote Control Operation 17

Quick Setup 18

Installation Considerations 19

Installation Type 19

Ambient Light 19

Throw Distance 20

Vertical and Horizontal Position 22

Vertical and Horizontal Lens Shift 22

Moving the SC-1 24

Other Considerations 24

Installing the Projection Lens, Lamp and Cooling 24
Installing the Primary Lens 24
Installing the Lamp 26
Liquid Cooling 27
Installing the Extractor Fan and Exhaust Duct 28
Installing the Optional CineWide Lens Mount 29
Raise the Feet 29
Attach Extension Bracket to Lens Motor 30
Install Anamorphic Lens Motor 30
Mounting the SC-1 31
Adjusting the Feet 31
Tilting the Projector 31
Connections to the SC-1 and DHD Controller 32
Input Panel Access 32
Connecting the DHD Controller to the SC-1 32
Connecting Source Components to the DHD Controller 34
RS-232 Controller Connection 38
Connecting 12-volt Trigger Outputs to External Equipment 38
Connecting an External IR Receiver to the DHD Controller 39
Connecting an External Power Supply/Ballast to the Projection Head 40
Connecting to AC Power 43
Turning on the Power 44
Defining the Installed Lamp Size 44
Power-Up Sequence 45
Maximizing Light Output 46
Adjusting the Picture Orientation 47
Primary Lens Adjustments 47
Focus 48
Zoom 48
Horizontal and Vertical Lens Shift 48
Installing and Adjusting the CineWide Anamorphic Lens 49
Attach Lens Mounting Assembly to Lens Motor Carriage Plate 49
Configure Lens Motor Trigger 51
Adjust the Anamorphic Lens 51

Calibrating Projector Input 2 (DVI) 54
TheaterMaster Remote Control Functions 56
Navigating the Projector Menus 57
Channel Setup 57
Auto Setup 59
Size and Position Menu 60
Image Settings Menu 62
Working With the Lamp 66
4. Operation 69
Using the On-Screen Menus 69
Main Menu 71
Input Source 71
Aspect Ratio 71
Picture 74
Input Position 78
ISF Presets 79
Information 79
Calibration 80
Service 82
5. Maintenance and Troubleshooting 87
Safety Guidelines 87
AC/Power Precautions 87
Maintaining Proper Cooling 88
Ventilation 88
Air Filter 88
Liquid Cooler 88
Exhaust Duct and Lamp Fan Interlocks 88
Maintenance and Cleaning 89
Electrical 89
Optical 89
Required Materials and Supplies 89
Cleaning the Lens 90
Cleaning the Reflector 90
Cleaning Other Components 90

Lamp and Filter Replacement 91
Lamp Replacement 91
Filter Replacement 95
Lens Replacement 95
Troubleshooting Tips 96
Error Codes 98
6. Serial Communications 101
RS-232 Connection and Port Configuration 101
Serial Command Syntax 101
7. Specifications 107
SC-1 Specifications 107
DHD Controller Specifications 109
SC-1 Dimensions 110

List of Figures

2-1. SC-1 Top/Rear/Front/Side View (with Built-In Power Supply/Ballast) 5
2-2. SC-1 Input Panel 7
2-3. SC-1 Control Panel 9
2-4. DHD Controller Front Panel 11
2-5. DHD Controller Rear Panel 12
2-6. DHD Controller/SC-1 Remote Control 14
3-1. Estimating Throw Distance 20
3-2. Projector Placement 22
3-3. Vertical Lens Shift (Example only) 22
3-4. Horizontal Lens Shift (Example only) 23
3-5. Installing the Primary Lens 25
3-6. Accessing the Lamp Cooling Compartment 26
3-7. Lamp Cradle Adjustment 27
3-8. Extractor Fan Configurations 29
3-9. Adjusting the Feet 29
3-10. AutoScope Lens Motor with Extension Bracket 30
3-11. SC-1 with AutoScope Lens Motor (Bottom View) 30
3-12. Tilt Ranges (Front-to-Back and Side-to-Side) 31
3-13. Connecting the SC-1 to the DHD Controller 33
3-14. HDMI Source Connections 34
3-15. Digital (DTV) RGB or Component Video Connections 35
3-16. Analog RGB Connections 36
3-17. Composite, S-Video and Component Video Connections 37
3-18. RS-232 Control System Connection 38
3-19. Connecting 12-volt Trigger Outputs 39
3-20. External IR Receiver Connection 39
3-21. External Power Supply/Ballast Connection 40
3-22. SC-1 Lamp Igniter Connection Panel 41
3-23. AC/Lamp Control Input Panel 42
3-24. Checking or Setting Lamp Size 44
3-25. Using LampLOC to Align the Lamp 46
3-26. Horizontal and Vertical Lens Shift Controls 48

3-27. Anamorphic Lens Mouning Assembly - Exploded View....49
3-28. Attaching the Anamorphic Lens to the Lens Ring....50
3-29. TheaterMaster Remote Control for SC-1....55
3-30. Channel Setup Menu....58
3-31. Unlocking a Channel....59
3-32. Resize Presets: No Resizing....60
3-33. Adjusting Black Levels and White Levels Using the Peak Detector....65
4-1. DHD Controller OSD Menu Structure for SC-1....70
4-2. Typical PLUGE Pattern for Adjusting Brightness....75
4-3. Typical Gray Bar Pattern for Adjusting Contrast....76
4-4. Typical Color Bar Pattern for Adjusting Color Saturation and Tint....76
4-5. Typical Test Pattern for Adjusting Sharpness....78
4-6. Keystone Correction....83
5-1. Disconnecting the Old Lamp....92
5-2. Installing A New Lamp....93
5-3. Securing Lamp Anode (+) and Cathode (-) Connectors....93
5-4. Recording the Serial Number of a New Lamp....94
7-1. SC-1 Dimensions (with Built-In Power Supply/Lamp Ballast)....110
7-2. SC-1 Dimensions (without Built-In Power Supply/Lamp Ballast)....111

1. Introduction

1.1 About This Manual

This Owner's Manual describes how to install, set up and operate the Runco Signature Cinema™ SC-1 DLP Projector and DHD Controller.

Throughout this manual, the Runco Signature Cinema™ SC-1 DLP Projector and DHD Controller are referred to collectively as the "SC-1."

Target Audience

Runco has prepared this manual to help home theater installers and end users get the most out of the SC-1.

Runco has made every effort to ensure that this manual is accurate as of the date it was printed. However, because of ongoing product improvements and customer feedback, it may require updating from time to time. You can always find the latest version of this and other Runco product manuals on-line, at www.runco.com.

If You Have Comments About This Manual...

Runco welcomes your comments about this manual. Send them to techpub@runco.com.

Textual and Graphic Conventions

Text Conventions: The following conventions are used in this manual, in order to clarify the information and instructions provided:

- Remote and built-in keypad button identifiers are set in upper-case bold type; for example, "Press **EXIT** to return to the previous menu."
- Computer input (commands you type) and output (responses that appear on-screen) is shown in monospace (fixed-width) type; for example: "To change the aspect ratio to Letterbox, type `LETTERBOX` **`<Enter>`**."
- All keys with functional names are initial-capped, set in bold type and enclosed in angle brackets. These keys are the following: **`<Enter>`**, **`<Spacebar>`**, **`<Control>`**, **`<Esc>`** and **`<Tab>`**.
- **`<Enter>`** indicates that you may press either the RETURN or ENTER key on your keyboard if it has both keys.

In addition to these conventions, underlining, boldface and/or italics are occasionally used to highlight important information, as in this example:

Caution *The SC-1 requires a **dedicated**, 220-VAC/30A circuit. Connect **only** the SC-1 to this circuit.*

Graphic Conventions: These symbols appear in numerous places throughout the manual, to emphasize points that you must keep in mind to avoid problems with your equipment or injury:

Tip — *TIPS highlight time-saving short cuts and helpful guidelines for using certain features.*

Note — *NOTES emphasize text with unusual importance or special significance. They also provide supplemental information.*

Caution — *CAUTIONS alert users that a given action or omitted action can degrade performance or cause a malfunction.*

WARNING — *WARNINGS appear when a given action or omitted action can result in damage to the equipment, or possible non-fatal injury to the user.*

DANGER! — *DANGER appears when a given action can cause severe injury or death.*

1.2 Using This Manual

Use the following table to locate the specific information you need in this manual.

If you need...	... Turn to page:
Information about obtaining service	iv
General information about the Signature Cinema™ SC-1 DLP Projector and DHD Controller	3
Installation instructions	17
First-time configuration instructions	46
Advanced configuration instructions	80
Troubleshooting tips	96
Product specifications	107

1.3 Description, Features and Benefits

When you select a Signature Cinema projector as the centerpiece of your home cinema, Runco becomes your partner in achieving the most extraordinary entertainment experience. As part of this personalized approach, Runco has engineered the SC-1 with a variety of setup tools allowing installation professionals to customize this projector for your unique home.

The SC-1 uses the exclusive Signature CineStep Process™ to produce exceptionally deep black levels, dynamic contrast and detail, and eliminate undesirable RGB characteristics associated with digital projection. With seven lens choices as well as anamorphic lens options, the Signature Cinema SC-1 can be tailored for use in any home. Its tremendous light output is suitable for screens as wide as 40 feet, while the system's digital controller eliminates any video artifacts while faithfully processing input signals.

The SC-1 incorporates today's most advanced widescreen DLP™ technology, with three SuperOnyx™ DMDs™ boasting a phenomenal native resolution of 2048 x 1080. Runco has engineered Imaging Science Foundation™ calibration standards into the SC-1 for the purest video performance, and has incorporated horizontal and vertical lens shift controls to resolve even the most difficult projector placement issues.

The SC-1 is supplied with Runco's next-generation, Digital High Definition (DHD) Controller, featuring advanced Vivix II™ processing. The DHD Controller produces stunning video imagery, elevating even standard NTSC material to near high-definition levels.

Multiple aspect ratio control includes Runco's VirtualWide™ for viewing 4:3 material in widescreen with no loss of picture quality. The DHD provides for a pure digital signal path from input to output, making this system ready for Runco's exclusive LiveLink™ DVI cable solution to preserve HD signal quality over long runs.

For uncompromising widescreen reproduction of movies originally filmed in the "scope" (2.35:1) format, the SC-1 can be equipped with Runco's patent-pending CineWide™ technology, a combination of software, electronics and high-quality anamorphic optics. CineWide maintains constant vertical height on the screen just as in a movie theater. When a viewer transitions from 1.78:1 (16:9) program material to 2.35:1, the image simply gets wider while full height is maintained. Also available with the SC-1 is CineWide with AutoScope™, an enhanced, remote-controlled motorized version of CineWide.

Note *CineWide requires the use of a 2.35:1 or similar aspect ratio superwide format screen.*

Discrete IR and RS-232 control make custom installation seamless, while discrete source and aspect ratio selection accommodate any automation control system.

Key Features and Benefits

The SC-1 offers these key features and benefits:

- Native Resolution: 2048 x 1080
- Three-chip Digital Light Processing (DLP™) system
- Two HDMI Inputs (on DHD Controller) with High-bandwidth Digital Content Protection (HDCP)
- HDTV Compatible
- CinOptx™ *Signature* lens options for stunning sharpness and throw distance flexibility
- Internal electromechanical shutter for quick picture mute and black stand-by
- Inverse telecine deinterlacing of film-originated, standard and high-definition interlaced material with 3:2 pull-down (60 fps) or 2:2 pull-down (50 fps)
- Auto-setup with seamless cut-and-fade source switching
- Control via built-in keypad, infrared (IR) remote or serial commands via RS-232
- LED for 2-digit error codes, plus LCD for text-based status display
- Incoming AC voltmeter

Parts List

Your SC-1 is shipped with the following items. If any items are missing or damaged, please contact your Runco dealer or Runco Customer Service at (800) 23-RUNCO.

- Signature Cinema™ SC-1 DLP Projector and DHD Controller
- Remote Control Unit and two (2), AAA-size batteries
- TheaterMaster Remote Control Unit and four (4), AAA-size batteries
- Power Cords: 110-VAC (for DHD Controller) and 220-VAC (for projector)
- RJ-11 Telephone Cable, 50 feet (15.24 meters)
- Serial Port Adapter, RJ-11 Female to DB-9 Male
- Rack-mounting brackets and hardware for the DHD Controller
- Warranty information and registration card
- Runco SC-1 Owner's Operating Manual (this document)

Optional Accessories:

- CineWide™ technology (fixed, secondary anamorphic lens)
- CineWide™ with AutoScope™ system (secondary anamorphic lens and motorized mount)
- External Power Supply and Lamp Ballast

2. Controls and Functions

2.1 SC-1 at a Glance

Figure 2-1 shows the key SC-1 components. The paragraphs that follow describe them.

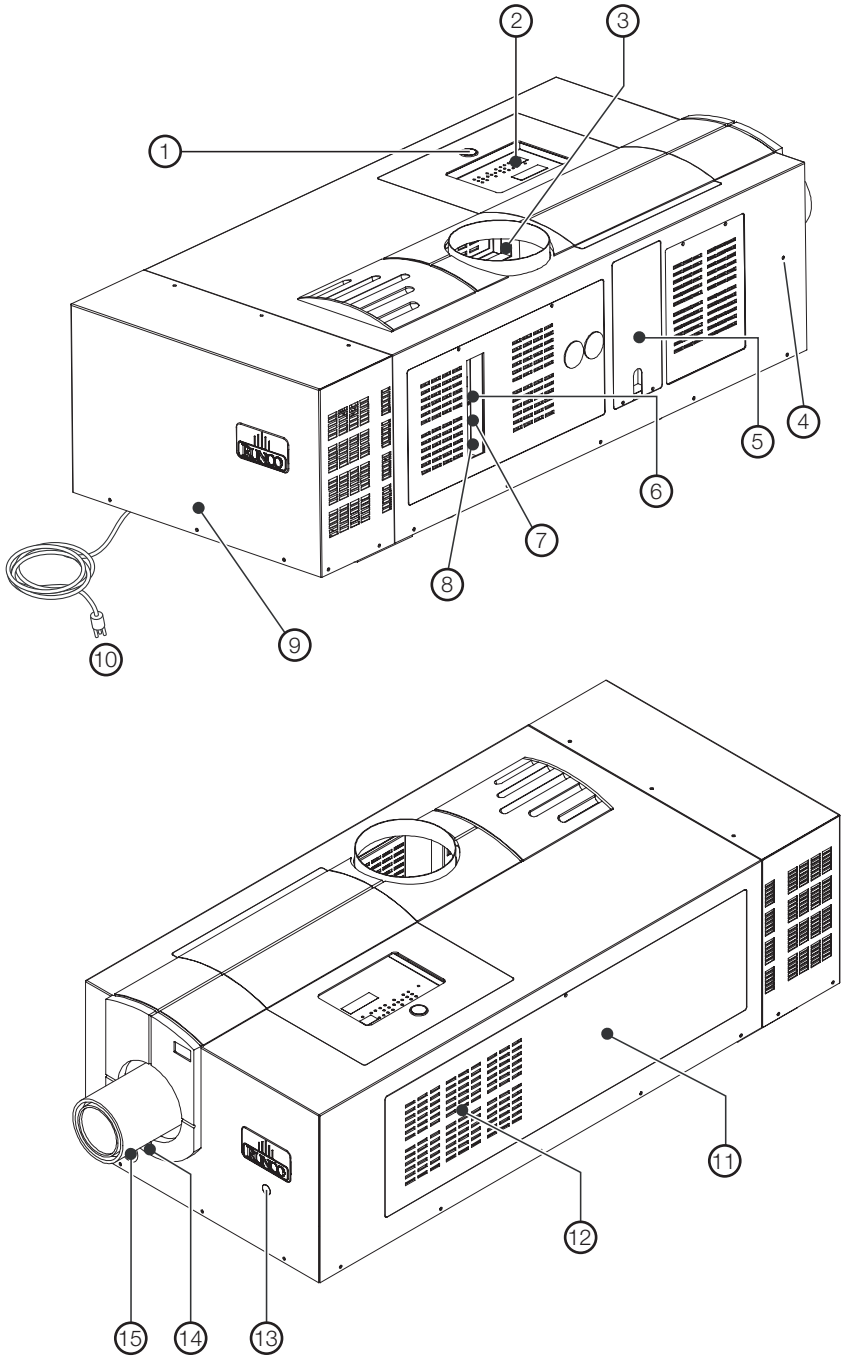

Figure 2-1. SC-1 Top/Rear/Front/Side View (with Built-In Power Supply/Ballast)

1. **DOOR RELEASE**
   To access SC-1 internal components, press this button to release the hinged door on the top of the projector. After closing the door, press the button again to latch it.
2. **STATUS / CONTROL PANEL**
   For a detailed description, refer to ***SC-1 Control Panel*** on page 9.
3. **EXHAUST DUCT**
   Connect the projector's 8" top exhaust hole to a rigid duct. Add a 50/60-Hz heat extractor at the opposite end of the duct so that adequate airflow (at least 600 cubic feet per minute) is maintained near the top of the projector. The vane switch in this vent will prevent start-up and/or trigger a shutdown if airflow is inadequate.
4. **HORIZONTAL OFFSET KNOB ACCESS**
   This opening provides access to the horizontal offset knob, for adjusting the projected image position left or right relative to the lens center. (Use a 4.0-mm hex wrench.)
5. **INPUT PANEL (remove cover to access)**
   Connect the DHD Controller to the projector here; refer to ***Connecting the DHD Controller to the SC-1*** on page 32.
6. **AC INPUT**
   Connects the projection head to the main power supply/lamp ballast.
7. **BALLAST CONTROL CONNECTOR (9-pin, D-sub male)**
   Connects the RS-232 control signals between the ballast and the projection head, enabling the projection head to dictate the amount of current (or power) to be supplied from the ballast to the projection head.
8. **BALLAST SAFETY INTERLOCK CONNECTOR (9-pin, D-sub female)**
   Connects the RS-232 safety interlock signals and the Lamp Enable signal between the ballast and the projection head.
9. **POWER SUPPLY/LAMP BALLAST**
   Provides power to the projector lamp and other projector components. Normally mounted at the rear of the projection head, but can also be detached.
10. **220-VAC LINE CORD**
    Use this to connect the SC-1 to your AC power source.

Caution *The SC-1 requires a **dedicated**, 220-VAC/30A circuit. Connect **only** the SC-1 to this circuit.*

11. **LAMP/AIR FILTER COVER**
    Remove this cover to access the lamp compartment and air filter.
12. **AIR FILTER**
    Intake air flows through the filter before circulating in the front compartment to cool the main electronics. Replace the air filter whenever the lamp is replaced – or more often in dusty or dirty environments. Check condition monthly. Refer to ***Filter Replacement*** on page 95 for detailed instructions.
13. **FRONT IR SENSOR**
    Receives IR commands from the TheaterMaster remote control.
14. **FOCUS KNOB**
    Located directly under the primary lens. Use this to focus projected image.
15. **VERTICAL OFFSET KNOB ACCESS**
    Remove this plastic cover to access the vertical offset knob, for adjusting the projected image position up or down, relative to the lens center.

2.2
SC-1 Input Panel

Figure 2-2 shows the SC-1 rear input panel.

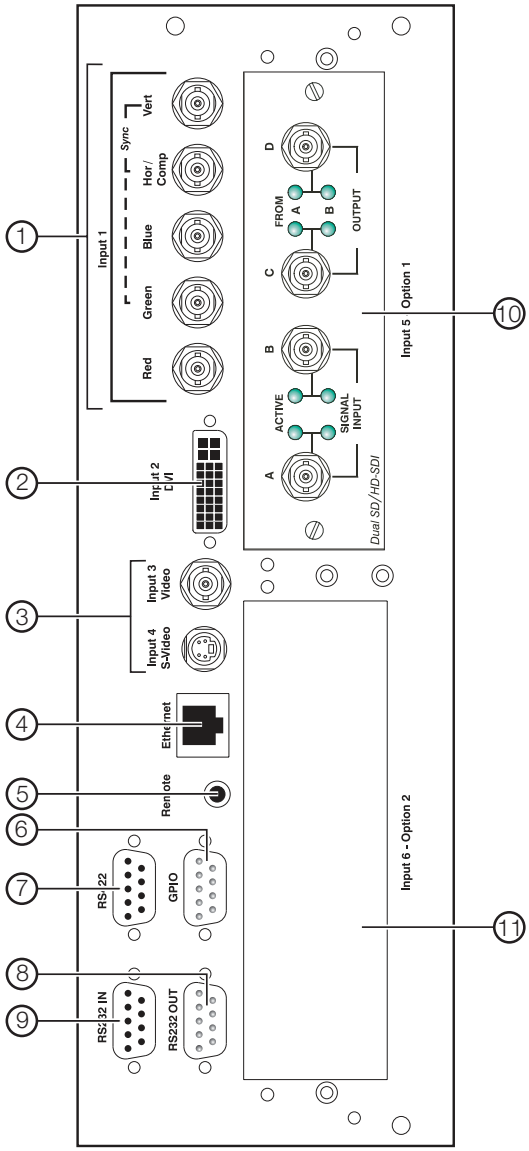

Figure 2-2. SC-1 Input Panel

1. **INPUT 1 (RGBHV)**
   Not used. Connect all video sources to the DHD Controller.
2. **INPUT 2 (DVI)**
   HDCP-compliant digital video input. Connect the HDMI output from the DHD Controller to this input.
3. **INPUT 3 (Video) / INPUT 4 (S-Video)**
   Not used. Connect all video sources to the DHD Controller.
4. **ETHERNET**
   Reserved for future use.
5. **REMOTE**
   Wired input from an external remote control or infrared receiver.
6. **GPIO**
   Not used.
7. **RS422**
   Not used.
8. **RS232 OUT**
   Not used.
9. **RS232 IN (9-pin, D-sub female)**
   Connect the RS-232 output from the DHD Controller here, using the provided RJ11-to-DB9 adapter and communication cable.
10. **INPUT 5 (Option 1)**
    Reserved for future use.
11. **INPUT 6 (Option 2)**
    Reserved for future use.

2.3 SC-1 Control Panel

The SC-1 control panel includes an IR sensor, two-digit error code window, LCD status display and built-in keypad. The built-in keypad provides access to all software controls needed for working with the projector. (For more convenient functionality, use a remote control or serial commands via the DHD Controller.)

Figure 2-3 shows the SC-1 control panel.

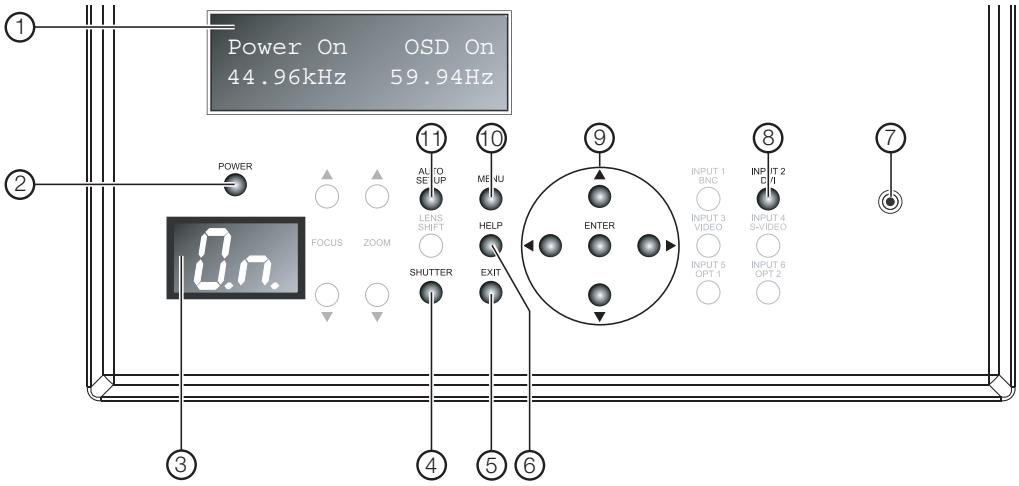

Figure 2-3. SC-1 Control Panel

1. **LCD STATUS DISPLAY**
   Full status and error messages appear in this window.
2. **POWER BUTTON**
   Not used. Use the DHD Controller to turn the projector on or off.
3. **LED STATUS/ERROR CODE WINDOW**
   The LED status window displays an active pattern of segments to indicate that the projector is changing its state from powered down to powered up. The message “On” appears here when the projector has completed its initialization and is ready for use.

   During an error condition that prevents normal operation, a two-digit code appears here to indicate the basic operational state of the projector. Codes are translated in the LCD Status Display window; for a complete error code list, refer to ***Error Codes*** on page 98.
4. **SHUTTER**
   Press and hold this button for two seconds to toggle the internal mechanical shutter blade closed or open. A closed shutter blanks the display (turns it to black). Close the shutter to mute all display while maintaining access to projector functions. Opening the shutter restores the image.
5. **EXIT**
   When in the menu structure, the **EXIT** button brings the menu back one page or cancels the current function.
6. **HELP**
   Press **HELP** to display on-screen help text. Press **HELP** again (or **EXIT**) to hide it.

7. **IR SENSOR**
   Receives IR commands from the TheaterMaster remote control.
8. **INPUT 2 (DVI)**
   Press this button to select projector Input 2 (HDMI output from the DHD Controller).
9. **Menu Navigation Buttons:**

   UP BUTTON (▲)
   Used to move the menu cursor up in the SC-1 menu system.

   LEFT BUTTON (◀)
   Used to move the menu cursor left in the SC-1 menu system.

   DOWN BUTTON (▼)
   Used to move the menu cursor down in the SC-1 menu system.

   RIGHT BUTTON (▶)
   Used to move the menu cursor right in the SC-1 menu system.

   ENTER BUTTON
   When an item is highlighted on the On-Screen Display, press **ENTER** to select the item.
10. **MENU**
    Press this button to show or hide the projector menus.

    Note *The SC-1 has its own internal menu system, separate from that of the DHD Controller. However, it is intended for use by trained service personnel only.*

11. **AUTO SETUP**
    Press this button to initiate an automated process in which the projector optimizes critical display parameters for the current source.

2.4 DHD Controller Front Panel

Figure 2-4 shows the controls and indicators on the DHD Controller front panel; the paragraphs that follow describe them.

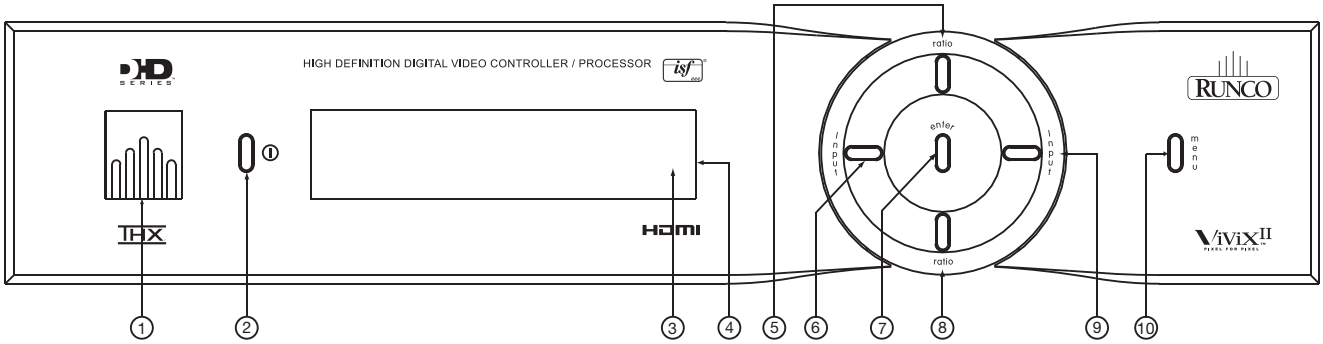

Figure 2-4. DHD Controller Front Panel

1. **RUNCO ICON**
   Lights red to indicate that the DHD Controller is in standby mode; lights blue to indicate that the unit is on.
2. **POWER BUTTON**
   Press once to toggle from standby mode to on mode. Press it again to return to standby mode. For a discrete on or off command, you can use the direct access buttons on the remote control.
3. **IR SENSOR**
   Receives IR commands from the remote.
4. **VACUUM FLUORESCENT DISPLAY**
   Can be used instead of the On-Screen Display (OSD). Displays currently-selected menu or – if no menu is selected – the current source, signal format (NTSC or PAL), input resolution and aspect ratio.
5. **UP BUTTON**
   Use to direct select aspect ratios or move the menu cursor up in the OSD. When no menus are present on-screen, the **UP** button toggles through aspect ratios in the following order:
   Anamorphic - Standard (4:3) - Letterbox - VirtualWide - Cinema - Virtual Cinema

   Note *Virtual Cinema is available only on the SC-1/CineWide. For more information about aspect ratios, refer to Table 4-1.*

6. **LEFT BUTTON**
   Used to direct select inputs or move the menu cursor left in the OSD. When no menu is present on-screen, the **LEFT** button toggles through the different sources, in this order:
   HDMI 2 - HDMI 1 - HD/RGB2 - HD/RGB1 - Component SD - S-Video 2 - S-Video 1 - Composite

7. **ENTER BUTTON**
   When an item is highlighted on the OSD, the **ENTER** button selects the item.
8. **DOWN BUTTON**
   Use to direct select aspect ratios or move the menu cursor down in the OSD. When no menu is present on-screen, this button toggles through the different aspect ratios, in this order:
   Virtual Cinema - Cinema - VirtualWide - Letterbox - Standard (4:3) - Anamorphic
9. **RIGHT BUTTON**
   Used to direct select inputs or move the menu cursor right in the OSD. When no menus are present on-screen, the **RIGHT** button toggles through the different sources, in this order:
   Composite - S-Video 1 - S-Video 2 - Component SD - HD/RGB 1 - HD/RGB 2 - HDMI 1 - HDMI 2
10. **MENU BUTTON**
    Press the **MENU** button to bring up the main menu. Also, if you are in an adjustment mode or function, press **MENU** to bring the menu back one level.

Note *The **UP**, **DOWN**, **LEFT**, **RIGHT**, **ENTER** and **MENU** buttons are functional only when an analog source (HD/RGB, SD Component, Composite or S-Video) is selected.*

2.5 DHD Controller Rear Panel

Figure 2-5 shows the rear connector panel on the DHD Controller.

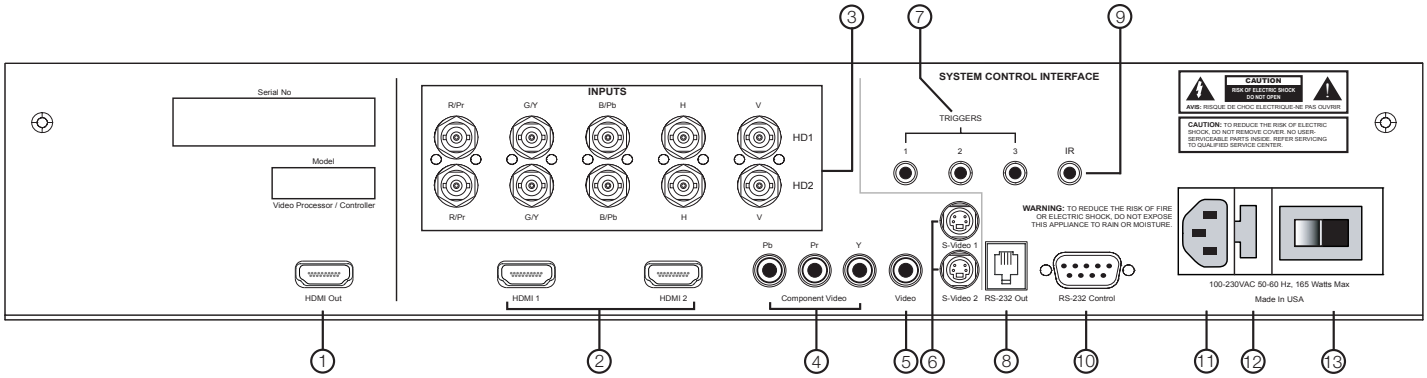

Figure 2-5. DHD Controller Rear Panel

Outputs ➤ 1. **HDMI OUT**
Connect this to **Input 2** (DVI) on the SC-1 (see Figure 2-2).

Inputs ➤ 2. **HDMI 1 / HDMI 2 (Digital)**
Two, HDCP-compliant digital video inputs for connecting a DVD player or HD tuner with a DVI or HDMI output.

3. **HD1 / HD2 (5 x Analog BNCs)**
   Two inputs (five BNCs per input) for connecting either RGB or component high-definition television signals. The DHD Controller automatically detects the signal format: RGB(HV) or YPrPb, 480p, 720p, 480i, 576i or 1080i.
4. **COMPONENT VIDEO (RCA connectors)**
   Standard Definition (480i/576i) Component (YPrPb) input. This is the input for component video from sources such as DVD players.

Tip *For best results, do not run your DVD player in progressive mode.*

5. **COMPOSITE VIDEO INPUT**
   Standard composite video input for connecting a VCR, laser disc player or other composite video source.
6. **S-VIDEO 1 / S-VIDEO 2**
   Two, standard S-Video inputs for connecting a DVD player, satellite receiver or Super VHS (S-VHS) VCR.
7. **12-VOLT (750 mA) TRIGGER OUTPUTS**
   Connection for up to three (3), 12-volt trigger-controlled devices such as retractable screens or screen masks.
8. **RS-232 OUTPUT**
   Connect this to the **RS232 IN** input on the projector, using the provided RJ11-to-DB9 adapter and communication cable.
9. **IR**
   Wired input from a wired remote control or infrared receiver. It is a 3.5-mm, mini phono jack, wired as follows:
   Ring = +5V
   Tip = IR Input
   Sleeve = Ground

Note *When an external remote control or infrared receiver is connected to the wired IR input, the IR sensor on the front of the DHD is disabled.*

10. **RS-232 CONTROL PORT**
    A female, 9-pin D-sub connector for interfacing with a PC or home theater automation/control system.
11. **POWER INPUT (100 to 240 VAC)**
    Connect the DHD Controller to power here.
12. **MAIN AC FUSE**
    This is the main AC input fuse (5mm x 20mm, 500 mA, 250V slow-blow).
13. **MAIN POWER SWITCH**
    Disconnects or applies power to the DHD Controller.

2.6 SC-1 Remote Control Unit

Figure 2-6 shows the SC-1 remote control, and the paragraphs that follow describe its functionality.

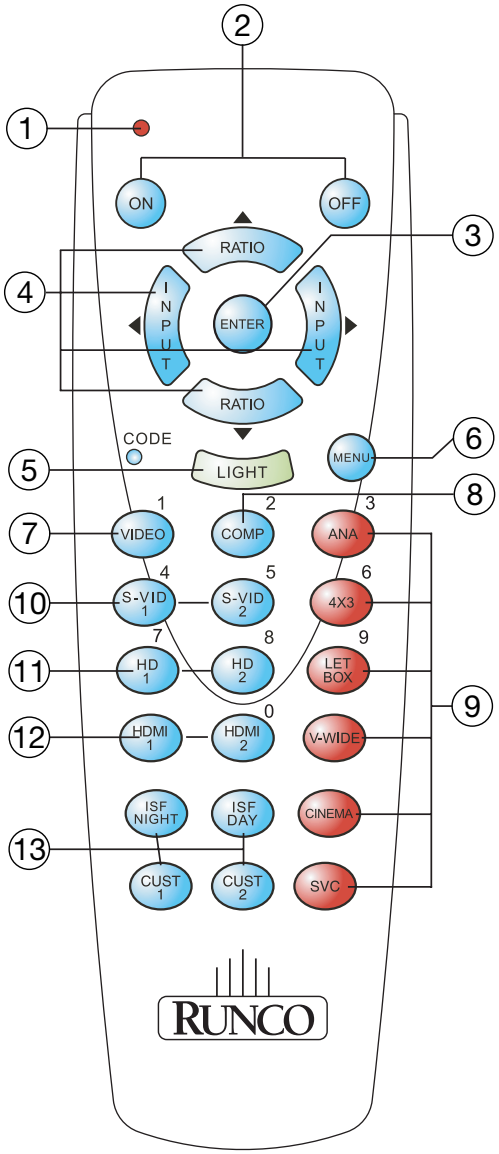

Figure 2-6. DHD Controller/SC-1 Remote Control

1. **IR OUTPUT INDICATOR**
   Lights when a button is pressed to indicate that an IR signal is being transmitted.
2. **ON / OFF**
   Press to turn the projector on or off.
3. **ENTER**
   Press to select a highlighted menu item or confirm a changed setting.
4. **Cursor Buttons (▲, ◀, ▼, ▶)**
   Use these buttons to select items or settings, adjust settings or switch display patterns.

   When no menu is present on-screen, the **UP** and **DOWN** buttons toggle through the available aspect ratios, in this order:
   UP Button = Anamorphic - Standard (4:3) - Letterbox - VirtualWide - Cinema - Virtual Cinema
   DOWN Button = Virtual Cinema - Cinema - VirtualWide - Letterbox - Standard (4:3) - Anamorphic

   Note *Virtual Cinema is available only on the SC-1/CineWide. For more information about aspect ratios, refer to Table 4-1.*

   Likewise, the **LEFT** and **RIGHT** buttons toggle through the different source inputs, in this order:
   LEFT Button = HDMI 2 - HDMI 1 - HD/RGB2 - HD/RGB 1 - Component SD - S-Video 2 - S-Video 1 - Composite
   RIGHT Button = Composite - S-Video 1 - S-Video 2 - Component SD - HD/RGB 1 - HD/RGB 2 - HDMI 1 - HDMI 2
5. **LIGHT**
   Press to illuminate the buttons.
6. **MENU**
   Press this button to access the OSD controls, or to exit the current menu and return to the previous one.

   Note *The **UP**, **DOWN**, **LEFT**, **RIGHT**, **ENTER** and **MENU** buttons are functional only when an analog source (HD/RGB, SD Component, Composite or S-Video) is selected.*

7. **VIDEO (1)**
   Press to select Composite video input as the source or to enter the numeric character “1.”
8. **COMP (Component) (2)**
   Press to select Component SD (480i/576i) video input as the source or to enter the numeric character “2.”

9. **Aspect Ratio Selection Buttons**
   Use the red buttons to select an aspect ratio directly or to enter numeric characters, as follows:

   ANA (16:9) (3)
   For viewing 16:9 DVDs or HDTV programs in their native aspect ratio.

   4X3 (4:3) (6)
   Scales the input signal to fit 4:3 display mode in the center of the screen.

   LETBOX (Letterbox) (9)
   For viewing LaserDisc movies or non-anamorphic DVDs on a 16:9 screen.

   V-WIDE (VirtualWide)
   Enlarges a 4:3 image horizontally in a NON-linear fashion to fit 16:9 full screen display.

   CINEMA
   For viewing 2.35:1 source material.

   SVC (CineWide-equipped projectors only)
   Selects the Virtual Cinema aspect ratio, used for viewing 16:9 source material on a 2.35:1 screen.

10. **S-VID 1 (4) / S-VID 2 (5) (S-Video)**
    Press to select an S-Video input or to enter the numeric character “4” or “5.”

11. **HD 1 (7) / HD 2 (8)**
    Press to select a HD (RGBHV or YPbPr component) input or to enter the numeric character “7” or “8.”

12. **HDMI 1 / HDMI 2 (0)**
    Press to select a Digital Video input. Press **HDMI 2** to enter the numeric character “0.”

13. **Memory Preset Buttons:**

    ISF NIGHT
    Press to recall settings for the current input from the “ISF Night” memory preset.

    ISF DAY
    Press to recall settings for the current input from the “ISF Day” memory preset.

    CUST 1
    Press to recall settings for the current input from the “Custom 1” memory preset.

    CUST 2
    Press to recall settings for the current input from the “Custom 2” memory preset.

3. Installation

3.1 Remote Control

To install batteries in the remote control, press up on the battery cover retainer clip and lift off the cover. Install the two AAA batteries with the correct polarity and then replace the cover.

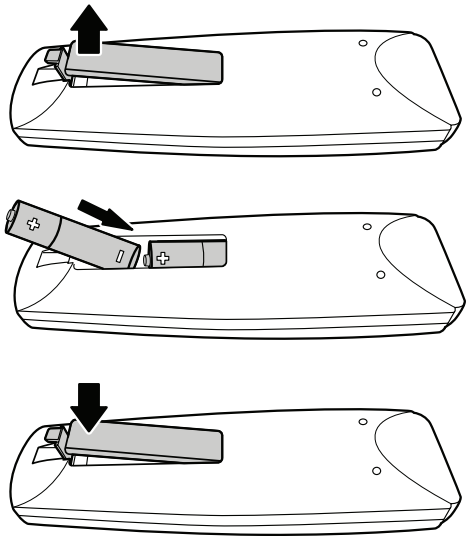

Notes on Batteries

- Make sure that the battery polarities are correct when installing the batteries.
- Do not mix an old battery with a new one or different types of batteries.
- If you will not use the remote control for a long time, remove the batteries to avoid damage from battery leakage.

Notes on Remote Control Operation

- Make sure that there is nothing obstructing the infrared beam between the remote control and the IR receiver on the DHD Controller.
- If the effective range of the remote control decreases, or it stops working, replace the batteries with new ones.
- The remote control may fail to operate if the infrared remote sensor is exposed to bright sunlight or fluorescent lighting.
- Ambient conditions may possibly impede the operation of the remote control. If this happens, point the remote control at the DHD Controller, and repeat the operation.

3.2 Quick Setup

Table 3-1 gives a quick overview of the SC-1 installation process. The sections following this one provide detailed instructions.

Note *Installation should be performed by a qualified custom video installation specialist.*

Table 3-1. Installation Overview

Step	Procedure	For Details, Refer to page...
1	Choose a location for the projector	19
2	Install primary projection lens, lamp and heat extractor	24
3	Install CineWide lens mounting assembly (stationary base plate or AutoScope lens motor – optional)	29
4	Mount the projector	31
5	Connect the DHD Controller to the projector	32
6	Connect signal sources to the DHD Controller	34
7	Connect external controller to RS-232 port (optional)	38
8	Connect AutoScope lens motor and/or other equipment to 12-volt trigger outputs (optional)	38
9	Connect power supply/lamp ballast, if separate from projection head (split-body configuration)	40
10	Apply power to the projector	43, 44
11	For rear-screen installations, select the proper picture orientation	47
12	Primary lens adjustments: projected image size (zoom), position (shift) and focus	22, 47
13	Install CineWide anamorphic lens (optional)	49
14	CineWide lens adjustments: position, pitch (angle), geometry and focus	51
15	Calibrate projector input 2 (DVI): perform Auto Setup, then adjust size/position, input levels, brightness/contrast etc., as needed ***for each channel***	54
16	Adjust lamp output, as needed	66
17	DHD Controller input calibration: adjust the following ***for each DHD Controller input***; save settings when finished: • Aspect ratio • Color level • Brightness • Tint • Contrast • Input position	71 through 79

3.3 Installation Considerations

Proper installation of your projector will ensure the quality of your display. Whether you are installing a projector temporarily or permanently, you should take the following into account to ensure your projector performs optimally.

➤ *Installation Type*

Choose the installation type that best suits your needs: front or rear screen. Table 3-2 compares these various installation methods.

Table 3-2. Projector Installation Options

Advantages	Considerations
Front Screen, Floor Mount Installation	
• Easy to set up • Can be moved or changed quickly • Easy to access	• Shares floor space with audience
Rear Screen, Floor Mount Installation	
• Projector is completely hidden • Projector is easily accessed • Usually good ambient light rejection	• Requires separate room • Installation cost is usually higher
Rear Screen, Floor Mount with Mirror	
• Projector is completely hidden • Usually good ambient light rejection • Requires less space behind screen than other rear screen installations	• Requires separate room • Installation cost is usually higher

➤ *Ambient Light*

In general, minimize or eliminate light sources directed at the screen. Contrast ratio in your images will be noticeably reduced if light directly strikes the screen, such as when a shaft of light from a window or floodlight falls on the image. Images may then appear washed out and less vibrant.

Throw Distance ➤ Throw distance is the distance measured from the front of the projector to the screen. This is an important calculation in any projector installation as it determines whether or not you have enough room to install your projector with a desired screen size and if your image will be the right size for your screen.

You can quickly estimate the throw distance by multiplying the width of the screen by the lens throw ratio; see Figure 3-1. The result of this calculation tells you roughly how far back the projector should be positioned from the screen in order to project a focused image large enough to fill the screen.

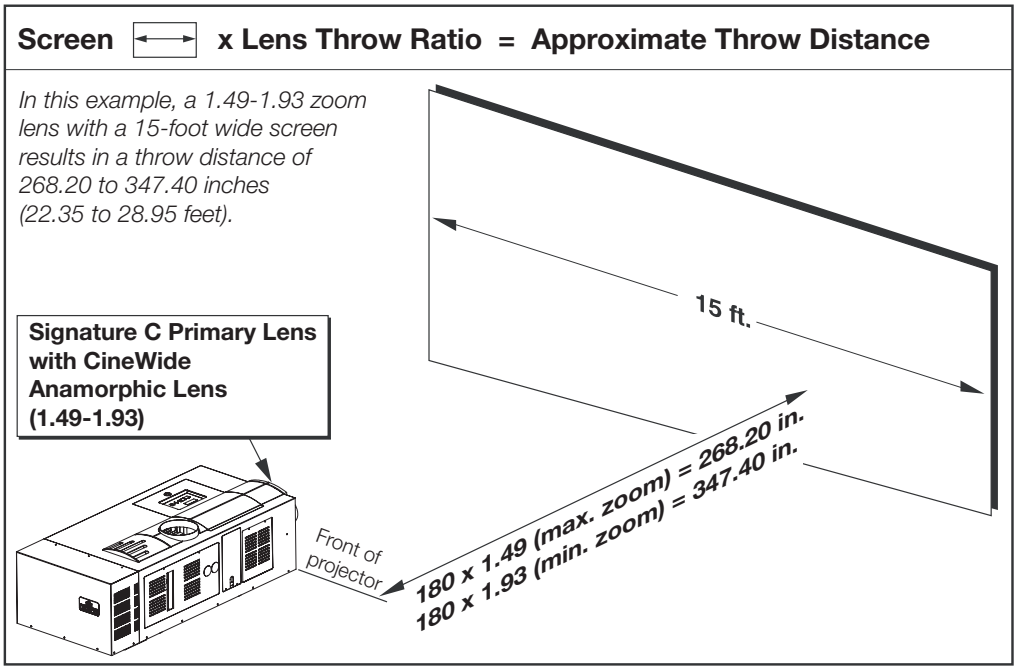

Figure 3-1. Estimating Throw Distance

Throw Distance Ranges: Table 3-3 lists the available lens options for the SC-1 and their associated throw ratios.

Table 3-3. SC-1 Lens Options and Throw Ratios

Signature Lens Option (Note 2)	Throw Ratio with Primary Lens Only	Throw Range in inches, with a 96x54-inch (1.78:1) Screen		Throw Range in inches, with a 102.6x54-inch (1.90:1) Screen (Note 3)		Throw Ratio with Primary Lens and Anamorphic Lens	Throw Range in inches, with a 126.9x54-inch (2.35:1) Screen (Note 3)	
		Min.	Max.	Min.	Max.		Min.	Max.
A	1.40-1.58	134.40	151.68			Not Applicable (Note 2)		
	1.32-1.50			135.43	153.90			
B	1.57-1.93	150.72	185.28					
	1.48-1.81			151.84	185.70			
C	1.96-2.55	188.16	244.80					
	1.84-2.40			188.78	246.24			
						1.49-1.93	189.08	244.92
D	2.37-3.19	227.52	306.24					
	2.25-2.99			230.85	306.77			
						1.80-2.41	228.42	305.83
E	3.22-4.56	309.12	437.76					
	3.02-4.28			309.85	439.13			
						2.44-3.45	309.64	437.80
F	4.30-6.00	412.80	576.00					
	4.03-5.63			413.48	577.64			
						3.05-4.26	387.04	540.59
G	5.50-8.50	528.00	816.00					
	5.16-7.97			529.42	817.72			
						3.91-6.03	496.18	765.21

Notes:

1. *Throw distance does not affect image quality, provided these ranges are taken into account.*
2. *Only the Signature C, D, E, F and G lenses can be used with the optional CineWide (secondary anamorphic) lens. Doing so affects the throw distances as shown here.*
3. *The "1.90:1" throw distances are for reference only. The SC-1 has a native resolution of 2048 x 1080, which is about a 1.90:1 native aspect ratio. With most source material, the SC-1 only uses the center, 1,920 pixels in each row (1920 x 1080 = 16:9 or 1.78:1 native aspect ratio).*

Vertical and Horizontal Position ➤

Proper placement of the projector relative to the screen will yield a rectangular, perfectly-centered image that completely fills the screen.

Ideally, the projector should be positioned perpendicular to the screen and in such a way that the lens center and screen center are aligned with each other, as shown in Figure 3-2.

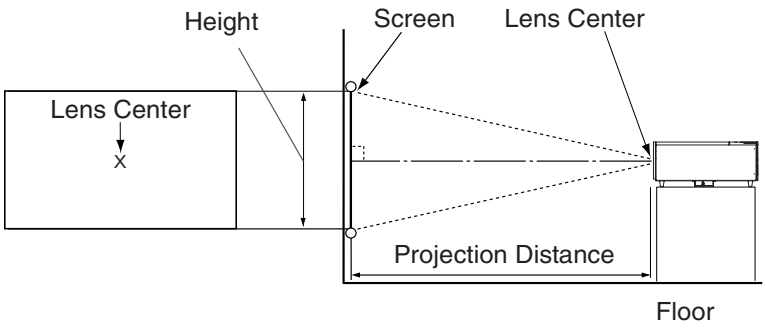

Figure 3-2. Projector Placement

Vertical and Horizontal Lens Shift ➤

If it is not possible to align the projector and screen as shown in Figure 3-2, you can use the mechanical lens shift controls to center the image on the screen. Lens shift is generally expressed as a percentage of the screen height or width, as shown in Figure 3-3 and Figure 3-4.

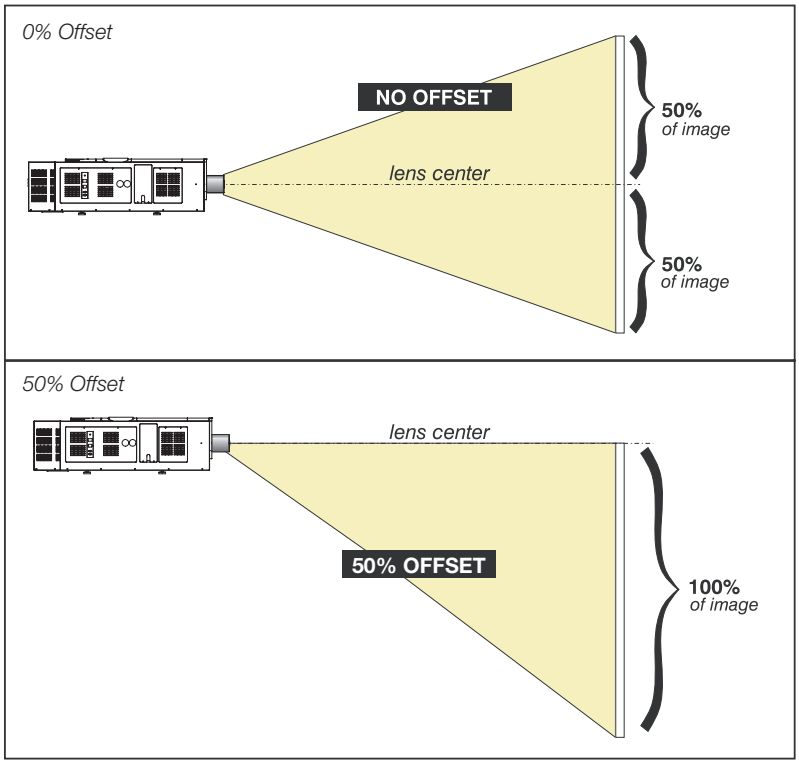

Note: *This is a general example of lens shift. Projectors vary in their shift capabilities.* ***No particular lens or projector is shown in this example.***

Figure 3-3. Vertical Lens Shift (Example only)

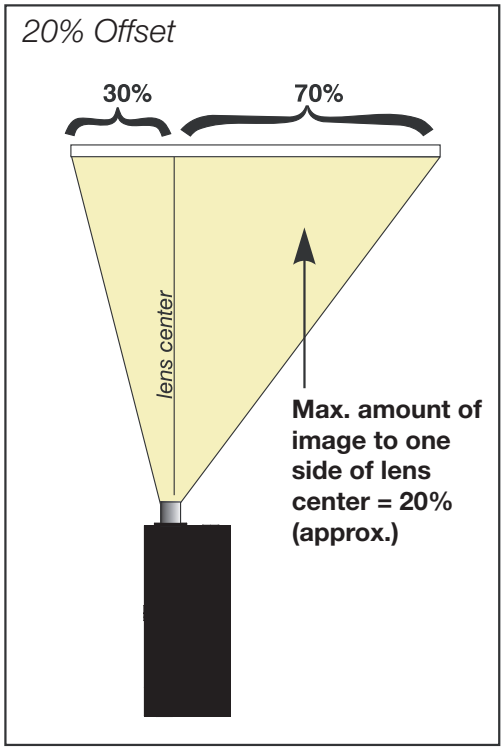

Note: *This is a general example of lens shift. Projectors vary in their shift capabilities.* ***No particular lens or projector is shown in this example.***

Figure 3-4. Horizontal Lens Shift (Example only)

Vertical Lens Shift: The SC-1 provides up to 43% of vertical lens shift up or down. For example, with a 96 x 54-inch (16:9) screen, you can shift the image up to 23.22 inches (59.0 cm) above or below the screen center.

Horizontal Lens Shift: The SC-1 allows up to 20% of horizontal lens shift left or right (17% with a 1.90:1 screen). For example, with a 96 x 54-inch (16:9) screen, you can shift the image up to 19.20 inches (48.8 cm) left or right of the screen center. With a 95 x 50-inch (1.90:1) screen, you can shift the image up to 16.15 inches (41.0 cm) left or right of the screen center.

Note

1. *With zero offset (no vertical or horizontal lens shift), the lens center and screen center are aligned with each other. The SC-1 is never ceiling mounted; offsets are calculated only with the projector upright. These offsets are references to zero offset.*
2. *Vertical shift limits are percentages of the screen height. Horizontal shift limits are percentages of the screen width.*
3. *The SC-1 has a native resolution of 2048 x 1080, which is about a 1.9:1 aspect ratio. For 16:9 material, only the 1920 x 1080 area is used which is a 16:9 (1.78:1) aspect ratio. Most often, the 16:9 throw distance is used. If used with CineWide or CineWide with AutoScope, only the 16:9 area is used.*

If you find that you cannot raise or lower the image enough using mechanical vertical offset, you may need to make keystone adjustments or vertically shift the image using the on-screen display (OSD) controls, to compensate. For detailed instructions, refer to ***Using the On-Screen Menus*** on page 69.

If images remain keystoned or exhibit uneven brightness, the projector may simply be too high or low in relation to the screen. Relocate the projector to correct these issues.

Moving the SC-1 ➤

Four or more people can lift and hand-carry the SC-1 a short distance as required. When using a forklift to transport the SC-1, a specially-designed mounting frame with forklift rails is required; contact Runco International for more information.

Other Considerations ➤

Other considerations and tips that can help improve your installation:

- Keep the ambient temperature constant and below 35°C (95°F). Keep the projector away from heating and/or air conditioning vents. Changes in temperature may cause drifts in the projector circuitry, which may affect performance.
- Keep the projector away from devices that radiate electromagnetic energy such as motors and transformers. Common sources of these include slide projectors, speakers, power amplifiers and elevators.

3.4 Installing the Projection Lens, Lamp and Cooling

Before or after you have positioned the projector in its permanent or temporary location, install the remaining components: the primary lens, lamp and external extractor fan.

Installing the Primary Lens ➤

The projection lens is shipped separately from the projector. Proceed as follows to install the projection lens:

1. Remove the lens plug from the lens opening in the projector.
2. Place the lens cap on the projection lens to protect it from being damaged during the installation process.
3. Remove the rear cap from the lens. This protective cap is only used during shipping to protect the lens from damage.
4. Orient the primary lens with the serial number and UP labels at the top (see Figure 3-5). Fully insert it straight into the lens mount opening all the way back without turning. With the lens fully back, it will seat properly within the lens mount.
5. Lock the lens assembly in place with lens locking lever DOWN.

Caution

1. *The lens seals the projection head, preventing contaminants from entering the area of main electronics. Never attempt to operate the projector without a lens installed. During transport and installation, install a lens plug.*
2. *Always re-install a lens in its previous “UP” orientation.*

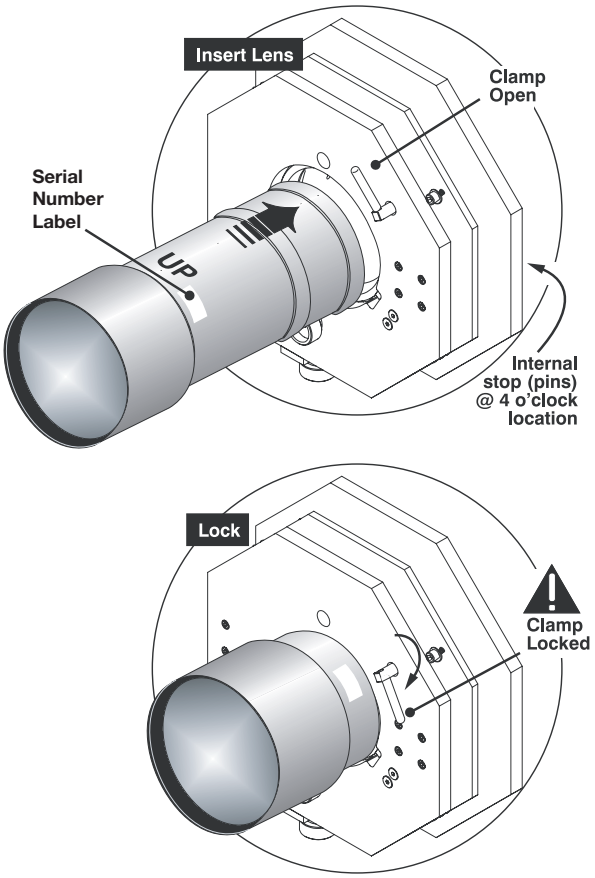

Figure 3-5. Installing the Primary Lens

Installing the Lamp ➤ To install the lamp, remove the screw holding the lamp/air filter cover in place. Then, lift the cover up and away from the projector.

Turn the knob to open the inner lamp cooling compartment and reveal the cathode end (–) of the lamp; see Figure 3-6.

WARNING

Xenon arc lamps are under high pressure and must be handled with great care at all times. Lamps may explode if dropped or mishandled.

Never open the lamp door unless you are wearing protective clothing. Recommended protective clothing includes — but may not be limited to — protective gloves, latex lab gloves, a double-layer 0.040" acetate face shield, and a quilted ballistic nylon jacket or welder's jacket.

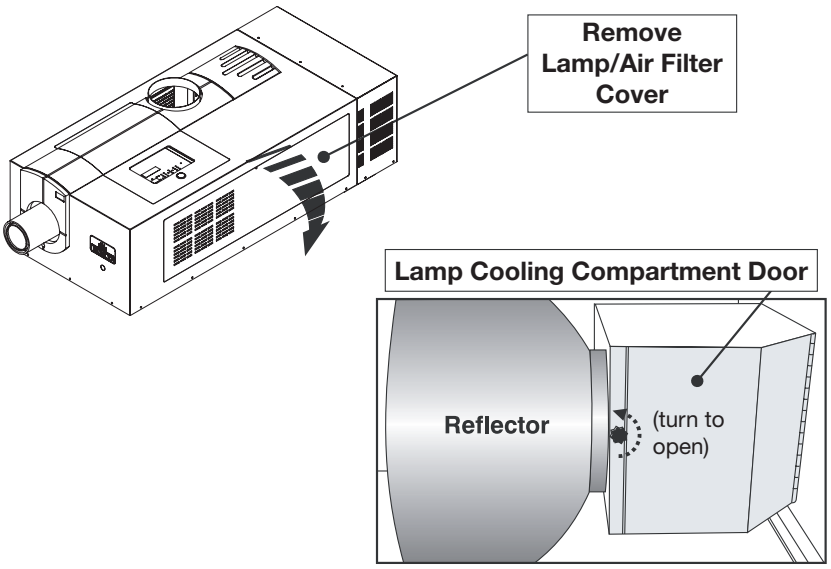

Figure 3-6. Accessing the Lamp Cooling Compartment

Before installing the projector lamp, check the lamp cradle (anode end) location and adjust as necessary; see Figure 3-7. For a 2.0-kW lamp, move the cradle to the rear position, approximately 1” closer to the reflector.

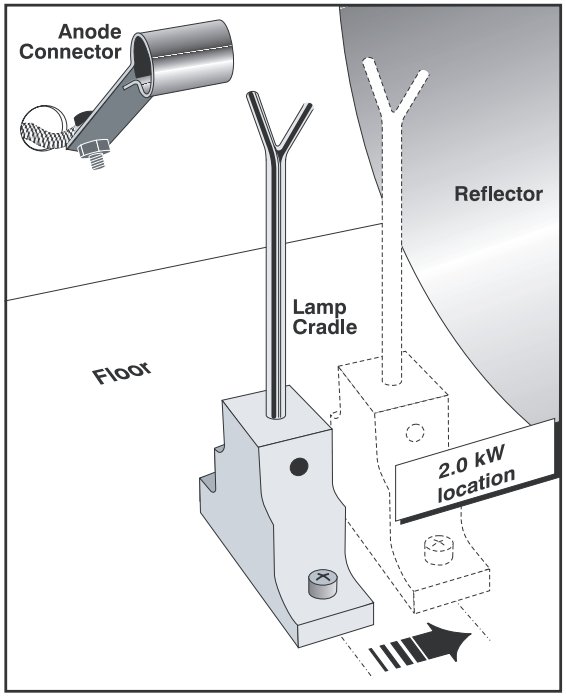

Figure 3-7. Lamp Cradle Adjustment

To complete the lamp installation, refer to ***Lamp and Filter Replacement*** on page 91 for detailed instructions. Observe all warnings, and wear protective clothing and shielding.

Liquid Cooling

During operation, a closed loop of flexible tubing circulates liquid coolant from a small reservoir to critical electronic components located near the front of the projection head. The coolant (a 50/50 mix of distilled water and ethylene glycol) should fill slightly more than half of the reservoir to ensure adequate circulation. The reservoir, which is located in the igniter compartment, is factory-filled and does not require draining for transit. Check the coolant level regularly.

Installing the Extractor Fan and Exhaust Duct

Install an extractor fan and duct to pull warm exhaust air from the projector at a minimum rate of 600 cubic feet per minute (CFM).

WARNING *Do not operate the projector without an extractor fan installed!*

If necessary, consult a knowledgeable HVAC technician for help with designing and installing a cooling solution that best suits your site and installation requirements. Due to the wide variety of available materials and installation methods, Runco can only provide general guidelines. Review the following information carefully and adapt it as appropriate to your specific situation:

- Direct exhaust as necessary to keep ambient air temperature between 50°F (10°C) and 95°F (35°C).
- If the projector is used for extended periods, particularly in a confined space, routing to the outside of the building may be required. In all cases, maintain at least 600 CFM at the projector's top exit port.

  To calculate the air flow, use an air flow meter to measure the ft/min or ft/sec where the duct connects to the projector (measure at this end only). Multiply this reading by the cross-sectional area of the 8" duct (0.34 sq. ft.) to calculate the CFM airflow:

  Measured linear ft/min x 0.34 = CFM

  Given the area of the exhaust duct, the measured air flow must be at least 1765 linear feet per minute (600 ÷ 0.34) in order to maintain 600 CFM.
- Use a duct that is no less than 10 inches and no more than 6 feet long; see Figure 3-8. To prevent possible transfer of fan vibration to the image, do not mount the extractor directly on the projector — include at least 10 inches of duct.
- For longer exhaust runs at your site, add extractors/boosters as necessary. The vane switch at the projector's top exit port will trigger a projector shutdown if the airflow is inadequate.

Note *Do not exceed 6-ft. duct length without adding additional extractors.*

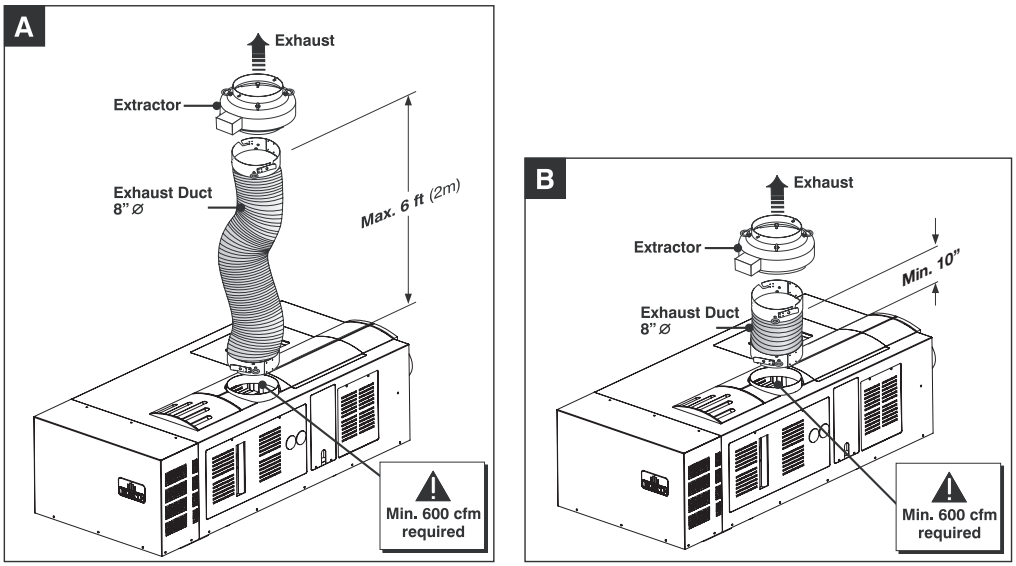

Figure 3-8. Extractor Fan Configurations

3.5 Installing the Optional CineWide Lens Mount

If you are installing a SC-1 with the optional CineWide with AutoScope system, proceed as follows to install the anamorphic lens mounting assembly (AutoScope lens motor).

Note *Do not install the CineWide lens yet, only the lens motor. You will install the CineWide lens after you install the projector and adjust the primary lens.*

➤ ***Raise the Feet***

Prior to installing the AutoScope lens motor, extend the four feet on the projector by 1/2 to 3/4 of an inch by rotating them counter-clockwise using a crescent wrench; see Figure 3-9. This will allow the projector to lie flat on the mounting surface with the AutoScope lens motor installed.

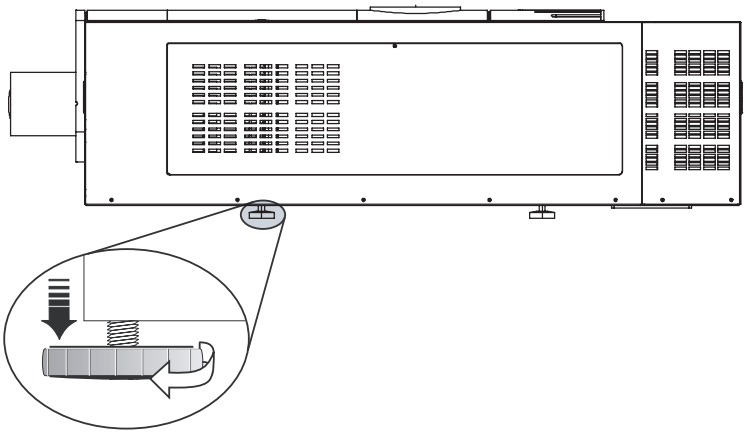

Figure 3-9. Adjusting the Feet

Attach Extension Bracket to Lens Motor ➤

Use the supplied hardware to attach the lens motor extension bracket to the top of the lens motor as shown in Figure 3-10.

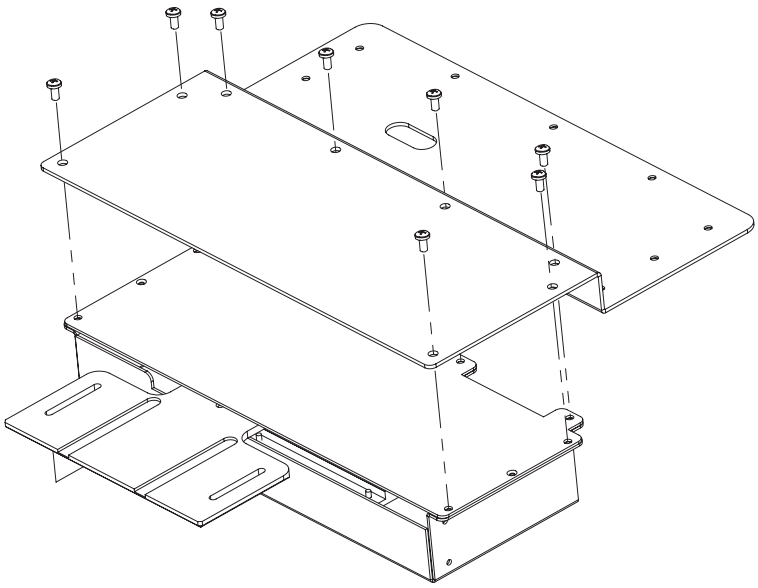

Figure 3-10. AutoScope Lens Motor with Extension Bracket

Install Anamorphic Lens Motor ➤

Note *The anamorphic lens mounting kit is partially pre-assembled at the factory – the AutoScope lens motor and lens mounting assemblies are both fully assembled.*

Line up the 10 mounting holes on the lens motor extension bracket with those on the bottom of the projector. Secure the motor to the projector with the 10 screws provided for this purpose. See Figure 3-11.

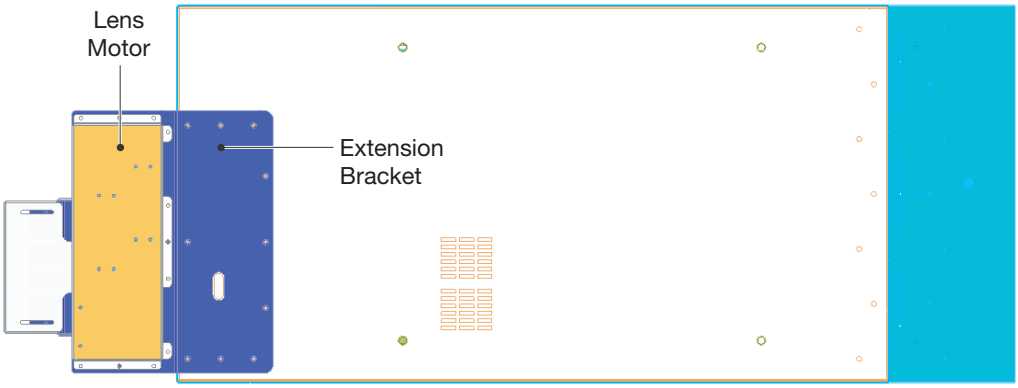

Figure 3-11. SC-1 with AutoScope Lens Motor (Bottom View)

Caution *DO NOT OVER-TIGHTEN THE SCREWS.*

3.6 Mounting the SC-1

Mount the SC-1 on a strong supporting structure or cart. Carts can be useful when moving a projector during a presentation or from site to site. If possible, lock the wheels when it's in position to prevent it from being moved during a presentation.

Take special care if using a mobile cart; avoid sudden stops, force and uneven surfaces that may cause the top-heavy cart to lurch and overturn. Make sure your mounting structure is reasonably level, then adjust one or more projector feet as necessary to fine-tune.

WARNING ***Do not attempt to invert or ceiling-mount the SC-1.***

➤ *Adjusting the Feet*

For installations on a floor or suitable supporting structure, a single projection head should rest firmly on its feet. To adjust the height and level of the projector, extend or retract the feet by rotating them using a crescent wrench; see Figure 3-9.

➤ *Tilting the Projector*

You can tilt the front end of the projector up or down as much as 15 degrees. Likewise, you can tilt it side-to-side up to 15 degrees. This limit ensures safe lamp operation and proper position of the liquid cooling reservoir in the projector. See Figure 3-12.

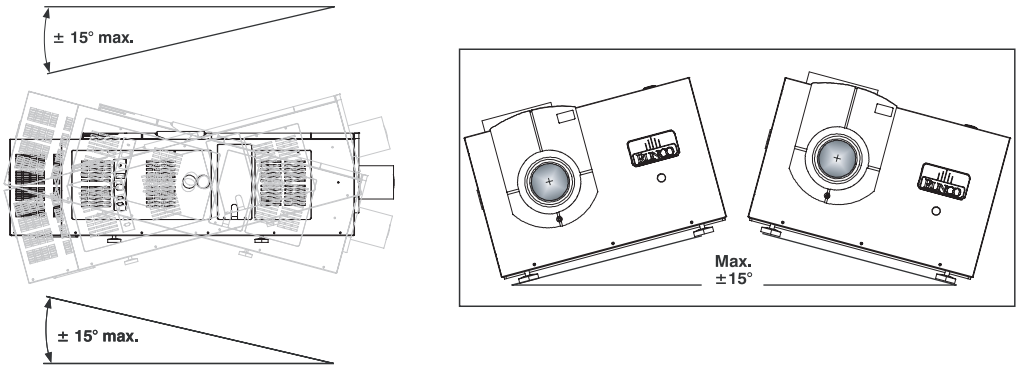

Figure 3-12. Tilt Ranges (Front-to-Back and Side-to-Side)

WARNING *Tilt only as shown, and only if absolutely necessary.*

3.7 Connections to the SC-1 and DHD Controller

Proceed as follows to connect the DHD Controller to the SC-1, your video sources, external controller(s) – if present – and AC power.

When connecting your equipment:

- Turn off all equipment before making any connections.
- Use the correct signal cables for each source.
- Ensure that the cables are securely connected. Tighten the thumbscrews on connectors that have them.

Input Panel Access ➤ To access the SC-1 input panel, remove the two screws holding the input panel cover in place.

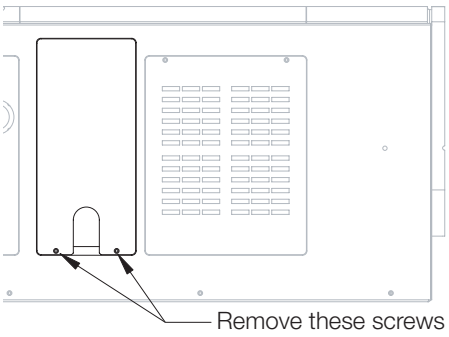

Connecting the DHD Controller to the SC-1 ➤ Connect the DVI, RGBHV and RS-232 outputs from the DHD Controller to the corresponding inputs on the SC-1; see Figure 3-13.

To minimize cable clutter, bundle the cables together and re-attach the input panel cover. Pass the cables through the opening at the bottom of the cover.

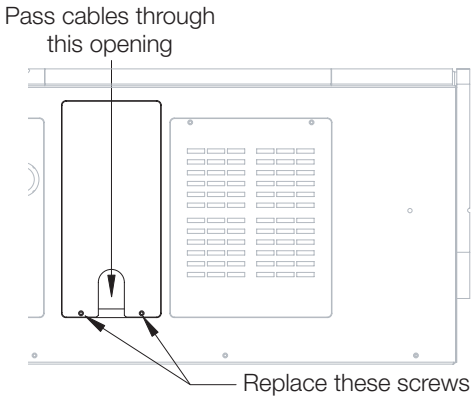

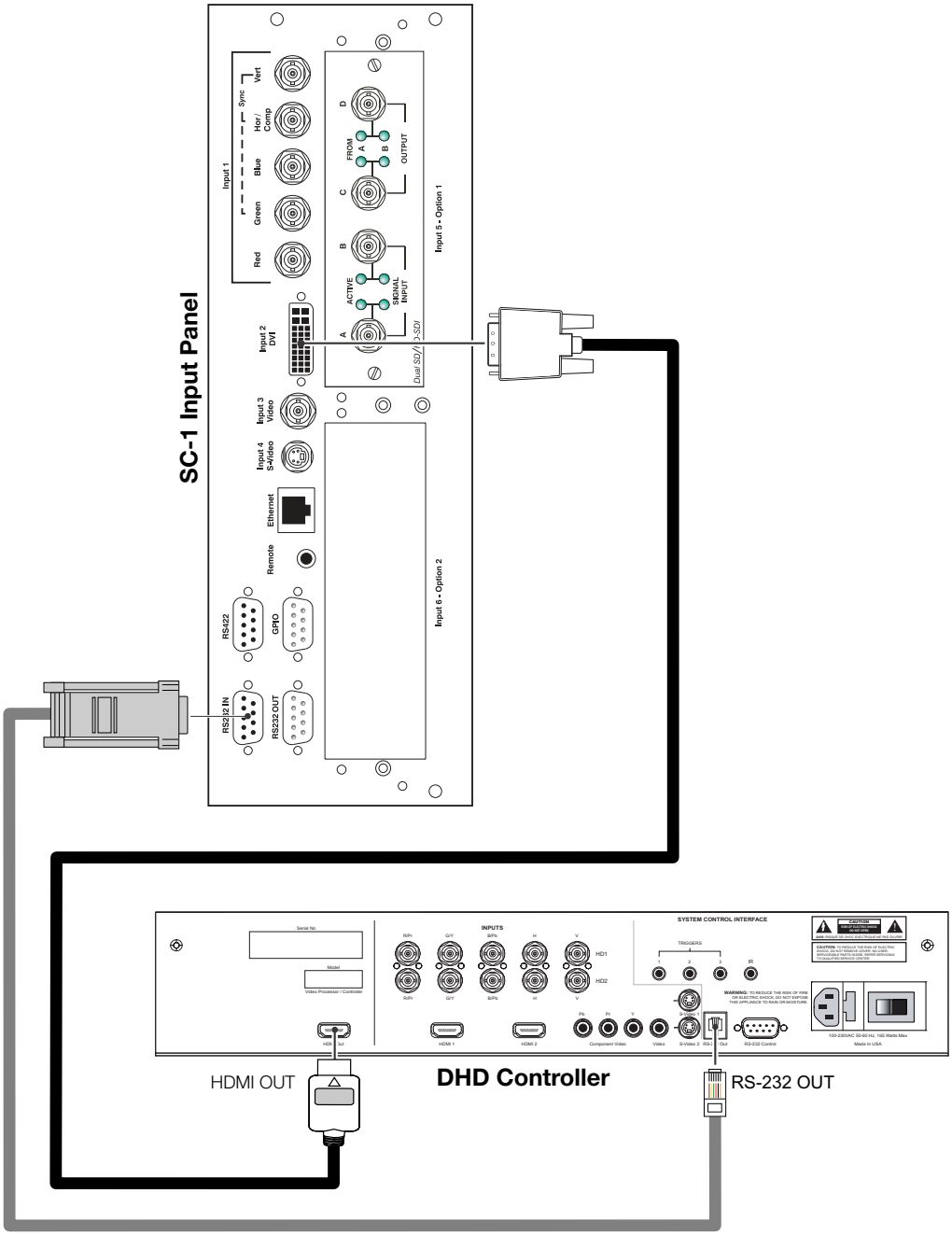

Figure 3-13. Connecting the SC-1 to the DHD Controller

Connecting Source Components to the DHD Controller

Connect your video sources to the DHD Controller as shown and described in the sections that follow.

HDMI Connections: See Figure 3-14.

Tip

Use the HDMI inputs whenever possible. This ensures the highest video quality because the signal is carried in the digital domain throughout the entire signal path, from source component output into the projector.

Note

You can also connect computers with DVI output to these inputs. However, accepted VESA standard resolutions are limited to VGA (640x480), SVGA (800x600), XGA (1024x768) and SXGA (1280x1024) at 60Hz refresh.

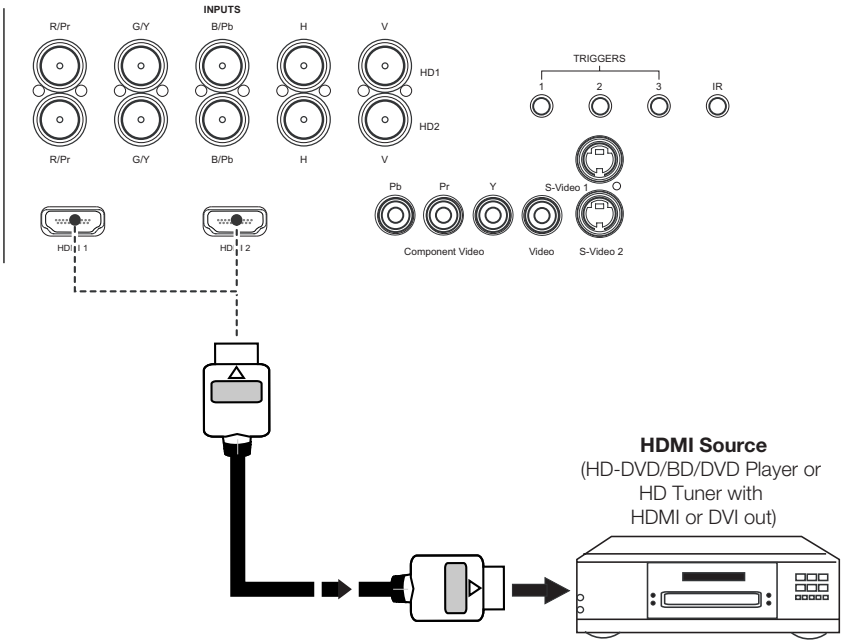

Figure 3-14. HDMI Source Connections

Digital (DTV) RGB or Component Video Connections: See Figure 3-15.

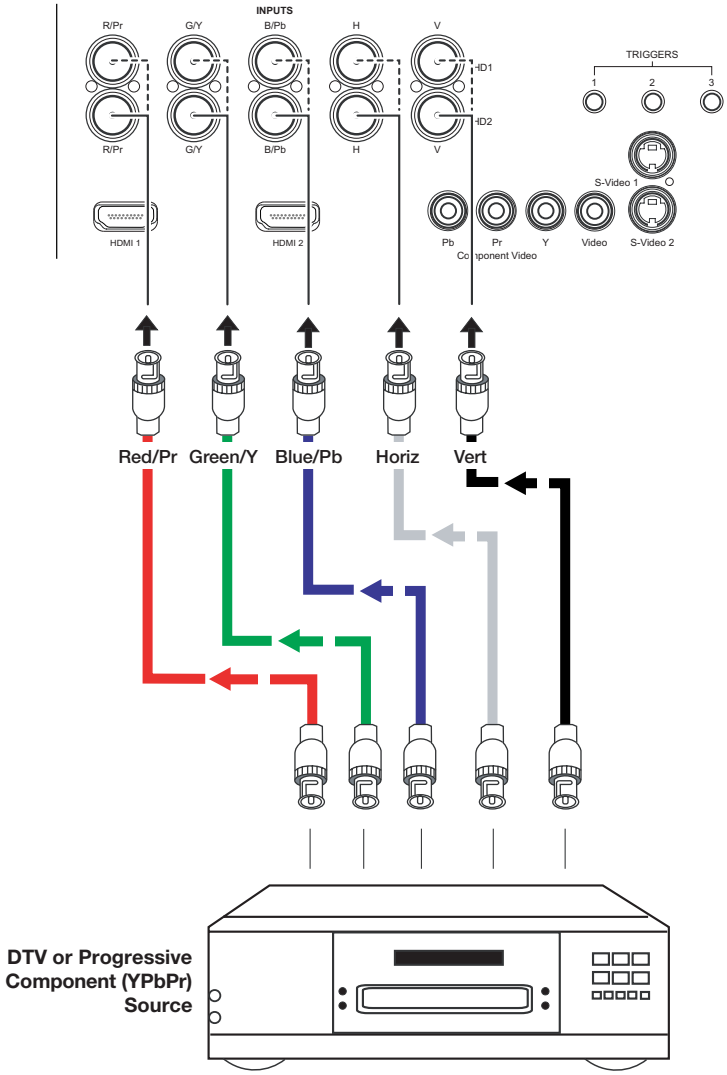

Figure 3-15. Digital (DTV) RGB or Component Video Connections

Analog (Computer) RGB Connections: See Figure 3-16.

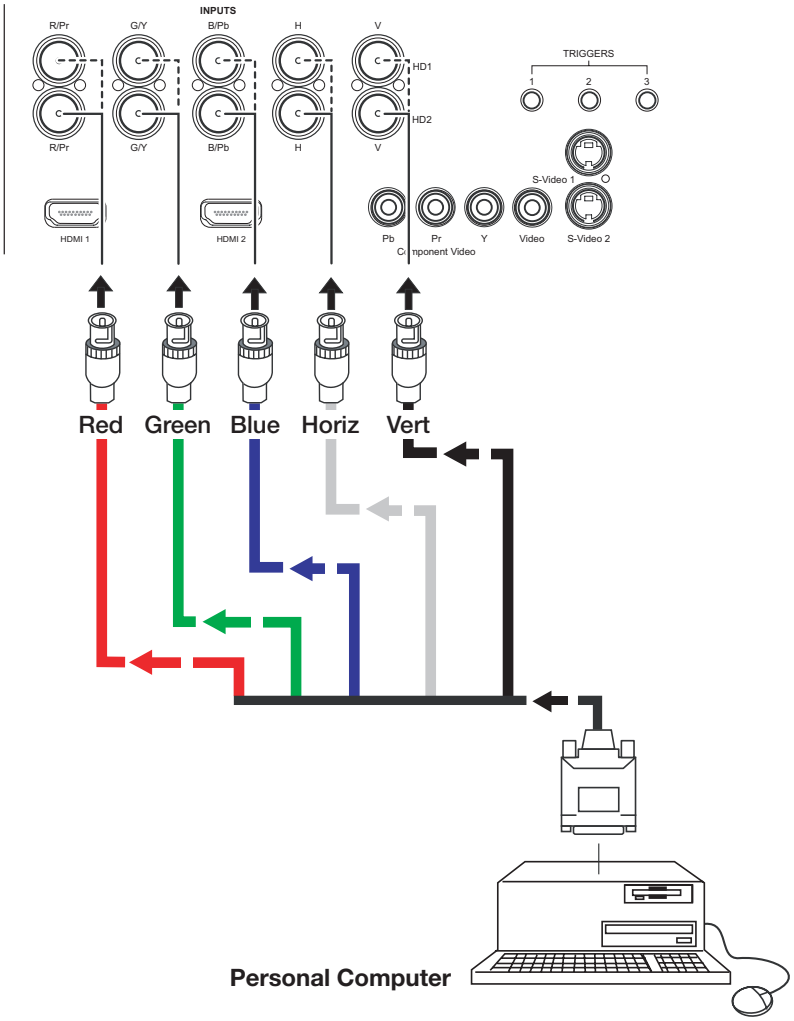

Figure 3-16. Analog RGB Connections

Composite/S-Video/Component Video Connections: See Figure 3-17.

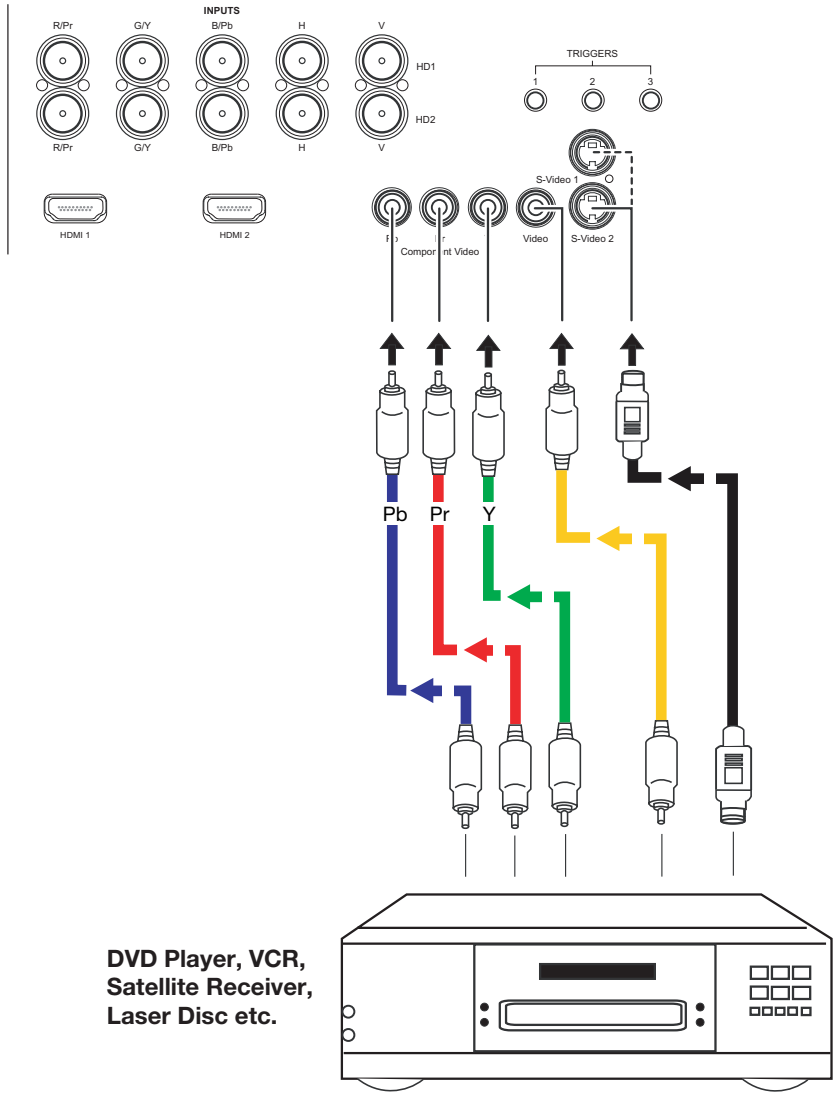

Figure 3-17. Composite, S-Video and Component Video Connections

RS-232 Controller Connection ➤

Use a straight-through, 9-pin RS-232 cable to connect a PC or home theater control/automation system (if present) to the RS-232 Control port on the DHD Controller; see Figure 3-18.

For more information about using this connection, refer to ***Serial Communications*** on page 101.

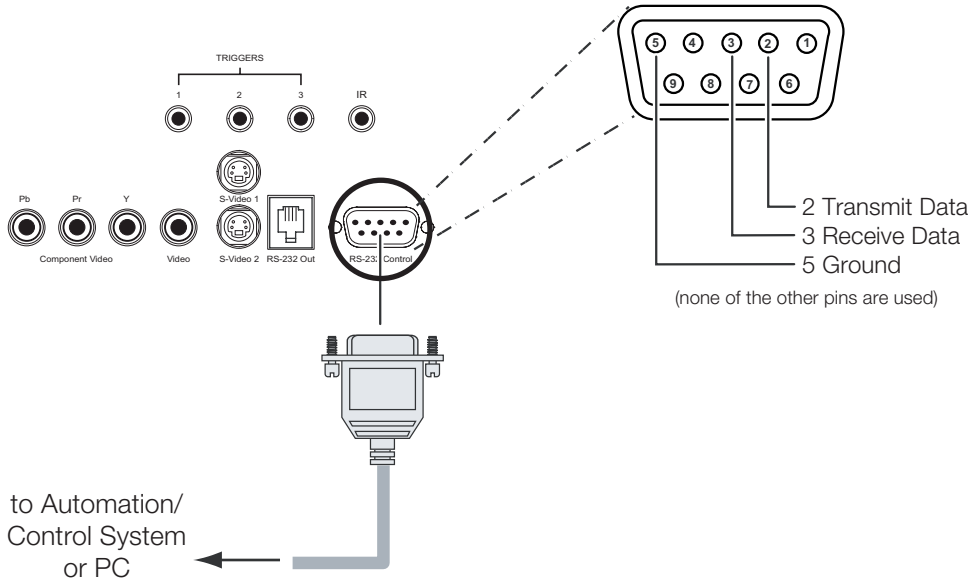

Figure 3-18. RS-232 Control System Connection

Connecting 12-volt Trigger Outputs to External Equipment ➤

If your SC-1 is equipped with a CineWide with AutoScope system, connect the AutoScope lens motor to a 12-volt trigger output on the DHD Controller; see Figure 3-19.

Similarly connect other 12-volt trigger-activated equipment (such as retractable screens or screen masks) to the other trigger outputs.

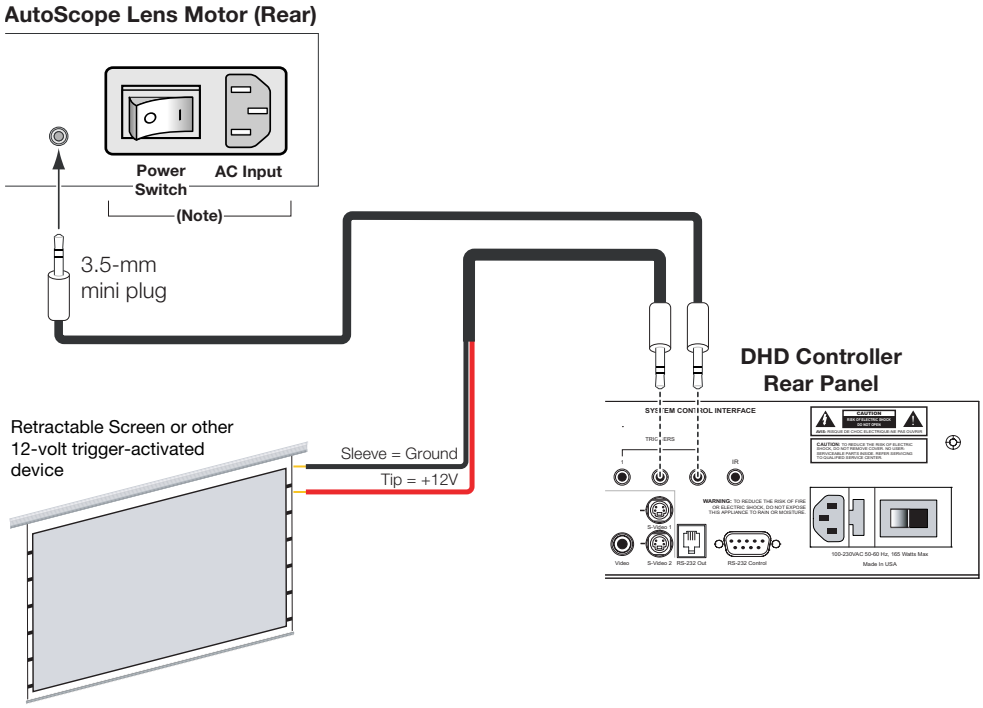

Note: *On some motors, the power switch and AC input are on the underside of the lens motor housing.*

Figure 3-19. Connecting 12-volt Trigger Outputs

➤ *Connecting an External IR Receiver to the DHD Controller*

If infrared signals from the remote control cannot reach the DHD Controller due to excessive distance or obstructions such as walls or cabinet doors, you can connect an external IR receiver to the DHD Controller to extend the range of the remote control. See Figure 3-20.

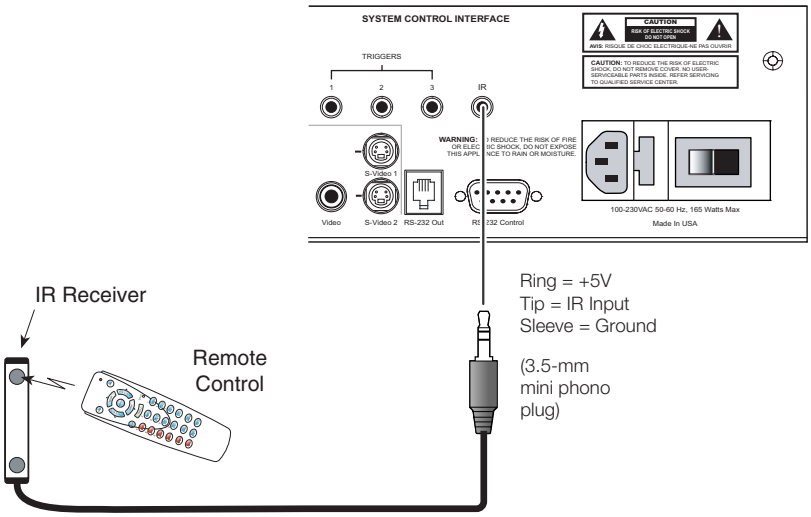

Figure 3-20. External IR Receiver Connection

Connecting an External Power Supply/Ballast to the Projection Head

The SC-1 is optionally available in a split-body configuration in which the power supply/ballast is separate from the projection head. This configuration is useful for installations where the projection area is too small to accommodate a single-body SC-1, or the 220-VAC source cannot be conveniently accessed from the projection area.

Note *If the power supply/ballast is internal to your SC-1 (as shown in Figure 2-1), continue with the next step,* ***Connecting to AC Power****.*

The external power supply/ballast connects to the SC-1 in two places: the lamp igniter connection panel and the AC/lamp control input panel, as shown in Figure 3-21.

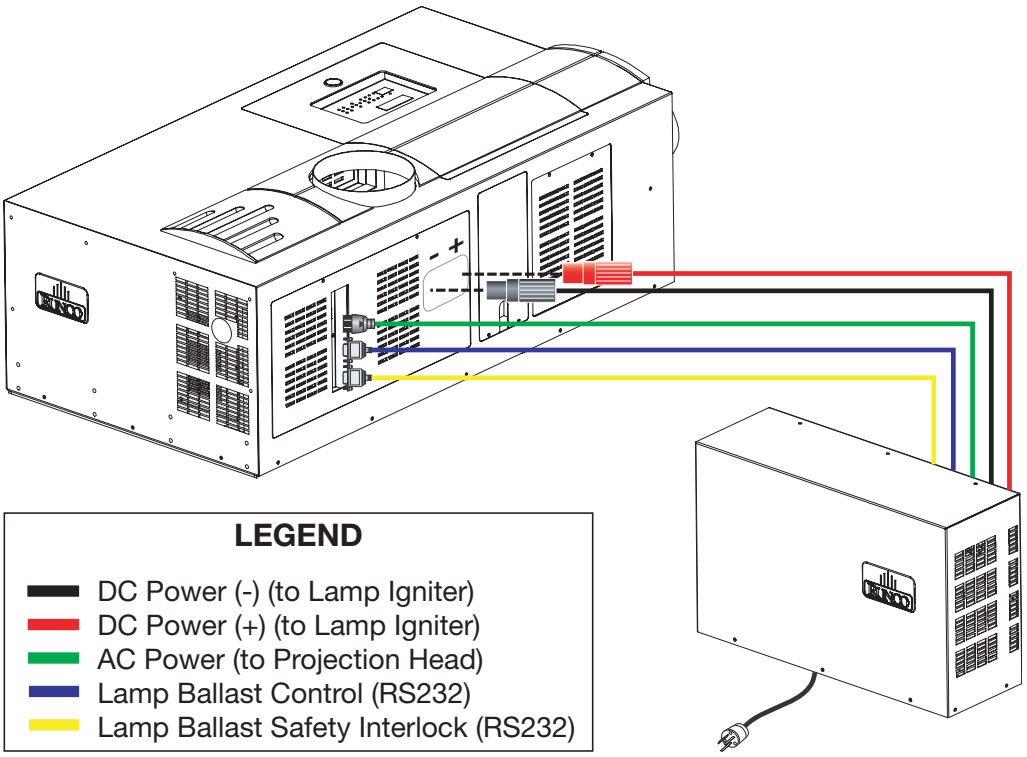

Figure 3-21. External Power Supply/Ballast Connection

Connecting the Ballast to the Lamp Igniter: The external power supply/ballast connects to the lamp igniter via two, high-voltage DC power cables with “twist-lock” connectors. The connectors are color-coded and of different genders for easy identification (red=positive; black=negative); see Figure 3-22.

To connect the external power supply/ballast to the igniter:

1. Connect the positive (red, male) DC power connector to the red (female) terminal on the lamp igniter connection panel. Insert the connector all the way in, then turn it 90 degrees clockwise to lock it.
2. Connect the negative (black, female) DC power connector to the black (male) terminal on the lamp igniter connection panel. Insert the connector all the way in, then turn it 90 degrees clockwise to lock it.

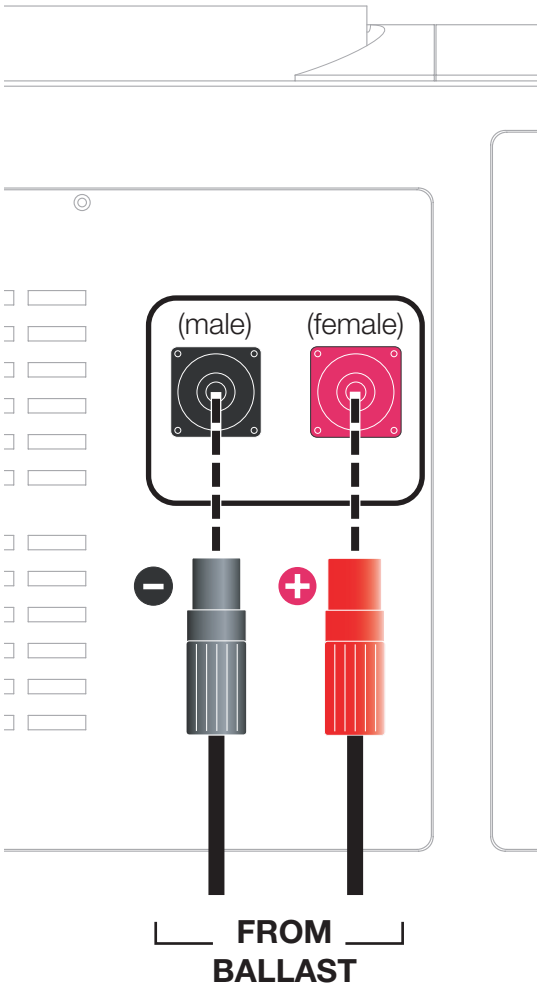

Figure 3-22. SC-1 Lamp Igniter Connection Panel

Connecting the Ballast to the AC/Lamp Control Input Panel: Connect the AC power, lamp ballast control cable and lamp ballast safety interlock cable to the AC/lamp control input panel as shown in Figure 3-23.

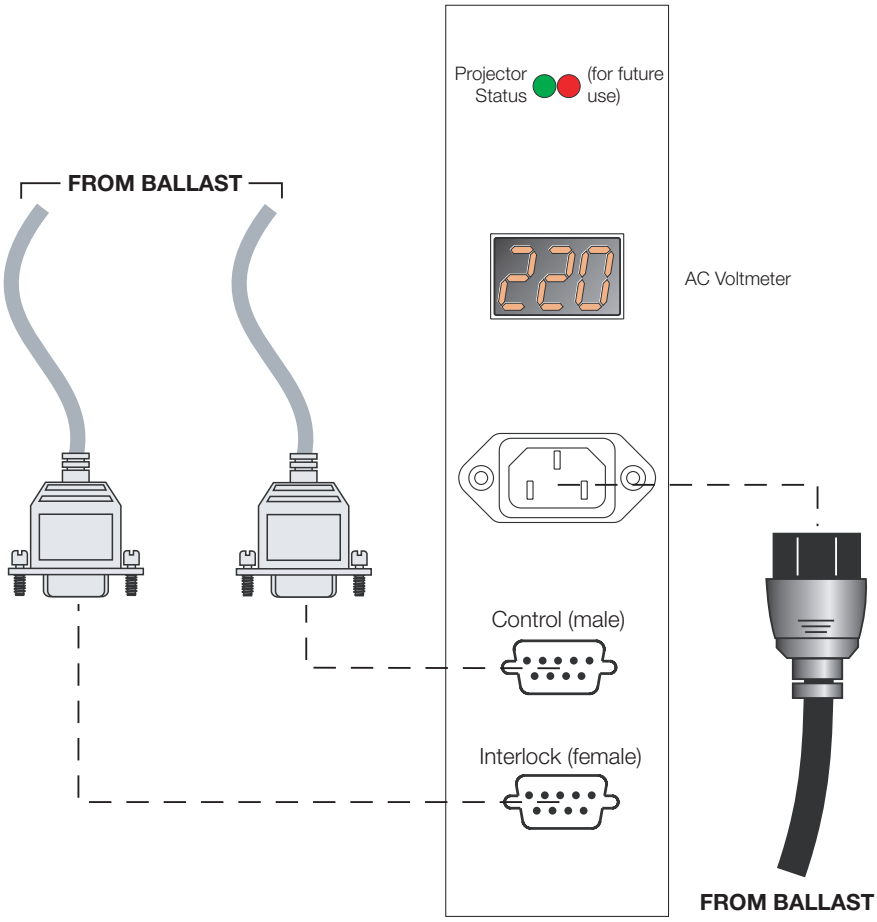

Figure 3-23. AC/Lamp Control Input Panel

The Projector Status LED indicates the current operating state of the projector, as follows:

- **OFF:** Projection head is unplugged.
- **Amber:** Head is plugged in but turned off.
- **Green:** Normal operation.
- **Red:** Error preventing normal operation.

During operation, the AC voltmeter displays the number of AC volts reaching the projector. Monitor this and make sure the display reads within the acceptable nominal AC range (200-240) at all times. If the window is dark, this indicates that the projection head is either unplugged or not powered up, or that inadequate, excessive or faulty AC has automatically “tripped” (opened) the ballast breaker and caused a shutdown.

➤ Connecting to AC Power

The SC-1 system includes two (2) AC power cords (one each for the DHD Controller and projector).

DHD Controller: Plug the female end of one power cord into the AC receptacle on the rear of the DHD Controller. Connect the other end to your AC power source (100 to 240 VAC).

Projector: Similarly connect the SC-1 to a nearby AC outlet. The input voltage must be between 200 and 240 VAC.

Caution

*The SC-1 requires a **dedicated**, 220-VAC/30A circuit. Connect **only** the SC-1 to this circuit.*

The LED status window displays an active pattern of segments to indicate the projector is changing its state from powered down to standby. At this point, the projection head is in a type of “standby” mode only; the light engine compartment fans are running but the rest of the projection head is off. “--” appears in the display when the projector is ready to be turned on.

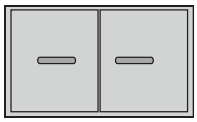

AutoScope Lens Motor: With AutoScope-equipped projectors, a third power cord is provided for the lens motor. Plug the female end of the AC power cord into the AC input on the rear of the lens motor assembly (see Figure 3-19). Connect the other end to a 110 VAC power source.

Caution

*The input voltage to the AutoScope lens motor must be between 100 and 120 VAC. **Do not connect the AutoScope lens motor to a 200-240 VAC power source!***

3.8 Turning on the Power

Before powering up the projector and igniting the lamp, you must define in memory which size lamp is installed, otherwise you risk severely over-driving or under-driving a lamp.

WARNING *Explosion hazard. DO NOT turn the projector on until you have defined the lamp size.*

Defining the Installed Lamp Size ➤

1. Press **MENU**. The Status Display at the top of the projector will show a “Lamp Size” of 2000, 3000, 4500 or 6000 watts. See Figure 3-24.

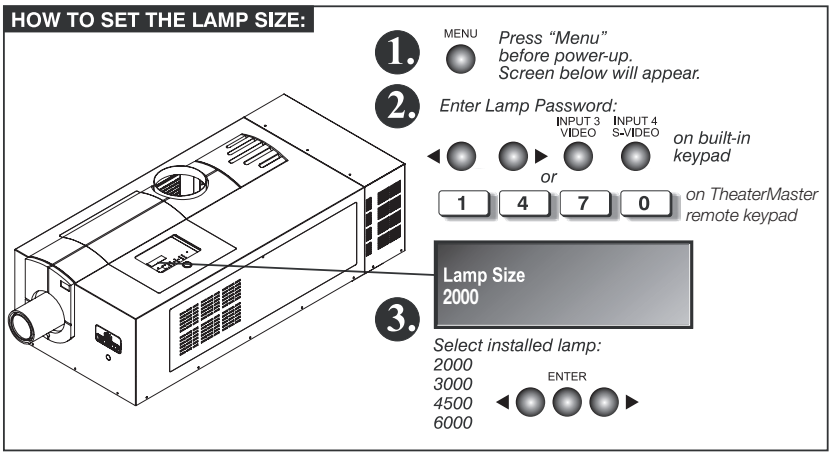

Note: *You must enter a password unless the “Enable Password” service option has been turned off.*

Figure 3-24. Checking or Setting Lamp Size

2. Enter the Lamp Password or the Runco service password. (You must enter a password unless the “Enable Password” service option has been turned off.)
3. Press ◀ or ▶ to select 2000, if a different lamp size is shown.
4. When the Status Display shows the correct lamp type, you can turn on the projector and lamp.

Note *The Lamp Size can also be changed in the Service menu (Service password required) if the projector is running, but the change will not take effect until the next power-up. Whenever possible, define the lamp size before igniting the lamp.*

➤ *Power-Up Sequence*

1. Turn on your source components.
2. Turn on the main power switch at the rear of the DHD Controller.
3. If this is an AutoScope-equipped projector, turn on the main power switch on the AutoScope lens motor. The lens motor power switch is located next to the AC input (see Figure 3-19).
4. Press the **ON** button on the remote control – or the **POWER** button on the DHD Controller front panel – to turn on the system. The vacuum fluorescent display on the DHD Controller front panel briefly displays “Starting Display.”

   The LED status window at the rear of the projector displays an active pattern of segments to indicate that it is changing its state from “standby” to “on.”
5. When the projector has completed its initialization and is ready for use, “On” appears in the projector LED status window.

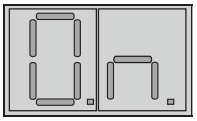

   The fluorescent display on the DHD Controller indicates the active source, signal format (NTSC or PAL), input resolution and aspect ratio; for example:

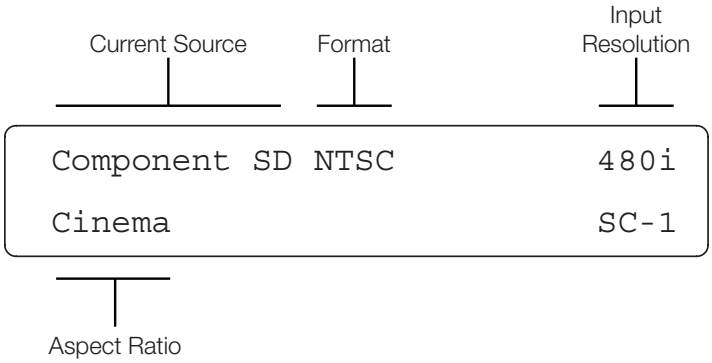

3.9 Maximizing Light Output

Upon powering up the projector with a newly installed/replaced lamp, use the LampLOC feature of the SC-1 to adjust the lamp position to help ensure optimized operation as well as peak brightness at the screen. You do not need to display an image on-screen to do this; however, the lamp must be on and the shutter open.

To perform the LampLOC adjustment:

1. Press **MENU** on the built-in keypad or TheaterMaster remote control to display the Main Menu.
2. Select **Lamp** from the Main menu.
3. Select **LampLOC** from the Lamp menu (see Figure 3-25).

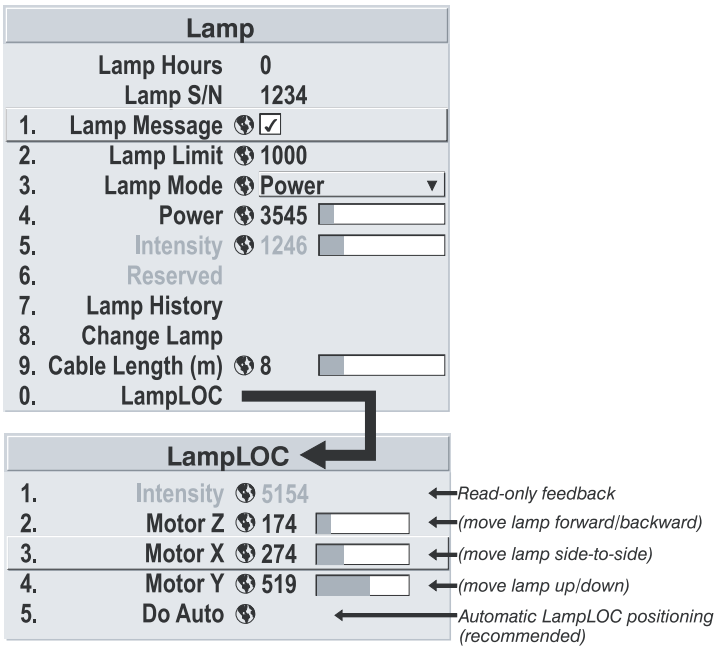

Figure 3-25. Using LampLOC to Align the Lamp

4. For best results in most applications, select **Do Auto**. The motorized lamp adjustments will begin and, in conjunction with an internal light sensor, will take a minute or two to position the lamp for optimized brightness. If desired, you can operate the motors individually and use the Intensity reading at the top of the menu for feedback.

Once you have done this LampLOC adjustment, the lamp will be well-centered and distanced correctly from the remainder of the illumination system. You can re-adjust it as needed at any time.

3.10 Adjusting the Picture Orientation

By default, the SC-1 is configured for a “floor/front” installation, in which the projector is installed upright and in front of the screen. If it is installed behind the screen, you must switch to a “floor/rear” picture orientation. To do this:

1. On the DHD Controller, press **MENU** and enter the Service Menu passcode.
2. Select **Service** from the Main Menu.
3. Select **Display Device** from the Service Menu.
4. Select **Configure** from the Display Device menu, then select **Installation**.
5. Choose Floor/Rear.

3.11 Primary Lens Adjustments

This initial optical alignment procedure is the foundation for optimizing your displays, ensuring that images reflected from the DMDs are parallel to and well-centered with both the lens and screen.

Before you begin, properly position the projector relative to the screen (refer to ***Vertical and Horizontal Position*** on page 22).

Double-check projector leveling (refer to ***Adjusting the Feet*** on page 31) so that the top edge of the image is parallel to the top edge of the screen.

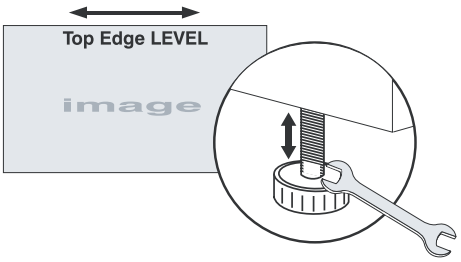

Focus ➤ To focus the projected image:

1. Display a good test pattern appropriate for analyzing image focus and geometry, such as a single crosshair centered across the image.
2. Rotate the knob as needed to produce a tightly-focused image.

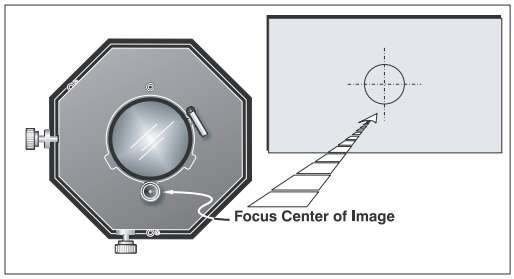

Zoom ➤ With the projector in its permanent location, turn the lens zoom ring on the primary lens to enlarge or shrink the image in each direction as necessary.

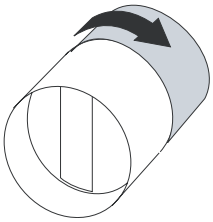

Horizontal and Vertical Lens Shift ➤ Using a 4.0-mm hex wrench, turn the horizontal offset knob as necessary so that the image fills the screen area with no keystoning.

To access the vertical offset knob from the front of the projector, remove the round, black plastic cover just below the lens; see Figure 3-26. Turn the knob by hand to adjust the vertical image position. For best results, avoid extreme offsets characterized by corner vignettes on a white test pattern.

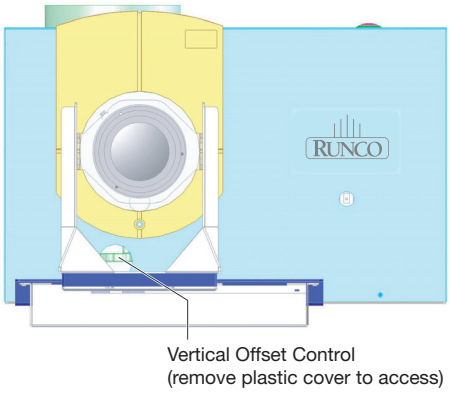

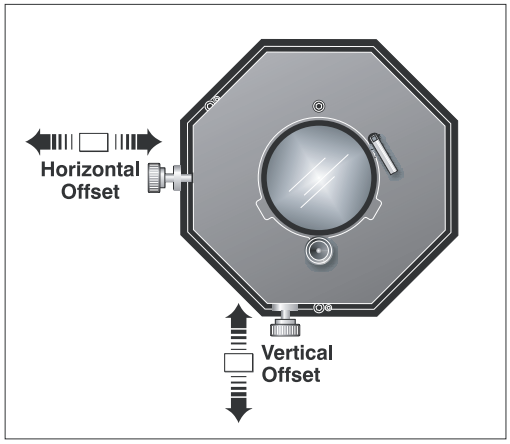

Figure 3-26. Horizontal and Vertical Lens Shift Controls

For more vertical offset range, you can tilt the projector to compensate for significant differences in screen and lens height; refer to ***Tilting the Projector*** on page 31.

3.12 Installing and Adjusting the CineWide Anamorphic Lens

If you are installing a CineWide-equipped projector, proceed as follows to install and adjust the anamorphic lens.

Note ***It is extremely important that the primary lens is properly adjusted before you install the anamorphic lens. Ensure that the image from the primary lens is perfectly centered on the screen.***

The SC-1 Anamorphic lens mount kit consists of everything shown in Figure 3-27. Some components shipped with your projector may differ slightly from what is shown in these instructions. If any items are missing or damaged, please contact your Runco dealer or Runco Customer Service at (800) 23-RUNCO.

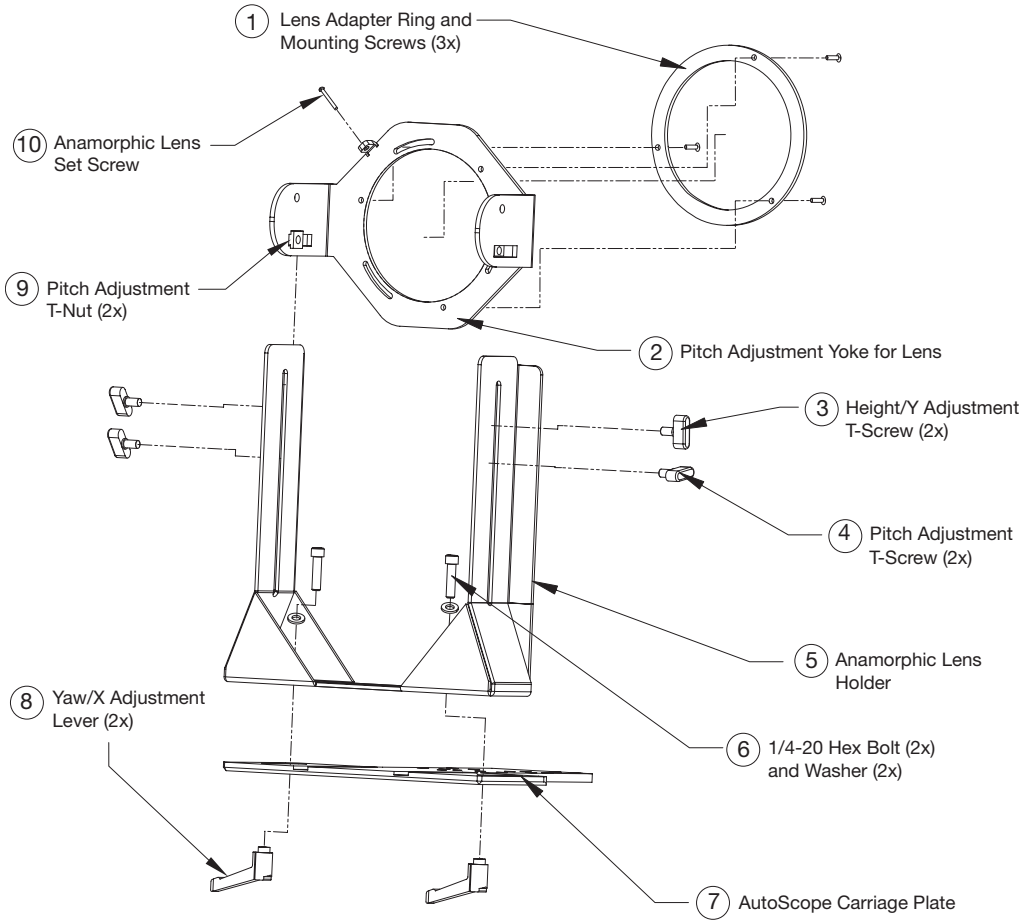

Figure 3-27. Anamorphic Lens Mouning Assembly - Exploded View

Attach Lens Mounting Assembly to Lens Motor Carriage Plate

1. Remove the two Yaw/X Adjustment Levers (item #8) from the bottom of the Anamorphic Lens Holder (item #5).
2. Place the Anamorphic Lens Holder on top of the AutoScope Carriage Plate (item #7). Position the bracket so that the long slot at the bottom of the lens holder is perpendicular to the corresponding slots on the carriage plate.

3. Secure the Anamorphic Lens Holder to the plate using the Hex Bolts/Washers (item #6) and Yaw/X Adjustment Levers that you removed in Step 1.
4. Use the Lens Mounting Screws to attach the Lens Adapter Ring (item #1) to the Pitch Adjustment Yoke (item #2); see Figure 3-28. (Use the round, threaded holes on the yoke.)
5. Use the Height/Y Adjustment T-Screws (item #3), Pitch Adjustment T-Screws (item #4) and T-Nuts (item #9) to attach the Pitch Adjustment Yoke and Lens Adapter Ring to the Anamorphic Lens Holder. **The Yoke should be as close to the primary lens as possible.**
6. Attach the lens to the Lens Adapter Ring by threading it clockwise.

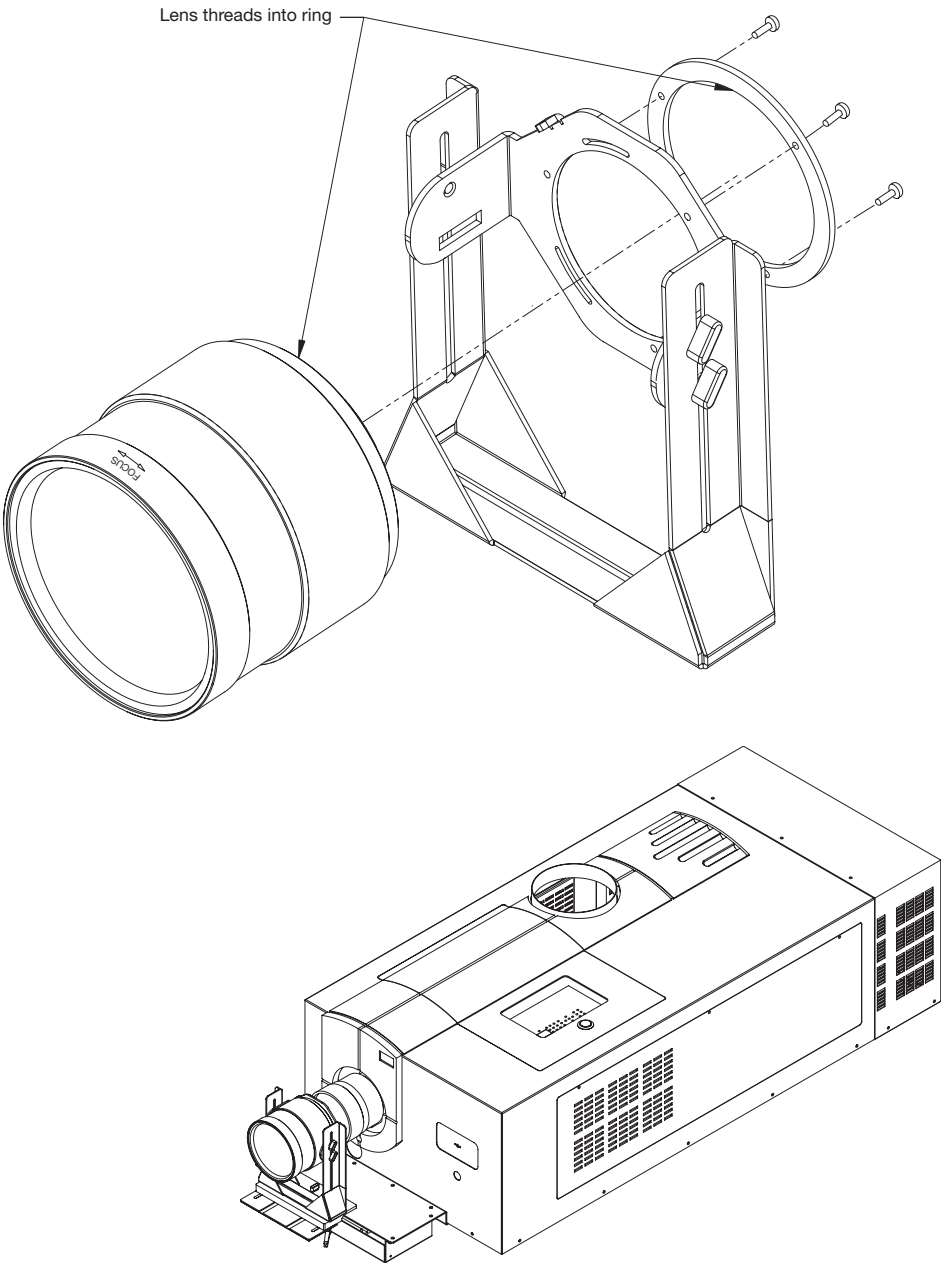

Figure 3-28. Attaching the Anamorphic Lens to the Lens Ring

◄ *Configure Lens Motor Trigger*

CineWide with AutoScope maintains constant image height independent of the aspect ratio, while using the full display resolution of the projector. It accomplishes this by moving the anamorphic lens in front of the primary lens when widescreen material is being viewed. When the viewer transitions back to 16:9 or 4:3 source material, the anamorphic lens moves out of the light path.

To configure the lens motor trigger on the DHD Controller for proper AutoScope operation:

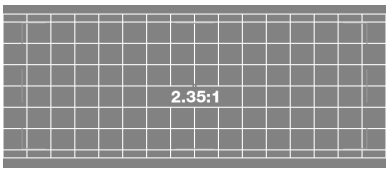

1. Project a 2.35:1 aspect ratio test pattern or other image on the screen.
2. Press **MENU** on the DHD Controller remote control and enter the Service menu passcode.
3. Select **Service** from the Main menu.
4. Select **Triggers** from the Service menu.
5. Assign the trigger output to which the lens motor is connected to the Cinema and Virtual Cinema aspect ratios. This enables the lens motor to move the anamorphic lens into position (in front of the primary lens) when either aspect ratio is selected.
6. To save the trigger settings, press ▼ repeatedly to highlight “Save.” Then, press **ENTER**.
7. Select the Cinema or Virtual Cinema aspect ratio to move the anamorphic lens into position, if it isn’t already. To do this, press **CINEMA** or **SVC** on the DHD Controller remote control (Figure 2-6), or press ▲ or ▼ repeatedly with no menus visible on-screen.

◄ *Adjust the Anamorphic Lens*

Horizontal Position (X) Adjustment:

1. Project a white field on the screen.
2. Loosen the Yaw/X-Adjustment Levers underneath the lens.
3. Slowly move the anamorphic lens into place so that there are no shadows on either side of the screen:

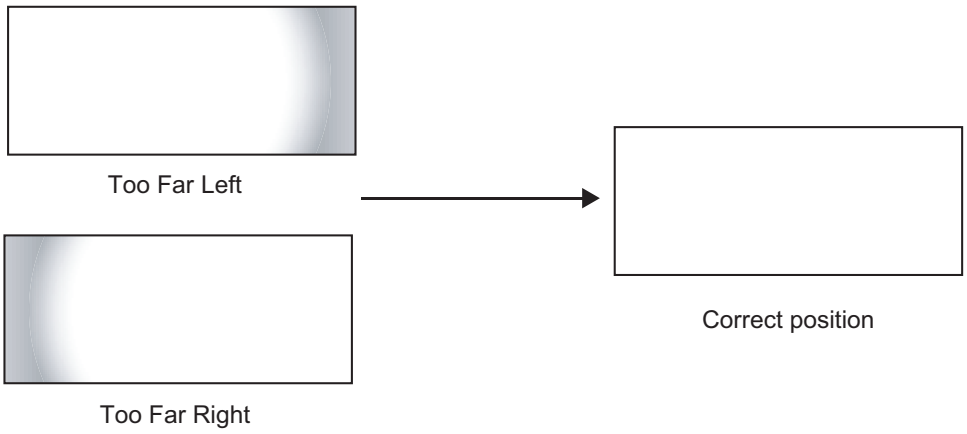

4. When the horizontal position is properly set, tighten the Yaw/X-Adjustment Levers to secure the lens in place.

Adjusting the Height (Y): With the white field still on-screen, loosen the Height/Y Adjustment T-Screws on either side of the lens. Then, slowly move the anamorphic lens into place so that there are no shadows on the top or bottom of the screen:

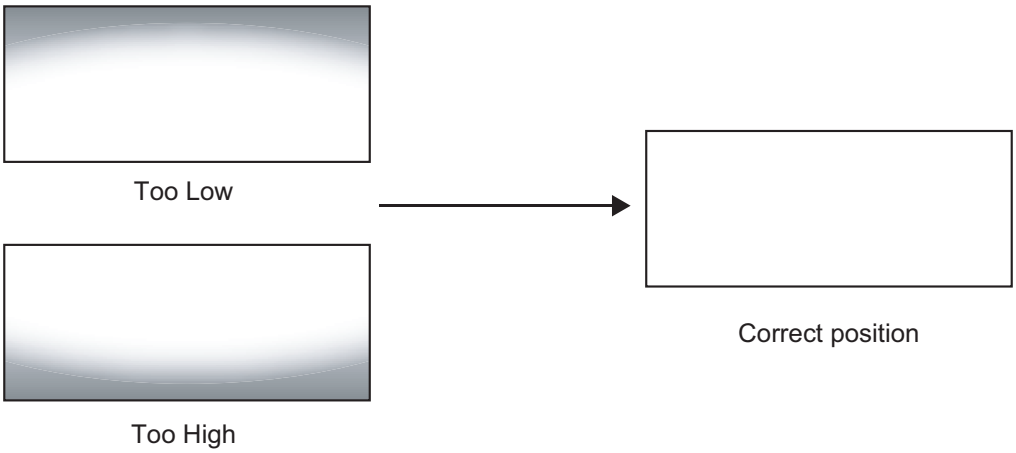

When the height is properly set, tighten the Height Adjustment T-Screws to secure the lens in place.

Pitch (Angle): Next, angle the lens to even out any top-to-bottom pincushion distortion. To do this, loosen the Pitch Adjustment T-Screws (directly below the Height/Y Adjustment T-Screws) on either side of the lens to allow it to pivot freely. Then, adjust the anamorphic lens angle so that the projected image is rectangular:

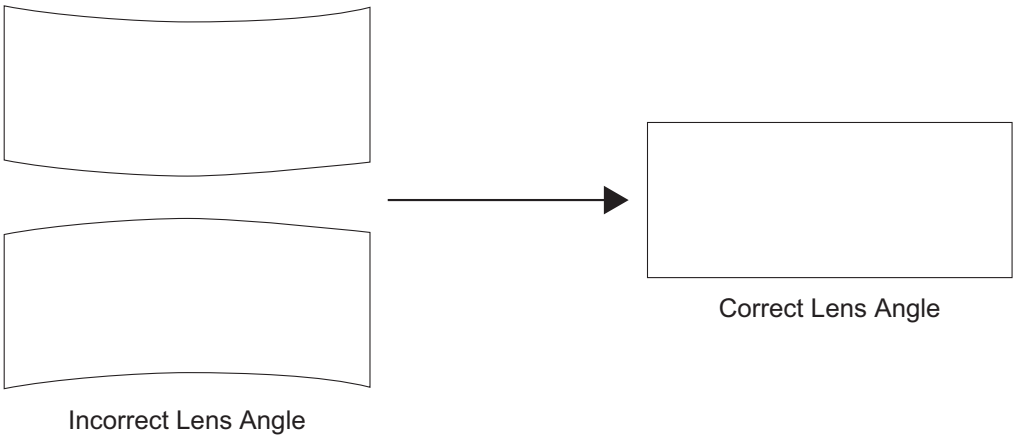

The anamorphic lens will almost always be angled with respect to the projector; this is normal.

Once the proper lens angle has been set, firmly tighten the Pitch Adjustment T-Screws to secure the lens in place.

Note

There may be some pincushion distortion even after the lens is properly adjusted, especially at shorter throw distances. If this is the case, Runco recommends that you slightly over-scan the image into the screen frame area to mask the distortion.

Adjusting the Yaw: Loosen the Yaw/X-Adjustment Levers to allow the lens to pivot freely from side to side. Then, angle the lens to even out any left-right pincushion distortion:

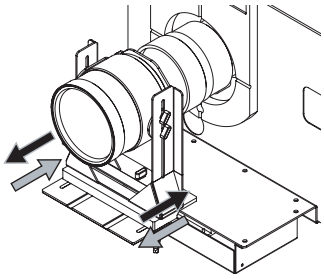

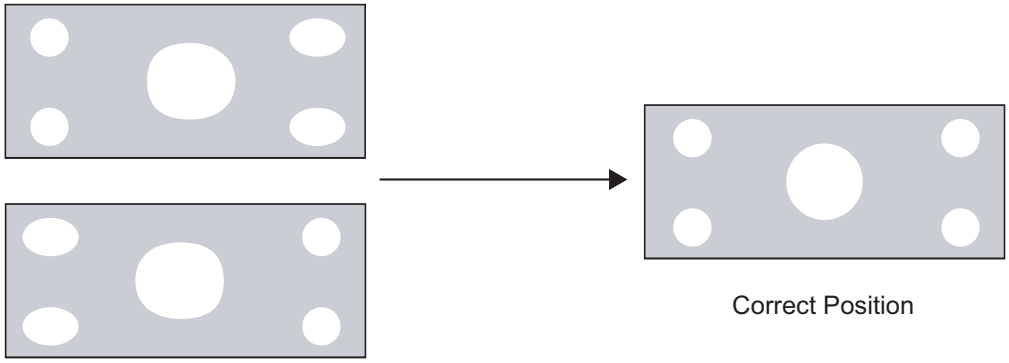

Once the proper lens angle has been set, firmly tighten the Yaw/X-Adjustment Levers to secure the lens in place.

Adjusting the Geometry:

1. Input an anamorphic cross-hatch test pattern to the DHD Controller.
2. Unscrew the Anamorphic Lens just enough to allow it to rotate freely.
3. Grasp the lens by the center ring and rotate the lens until the image is properly anamorphic:

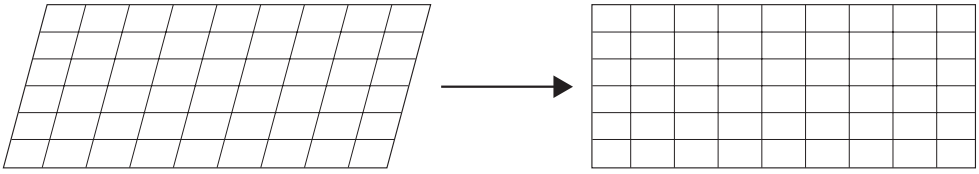

4. When the image geometry appears correct, tighten the Anamorphic Lens Set Screw (item #10) to secure the lens in place. (When viewed from the front, the rear opening on the anamorphic lens should appear as a tall, narrow oval.)

Focus: Finally, rotate the Focus Ring on the anamorphic lens to fine-tune the optical focus.

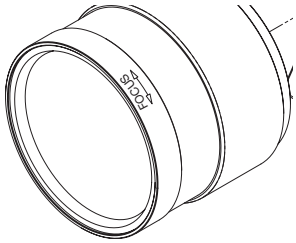

3.13 Calibrating Projector Input 2 (DVI)

After you have installed and adjusted the projector and lens (or lenses), you are ready to begin calibrating the DVI input (Input 2) to the SC-1.

Note

Runco calibrates both the SC-1 and DHD Controller at the factory for optimum performance in most typical home cinema environments, before the system ships.

Carefully assess the displayed image quality before proceeding with calibration. In most cases, it is not necessary to calibrate the projector inputs, as the DHD Controller gives you as much control as you will need over the image quality.

Only ISF-certified installation technicians should attempt the calibration procedures described here, and ONLY if absolutely necessary to accommodate an atypical installation.

To perform the calibration, you will use the SC-1 built-in keypad (Figure 2-3) or TheaterMaster Remote Control, shown in Figure 3-29 and described on the pages that follow. Once you have completed the projector input calibration, the end user can use the DHD Controller Remote Control (Figure 2-6) to adjust input image quality, change aspect ratios, switch between sources and more. (The exception to this rule is when sources are connected directly to the projector. Although this is technically possible, Runco advises against this.)

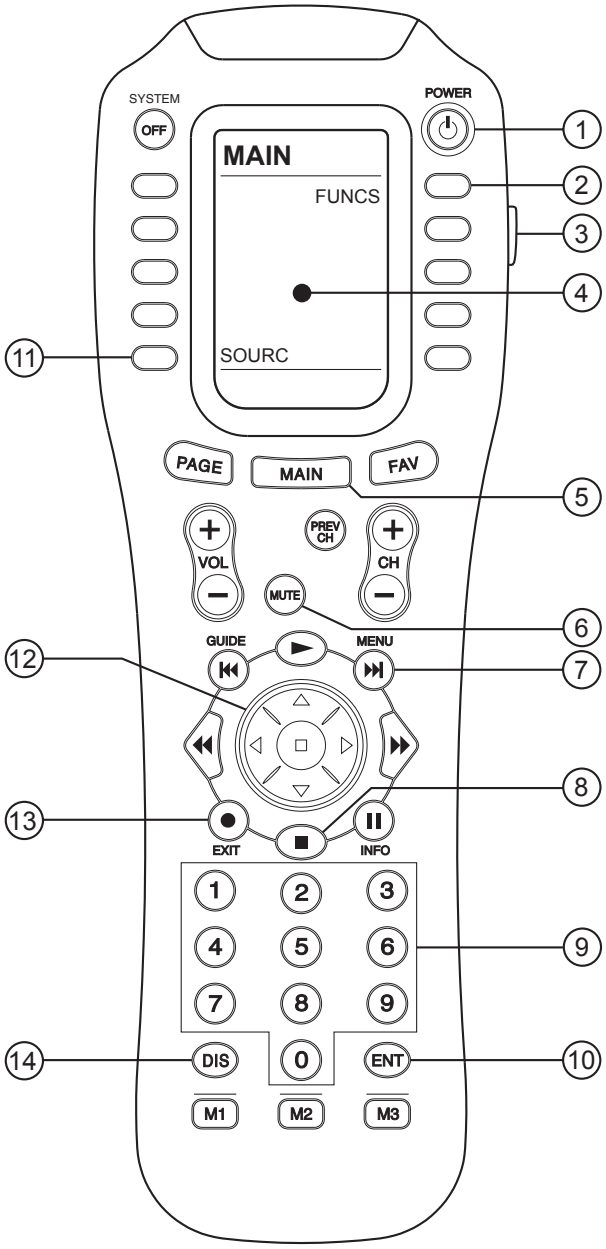

Figure 3-29. TheaterMaster Remote Control for SC-1

TheaterMaster Remote Control Functions ➤

1. **POWER Button**
   Hold this button down for 1-2 seconds to turn on or off the projector.
2. **FUNCS Button**
   This button brings you to a sub-page in which you can access the projector's internal test patterns, view help text, auto-calibrate the projector and perform various other functions.
3. **BACKLIGHT Button**
   Lights the LCD display and buttons for use in a dark room.
4. **LCD Display**
   Displays currently-selected LCD Menu page.
5. **MAIN Button**
   Brings up the Main LCD Menu page.
6. **MUTE Button**
   Activates the Shutter control on the projector. Press and hold for 1-2 seconds to activate the shutter, and press and hold again to de-activate the shutter.
7. **MENU Button**
   Displays or hides the on-screen projector menu.
8. **ENTER Button**
   Though it has a 'stop' icon (and can be programmed as such for other sources), this button serves as an **ENTER** button for the projector when navigating through the menus.
9. **Numeric Keypad**
   Used for entering numeric values or passcodes. Also allows direct selection of numbered on-screen menu items.
10. **ENTER Button**
    Same as Item 8.
11. **SOURC Button**
    Brings up the projector's source selection LCD Menu.
12. **Directional Keypad**
    The directional keypad (large, black button just above the numeric keypad) behaves similarly to a joystick. Press the left or right side of this button to change a slidebar value or to select a different option within a pull-down list without having to first scroll through options. Press the top or bottom of this button to navigate within a menu, pull-down list or text box.
13. **EXIT Button**
    When in the menu structure, the **EXIT** button brings the menu back one page or cancels the current function.
14. **FUNCTION Button**
    Though labeled **DIS**, this button has been programmed as a "function" button used in several menu items. (You can also use the **FUNCN** button in the Functions LCD Menu.)

◄ *Navigating the Projector Menus*

Most of the controls for the projector are accessed from within the projector's menu system. There are several groups of related functions, with each group selectable from the Main Menu. Press **MENU** on the built-in keypad or TheaterMaster remote to display this menu.

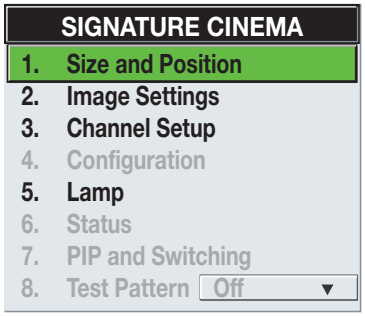

To select a sub-menu using the remote keypad, do one of the following:

- Press the number key corresponding to the function menu you wish to access, such as **2** for the Image Settings menu.
- Press ▲ or ▼ on the directional keypad to highlight the desired option, then press **ENTER** or ▶.

The corresponding function menu or pull-down list of further options will then appear.

You navigate the function menus in a similar manner: enter a menu option number for any numbered option, or use the ▲ and ▼ keys to highlight the desired option, then press **ENTER**. Extra long menus have a scroll bar on the right; use the arrow keys to access the remainder of the menu. Locked items or items that do not pertain to the current action or condition appear dimmed and cannot be selected.

Note

1. *If there is no signal present, all source-dependent adjustments are disabled.*
2. *After 15 minutes of inactivity, the projector leaves the menu system and returns to the presentation.*
3. *The Status menu is read-only.*

When finished with a function menu, do one of the following:

- Press **EXIT** to return to the previous screen.
- Press **MENU** to leave the menu system and return to the presentation.

To set up the SC-1 for use with the DHD Controller, you will use the **Channel Setup, Size and Position**, **Image Settings** and **Lamp** menus.

◄ *Channel Setup*

The projector stores and automatically recalls up to 50 different channels (source setups) for a variety of inputs. This memory feature allows you to define and conveniently use a wide variety of customized setups rather than having to repeatedly re-configure the projector for different presentations. Each projector input can have several different channels associated with it.

All available channels are listed in the Channel Setup menu (Figure 3-30), which describes how each channel can be accessed and which serves as the gateway for editing, copying and deleting channels.

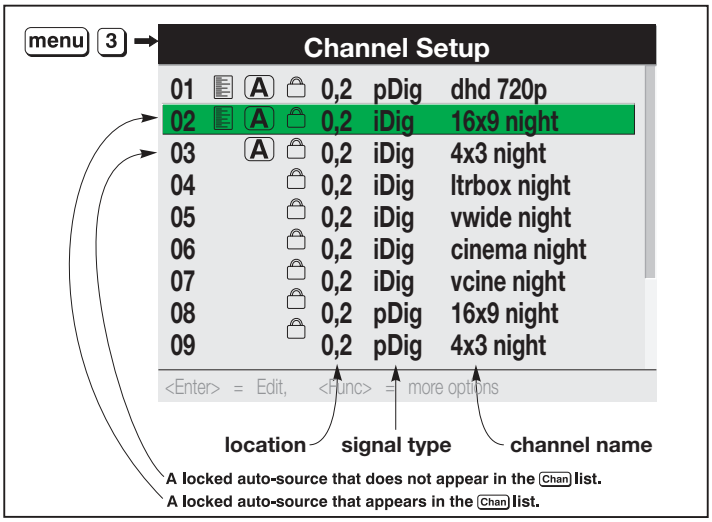

Figure 3-30. Channel Setup Menu

To display the Channel Setup menu, press **3** or highlight **Channel Setup** and press **ENTER** or ▶. The Channel Setup menu appears with the active channel highlighted.

What Appears in the Channel Setup Menu: This menu lists all channels defined so far and indicates where they are connected on the input panel.

The far-left column lists channel numbers currently defined. If a channel has been assigned a name, that name appears in the far-right column; otherwise, the horizontal and vertical frequencies of the input signal appear here instead. Remaining columns contain details pertaining to each channel setup, such as its switcher number (always 0 = projector), slot location, a variety of icons indicating access to each channel, and an abbreviated description of each signal type.

Signal Type Abbreviations: The Channel Setup menu identifies signal types in a shortened form. These descriptors indicate what signal information the projector uses to identify a match for a given channel, and are preceded by either an “i” (for interlaced signals) or “p” (for progressive signals).

When used with the DHD Controller, the HDMI output signal is represented by either “pDig” or “iDig.”

Unlocking Channels: Channels are pre-configured at the Runco factory for use with the DHD Controller, and are locked to prevent the factory settings from being over-written accidentally. For 1080i and 1080p digital signals, there are separate channels for each aspect ratio and “ISF” memory preset (day and night).

Before proceeding with calibration, unlock the currently-active channel so that any changes you make are stored in that channel.

To unlock a channel:

1. Select **Channel Setup** from the Main Menu to display the Channel Setup menu.
2. The active channel should be highlighted. Press **ENTER** to go to the Channel Edit submenu.
3. Select Locked from the Channel Setup menu and press **ENTER** to clear the check box.

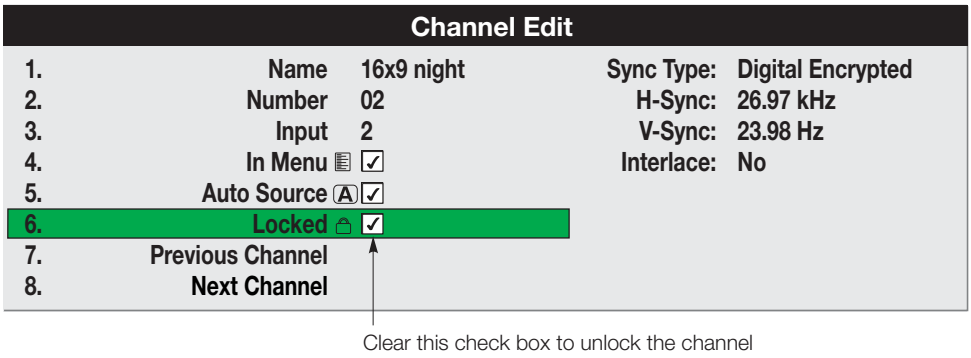

Figure 3-31. Unlocking a Channel

Use the Auto Setup feature of the SC-1 as a convenient starting point for calibrating the projector inputs for optimum picture quality.

Auto Setup

Note

You cannot use Auto Setup with a locked channel; you must unlock it first. Refer to ***Unlocking Channels*** *on page 58.*

Auto Setup is an automated process in which the projector quickly optimizes critical display parameters such as size, position and pixel tracking, based on the type of incoming video signal. An Auto Setup allows you to quickly get the image “in the ballpark” after which you can perform further calibration, if necessary.

To perform an Auto Setup, do one of the following:

On the Theater Master Remote Control: Press **FUNCS**, then **AUTO** followed by **ENTER**. When the Auto Setup completes, press **Enter** again to keep the new settings.

On the Projector Rear Keypad: Press **AUTO SETUP** followed by **ENTER**. When the Auto Setup completes, press **ENTER** again to keep the new settings.

On the DHD Controller Remote Control: Press **MENU**, then select **Service** from the Main menu**.** Select **Display Device** from the Service Menu. Finally, select **Configure** from the Display Device menu, then select **Auto Setup**.

What an “Auto Setup” Does: Auto Setup sets the following parameters to their default values:

- Contrast and Brightness
- Auto Input Level (off)
- Detail (if video source)
- Filter
- Luma Delay

Auto Setup also optimizes the following settings, based on the characteristics of the incoming signal:

- Pixel Tracking
- Pixel Phase
- Size and Blanking
- Vertical Stretch
- Position
- Input Levels

If additional fine-tuning is necessary after performing an Auto Setup, continue with the next section.

Size and Position Menu ➤

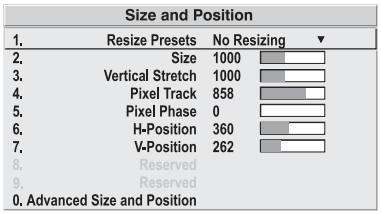

In the Size and Position Menu, you can increase or decrease the size of your image, change its proportion (aspect ratio), move the image to a specific area of the screen, and refine other related parameters. Use Size and Position controls to match the image precisely to the screen. Changes made in the Size and Position menu take effect immediately and are saved when you exit the menu.

Resize Presets: Select a Resize Presets option to quickly display an image in its native resolution, automatically resize an image to closely fill the projector's native resolution or optimize the display width or height.

The native resolution is 2048 x 1080 (1.90:1 native aspect ratio).

Note *The "native" aspect ratio is with the primary lens only. With an anamorphic lens in the light path, the aspect ratio is 2.35:1.*

Size, Position and Blanking parameters automatically adjust accordingly. If Blanking is set first, which defines an Active Input Area, Resize Preset scaling occurs in this region of interest only.

The default setting is either **No Resizing** or **Custom**, depending on the input signal resolution. ***Do not change it unless specifically instructed to do so by Runco Technical Support.***

- **No Resizing:** Select No Resizing to display the image in its native resolution, which may not match the projector's resolution. For example, for a computer display with a native resolution of 800 x 600, "No Resizing" will use the central 800 x 600 pixels and have a black border— the black border areas are unused areas.

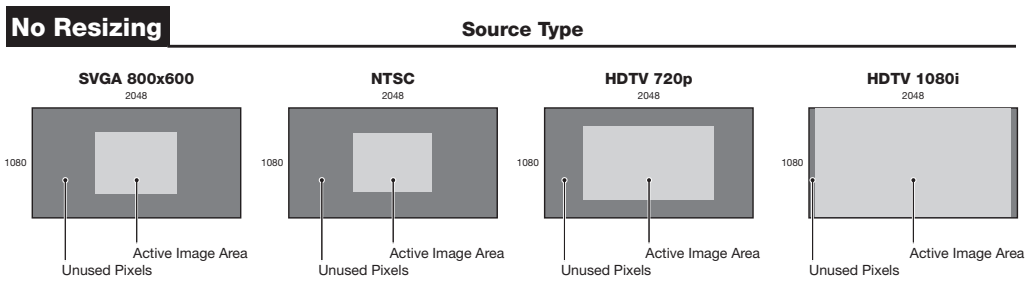

Figure 3-32. Resize Presets: No Resizing

For 1080i digital and 1080p signals, channels are pre-configured at the Runco factory for each aspect ratio. These channels use **Custom** size presets to achieve the selected aspect ratio.

- **"Custom" Resizing:** The "Custom" re-size descriptor automatically appears in the Size and Position menu when any of the values for Size, Vertical Stretch, H-Position, V-Position or Blanking do not correspond to those for a preset. This option is not offered in the Size Presets pull-down list.

Other resizing options are described below, for the sake of completeness. In actual practice, though, they are rarely (if ever) used when the SC-1 is used with the DHD Controller.

- **Default Resizing:** When you select a new source, the image utilizes as much of the projector's display area as possible for the type of incoming source data, but with minimal or no changes to aspect ratio. The image will be centered and displayed as large as possible depending on the source type:
  - A video image or graphic image is enlarged to fill the screen height, centered between black side bars.
  - An anamorphic (16:9) image will fill the height and slightly stretch horizontally to fill the small amount of display area remaining on both sides.
- **Full Size:** Select Full Size to use all pixels for displaying the image, regardless of source or original aspect ratio. Incoming source material having a different aspect ratio than the projector will be stretched to fill the display.
- **Full Width:** Select Full Width to fill the projector's display from left-to-right without changing the original aspect ratio of the image. Depending on the source, data at the top and bottom may be discarded (cropped), or the display may have black borders at the top and bottom (called "letterbox").
- **Full Height:** Select Full Height to fill the display from top-to-bottom. Depending on the source, this may create borders.
- **Anamorphic:** Select Anamorphic to display an anamorphic image in its native 16:9 aspect ratio. The image will fill the screen from top-to-bottom and be centered between narrow (64 pixels wide) black bars on each side.

Size: "Size" controls both the image width and height in tandem, maintaining the current aspect ratio (proportion) of the displayed signal data.

Vertical Stretch: "Vertical Stretch" adjusts the height of the image while keeping the width constant. Use Vertical Stretch to change the aspect ratio of the display.

Pixel Track: Steady flickering or several soft vertical stripes or bands across the entire image indicates poor pixel tracking. Proper pixel tracking helps ensure that the image quality is consistent across the screen, that aspect ratio is maintained, and that pixel phase can be optimized (see below). Tracking determines the frequency of the pixel sampling clock, indicated by the number of incoming pixels per line, so that all pixels generated by a particular source are sampled.

By default, the projector samples at the correct frequency for most sources. For best results, use a good test pattern such as a smooth gray consisting of a clear pattern of black and white pixels, or a similar "half on, half off" graphic image. Adjust the slidebar until the vertical stripes broaden to the point where one large stripe fills the image. If the image still exhibits some shimmer or noise, adjust Pixel Phase (described below).

Pixel Phase: Adjust pixel phase when the image (usually from an RGB source) still shows shimmer or “noise” after pixel tracking is optimized. Pixel phase adjusts the phase of the pixel sampling clock relative to the incoming signal.

Note *Adjust “Pixel Tracking” before “Pixel Phase.”*

For best results, use a good test pattern such as a smooth gray consisting of a clear pattern of black and white pixels, or a similar “half on, half off” graphic image. Adjust the slidebar until the image stabilizes and each pixel is clearly defined. You may notice that you can stabilize the image at more than one point; that is, you may find that the image appearance at “11” is identical to the image appearance at “38.” Use either setting in such cases. If some shimmer from a video or HDTV source persists, use the “Filter” control in the Image Settings menu (described later) to remove high-frequency noise from the signal.

H-Position: This option moves the image right or left within the area of available pixels.

V-Position: This option moves the image up or down within the area of available pixels.

Note *The values shown represent where the approximate center of the image lies in relation to the total number of pixels available horizontally or vertically. This varies widely according to the signal; watch the image while adjusting.*

Image Settings Menu ➤

Use options in the Image Settings menu to alter your image without affecting its size or position. Changes made in this menu are applied immediately and saved when you exit the menu. Options not available for the projector model or source are disabled and appear dim (gray).

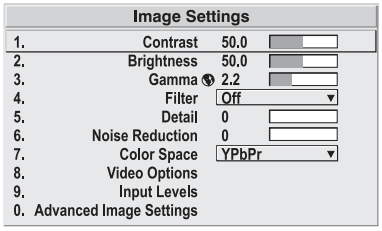

Contrast: “Contrast” increases or decreases the perceived difference between light and dark areas of your image (0-100). For best results, keep it under 50. If contrast is set too high, the light parts of the image lose detail and clarity. If set too low, the light areas will not be as bright as they could be and the overall image will be dim. For best results, start with a low value and increase so that whites remain bright but are not distorted or tinted and that light areas do not become white (“crushed”).

Note *If the environment lighting changes, a Gamma adjustment may be needed (see below).*

Brightness: “Brightness” increases or decreases the amount of black in the image (0-100). For best results, keep close to 50. Start with a high value and decrease so that dark areas do not become black (“crushed”). Conversely, high brightness changes black to dark gray, causing washed-out images.

Gamma: “Gamma” is a global setting that determines how gray shades are displayed between minimum input (black) and maximum input (white) for all signals. The normal gamma setting of 2.2 is correct for virtually all signals and conditions. If excess ambient light washes out the image and it becomes difficult or impossible to see details in dark areas, lower the gamma setting to compensate.

Filter: The proper filter setting is automatically set for virtually all signals, and rarely needs to be changed. It applies a low pass filter for noise reduction in the incoming input signal, particularly for HDTV or SDTV. Applied in the analog domain before sampling, this filtering removes high frequencies and thus reduces pixel phase noise (note this also reduces signal bandwidth). Override only if standard pixel tracking and phase adjustments do not adequately clear up a “noisy” video signal, or if a graphics signal appears overly “soft.” Both instances indicate that “Filter” may be set to the wrong option.

Detail: “Detail” adjusts the sharpness of a video image so that edges remain clearly defined. It can be particularly useful if a significant “Noise Reduction” adjustment has caused the image to appear too soft. Adjust until the display is as sharp as desired, keeping in mind that because “Detail” adds some high frequencies back into the image, it can also reintroduce a certain degree of noise.

Noise Reduction: Noise Reduction is similar to the “Filter” control, but operates in the post-sampling digital domain with a more subtle effect. Higher settings are most useful for clearing up noisy RGB images such as those from a PC. Adjust as desired, keeping in mind that reducing noise (which reduces high frequencies) may also soften the image.

Color Space: “Color Space” determines how the color components of an analog input signal are decoded for accurate color in the display. With the SC-1, this should always be set to **RGB**.

Video Options: This sub-menu is not applicable to the SC-1.

Input Levels: Good RGB or input levels — that is, the drives and black levels for each of the three primary colors, red, green and blue — ensure that images from analog sources other than decoded video have maximum contrast without crushing black or white.

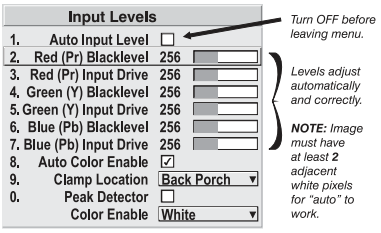

By default (and in an “Auto Setup”), the projector automatically determines the best input levels by monitoring image content and adjusting the controls appropriately; further adjustment is typically not required to obtain proper blacks or whites.

However, for a very unusual source exhibiting one or more overly high black levels (typically caused by a noisy source causing black level spikes), an experienced technician may prefer to use the Input Levels menu (shown above). These adjustments, which together serve as a calibration process compensating for differences in sources and cabling, enable an experienced technician to perfect the source image input levels and eliminate the “overshoot” and “undershoot.”

Note

1. *The White Balance controls are of limited use with digital signals, but do offer some ability to tweak poorly mastered source materials.*
2. *Because the projector automatically optimizes input levels for all but the most unusual of sources, it is recommended that only experienced technicians use the Input Levels submenu.*
3. *Before beginning, check that overall contrast and brightness settings are near 50 and that color temperature is properly set using an internal grayscale test pattern.*

- **Auto Input Level:** Keep off for virtually all sources (default). Temporarily enter a check mark only if you are an experienced technician and you have an unusual source that you feel needs further color temperature and/or input level adjustment. After entering a check mark, wait for the six slidebar values to stabilize, then clear the check mark and exit. This compensates for incoming out-of-range drives (white) and black levels (black) that would cause “crushing” of light and dark colors in the image.

Note

1. *There must be at least two consecutive white pixels present in the image for the “Auto Input Level” function to work properly. Otherwise, input levels may produce skewed colors, particularly in non-video images.*
2. ***Uncheck this item before exiting this menu.***

- **Black Levels and Drives:** To check your image and adjust these controls:
  1. Make sure overall “Contrast” and “Brightness” settings are both set to near 50. (Not required for “Auto Input Level” adjustment.)
  2. Check the color temperature setup using an internal grayscale test pattern, making sure to obtain a neutral grayscale. (Not required for “Auto” adjustment.)
  3. If the blacks and/or whites appear OK, input levels do not need adjustment. If black levels are too high (and/or whites are too low, which is rare), you likely have a noisy source that is producing skewed input levels. Continue with Step 4.
  4. Temporarily enable “Auto” in the Input Levels submenu. Wait for all six values to stabilize. Alternatively, do not use “Auto” — reduce black levels manually instead. Judge by eye and change one or more of the six levels as necessary to obtain proper blacks and whites. You may want to see only a certain color while adjusting; if so, use the “Color Enable” option (described below).
  5. Delete the “Auto” check mark and exit the Input Levels menu.
- **Auto Color Enable:** When a check mark is present, selecting a specific black level or drive to adjust will automatically enable the corresponding color in the display. Delete the check mark to see all colors.
- **Clamp Location:** This option can brighten the image produced from certain high-resolution, high-frequency graphic sources. For almost all sources, the best clamp location is automatically selected by the projector.
  - Use the normal **Back Porch** location if the image is either sufficiently bright or overly bright.
  - Select **Sync Tip** if the image appears unusually dim, if there are horizontal streaks across the image, or if there is significant color drift. This moves the clamping pulse from the normal back porch location (which is likely too short) to the tip of the horizontal sync pulse.
  - **Tri Level** is typically recommended for an HDTV source where the back porch is also short, or for video sources or any RGB source with sync information included on the video (for example, sync-on-green).

- **Peak Detector:** The Peak Detector is a tool to assist with defining individual input levels, enabling you to accurately set the white balance for any particular source with the appropriate image.

  Enabling the Peak Detector activates a special operating mode for detecting only pixels that are considered black or white; all other levels are displayed as a mid-level gray. When used with a smooth grayscale pattern in which black and white are known to be at opposite edges of the image, you can watch these isolated areas while adjusting individual black and white levels until both black and white edges are just visible and distinguished from neighboring pixels. Images from this source will then display correct blacks and whites without crushing.

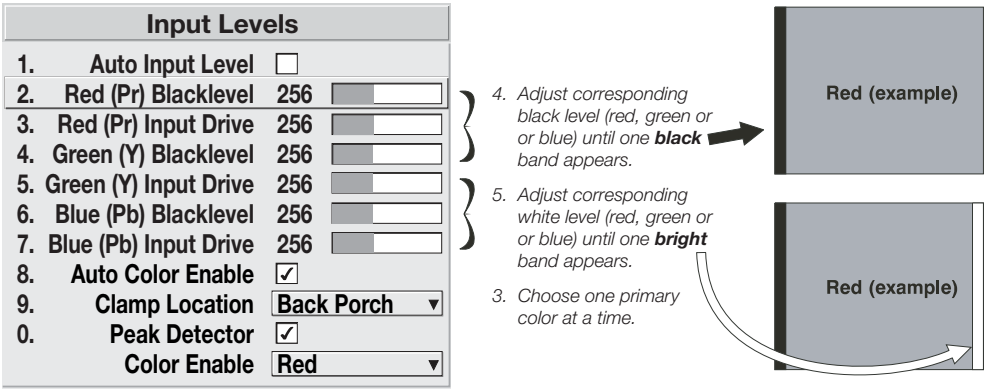

Figure 3-33. Adjusting Black Levels and White Levels Using the Peak Detector

1. Display a 16-level grayscale test pattern from the DHD Controller.
2. Enter a checkmark in the Clipping Detector checkbox.

Note *The Clipping Detector will initially render the grayscale as a uniform gray field before adjustment or extreme crushing.*

3. Display one primary color.

Tip *Selecting Auto Color Enable ensures that the correct color is displayed for each setting.*

4. For the current color, adjust its corresponding “Black Level” slidebar just until a single band of black appears at one edge of the screen. This band represents the first band of the grayscale pattern, which should be 100% black. Do not adjust too far.
5. With the same color still active, adjust its corresponding “White Level” slidebar just until a single band of color appears at the opposite edge of the screen. This band represents the last band of the grayscale pattern, which should be 100% white (or the current color, if a certain color is enabled). Do not adjust too far.

6. It may be advantageous to go back and check the black band. Adjust the blacklevel slidebar if necessary.

Note *Readjusting the black levels affects the gain at this point; only readjust when absolutely necessary.*

7. Repeat Steps 4 through 6 with the other two remaining primary colors. When each primary color shows one optimized black band and white (or colored) band, the input levels for this source are correctly set. Upon exiting the White Balance menu, the Clipping Detector checkbox will clear.

- **Color Enable:** Select which color or colors you want to see in the display. This is useful while working with color temperature white levels or input levels.

When you have finished optimizing the picture quality, lock the channel that you unlocked previously (refer to ***Unlocking Channels*** on page 58), unlock the next channel and repeat the calibration procedure. Do this for **each** of the remaining channels.

3.14 Working With the Lamp

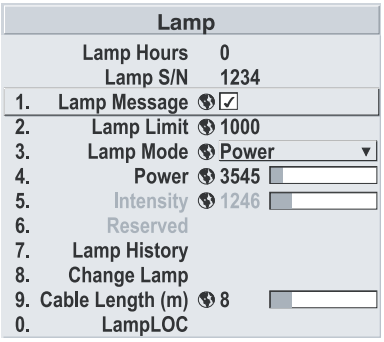

Access the Lamp menu to:

- Choose a lamp mode for regulating power and light output.
- View information pertaining to past and present lamps.
- Record the lamp serial number in the projector's memory.

Lamp Hours (read-only): Lamp Hours shows the number of hours logged on the current lamp. Whenever you record a new lamp serial number, the SC-1 automatically resets this value to "0" and begins to log time for the new lamp.

Lamp S/N (read-only): Lamp S/N is the serial number recorded for the current lamp. When you install a new lamp and enter its serial number, the number appears here.

Lamp Message: Enter a check mark for **Lamp Message** to enable a warning message that appears upon power-up when the lamp has reached the specified lamp limit and should be replaced. Delete the check mark to prevent display of this message—instead, when your lamp expires, only the status display messages on the back of the projector will provide a visual warning to replace the lamp.

Note

1. *It is recommended that the Lamp Message check box remain enabled.*
2. *When a lamp warning message appears, press **EXIT** to temporarily cancel the message. The message will continue to appear upon power-up until you install a new lamp.*

Lamp Limit: Set Lamp Limit to the number of hours you expect to log on the current lamp before replacing it. This will trigger a lamp message on-screen (if enabled).

Note

1. *If you change modes over the life of a lamp, the lamp limit you originally expected may no longer be possible.*
2. *Turning the lamp on and off reduces lamp life significantly, as do other factors.*
3. *It is recommended that Lamp Limit not exceed the expected lamp life, otherwise a lamp could become dangerously fragile with overuse.*

Lamp Mode: Select the **Lamp Mode** you want to use in order to control the light output. You can choose to run the lamp as bright as possible, you can power the lamp with a specific wattage appropriate for the installed lamp or you can set a specific intensity (brightness) to maintain. Keep in mind that higher lamp power settings can shorten lamp life.

Use the lamp mode that best suits your brightness needs:

- **Max Brightness:** The lamp will always burn as brightly as possible, driven by 100% of the power level rating for the installed lamp. Keep in mind that the “maximum brightness” for any lamp gradually diminishes with the “Intensity” option.
- **Intensity:** Brightness will remain close to a specified level for as long as possible. If you select this option, enter a number representing the intensity level (brightness) you want to maintain — the SC-1 automatically adjusts power as needed to maintain this intensity as closely as possible.

  This value and slidebar represents the current brightness of your lamp, decreasing over time when you are operating in Max Brightness mode or at a specific Power level. When you operate in Intensity mode, this value remains at the chosen Intensity setting and cannot be adjusted.

  Intensity 1246

  Note

  The Intensity value is not the actual lumen output, but rather a correlated value only—1246 may represent 3500 lumens, for example.

  To use “Intensity” mode, judge by eye (or use a meter) and set the level as desired for your application. Over time, the projector will automatically increase the power supplied to the lamp as needed to maintain the chosen intensity as closely as possible.
- **Power:** The power supplied to the lamp will remain at your specified wattage level. Once you select this option, enter the number of watts representing the power level you wish to maintain.

  This slidebar and number indicates how many watts are applied to the lamp. You can apply anywhere from approximately 60 to 65% of the maximum power intended for the installed lamp up to 100% of the lamp rating. Set for the number of watts as desired, keeping in mind that lower power levels produce dimmer images. When in either Power or Max Brightness modes, the power level remains constant. Specifying a maximum power level here is the same as operating in Max Brightness mode.

  Power 1941

HOW LONG CAN I MAINTAIN BRIGHTNESS? The SC-1 can maintain your “Intensity” setting until the required power reaches the maximum rating for the lamp. The lower the setting, the longer it will take to reach this threshold and the longer you can maintain the desired brightness. Keep in mind that once the lamp power reaches its maximum wattage (see “Power,” above), this tracking is no longer possible. At this point, the lamp will gradually begin to dim as usual, even though your original “Intensity” value will still appear in the menu. To resume accurate tracking, reduce the intensity setting so that the resulting “Power” value is less than its maximum—the lower the intensity, the longer it can be maintained.

For example, a 2000-watt lamp can be driven at no more than 2000 watts. To produce desired brightness at the screen, a new lamp would likely need less than this maximum rating — perhaps 1700 watts (example only). Over time, however, the lamp requires more and more current in order to generate the desired light, until eventually the lamp wattage reaches its 2000-watt maximum and the lamp power automatically levels off. At this point, the tracking function terminates (that is, the power level stabilizes) and the lamp begins to dim normally. Either reduce your “Intensity” setting or replace the lamp.

Do not lower the “Intensity” so much that the corresponding “Power” value reaches its minimum — the intensity setting will be inaccurate and cannot be maintained.

Note

1. *Lamps become more stable over time, thus a specific intensity is more easily maintained as the lamp ages.*
2. *Intensity can be set only if the lamp is in “Intensity” mode*
3. *Intensity cannot exceed the output of Max Brightness mode.*

Lamp History (read-only): Lamp History shows the lamps most recently installed and recorded in the projector. The Lamp History automatically updates whenever you record a new lamp serial number; the new lamp is added to the end of the list.

Change Lamp: Select **Change Lamp** from the Lamp menu to record the serial number for a newly-installed lamp. For detailed lamp replacement instructions, refer to ***Lamp and Filter Replacement*** on page 91.

LampLOC: Select **LampLOC** from the Lamp menu to adjust the position of the lamp relative to the remainder of the illumination system, to maximize light output. For instructions on using LampLOC, refer to ***Maximizing Light Output*** on page 46.

4. Operation

4.1 Using the On-Screen Menus

Press the **MENU** button on either the remote control or the DHD Controller front panel to display the Main Menu.

To select a menu item, use the ▲ and ▼ buttons on either the remote control or the DHD Controller front panel to highlight it. Press **ENTER** to confirm your selection.

The SC-1 OSD menus are arranged hierarchically, as shown in Figure 4-1. Depending on the selected input source and signal characteristics, some menu options may not be available.

Input Source	Composite
	S-Video 1
	S-Video 2
	Component SD
	HD/RGB 1
	HD/RGB 2
	HDMI 1
	HDMI 2
Aspect Ratio	Anamorphic
	Standard 4:3
	Letterbox
	VirtualWide
	Cinema
	Virtual Cinema
Picture	Brightness
	Contrast
	Color
	Tint
	Sharpness
Input Position	Left/Right
	Up/Down
	Width
	Height
	Overscan
ISF Presets	Recall ISF Night
	Recall ISF Day
	Recall/Save Custom 1
	Recall/Save Custom 2
	Reset Custom 1 & 2 to Factory Default
Information (read-only)	Serial Number
	Hardware
	Firmware
	Date

Note: Virtual Cinema is available only on SC-1 projectors equipped with the CineWide option (secondary anamorphic lens).

Calibration	ISF Night - Display Color	Lamp Power
		Lamp Intensity
	ISF Night - Input Image	Brightness
		Contrast
		Color
		Tint
		Sharpness
	ISF Night - Input Color	Gain
		Offset
		Chroma Delay
		Phase
		Noise Filter
	ISF Day - Display Color	Lamp Power
		Lamp Intensity
	ISF Day - Input Image	Brightness
		Contrast
		Color
		Tint
		Sharpness
	ISF Day - Input Color	Gain
		Offset
		Chroma Delay
		Phase
		Noise Filter
	Save ISF Settings	Back / Confirm
	Output Shift	Left/Right
		Up/Down
		Width
		Height
		Save
	Splash Configure	Owner Name
		ISF Calibrated
		ISF Other
		Runco/ISF Logo Splash Screen Timers (2 ... 60 sec.)
	OSD Position	Vert./Horiz., Normal/Wide, Height

Service	Test Video	Grey Bars 1	
		Grey Bars 2	
		Color Bars 1	
		Color Bars 2	
	Input Names	Rename, Restore or Save	
	Remote Control	Primary	
		Secondary	
	Analog Out Mode	RGB--, RGB++ or RGBS	
	Display Device - Configure	Installation	Picture Orientation
			Keystone
			Lamp Hours (read-only)
		Auto Setup	
	HD Format	HD/RGB 1	Auto, RGB or YUV
		HD/RGB 2	
		ADC Bandwidth	Auto, 75 MHz, 150 MHz or 300 MHz
		YPbPr Input Resolution	Auto, 480i/p, 576i/p, 720p or 1080i
	Triggers	1 / 2 / 3 / Save	
	Miscellaneous	Language	(currently, English only)
		Menu Mode	
		Timeout	
		Side Bar Color	
		Film Mode (SD sources only)	
	Resolution	800x600 ... 1400x1050 480i ... 720p ... 1080i	
	System Reset		
	Restore Saved Settings		

Figure 4-1. DHD Controller OSD Menu Structure for SC-1

The Main Menu is the starting point for accessing all projector functions.

(The Calibration and Service menus are hidden and not accessible until you enter a passcode.)

◄ *Main Menu*

Runco Video
Input Source
Aspect Ratio
Picture
Input Position
ISF Presets
Information
Calibration
Service

From the Main Menu, select Input Source to choose a video signal source.

The active source is indicated by an arrow (>) to its left; in this example, Composite is the active source.

◄ *Input Source*

	Input Source
>	**Composite**
	S-Video 1
	S-Video 2
	Component SD
	HD/RGB 1
	HD/RGB 2
	HDMI 1
	HDMI 2

To change the aspect ratio (size and shape) of the projected image, select Aspect Ratio from the Main Menu and press **ENTER**. Select the appropriate aspect ratio for your screen size and the type of program material being viewed; refer to Table 4-1.

The currently-selected aspect ratio is indicated by a "☒" to its left; in this example, Anamorphic is selected.

◄ *Aspect Ratio*

	Aspect Ratio
☒	**Anamorphic**
☐	**Standard 4:3**
☐	**Letterbox**
☐	**VirtualWide**
☐	**Cinema**
☐	**Virtual Cinema**

Note *The aspect ratio selection is automatically saved for each input and resolution.*

Table 4-1. Aspect Ratio Settings

Aspect Ratio	Remote Control Key	Description	
Anamorphic	ANA	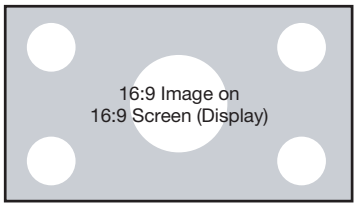 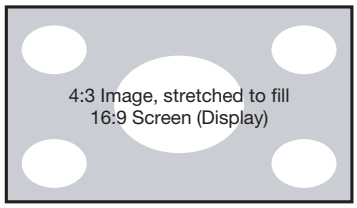	Select Anamorphic to view 16:9 DVDs and HDTV programs in their native aspect ratio. 4:3 images are stretched horizontally to fit a 16:9 screen.
Standard 4:3	4X3	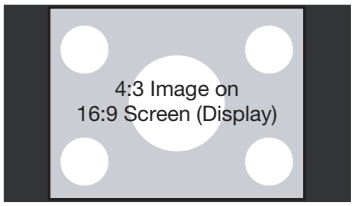	4:3 scales the input signal to fit in the center of the 16:9 screen. 4:3 is the aspect ratio used by computer monitors, standard television programming and most VHS video cassettes.
Letterbox	LET BOX	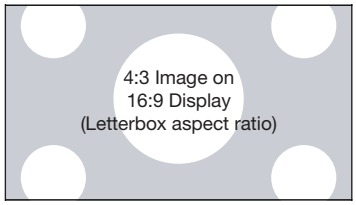	Letterbox mode scales (zooms in on) a 4:3 image linearly (by the same amount on all sides) to fill a 16:9 display. Letterbox is best suited for viewing LaserDisc movies or non-anamorphic DVDs on a 16:9 screen.

Table 4-1. Aspect Ratio Settings (continued)

Aspect Ratio	Remote Control Key	Description	
VirtualWide	V-WIDE	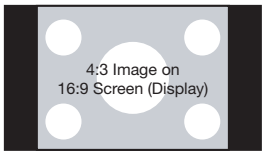 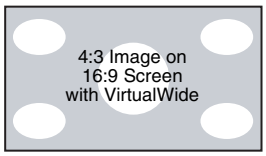 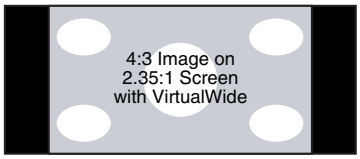	VirtualWide scales a 4:3 image NON-linearly (more on the sides than in the center) to fit a 16:9 screen. On a 2.35:1 screen, the image is centered between black bars on either side.
Cinema	CINEMA	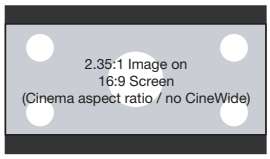 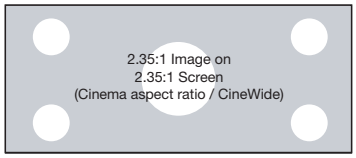	Select Cinema to view 2.35 source material in its native aspect ratio. With a 16:9 screen and a non-CineWide projector (no anamorphic lens), the upper and lower portions of the screen are masked, but the geometry of the active image area is unchanged. With a 2.35:1 screen and a CineWide-equipped projector, the DHD Controller scales the 2.35:1 image so that the active image area fills the 16:9 chip surface, eliminating the black bars. The secondary, anamorphic lens then restores the proper geometry to the 2.35:1 image.

Table 4-1. Aspect Ratio Settings (continued)

Aspect Ratio	Remote Control Key	Description	
Virtual Cinema	SVC	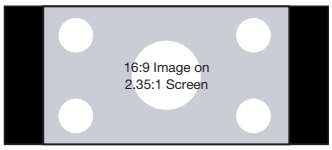 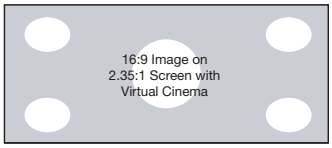	A 16:9 image is scaled NON-linearly (more on the sides than in the center) to fit a 2.35:1 screen. Virtual Cinema is available only on CineWide-equipped SC-1 projectors.

Picture ➤ Use the controls in the Picture Menu to calibrate your SC-1 for optimum picture quality.

Picture
Brightness
Contrast
Color
Tint
Sharpness

The SC-1 has been designed to incorporate setup and calibration standards established by the Imaging Science Foundation (ISF). The ISF has developed carefully crafted, industry-recognized standards for optimal video performance and has implemented a training program for technicians and installers to use these standards to obtain optimal picture quality from Runco video display devices. Accordingly, Runco recommends that setup and calibration be performed by an ISF certified installation technician.

All signal types require separate processing. Therefore, you need to calibrate each DHD Controller input separately.

Note

When you change a picture quality setting, save the change to a preset afterwards. Otherwise, the change will be lost when a different input is selected. (Picture quality settings are saved for each input separately.) For information about saving settings, refer to ***ISF Presets*** *on page 79.*

Although it may be possible to obtain satisfactory picture quality using the naked eye and regular program material, Runco recommends using the following calibration tools for best results:

- External test pattern source – Ovation Multimedia, Digital Video Essentials or AVIA test DVD or equivalent.
- A blue filter (provided with many test DVDs), for color level and tint adjustments.

Connect your test pattern source to the input that you are calibrating and proceed as follows. **Perform the adjustments in the order listed here.**

Brightness: On your external test pattern source, select a PLUGE pattern. (PLUGE is an acronym for “Picture Line-Up Generation Equipment.”) Figure 4-2 shows a typical PLUGE pattern.

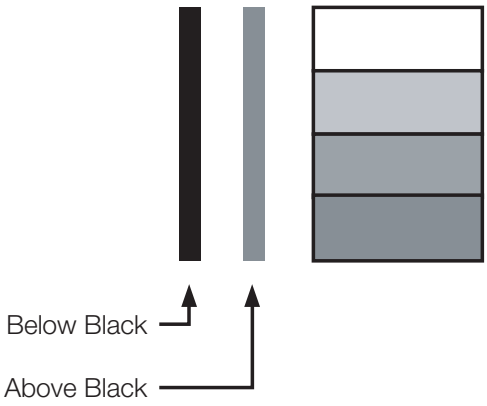

Figure 4-2. Typical PLUGE Pattern for Adjusting Brightness

PLUGE patterns vary but generally consist of some combination of black, white and gray areas against a black background. The example above includes two vertical bars and four shaded boxes.

Select Brightness from the Picture menu and press **ENTER**. Adjust the brightness so that:

- The darkest black bars disappear into the background.
- The dark gray areas are barely visible.
- The lighter gray areas are clearly visible.
- The white areas are a comfortable level of true white.
- The image contains only black, gray and white (no color).

Contrast: On your external test pattern source, select a stepped, gray-bar pattern like the one shown in Figure 4-3.

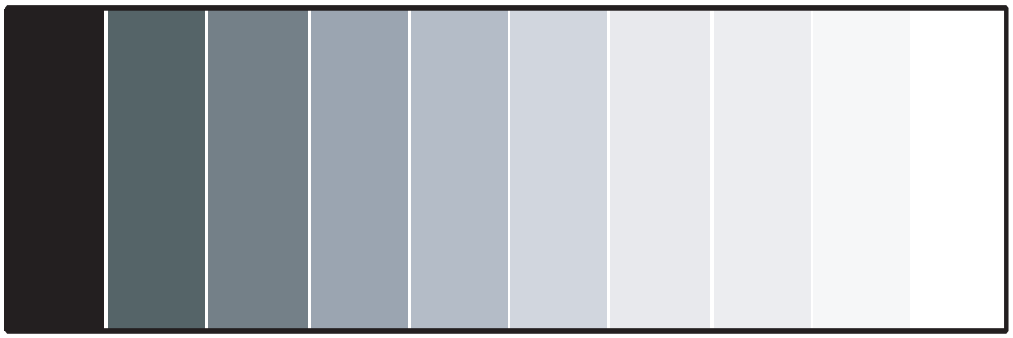

Figure 4-3. Typical Gray Bar Pattern for Adjusting Contrast

Select Contrast and press **ENTER**. Adjust the contrast to a point just below which the white rectangle starts to increase in size.

Note

Brightness and contrast controls are interactive. A change to one may require a subtle change to the other in order to achieve the optimum setting.

Color Saturation: On your external test pattern source, select a color bar pattern like the one shown in Figure 4-4.

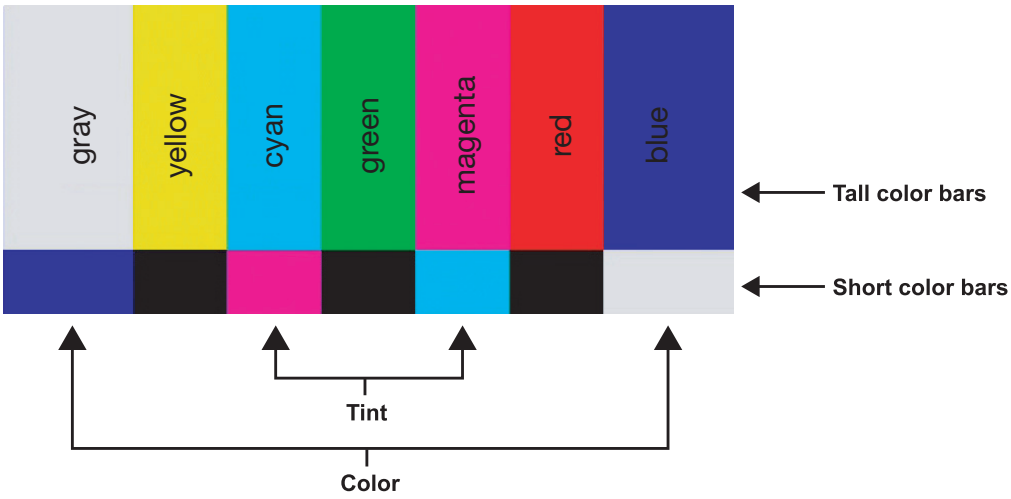

Figure 4-4. Typical Color Bar Pattern for Adjusting Color Saturation and Tint

Select Color and press **ENTER**. While looking at the color bar pattern through a blue filter, adjust the color saturation level until the outermost (gray and blue) color bars appear to be a single shade of blue:

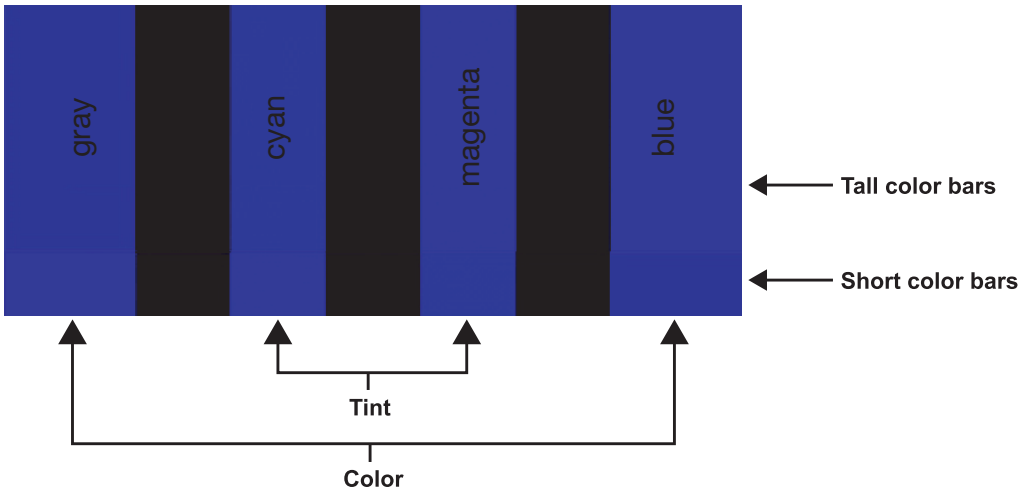

Tint: Tint or “hue” is essentially the ratio of red to green in the color portion of the image. When tint is decreased, the image appears redder; when it is increased the image appears greener. To set the tint, select Tint and press **ENTER**. While looking at the color bar pattern through a blue filter, adjust the tint level until the cyan and magenta color bars (on either side of the green bar) appear to be a single shade of blue.

Note

Like the brightness and contrast controls, the color and tint controls are interactive. A change to one may require a subtle change to the other in order to achieve the optimum setting.

Sharpness: “Sharpness” is the amount of high-frequency detail in the image. To adjust sharpness, select Sharpness from the Picture menu and press **ENTER**. On your external test pattern source, select a pattern like the one shown in Figure 4-5. Adjust as needed, looking for white edges around the transitions from black to gray and differently-sized lines in the “sweep” patterns at the top and bottom. Lower the sharpness setting to eliminate them.

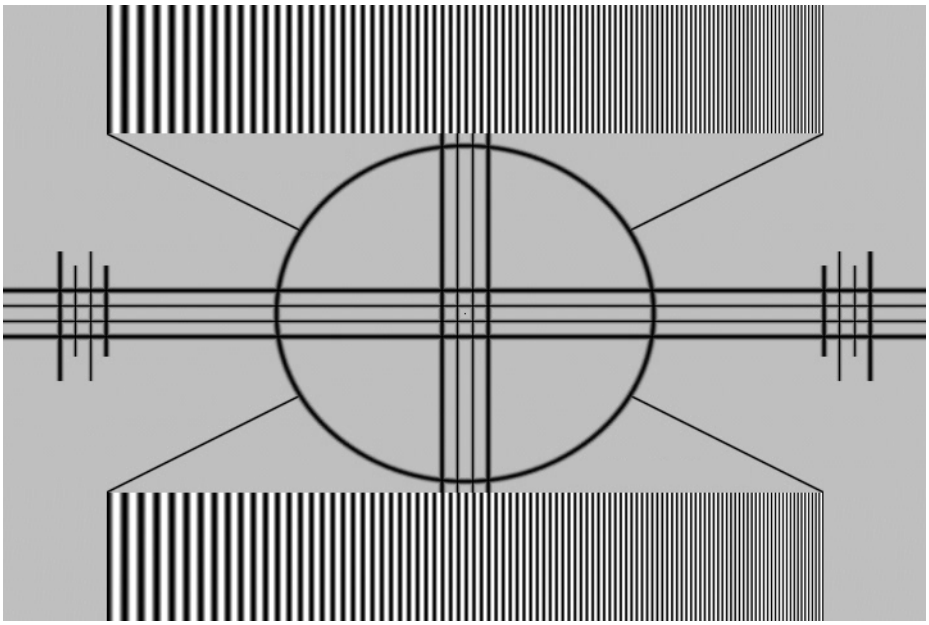

Figure 4-5. Typical Test Pattern for Adjusting Sharpness

Input Position ➤

Input Position
Left/Right
Up/Down
Width
Height
Overscan

Use the controls in the Input Position Menu to fine-tune the aspect ratio and image position for the current source.

Note *The input position settings are automatically saved for each input and resolution.*

Left/Right: Select Left/Right from the Input Position menu to shift the projected image horizontally. Use the right or up cursor button to shift the image to the right; use the left or down button to shift it to the left.

Up/Down: Select Up/Down from the Input Position menu to shift the projected image vertically. Use the right or up cursor button to shift the image upward; use the left or down button to shift it downward.

Width: Select Width from the Input Position menu to change the projected image width. Use the right or up cursor button to increase the width; use the left or down button to decrease it.

Height: Select Height from the Input Position menu to change the projected image height. Use the right or up cursor button to increase the height; use the left or down button to decrease it.

Overscan: Image Overscan pushes the outside edge of the active picture area of the video signal out beyond the edge of the display area.

Some television programs are produced based on the assumption that older television sets may not display the outer edges of the broadcast picture area. Over scan effectively trims away these inactive, outer edges and enlarges the remaining portion of the image to fill the display area.

Select from 1% to 10% of Overscan, as desired.

For HDTV, DVDs and other video sources, Overscan is generally not necessary or desirable.

➤ *ISF Presets*

For each input, the SC-1 lets you save image quality settings as presets that you can recall at a later time. You can create up to four presets per input and resolution. Use the ISF Presets menu to recall saved image presets, or to save image settings in the "Custom 1" or "Custom 2" memory location. The currently-selected preset is indicated by a "☒" to its left; in the example shown here, ISF Night is selected.

ISF Presets		
☒	ISF Night	
☐	ISF Day	
☐	Custom 1	Save
☐	Custom 2	Save
Factory Default		

You should save changes to any of the following settings to a preset; otherwise they will be lost when a new input source or resolution is selected:

- Brightness
- Contrast
- Color saturation
- Tint
- Sharpness

To reset the Custom 1 and Custom 2 image presets to their factory defaults, select Factory Default and press **ENTER**.

➤ *Information*

Select Information from the Main Menu to see information that uniquely identifies your DHD Controller: its serial number, the installed hardware and firmware versions and the firmware version build date. Should you ever need to contact Runco Technical Support, this information will help them answer your questions or resolve product performance issues.

Information	
Serial Number	
Hardware	0
Firmware	0100.033A
Date	Dec 03 2006

Calibration ➤

Calibration
ISF Night
Display Color
Input Image
Input Color
ISF Day
Display Color
Input Image
Input Color
Save ISF Settings
Output Shift
Splash Configure
OSD Position

Use the Calibration menu to perform advanced picture quality adjustments. **This menu should be used by ISF-certified technicians only.**

Note *You must enter a passcode to access the Calibration menu.*

To recall the ISF Night or ISF Day settings, select “ISF Night” or “ISF Day” from the ISF Presets menu (see above).

ISF Night - Display Color: Use the Display Color settings to adjust the projector lamp intensity. These settings are saved independently for each input.

- **Lamp Power:** Select Lamp Power from the Display Color Menu to adjust the lamp output level. You can choose to run the lamp as bright as possible (“100”), at its lowest power level (“0”) or choose a setting in between. Generally, lower lamp output prolongs the life of the lamp, but decreases brightness.
- **Lamp Intensity:** Select Lamp Intensity from the Display Color Menu to adjust the lamp intensity level. Refer to ***Intensity*** on page 67.

ISF Night - Input Image: The Input Image controls are similar to those in the Picture menu, but are accessible only by entering the Calibration menu passcode. This makes it possible to restore the picture quality settings to what they were when the projector was installed, simply by recalling the “ISF Night” preset.

ISF Night - Input Color: Use the Input Color controls to adjust the color balance of the incoming signal. These settings are also saved independently for each input.

- **Gain:** Use the Gain controls to correct color imbalances in the bright areas of the image. A good way to do this is to use a test pattern consisting mostly of solid white areas, such as an 80 IRE “window” pattern. If the white areas contain traces of red, green or blue, decrease the Gain for that color.
- **Offset:** Use the Offset controls in the White Balance sub-menu to correct color imbalances in the dark areas of the image. A good way to do this is to use a test pattern consisting mostly of dark gray areas, such as a 30 IRE “window” pattern. If the gray areas contain traces of red, green or blue, decrease the Offset for that color.
- **Chroma Delay:** Use the Chroma Delay control to correct a mis-aligned image from a Composite, S-Video or Component video source. Chroma delay in an image causes color shifts to occur to the left of the vertical edge transitions, producing artificial shadows or a “halo” effect. If necessary, adjust this setting to eliminate them.
- **Phase:** Adjust the phase if the image (usually from an RGB source) shows shimmer or “noise.” Pixel phase adjusts the phase of the pixel sampling clock relative to the incoming signal. The effect of this control is similar to that of a tracking control on a VCR.

  For best results, use a good test pattern such as a smooth gray consisting of a clear pattern of black and white pixels, or a similar “half on, half off” graphic image. (You may notice that you can stabilize the image at more than one point. Use either setting in this case.)

- **Noise Filter:** To apply noise filtering to the input signal, select Noise Filter from the Input Color menu. The Noise Filter is useful for clearing up noisy images from 480i video sources.

  Use the left- or right-arrow buttons to select the desired amount of noise reduction, keeping in mind that higher settings (which reduce high frequencies) may also “soften” the image.

ISF Day - Display Color: Refer to ***ISF Night - Display Color***.

ISF Day - Input Image: Refer to ***ISF Night - Input Image***.

ISF Day - Input Color: Refer to ***ISF Night - Input Color***.

Save ISF Settings: Whenever you make a change to the ISF settings, you should always save it. Select Save ISF Settings from the ISF Calibration menu to do this. In the event you ever have to perform a System Reset, you can restore the saved ISF settings by selecting Restore Saved Settings in the Service menu. (System Reset and Restore Saved Settings are described on page 85.)

Output Shift: The controls in the Output Shift menu are similar to those in the Input Position menu, except that they change the characteristics of the output signal. These settings are saved independently **for each aspect ratio**.

To save the Output Shift settings for the current aspect ratio so that they can be restored after a System Reset (described on page 85), press ▼ repeatedly to highlight “Save.” Then, press **ENTER**.

Splash Configure: Use the Splash Configure menu to customize the appearance of the start-up message that appears on the vacuum fluorescent display upon power-up.

- **Owner Name/ISF Calibrated/ISF Other:** You can have the SC-1 display the owner’s name, your name, the phrase “ISF Calibrated” and/or any other string, up to 20 characters in length.

  Use the up or down cursor button to select a character. Use the right and left cursor buttons to change the cursor position. Press **MENU** when you have finished entering text. Then, check the “Splash Enable” box to have the SC-1 display the information you enter here when it is turned on.
- **Runco/ISF Logo Splash Screen Timers:** When you turn on the SC-1, it projects a welcome screen with the Runco logo followed by one with the ISF logo. Select Splash Timer from the Splash Configure menu to set the amount of time that these two images appear. The range is from 2 to 60 seconds, in one-second increments.

  Use the up or down cursor button to select a timer value to adjust. Use the right or left cursor button to change the timer value. Press **MENU** when you have finished configuring both timers.

OSD Position: Select OSD Position, press **ENTER** and use the arrow buttons to change the size and position of the OSD controls.

Service ➤

Use the Service menu to access advanced projector configuration settings. **This menu should be used by ISF-certified technicians only.**

Service
Test Video
Input Names
Remote Control
Analog Out Mode
Display Device
HD Format
Triggers
Miscellaneous
Resolution
System Reset
Restore Saved Settings

Note *You must enter a passcode to access the Service menu.*

Test Video: Select Test Video from the Service Menu to access the internal test patterns on the SC-1. Four patterns are available, consisting of white/gray or colored bars.

Press **MENU** to exit test pattern mode.

Input Names	
	Restore
Composite	**Composite**
S-Video 1	**S-Video 1**
S-Video 2	**S-Video 2**
Component SD	**Component SD**
HD/RGB 1	**HD/RGB 1**
HD/RGB 2	**HD/RGB 2**
HDMI 1	**HDMI 1**
HDMI 2	**HDMI 2**
Save	

Input Names: You can give each DHD Controller input a descriptive name. For example, you may want to change the default input name to the type of source component connected to it: “VCR,” “DVD,” “Laptop” et cetera. Composite, S-Video and Component SD input names can be up to 12 characters long; the others can be up to eight characters long.

To edit an input name, select Input Names from the Service menu. Press ▲ or ▼ to select an input and press **ENTER**. Use the ▲ or ▼ buttons to change a character; press ◀ or ▶ to select a character to change. When you have finished editing the input name, press **MENU**.

To restore the default input name, press ▼ repeatedly to highlight that input name in the “Restore” column. Then, press **ENTER**.

To save input names so that they can be restored after a System Reset (described on page 85), press ▼ repeatedly to highlight “Save.” Then, press **ENTER**.

Note *The ▼ button takes you from top to bottom in the left column, then from top to bottom in the right column. To highlight “Save,” scroll through both columns.*

Remote Control: The Remote Control menu shows you the primary and secondary infrared (IR) codes to which the DHD Controller will respond. By default, both are set to 17. You can change these codes if either:

- Another device in the theater (a DVD player, for example) is responding to commands from the DHD Controller remote control (Figure 2-6) in ways that are unpredictable or undesirable.
- You have multiple DHD Controllers and want to control them independently, as opposed to broadcasting commands from a single remote to all of them. In this scenario, you can use multiple remotes programmed to use different IR codes. Or, you can use a single remote and change the IR code as needed to address a specific device.

Tip *Use the DHD Controller front-panel keypad to change its IR code. Then, change the code sent by the remote to match as described below.*

Note *Do not change the "Type" setting in this menu.*

When you change a remote code on the DHD Controller, you must re-program your remote control to send that same code. To do this:

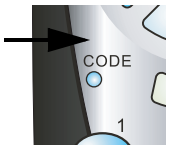

1. Using a straightened paper clip or similar object, press and hold the **CODE** button on the remote control for approximately three seconds, or until the red LED on the remote lights solid red.
2. Enter a new two-digit code between 00 and 31 inclusive. Include a leading zero for single-digit codes; for example, enter 9 as "09."
3. The LED turns off to confirm the code change. If you enter an invalid code, the LED flashes for three or four seconds. Try again, entering a valid code.

Analog Out Mode: Select Analog Out Mode from the Service menu to change the characteristics of the analog output signal from the DHD Controller. The choices are RGB-- (separate sync with negative polarity), RGB++ (separate sync with positive polarity) or RGBS (composite sync).

Display Device: The options in the Display Device menu allow you to perform various adjustments at the projector.

- **Configure:** Select Configure from the Display Device menu to change the picture orientation, correct a "keystoned" (trapezoidal) image, access the lamp timer, perform lens adjustments and quickly optimize various display settings.
  - **Installation - Orientation:** Refer to ***Adjusting the Picture Orientation*** on page 47.
  - **Installation - Keystone:** If the projector and screen are not installed perpendicular to each other, the image may become distorted in a trapezoidal shape, as shown in Figure 4-6. Select Keystone from the Configure menu to compensate for this.

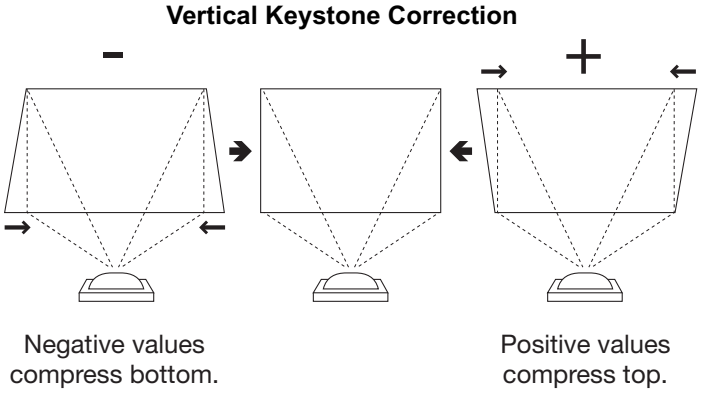

Figure 4-6. Keystone Correction

- **Installation - Lamp Hours:** This menu page also displays the number of hours that the lamp has been in service. To reset the counter (which is recommended after you replace the lamp), refer to ***Lamp and Filter Replacement*** on page 91.
- **Auto Setup:** Refer to ***Auto Setup*** on page 59.

HD Format	
HD/RGB 1	**Auto**
HD/RGB 2	**Auto**
ADC Bandwidth	**Auto**
YPbPr Input Resolution	

HD Format: If the characteristics of the incoming signal on the HD1 or HD2 inputs are known, select HD Format from the Service menu and set them as described below. Doing so can reduce the time it takes the DHD Controller to switch from HD to 480i signals or vice versa.

This is generally not necessary unless the DHD Controller – for whatever reason – has difficulty determining the color space (RGB or YUV), bandwidth or resolution of the incoming HD signal. In most situations, the **Auto** settings work well.

- **HD/RGB 1 and HD/RGB 2 (Color Space):** Select Auto, RGB or YUV.
- **ADC Bandwidth:** Select Auto, 75 MHz, 150 MHz or 300 MHz.
- **YPbPr Input Resolution:** Select Auto or specify the input resolution, if known: 480i, 480p, 576i, 576p, 720p or 1080i.

Triggers: Select Triggers from the Service menu to configure the 12-volt trigger outputs. You can assign one or more trigger outputs to each aspect ratio. Those triggers are then activated by selecting that aspect ratio.

If your projector is equipped with the Runco CineWide with AutoScope system, assign at least one trigger output (the same one to which the lens motor is connected) to the Cinema and Virtual Cinema aspect ratios.

Tip

To configure a trigger to activate when the system is turned on – for example, when using the trigger to control a retractable screen – assign that trigger to all aspect ratios.

To save the trigger settings so that they can be restored after a System Reset (described below), press ▼ repeatedly to highlight “Save.” Then, press **ENTER**.

Miscellaneous: Select Miscellaneous from the Service menu to set the following options:

- **Language:** Select Language from the Miscellaneous menu and press the up- or down-arrows to select the OSD language. (Currently, only English is supported.)
- **Menu Mode:** This is the manner in which the OSD menus appear and disappear when you press MENU. Choose one of the following:

  0 = No transition; menus abruptly appear and disappear.
  1 = Menus fade in and out.
  2 = “Checkerboard” dissolve; menus appear and disappear in sections.
  3 = “Window shade” effect; menus are drawn on a diagonal from top left to bottom right, and retract in the opposite direction.
- **Timeout - Short/Long:** These settings control how long the OSD menus stay on screen. Select a time-out period of from 2 to 60 seconds.
- **Side Bar Color:** This controls the color of the inactive image area. The range is from -100 (black) to 100 (white).

  The inactive image area is on either side of the active image area when using the Standard 4:3 aspect ratio, and above and below the active image area when using the Letterbox aspect ratio.

- **Film Mode:** Enable Film Mode to smooth out moving images from interlaced, standard-definition (SD) sources. In most cases, the DHD Controller detects the proper “pull-down” rate and vertical frequency. However, if your source is jittery and/or tearing you may wish to enable Film Mode to ensure stable processing for that source.

Resolution: When using the SC-1 with a computer or certain HD sources, you may want to force the DHD Controller to use a specific output resolution. If so, select Resolution from the Service menu and choose one. Then, press **ENTER** to confirm.

System Reset: To reset ALL projector and controller settings (including image settings) back to their factory defaults, select System Reset from the Service menu.

A confirmation message appears, reminding you to save your settings before you perform the reset, so that you can restore them afterwards. If you have done this, select Confirm to continue with the reset. Otherwise, select Back to cancel.

Caution

This action is not undoable. Proceed with caution! *Before you perform a System Reset, save ALL settings, including “Custom” ISF Presets (page 79), ISF Day/Night presets (page 81), Output Shift settings (page 81), Input Names (page 82) and Trigger settings (page 84).*

Restore Saved Settings: Following a System Reset, select Restore Saved Settings to apply all previously-saved settings to the projector and DHD Controller.

Notes:

5. Maintenance and Troubleshooting

5.1 Safety Guidelines

The SC-1 is designed for safe and reliable operation. However, safe operation is not assured by design alone; installers, service technicians, trained operators and all other users must maintain a safe environment at all times. Please read and understand all warnings and precautions in this manual and on the projector itself before attempting to operate or service the projector.

WARNING

Never look directly into the projector lens or at the lamp. The extremely high brightness can cause permanent eye damage.

For protection from ultraviolet radiation, keep all projector housings intact during operation. Protective clothing and safety goggles are recommended.

The American Conference of Governmental Industrial Hygienists (ACGIH) recommends occupational UV exposure for an eight-hour day to be less than 0.1 microwatts per square centimeter of effective UV radiation. An evaluation of the installation site is advised to ensure that no one is exposed to cumulative radiation levels exceeding the government guidelines for your area.

Be aware that some medications are known to increase one's sensitivity to UV radiation.

WARNING

FIRE HAZARD. Keep hands, clothes and all combustible material at least one meter away from the concentrated light beam of the lamp.

Position all cables where they cannot contact hot surfaces or be pulled or tripped over.

Opening or removing a projector cover requires a qualified service technician.

AC/Power Precautions

- Do not attempt operation if the AC supply is not within the specified voltage range.
- Do not allow anything to rest on the power cords. Locate the projector where cords cannot be damaged by persons walking on it or objects rolling over it. Never operate the projector if a power cable appears damaged in any way.
- Do not overload power outlets and extension cords as this can result in fire or shock hazards.
- Note that **only qualified service technicians** should open any enclosure on the product, and only if AC has been fully disconnected from the projection head and ballast.
- Disconnect the SC-1 from AC before opening any enclosure.

5.2 Maintaining Proper Cooling

The high-intensity lamp and electronics rely on a variety of cooling components to reduce internal operating temperatures. Regular checking and maintenance of the entire cooling system is critical to prevent overheating and sudden projector failure, and helps to ensure reliable operation of all projector components over time.

Ventilation ➤ Vents and louvers in the projector covers provide ventilation, both for intake and exhaust. Never block or cover these openings. Do not install the projector near a radiator or heat register, or within an enclosure.

Air Filter ➤ It is recommended that you replace the air filter (located on the lamp side of the projection head) whenever you replace the lamp, or more often in dusty or dirty environments. A clogged filter reduces air flow, and can lead to overheating and projector failure. Check the air filter monthly. For detailed instructions, refer to ***Lamp and Filter Replacement*** on page 91. It is also recommended that you visually check the laminar airflow device (LAD) located nearby. The LAD should be nearly white or light grey in color.

Liquid Cooler ➤ The liquid cooler system circulates liquid to and from the DMDs in the projection head, reducing their operating temperature to an acceptable level. Periodically check the coolant level visible by removing the igniter grille (rear side grille adjacent to the side input panel). The reservoir should be approximately half-full.

Note *A failure of the liquid cooling system will trigger an over-temperature alarm condition, clearly indicated with status displays at the top of the projector.*

FILLING THE COOLER: The cooler should require filling only upon projector installation. Fill with a 50/50 mix of distilled water and ethylene glycol. Top off as necessary. Do not overfill.

WARNING *Whenever coolant has been added or replaced, check for a possible airlock upon the next projector power-up.*

Exhaust Duct and Lamp Fan Interlocks ➤ After installation, check and maintain operation of both vane switches — one in the exhaust duct and one near the lamp fan — as follows:

1. Turn the projector on (lamp is not needed).
2. Turn your extractor fan OFF.
3. Confirm that the LCD status display shows that the extractor fan vane switch has failed. Turn fan back ON to correct.
4. Block the air intake at the rear corner of the projection head (input side, next to the ballast control and safety interlock connectors; see Figure 2-1).
5. Confirm that the LCD status display shows that the lamp fan vane switch has failed. Clear air intake to correct.
6. Repeat this procedure every six months in permanent installations.

Maintain vane switches as described in the next section, ***Maintenance and Cleaning***.

Note *If the exhaust duct becomes significantly blocked — or if a fan fails — the projector's airflow sensor should trigger a shutdown before the projector becomes overheated or unsafe. Regardless, check the airflow periodically.*

5.3 Maintenance and Cleaning

To help ensure optimized performance and reliability, check electrical, optical and other components regularly as described below.

WARNING ***SHOCK HAZARD.*** *Turn off the SC-1 and disconnect it from AC before performing any maintenance or cleaning.*

Electrical

Do the following every 60 days or 500 hours of projector use:

- Check the contact surfaces of the positive (anode) and cathode (negative) connections for cleanliness. Clean electrical contact surfaces as necessary to prevent contact resistance from scorching connectors.
- Verify that all electrical and lamp connections are tight.

Optical

Unnecessary cleaning of optics can be more harmful than helpful, increasing the risk of degrading delicate coatings and surfaces. In this projector, check only the lens and lamp reflector — maintenance of other optical components requires a qualified service technician. Check these components periodically in a clean, dust-free environment using a high-intensity light source or flashlight. Clean them only when dust, dirt, oil or other marks are obvious. Never touch an optical surface with your bare hand; always wear latex lab gloves.

When to Check the Lens: A small amount of dust or dirt on the lens has minimal effect on image quality — to avoid the risk of scratching the lens, clean the lens only if absolutely required; see below.

When to Check the Lamp Reflector: Inspect the mirror surface (reflector) for cleanliness only during a lamp replacement, when the lamp is out. If necessary, clean as described below. **Always wear protective clothing while inspecting or cleaning.** Note that color on the reflector surface may vary; this is normal.

Required Materials and Supplies

For cleaning off dust and/or grease, you will need:

- Soft camel-hair brush.
- Dust-free blower — filtered dry nitrogen blown through an anti-static nozzle.
- Dust-free lens tissue: Melles Griot® Kodak tissues (18LAB020), Optowipes™ (18LAB022), Kimwipes® or equivalent.
- Lens cleaning solution: Melles Griot Optics Cleaning Fluid 18LAB011 or equivalent (for lens only).
- Methanol (for reflector only).
- Cotton swabs with wooden stems only
- Lens cleaning cloth/microfiber: Melles Griot 18LAB024 or equivalent.

Cleaning the Lens ➤

Removing Dust:

1. Brush most of the dust off with a camel-hair brush and/or blow dust away with compressed air.
2. Fold a microfibre cloth smooth and gently wipe remaining dust particles off the lens. Make sure to wipe evenly with the smooth portion of the cloth that has no folds or creases. Do not apply pressure with your fingers — use the tension in the folded cloth itself to collect the dust.
3. If significant dust is still bound to the surface, dampen a clean microfibre cloth with lens cleaning solution (damp, not dripping). Wipe gently until clean.

Removing Fingerprints, Smudges, Oil and Other Substances:

1. Brush most of the dust off with a camel-hair brush and/or blow dust away with compressed air.
2. Roll a lens tissue around a swab and soak in lens cleaning solution. The tissue should be damp but not dripping.
3. Gently wipe the surface using a figure-8 motion. Repeat until blemish is removed.

Cleaning the Reflector ➤

Removing Dust:

1. Brush most of the dust off with a camel-hair brush and/or blow dust away with compressed air.
2. If some dust remains, just leave as is — air circulating at the lamp is unfiltered, so some dust is inevitable. Avoid unnecessary cleaning.

Removing Fingerprints, Smudges, Oil and Other Substances:

1. Brush dust off with a camel-hair brush and/or blow dust away with compressed air.
2. Fold a clean microfibre cloth and dampen with methanol. Make sure to wipe evenly with the smooth portion of the cloth that has no folds or creases. Do not apply pressure with your fingers; use the solution in the cloth to collect the dirt.

Cleaning Other Components ➤

In a normal operating environment check, clean and treat the following components every six months or so to help ensure proper lamp and projector function:

Lamp Fan: A clogged lamp fan impeller or motor can reduce air flow, leading to possible overheating and failure of the lamp. Clean and treat the impeller as follows:

1. Vacuum loose dirt from the lamp fan impeller.
2. If necessary, use a brush with hot water and suitable detergent.

WARNING *Do not bend the impeller blades or loosen the balancing weights.*

Igniter: Clean the high voltage terminal and insulator to remove accumulated dust or dirt.

Air Flow Interlocks: The lamp fan vane switch is located within the lamp cooling compartment. The extractor vane switch is located just inside the top exhaust duct on the projector. Check and, if necessary, clean the switches to remove accumulated dust or dirt that could impede movement.

Within the exhaust duct connected at the top of the projector, adequate airflow must be maintained and routed away from the operating area surrounding the projector. Inspect regularly and confirm that:

- There are no obstructions or “kinks” within the ducting.
- All air intake areas of the projection head and ballast are unobstructed.
- Exhaust airflow at the top vent is at least 600 CFM. Make sure lamp wiring does not interfere with vane switch operation. Refer to ***Maintaining Proper Cooling*** on page 88.

Laminar Airflow Device (LAD): Whenever you check or replace the air filter on the side of the projector, also visually check the small square laminar airflow device just beyond the filter opening. The LAD should be nearly white in color. If it is very dark (rare), it may need to be replaced by a qualified service technician. Contact Runco or your dealer.

5.4 Lamp and Filter Replacement

The SC-1 uses a xenon lamp to deliver its high brightness. The lamp should be replaced when it reaches the end of its life (typically 1000 hours), or sooner if a noticeable degradation in brightness occurs. When you replace a lamp, you should replace the air filter as well.

Keep track of the number of hours the lamp has been in use and be aware of any changes to brightness. These indicators will help you effectively maintain operation of the projector. To find out how long the currently-installed lamp has been in service, select Lamp Hours from the DHD Controller Installation menu (available by selecting **Service -> Display Device -> Configure -> Installation**, in sequence).

For lamp or filter replacement, please contact your nearest Runco authorized service center or Runco dealer. Do not attempt to replace the lamp yourself!

➤ ***Lamp Replacement***

WARNING

Xenon arc lamps are under high pressure and must be handled with great care at all times. Lamps may explode if dropped or mishandled. Allow the lamp to cool completely before attempting to remove it.

Never open the lamp door unless you are wearing protective clothing. Recommended protective clothing includes — but may not be limited to — protective gloves, latex lab gloves, a double-layer 0.040” acetate face shield, and a quilted ballistic nylon jacket or welder’s jacket.

1. **Turn off the projector.** Allow the projector cooling fans to run for at least 10 minutes prior to disconnecting the power cord and removing the lamp assembly for replacement.
2. Disconnect the AC power cord from the projector.
3. Remove the screw holding the lamp/air filter cover in place. Then, lift the cover up and away from the projector (see Figure 3-6).
4. Turn the knob to open the inner lamp cooling compartment and reveal the cathode end (–) of the lamp (see Figure 3-6).

5. Using a hex wrench of the appropriate size, loosen the set screws from the negative/cathode (rear, 7/64”) and positive/anode (front, 3/16”) lamp connectors; see Figure 5-1. ***Apply minimal torque and DO NOT stress the quartz tube.***

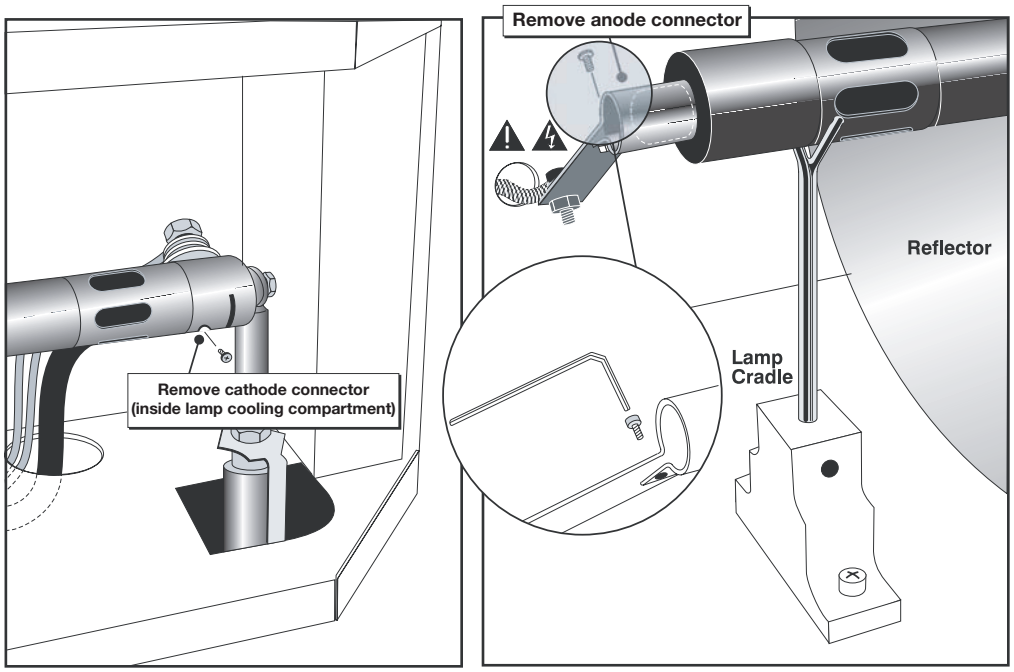

Figure 5-1. Disconnecting the Old Lamp

6. ***Carefully*** slip the positive anode connector off the front of the lamp.
7. Handling ***by the cathode end only***, unscrew the lamp from the rear connector and carefully remove it from the projector. Immediately place the lamp inside the protective cover (saved from previous installation) and then seal it in a heavy carton on the floor where it cannot fall or be bumped.
8. With the lamp removed, visually inspect the reflector for dust. Clean if necessary as described in ***When to Check the Lamp Reflector*** on page 89.

WARNING *Handle the box with extreme caution. The lamp is hazardous even when packaged. Dispose of the lamp box according to local safety regulations.*

9. **Remove the new lamp from its protective cover:** Remove the tape, knurled nut and locking star washer (if present) securing the lamp within its cover.
10. Handling at the ends only, extract the lamp from the cover. Set aside the protective cover for re-use in your next lamp disposal or for warranty return of an expired lamp.
11. **Install new lamp:** With protective clothing and face shield on, insert the threaded cathode (–) end of the lamp into the negative lamp connector nut located in the rear of the lamp compartment and screw in fully; see Figure 5-2. Hand-tighten only.

WARNING *Handle the lamp by the cathode/anode end shafts only, never the glass.* ***Do not over-tighten or stress the glass.***

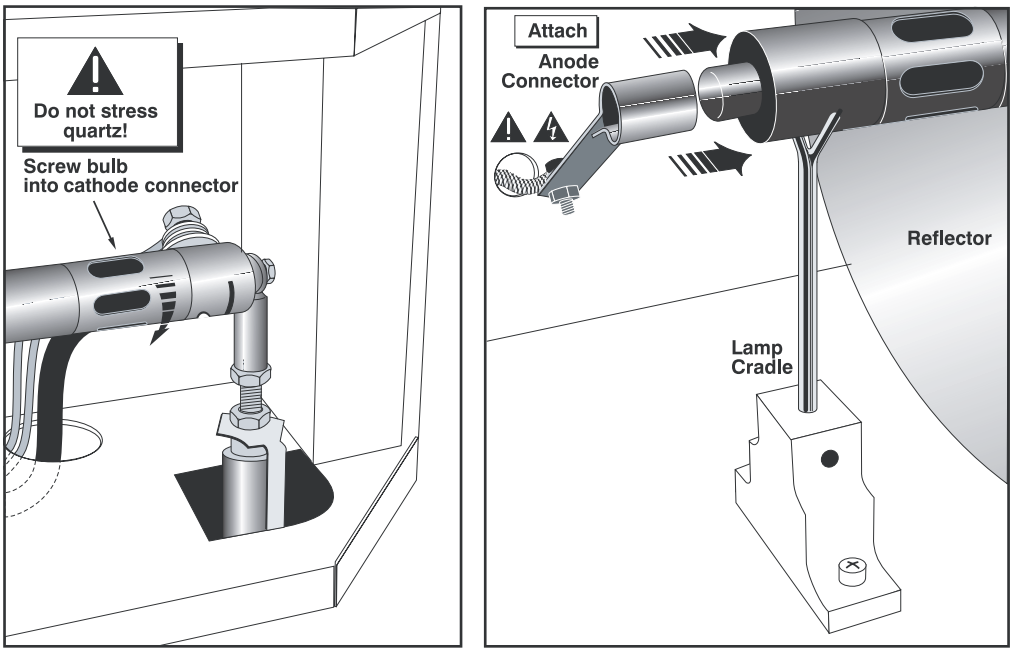

Figure 5-2. Installing A New Lamp

12. Rest the anode (+) end of the lamp on the lamp cradle as shown in Figure 5-2. Then, slip the positive lamp connector over the bulb end.
13. Tighten the set screws in both negative and positive lamp connectors; see Figure 5-3. If you accidentally touch the quartz body of the lamp with your bare hands, clean the surface as described in ***Maintenance and Cleaning*** on page 89.

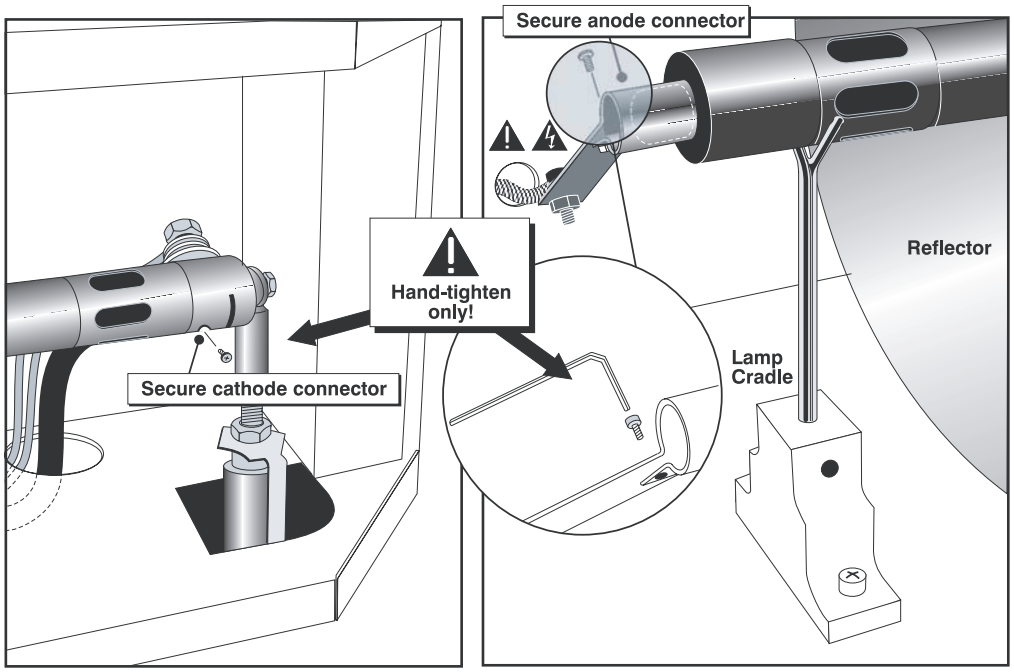

Figure 5-3. Securing Lamp Anode (+) and Cathode (-) Connectors

14. **Check Leads:** Make sure that the anode (+) lead between lamp and igniter is well away from any projector metal such as the reflector or firewall.

WARNING *Leads too close to metal parts will cause arcing during starting pulse. This is a SAFETY HAZARD, and the lamp may not ignite.*

15. Close the inner lamp cooling compartment door and turn the knob clockwise to secure it.
16. Replace the lamp/air filter cover and tighten the screw to secure it.
17. Re-attach the AC power cord to the projector.
18. If the new lamp is the same size as the replaced lamp, continue with Step 19. Otherwise, specify the new lamp size; refer to ***Defining the Installed Lamp Size*** on page 44.
19. Turn the projector back on. Allow the projector and lamp to warm up for approximately 10 minutes before continuing.
20. **Adjust Lamp Position:** Perform the steps listed in ***Maximizing Light Output*** on page 46.

Record the New Lamp Serial Number:

21. Press **MENU** on the projector remote control (Figure 3-29) or control panel (Figure 2-3).
22. Select **Lamp** from the Main Menu.
23. Select **Change Lamp** from the Lamp menu.
24. Enter the serial number in the **Lamp S/N** text box using the remote numeric keypad.
25. Press **ENTER** to accept the change. This adds the new lamp serial number to the Lamp History menu and resets the Lamp Hours timer to “0.” Lamp Mode and Lamp Limit remain as they were for the previous lamp and can be changed at any time.

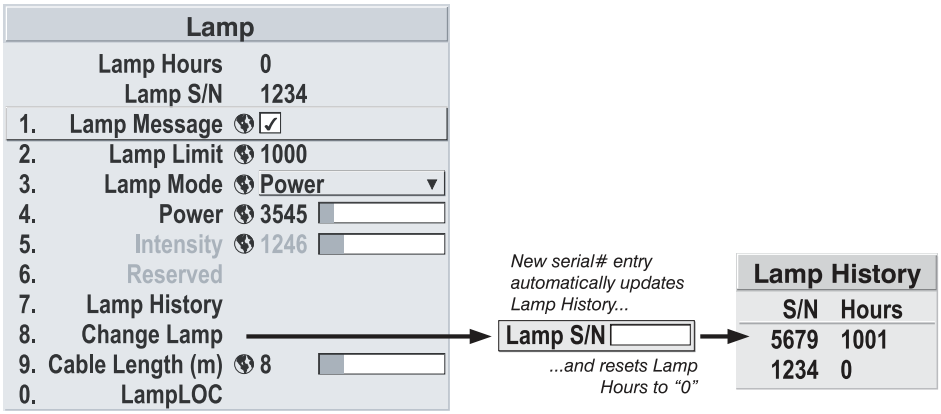

Figure 5-4. Recording the Serial Number of a New Lamp

Note *Always record the serial number of a new lamp. Do this **only** if you have just installed a new lamp. This will ensure that the lamp timer is not reset on an old lamp and that the number of hours logged on the lamp is accurate.*

Filter Replacement

Whenever you replace the lamp – or more often if the projector is installed in an extremely dusty environment – you should also replace the air filter. The filter is located on the lamp side of the projection head, near the front (see Figure 2-1).

1. **Turn off the projector.** Allow the projector cooling fans to run for at least 10 minutes prior to disconnecting the power cord and removing the lamp assembly for replacement.
2. Disconnect the AC power cord from the projector.
3. Remove the screw holding the lamp/air filter cover in place. Then, lift the cover up and away from the projector (see Figure 3-6).
4. Slide the old filter down and out, then discard.
5. Insert the new air filter, following the labeling for proper inside/outside orientation. Slide all the way up, under top tabs.

WARNING *Use only Runco filters. Never operate the projector without the filter installed.*

6. Replace the lamp/air filter cover and tighten the screw to secure it.

5.5 Lens Replacement

If you need to remove the lens – either to replace it or to prepare the projector for shipment – see Figure 3-5 and proceed as follows:

1. Power down the projector and wait at least 10 minutes to allow the lamp to cool.
2. Remove the secondary anamorphic lens, if present.
3. Place the lens cap on the installed lens to protect it from damage.
4. Release the lens safety tether from the lens ring clamp (if installed).
5. Turn the lens locking lever to the “unlocked” (UP) position.
6. Pull the lens straight out.

If you are installing a new lens, refer to ***Installing the Primary Lens*** on page 24.

5.6 Troubleshooting Tips

Table 5-1 provides some general guidelines for troubleshooting problems you may encounter with the SC-1. If the suggested solutions fail to resolve the problem or if you encounter an issue not described here, please contact Runco Technical Support.

Table 5-1. Troubleshooting Chart

Symptom	Possible Cause(s)	Solution
The projector does not turn on.	• The SC-1 is not plugged in or the AC outlet is not active. • The DHD Controller is not plugged in or the AC outlet is not active. • The remote control batteries have run out. • The serial connection from the DHD Controller to the SC-1 is faulty or incorrect.	• Ensure that the SC-1 is plugged in and that the AC outlet is active. • Ensure that the DHD Controller is plugged in and that the AC outlet is active. • Replace the batteries. • Ensure that the RS-232 output from the DHD Controller is properly connected to the RS-232C input on the SC-1 (see Figure 3-13).
The projector and DHD Controller are both on, but there is no picture and on-screen menus do not appear.	• Lens cover is on or shutter is closed. • Lamp failed to ignite. • Faulty or incorrect video connection between the DHD Controller and the SC-1.	• Ensure that the lens cover is off and the shutter is open. • Ensure that the lamp door is closed. If it is and the problem persists, replace the lamp. • Ensure that the HDMI output from the DHD Controller is properly connected to Input 2 (DVI) on the SC-1 (see Figure 3-13).
The display is on and menus appear, but there is no picture.	• Incorrect source selection. • Source component is not turned on. • Source component is connected incorrectly or not at all.	• Select the correct source. • Turn on the source component. • Check connections from source component to DHD Controller.
A projected image from a DVD is split or otherwise scrambled.	• DVD player is connected to the Component input and set to progressive scan mode.	• Turn off progressive scan on the DVD player. Or, connect the DVD player to the HD1 or HD2 input.
Image appears “squeezed” or vertically stretched into center of screen.	• Incorrect aspect ratio selection.	• Select a different aspect ratio.

Table 5-1. Troubleshooting Chart (continued)

Symptom	Possible Cause(s)	Solution
The display is jittery or unstable.	• Poor-quality or improperly connected source. • The horizontal or vertical scan frequency of the input signal may be out of range for the projector.	• Ensure that the source is properly connected and of adequate quality for detection. • Correct at the source.
Image is too bright and/or lacks definition in the bright areas of the image.	• Contrast is set too high.	• Lower the contrast setting.
Image appears “washed out” and/or dark areas appear too bright.	• Brightness is set too high.	• Lower the brightness setting.
Colors in the image are swapped; for example, reds appear blue or vice versa.	• The Red/Pr, Green/Y or Blue/Pb outputs from the source are connected to the wrong inputs on the DHD Controller.	• Ensure that the source outputs are connected to the correct DHD Controller input.
The display freezes suddenly.	• Excessive voltage noise on the AC or ground input has interrupted the projector’s ability to lock on to a signal.	• Power down the projector and disconnect from AC. Then, plug in again and power up as usual.
The projector will not turn back on after it was powered down, or the image disap-pears during operation.	• The projector will not turn on for several minutes after power-down, to protect the lamp. • The lamp has failed.	• Wait until the LED at the front of the DHD Controller turns red. • Replace the lamp.
AutoScope lens motor does not work.	• The motor is not plugged in and turned on, or the AC outlet is not active. • The motor is not connected to a trigger output on the DHD Controller. • Incorrect trigger assignment.	• Ensure that the motor is plugged in and turned on, and that the AC outlet is active. • Check the trigger connection between the lens motor and DHD Controller (Figure 3-18). • Correct the trigger assignment (refer to ***Configure Lens Motor Trigger*** on page 51).

Error Codes ➤ If the status code display on the back of the projector shows one of the following values, you have encountered a likely system error requiring the attention of a qualified service technician. Acknowledge and clear the error by pressing **EXIT** twice on the rear-panel keypad. Try resetting the projector by powering it off, allowing it to cool and powering it on again. Refer to Table 5-2 and contact your dealer if the problem persists.

The specific code number identifies the source of the error detected, and is particularly useful in cases where the projector is far away. For example, the code “27” means the lamp could not be turned on.

Table 5-2. SC-1 Error Codes

Code	Description
General	
12	Software bug. Contact dealer or Runco Technical Support.
13	CRC error in flash ROM. Download new software.
14	Engineering-only programming is complete. Contact Runco, replace TIPM.
15	Attempting to download code without being in boot mode.
16	Invalid interrupt. Power off/on. If it persists, contact dealer or Runco Technical Support.
17	User forced system to stay in boot mode.
18	Jumper for programming boot not installed.
Lamp Failures	
20	Lamp turned on unexpectedly (fault related to ballast).
22	One or more high-current lamp cables is not connected.
26	Lamp 1 Interlock: lamp door open, lamp not installed.
27	Can’t turn lamp on.
28	Lamp turned off unexpectedly.
29	Lamp ballast overheated.
2C	Lamp communications fault; ballast is not detected.

Note: *To clear a system error, press the **EXIT** key (on the SC-1 control panel) twice. If necessary, reset the projector by powering it off, allowing it to cool and powering it on again. Contact your Runco dealer or Runco technical support if the error persists.*

Table 5-2. SC-1 Error Codes (continued)

Code	Description
Power and Cooling	
40	Lamp has shut down due to fan failure.
46	Red DMD heat sink overheated.
47	Green DMD heat sink overheated.
48	Blue DMD heat sink overheated.
49	Prism overheated.
4C	Projector shutdown due to critical error.
4D	Integrator has overheated.
4E	Inadequate lamp air intake rate (interlock)
4F	Inadequate air exhaust rate (interlock)
53	Fan 3 has failed (side [rear] intake fan).
54	Fan 4 has failed (side [front] intake fan).
55	Fan 5 has failed (lamp exhaust fan).
56	Fan 6 has failed (LAD fan).
57	Fan 7 has failed (card cage fan).
58	Fan 8 has failed (heat exchanger fan — for liquid cooling system).
TIPM (Image Processor)	
60	Boot code CRC failed.
61	Unable to program DigMux PLD.
62	Unable to program Control PLD.
63	Unable to program Bubks PLD.
64	Unrecognized ROM type.
65	Write to flash ROM failed.
66	General TIPM failure.
67	Downloaded code will not fit into ROMs.
68	Communication error with scaler on TIPM.
Built-In Keypad	
70	Unable to access EEPROM on the built-in keypad.
71	EEPROM memory re-initialization on the built-in keypad.

Note: *To clear a system error, press the* ***EXIT*** *key (on the SC-1 control panel) twice. If necessary, reset the projector by powering it off, allowing it to cool and powering it on again. Contact your Runco dealer or Runco technical support if the error persists.*

Table 5-2. SC-1 Error Codes (continued)

Code	Description
Panel Driver and Formatter	
80	Unrecognized IRAM (panel driver).
81	Unable to program device on IRAM.
82	TI flash download failure.
83	TI flash download fault; partial success.
84	TI flash download fault; partial success.
85	TI-I2C write failure.
87	Consecutive faults from modular Formatters.
90	Red modular Formatter communication failure.
91	Green modular Formatter communication failure.
92	Blue modular Formatter communication failure.
93	Modular formatter architecture error.
94	Modular formatter/DMD mismatch.
95	Modular formatter sequence mismatch.
96	EFIB not responding to I2C messages.
Miscellaneous	
A0	Unable to program the optional interface module.
A1	Unable to power the optional interface module.
A2	Unable to program the Dual Slot Backplane Module (DSBP).
A3	Unable to program the optional Post Processing Module (Warp module).

Note: *To clear a system error, press the* ***EXIT*** *key (on the SC-1 control panel) twice. If necessary, reset the projector by powering it off, allowing it to cool and powering it on again. Contact your Runco dealer or Runco technical support if the error persists.*

6. Serial Communications

6.1 RS-232 Connection and Port Configuration

To interface the DHD Controller with a home theater automation/control system or a PC running terminal emulation software, connect it to your control system or PC as shown in Figure 3-18.

Configure the RS-232 controller or PC serial port as follows: no parity, 8 data bits, 1 stop bit and no flow control. Set the baud rate to 19200, to match that of the DHD Controller RS-232 port.

6.2 Serial Command Syntax

Serial commands to the DHD Controller take the following form:

- Commands are not case-sensitive.
- For a single command that takes no parameters, type the command followed by a carriage return; for example, to set the aspect ratio to Letterbox, type `LETTERBOX` **`<Enter>`**.
- For a single command that takes a parameter, type the command, a space or a comma and the desired value followed by a carriage return; for example, to set the brightness to -10, type `BRIGHTNESS -10` **`<Enter>`** or `BRIGHTNESS,-10` **`<Enter>`**.
- You can also send a string of multiple commands on a single line, separated by commas. For example, `COMPOSITE,BRIGHTNESS 100,ANAMORPHIC` **`<Enter>`** switches to the Composite video input, sets the brightness to 100 and sets the aspect ratio to Anamorphic. Command strings can be up to 255 characters long.

Note

Avoid combining the `ON` *or* `POWER 1` *commands with other commands on a single line. After sending* `ON` *or* `POWER 1,` *allow at least five (5) seconds for the DHD Controller to power up. If you have enabled the ISF splash screen (refer to* ***Splash Configure*** *on page 81), allow 15 seconds for the DHD Controller to power up.*

Once it does, it will accept and properly execute multiple serial commands.

Table 6-1 lists the RS-232 command set. The “Parameter (min/max)” column shows the valid parameter ranges, or “NA” for commands that take no parameters.

When you enter a valid command, the DHD Controller executes it and acknowledges it with a plus sign on the command line (+ >). When you enter an invalid command – one that is misspelled or followed by values outside the valid range for that command – the DHD Controller ignores it and returns a minus sign (- >).

Table 6-1. Serial Commands

Command	Parameter (min/max)	Value Stored?	Description
Power On/Off Commands			
OFF	NA	NA	Turns projector off
ON	NA	NA	Turns projector on
POWER	0/1	NA	Turns projector on and off
POWER?	NA	NA	Returns power status
Input Selection Commands			
COMPONENT	NA	YES	Selects the Component input
COMPOSITE	NA	YES	Selects the Composite video input
HDMI1	NA	YES	Selects the HDMI 1 input
HDMI2	NA	YES	Selects the HDMI 2 input
HD1	NA	YES	Selects the RGB HD 1 input
HD2	NA	YES	Selects the RGB HD 2 input
INPUT?	NA	NA	Returns active input
SVIDEO1	NA	YES	Selects the S-Video 1 input
SVIDEO2	NA	YES	Selects the S-Video 2 input

Table 6-1. Serial Commands (continued)

Command	Parameter (min/max)	Value Stored?	Description
Aspect Ratio Commands			
ANAMORPHIC	NA	YES	Selects the Anamorphic aspect ratio
ASPECT?	NA	NA	Returns current aspect ratio
ASPECTIN?	NA	NA	Returns the input source aspect ratio
ASPECTOUT?	NA	NA	Returns output screen size
CINEMA	NA	YES	Selects the Cinema aspect ratio
LETTERBOX	NA	YES	Selects the Letterbox aspect ratio
OUT169	NA	YES	Sets the output screen to 1.78:1 (16:9)
OUT235	NA	YES	Sets the output screen to 2.35:1
STANDARD	NA	YES	Selects the Standard (4:3) aspect ratio
VIRTUALWIDE	NA	YES	Selects the VirtualWide aspect ratio
VIRTUALCINEMA	NA	YES	Selects the Virtual Cinema aspect ratio
Picture Adjust Commands			
BRIGHTNESS	-100/100	YES	Sets a value for brightness
BRIGHTNESS?	NA	NA	Returns brightness setting value
CHROMADELAY	-12/12	YES	Sets a value for input color chroma delay
CHROMADELAY?	NA	NA	Returns input color chroma delay setting
COLOR	-100/100	YES	Sets a value for color
COLOR?	NA	NA	Returns color setting value
CONTRAST	-100/100	YES	Sets a value for contrast
CONTRAST?	NA	NA	Returns contrast setting value
FILMMODE	0/1	YES	Sets Film Mode off (0) or on (1)
FILMMODE?	NA	NA	Returns Film Mode setting (0 = off; 1 = on)
FILTER	0/15	YES	Sets a value for input color noise filter
FILTER?	NA	NA	Returns input color noise filter setting
PHASE	0/3	YES	Adjusts phase
PHASE?	NA	NA	Returns phase setting value
SHARPNESS	-6/6	YES	Sets a value for sharpness
SHARPNESS?	NA	NA	Returns sharpness setting value
TINT	-100/100	YES	Sets a value for tint
TINT?	NA	NA	Returns tint setting value

Table 6-1. Serial Commands (continued)

Command	Parameter (min/max)	Value Stored?	Description
Image Preset Commands			
CUSTOM1	NA	YES	Loads “Custom 1” image preset
CUSTOM2	NA	YES	Loads “Custom 2” image preset
DAY	NA	YES	Loads “ISF Day” image preset
NIGHT	NA	YES	Loads “ISF Night” image preset
PRESET?	NA	NA	Returns currently-selected preset (ISF Day, ISF Night, Custom 1 or Custom 2)
Input Position Commands			
IHEIGHT	-100/100	YES	Sets the value for input height
IHEIGHT?	NA	NA	Returns input height value
IHPOS	-100/100	YES	Sets a value for horizontal input position
IHPOS?	NA	NA	Returns input horizontal position value
IVPOS	-100/100	YES	Sets a value for vertical input position
IVPOS?	NA	NA	Returns input vertical position value
IWIDTH	-100/100	YES	Sets the value for input width
IWIDTH?	NA	NA	Returns input horizontal width value
OVERSCAN	0/10	YES	Sets the overscan percentage
OVERSCAN?	NA	NA	Returns overscan percentage
Output Shift Commands			
OHEIGHT	-100/100	YES	Sets the value for output height
OHEIGHT?	NA	NA	Returns output height value
OHPOS	-100/100	YES	Sets the value for output horizontal position
OHPOS?	NA	NA	Returns output horizontal position value
OVPOS	-100/100	YES	Sets the value for output vertical position
OVPOS?	NA	NA	Returns output vertical position value
OWIDTH	-100/100	YES	Sets the value for output width
OWIDTH?	NA	NA	Returns output horizontal width value

Table 6-1. Serial Commands (continued)

Command	Parameter (min/max)	Value Stored?	Description
Miscellaneous Commands			
BKGND	-100/100	YES	Sets the background color for letterbox or 4:3 aspect ratio (-100 = black; 100 = white)
BKGND?	NA	NA	Returns background setting value
DATE?	NA	NA	Returns software release date
DISPLAY?	NA	NA	Returns display device input source value
HDINPUTRES	NA	YES	Sets YPbPr input resolution and refresh rate for HD1/HD2, as follows: 0 = 480i 1 = 480p 2 = 576i 3 = 576p 4 = 720p / 60 Hz 5 = 1080i / 60 Hz 6 = 720p / 50 Hz 7 = 1080i / 25 Hz Any other value = Auto
HDMI1080IBYPASS	0/1	YES	Sets Digital (1080i) Bypass off (0) or on (1)
HWVER?	NA	NA	Returns hardware version number
INRES?	NA	NA	Returns input resolution
LENS1?	NA	NA	Returns Lens 1 configuration
LENS2?	NA	NA	Returns Lens 2 configuration
SWVER?	NA	NA	Returns software version number
TRIGGER	1/3	YES	Assigns trigger to currently-selected aspect ratio

Table 6-1. Serial Commands (continued)

Command	Parameter (min/max)	Value Stored?	Description
The following serial commands are meant to emulate buttons on the remote control or DHD Controller front panel. Each button has its own serial command, so effectively it is as if you were using the IR remote only you'll be doing so via serial commands. These commands provide active OSD responses just like the IR remote.			
DOWN	NA	NA	Down-Arrow (▼) key
ENTER	NA	NA	**ENTER** key
LEFT	NA	NA	Left-Arrow (◀) key
MENU	NA	NA	**MENU**
RIGHT	NA	NA	Right-Arrow (▶) key
UP	NA	NA	Up-Arrow (▲) key

7. Specifications

7.1 SC-1 Specifications

Table 7-1 lists the SC-1 specifications.

Table 7-1. SC-1 Specifications

Projector Type:	Digital Light Processing (DLP), 3-chip, SuperOnyx DMD
Native Resolution:	2048 x 1080 (1.90 native aspect ratio)
Aspect Ratios:	Refer to Table 7-2
Video Standards:	Refer to Table 7-2
DTV Compatibility:	480p, 720p, 1080i
Scan Frequency:	Horizontal: 15 kHz to 120 kHz Vertical: 23.97 Hz to 150 Hz
Picture Size (16:9 Screen):	Recommended width = 72 to 480 in.
Throw Distance (Factor x Screen Width):	Refer to Table 3-3
Horizontal and Vertical Offset:	Horizontal: • 20% of screen width left or right (1.78:1 screen) • 17% of screen width left or right (1.90:1 screen) Vertical: • 43% of screen height up or down
Lamp Type:	2.0-kW Short-arc Xenon lamp module
Estimated Lamp Life:	1,000 hours
Inputs (from DHD Controller):	(1) DVI-I with HDCP (1) RS-232
Other Inputs (currently not used):	(1) RS-422 (1) Composite Video (1) Component Video (1) S-Video
Controls:	• Built-in keypad • IR remote • Serial commands via RS-232 (from DHD Controller)

Table 7-1. SC-1 Specifications (continued)

Brightness and Contrast:	**Cinema Standards Measurement System (CSMS) Specifications** - Brightness (with 2.0-kW lamp): 331.0 foot-Lamberts (fL) - Contrast Ratio (with 2.0-kW lamp): 243:1 - 485:1 These measurements are taken from the projector in a controlled, home theater environment. All measurements are made to ANSI/NAPM IT7.228-1997 specifications using the Photo Research PR-650 SpectraColorimeter and Minolta LS-100 Luminance Meter, Video Essentials test DVD and a 1.3 gain, 72-inch wide screen. The projector is calibrated to a color temperature of 6,500K and has a minimum of 150 hours of usage. The foot-Lambert (fL) is the unit of measurement used in commercial movie theaters to express image brightness at the screen surface. The Society of Motion Picture and Television Engineers (SMPTE) specifies 16 fL as the target image brightness for film-based projectors using an open gate (without film in the projector). More importantly, today SMPTE specifies 12 fL as the target image brightness in Digital Cinema theaters. The foot-Lambert measurement is dependent on screen size, screen gain and projector light output. **Home Theater Calibration Specifications** - Light Output (with 2.0-kW lamp): 6887 ANSI Lumens - Contrast Ratio (with 2.0-kW lamp): 243:1 - 485:1 These specifications are obtained by calibrating the projector as described above for CSMS measurements. **Industry-Standard Specifications** - 9000 ANSI Lumens, minimum, with 2.0-kW lamp - Contrast Ratio: 1500:1 - 2800:1 These are typical projector brightness and contrast specifications found in most companies' sales literature. Runco includes these measurements in its literature to allow for direct comparison with other manufacturers' projectors. These measurements are typically taken at 9,000K to 13,000K to get expected performance data when the projector is used in professional, commercial and industrial displays.
Power Requirements:	200 to 240 VAC, 50/60 Hz, 30 Amps
Operating Environment:	41°F to 95°F (5°C to 35°C), 20% to 80% humidity (non-condensing) External Cooling Requirement: 600 CFM, minimum
Dimensions:	See Figure 7-1 and Figure 7-2
Weight (without lens):	342 lbs. (155.1 kg)
Regulatory Approvals:	Complies with FCC, CE C-Tick
Limited Warranty:	Projector: Two (2) years parts and labor from the date of delivery to the end user. Lamp: 1000 hours or six (6) months, whichever comes first.

Specifications are subject to change without notice.

7.2 DHD Controller Specifications

Table 7-2 lists the DHD Controller specifications.

Table 7-2. DHD Controller Specifications

Aspect Ratios:	4:3, Letterbox, 16:9 Anamorphic, VirtualWide, Cinema, Virtual Cinema
Video Standards:	NTSC, PAL
Inputs:	(1) Composite; (2) S-Video; (1) Component; (2) HD-R (Pr), G (Y), B (Pb), H, V; (2) HDMI with HDCP
Output:	HDMI with HDCP
Control Options:	- Discrete infrared remote - Serial commands via RS-232 - Front-panel controls
RS-232 Communication Parameters:	19200 bps, no parity, 8 data bits, 1 stop bit, no flow control
Trigger Outputs:	(3) +12 VDC, each rated at 750 mA and thermal fuse-protected
Bandwidth:	150 Mega Samples per Second (MSPS)
Power Requirements:	100 to 240 VAC (auto-sensing), 50/60 Hz, 160 watts
Operating Environment:	41°F to 95°F (5°C to 35°C), 0% to 90% humidity (non-condensing)
Dimensions:	Width = 17.50 inches (444.5 mm) Depth = 11.19 inches (284.1 mm) Height = 3.75 inches (95.3 mm)
Weight:	13.0 lbs. (5.90 kg)
Regulatory Approvals:	Complies with FCC, CE C-Tick
Limited Warranty:	Two (2) years parts and labor from the date of delivery to the end user.
Specifications are subject to change without notice.	

7.3 SC-1 Dimensions

Figure 7-1 and Figure 7-2 show the SC-1 dimensions (all dimensions are in inches).

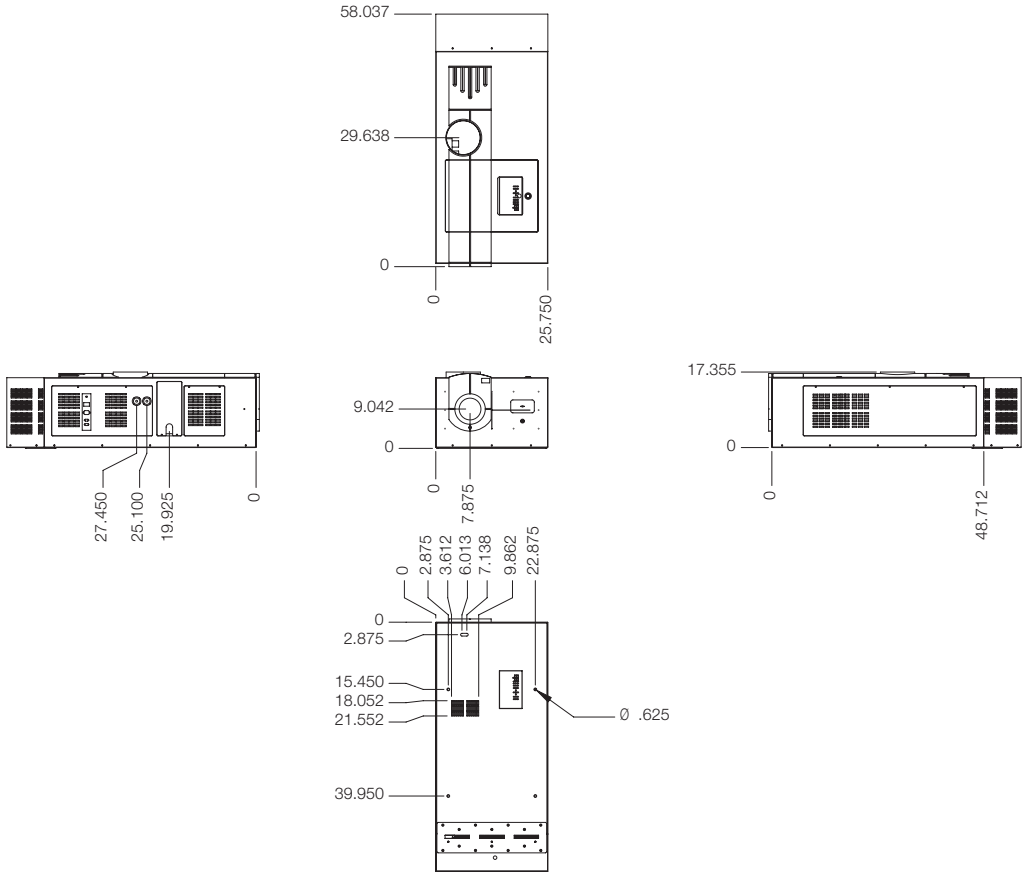

Figure 7-1. SC-1 Dimensions (with Built-In Power Supply/Lamp Ballast)

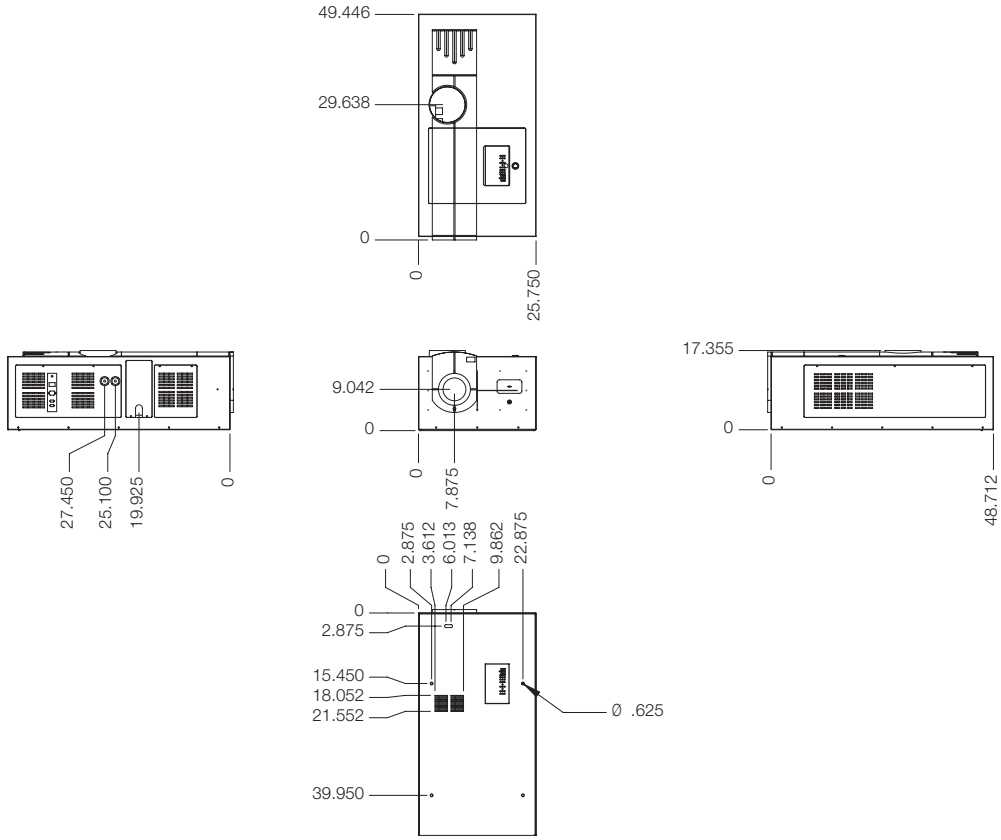

Figure 7-2. SC-1 Dimensions (without Built-In Power Supply/Lamp Ballast)

Notes:

SERIAL NUMBER

RUMA-011105
rev 06-06-07 v3.0

Runco International • 2900 Faber Street • Union City, CA 94587 • Ph (510) 324-7777 / (800) 23RUNCO / Fax (510) 324-9300
www.runco.com