myprojectorlamps.com

The most trusted, dependable name in projector lamp sales.

http://www.myprojectorlamps.com

http://www.myprojectorlamps.ca

http://www.myprojectorlamps.eu

The following projector manual has not been modified or altered in any way.

INSTALLER/INTEGRATOR MANUAL

CineWall™ CW-95DHD

Full-HD, 2.35:1 In-Wall Display
and Digital High Definition (DHD™) Controller/Scaler/Processor

RUNCO

THE WORLD'S FINEST HOME THEATER PRODUCTS™

Online Product Registration and Warranty

To register your Runco product and obtain information about warranty and service offerings, please visit http://www.runco.com/info.html.

COPYRIGHT AND TRADEMARKS:

© Copyright 2009 Runco International, LLC ("Runco"). This document contains proprietary information protected by copyright, trademark and other intellectual property laws. All rights are reserved. No part of this manual may be reproduced by any mechanical, electronic or other means, in any form, without prior written permission of Runco.

The trademarks reproduced in this Runco Owner's Manual and used on the Runco Products are either owned by Runco or are licensed by Runco. You may not reproduce or use the trademarks without the prior written consent of Runco.

Runco Products are manufactured under one or more of the following patents: US. Patent 6755540 and Other Patents Pending.

Important Safety Instructions

Thank you for your purchase of this quality Runco video product! It has been designed to provide you with the quality of video that is expected in a home theater. For the best performance, please read this manual carefully as it is your guide through the menus and operation.

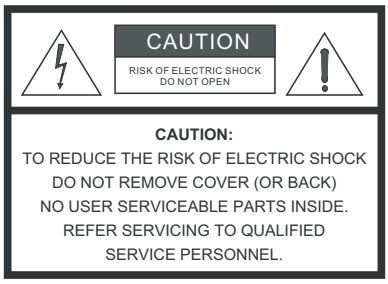

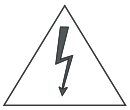

WARNING
This symbol is intended to alert the user to the presence of uninsulated “dangerous voltage” within the product’s enclosure that may be of sufficient magnitude to constitute a risk of electric shock.

This symbol is intended to alert the user to the presence of important operating and maintenance (servicing) instructions in the literature accompanying the appliance.

1. Read these instructions.
2. Keep these instructions.
3. Heed all warnings.
4. Follow all instructions.
5. Do not use this apparatus near water.
6. Clean only with a dry cloth.
7. Do not block any of the ventilation openings. Install in accordance with the manufacturer’s instructions.
8. Do not install near any heat sources such as radiators, heat registers, stoves, or other apparatus (including amplifiers) that produce heat.
9. Do not defeat the safety purpose of the polarized or grounding type plug. A polarized plug has two blades with one wider than the other. A grounding type plug has two blades and a third grounding prong. The wide blade or the third prong is provided for your safety. When the provided plug does not fit into your outlet, consult an electrician for the replacement of the obsolete outlet.
10. Protect the power cord from being walked on or pinched particularly at plugs, convenience receptacles and the point where they exit from the apparatus.
11. Only use the attachments/accessories specified by the manufacturer.
12. Use only with a cart, stand, tripod, bracket or table specified by the manufacturer or sold with the apparatus. When a cart is used, use caution when moving the cart/apparatus to avoid injury from tip-over.

13. Unplug this apparatus during lightning storms or when unused for long periods of time.
14. Refer all servicing to qualified service personnel. Servicing is required when the apparatus has been damaged in any way, such as power supply cord or plug is damaged, liquid has been spilled or objects have fallen into the apparatus, the apparatus has been exposed to rain or moisture, does not operate normally, or has been dropped.
15. Keep the packing material in case the equipment should ever need to be shipped.
16. The lamp becomes extremely hot during operation. Allow the display to cool down for approximately 45 minutes prior to removing the lamp assembly for replacement.
17. Do not operate lamps beyond the rated lamp life. Excessive operation of lamps beyond rated life could cause them to explode in rare occasions.
18. Never look directly into the lens when the lamp is on.

Compliance Information

DECLARATION OF CONFORMITY:

Manufacturer's Name: Runco International, LLC

Manufacturer's Address: 1195 NW Compton Drive, Beaverton, OR 97006-1992

hereby declares that the Products' Model Numbers:

CineWall™ CW-95DHD

conform with the provisions of:

Council Directive 2004/108/EC on Electromagnetic Compatibility;

EN 55022 "Limits and methods of measurements of radio interference characteristics of information technology equipment" 1998;

EN 55024 "Limits and methods of measurements of immunity characteristics of information technology equipment" 1998;

Including:

- EN 61000-4-2 "Electromagnetic compatibility (EMC) Part 4: Testing and measurement techniques Section 2: Electrostatic discharge immunity test"
- EN 61000-4-3 "Electromagnetic compatibility (EMC) Part 4: Testing and measurement techniques Section 3: Radiated, Radio-Frequency, Electromagnetic Field Immunity Test"
- EN 61000-4-4 "Electromagnetic compatibility (EMC) Part 4: Testing and measurement techniques Section 4: Electrical fast transient/burst immunity test"
- EN 61000-4-5 "Electromagnetic compatibility (EMC) Part 4: Testing and measurement techniques Section 5: Surge immunity test"

Note *During high-voltage spikes in AC power, this product's surge protection circuit may require re-starting the unit. This behavior is normal.*

- EN 61000-4-6 "Electromagnetic compatibility (EMC) Part 4: Testing and measurement techniques Section 6: Conducted disturbances induced by radio-frequency fields immunity test"
- EN 61000-4-8 "Electromagnetic compatibility (EMC) Part 4: Testing and measurement techniques Section 8: Conducted disturbances induced by power frequency magnetic fields immunity test"
- EN 61000-4-11 "Electromagnetic compatibility (EMC) Part 4: Testing and measurement techniques Section 11: Voltage dips, short interruptions and voltage variations immunity tests"

And:

- EN 61000-3-2 “Electromagnetic compatibility (EMC) Part 3, Section 2: Limits for harmonic current emissions (equipment input current up to and including 16 A per phase)” 2000;
- EN 61000-3-3 “Electromagnetic compatibility (EMC) Part 3, Section 3: Limitations of voltage changes, voltage fluctuations and flicker in public low-voltage supply systems, for equipment with rated current up to and including 16 A and not subject to conditional connection” 1995;

Council Directive 2006/95/EC and amended by M1 and C1 on Low Voltage Equipment Safety;

EN 60950 “Safety of information technology equipment, including electrical business equipment”

The Technical Construction file required by this Directive is maintained at the corporate headquarters of Runco International, LLC, located at 1195 NW Compton Drive, Beaverton, OR 97006-1992.

Date of Declaration: March 2009

FCC PART 15:

NOTE: This equipment has been tested and found to comply with the limits for a Class B digital device, pursuant to Part 15 of the FCC Rules. These limits are designed to provide reasonable protection against harmful interference in a residential installation.

This equipment generates, uses and can radiate radio frequency energy and, if not installed and used in accordance with the instructions, may cause harmful interference to radio communications. However, there is no guarantee that interference will not occur in a particular installation. If this equipment does cause harmful interference to radio or television reception, which can be determined by turning the equipment off and on, the user is encouraged to try to correct the interference by one or more of the following measures:

- Reorient or relocate the receiving antenna.
- Increase the separation between the equipment and receiver.
- Connect the equipment into an outlet on a circuit different from that to which the receiver is connected.
- Consult the dealer or an experienced radio/TV technician for help.

INDUSTRY CANADA (ICES-003):

This Class B digital apparatus complies with Canadian ICES-003.

Cet appareil numérique de la classe B est conforme à la norme NMB-003 du Canada.

PRODUCT DISPOSAL:

The Product contains small amounts of tin, lead and/or mercury. Disposal of these materials may be regulated due to environmental considerations.

IMPORTANT RECYCLE INSTRUCTIONS

Lamp(s) inside this product contain mercury. This product may contain other electronic waste that can be hazardous if not disposed of properly. Recycle or dispose in accordance with local, state, or federal Laws.

For more information, contact the Electronic Industries Alliance at WWW.EIAE.ORG.

For lamp specific disposal information check WWW.LAMPRECYCLE.ORG.

DISPOSAL OF OLD ELECTRICAL AND ELECTRONIC EQUIPMENT (Applicable throughout the European Union and other European countries with separate collection programs)

This symbol found on your product or on its packaging, indicates that this product should not be treated as household waste when you wish to dispose of it. Instead, it should be handed over to an applicable collection point for the recycling of electrical and electronic equipment. By ensuring this product is disposed of correctly, you will help prevent potential negative consequences to the environment and human health, which could otherwise be caused by inappropriate disposal of this product. The recycling of materials will help to conserve natural resources. This symbol is only valid in the European Union. If you wish to discard this product, please contact your local authorities or dealer and ask for the correct method of disposal.

Table of Contents

Important Safety Instructions ..... **iii**

Compliance Information ..... **iv**

1. Introduction **1**

About This Manual 1

Target Audience 1

If You Have Comments About This Manual... 1

Textual and Graphic Conventions 1

Using This Manual 2

Description, Features and Benefits 3

Key Features and Benefits 4

Parts List 4

Required Personnel, Tools and Materials 4

2. System Description **5**

Chassis Assembly 5

Input Connectors and LEDs 6

Screen Assembly 6

Chassis Installation Brackets 7

Other System Components 8

DHD Controller Front Panel 8

DHD Controller Rear Panel 10

Outputs 10

Inputs 10

CineWall Remote Control Unit 11

3. Installation Preparation **15**

Site Requirements 15

Infrastructure 15

Power Requirements 16

Site Access 16

Audio/Video Synchronization Issues 17

Additional Considerations 18

Unpacking and Inspecting 19

Site Preparation 21

4. Installation 25
Overview 25
Mounting the CineWall Chassis 26
Install Top Flange and Bottom Brackets on Chassis Assembly 26
Install Chassis Assembly into Wall 27
Secure Chassis to Wall 27
Installing the Screen 30
Powering Up the CineWall 33
Connecting the CineWall to AC Power 33
Aligning the Image 34
Connections to the CineWall 35
Connecting the CineWall to the DHD Controller 36
Connecting Source Components to the DHD Controller 38
RS-232 Controller Connection 43
Connecting 12-volt Trigger Outputs to External Equipment 44
Connecting an External IR Receiver to the DHD Controller 45
Installing Batteries in the DHD Controller Remote Control 46
Notes on Batteries 46
Notes on Remote Control Operation 46
Powering Up the CineWall and DHD Controller 47
Connecting the DHD Controller to AC Power 47
5. Operation 49
On-Screen Display (OSD) Menus 49
Main Menu 50
Input Source 51
Aspect Ratio 51
Picture 56
Input Position 61
Memory Presets 63
Information 64
Calibration 64
Service 68
6. Maintenance and Troubleshooting 73
Cleaning 73
Cleaning the Screen, Mirrors and Lens 73
Where is the dirt? 74

Lamp Replacement 75
Removing the Old Lamp 75
Installing the New Lamp 76
Resetting Lamp Hours 76
How to Maintain Lamp Life 76
Filter Replacement 76
Determining a Changing Schedule 76
Removing the Air Filter 77
Troubleshooting Tips 77
Status LEDs 77
Isolating Faulty Parts 78
7. Serial Communications 81
RS-232 Connection and Port Configuration 81
Serial Command Syntax 81
8. Specifications 87
CineWall Specifications 87
DHD Controller Specifications 88
Dimensions 89
Supported Timings 90

Notes:

List of Figures

2-1. Chassis Installation Brackets 7
2-2. DHD Controller Front Panel 8
2-3. DHD Controller Rear Panel 10
2-4. DHD Controller/CineWall Remote Control 11
4-1. Installing the Top Flange and Bottom Brackets 26
4-2. CineWall Screen Assembly – Rear View 30
4-3. Connecting the CineWall to the DHD Controller 36
4-4. RS-232 Connection from the DHD Controller to the CineWall 37
4-5. HDMI Source Connections 38
4-6. Component Video Source Connections 39
4-7. RGBHV Source Connections 40
4-8. SCART RGBS Source Connections 41
4-9. S-Video and Composite Video Source Connections 42
4-10. RS-232 Control System Connection 43
4-11. Connecting 12-volt Trigger Outputs 44
4-12. External IR Receiver Connection 45
4-13. Available Range of the Remote Control 46
5-1. CineWall OSD Menu Structure 49
5-2. Typical PLUGE Pattern for Adjusting Brightness 56
5-3. Typical Gray Bar Pattern for Adjusting Contrast 57
5-4. Typical Color Bar Pattern for Adjusting Color Saturation and Tint 58
5-5. Typical Test Pattern for Adjusting Sharpness 60
5-6. Overscan Modes 62
5-7. CIE 1931 Chromaticity Diagram 65
8-1. CineWall CW-95HD Dimensions 89

Notes:

1. Introduction

1.1 About This Manual

This Owner's Manual describes how to install, set up and operate a Runco CineWall™ Full HD, In-Wall Display and DHD Controller.

Throughout this manual, the Runco CineWall™ Full HD, In-Wall Display and DHD Controller is referred to as the "CineWall."

Target Audience

Runco has prepared this manual to help home theater installer/integrators safely install and optimize the performance of the CineWall.

Runco has made every effort to ensure that this manual is accurate as of the date it was printed. However, because of ongoing product improvements and customer feedback, it may require updating from time to time. You can always find the latest version of this and other Runco product manuals on-line, at www.Runco.com.

If You Have Comments About This Manual...

Runco welcomes your comments about this manual. Send them to techpub@runco.com.

Textual and Graphic Conventions

Text Conventions: The following conventions are used in this manual, in order to clarify the information and instructions provided:

- Remote control button identifiers are set in upper-case bold type; for example, "Press **EXIT** to return to the previous menu."
- Computer input (commands you type) and output (responses that appear on-screen) is shown in monospace (fixed-width) type; for example: "To change the aspect ratio to Letterbox, type `LETTERBOX` **`<Enter>`**."
- All keys with functional names are initial-capped, set in bold type and enclosed in angle brackets. These keys are the following: **`<Enter>`**, **`<Spacebar>`**, **`<Control>`**, **`<Esc>`** and **`<Tab>`**.
- **`<Enter>`** indicates that you may press either the RETURN or ENTER key on your computer keyboard if it has both keys.

In addition to these conventions, underlining, boldface and/or italics are occasionally used to highlight important information, as in this example:

Note *A carriage return **must** be used after each command or string.*

Graphic Conventions: These symbols appear in numerous places throughout the manual, to emphasize points that you must keep in mind to avoid problems with your equipment or injury:

Tip	*TIPS highlight time-saving short cuts and helpful guidelines for using certain features.*
Note	*NOTES emphasize text with unusual importance or special significance. They also provide supplemental information.*
Caution	*CAUTIONS alert users that a given action or omitted action can degrade performance or cause a malfunction.*
WARNING	*WARNINGS appear when a given action or omitted action can result in damage to the equipment, or possible non-fatal injury to the user.*
DANGER!	*DANGER appears when a given action can cause severe injury or death.*

1.2 Using This Manual

Use the following table to locate the specific information you need in this manual.

If you need...	... Turn to page:
General information about the CineWall™ Full HD, In-Wall Display and DHD Controller	3
Installation preparation guidelines	15
Installation instructions	25
First-time configuration instructions	49
Instructions for using the on-screen menus	61
Maintenance and troubleshooting and information	73
Information on using serial commands	81
Specifications for the CineWall™ Full HD, In-Wall Display and DHD Controllers	86

1.3 Description, Features and Benefits

Runco, the leading brand in luxury video solutions, proudly announces its new CineWall™ CW-95DHD in-wall video display, which offers custom home theater design and installation professionals new levels of installation versatility and convenience while achieving full-HD imagery perfection.

Combining the best of front projection's exceptional image with the aesthetic of a giant flat-screen display, the CineWall provides a high-performance, in-wall display solution for rooms of distinction where high ambient lighting conditions exist, but nothing less than an exceptional Runco cinema experience will suffice.

The CineWall combines an advanced, high-contrast ambient light-rejecting screen with cinema-grade optics and a powerful display engine in a single, self-contained system. It is designed for quick and easy installation into a dedicated, framed wall with a large opening.

Designed exclusively for discriminating tastes, the CineWall is offered with Runco's proprietary external DHD™ video controller/processor/scaler. The DHD not only incorporates Runco's exclusive advanced Vivix III™ digital video processing technology to achieve the highest level of image fidelity, but it also enhances standard-definition digital and NTSC content to near high-definition quality.

The CineWall features Runco's SuperOnyx™ DMD™ chipset with ConstantContrast™ frame-by-frame contrast correction to provide stellar black levels and rich color saturation even in bright ambient light viewing. Runco's exclusive CinOptx™ lens system incorporates O-Path™ light path enhancement for sharp-looking video.

In addition to wider viewing angles with increased brightness and colorimetry consistencies, the CineWall provides significant technology and video quality enhancements when compared to like-sized plasma or LCD products. The system's passive cooling allows for virtually silent operation and uses 80 per cent less energy than comparably-sized flat panels.

The CineWall has been engineered to comply with Imaging Science Foundation™ (ISF) standards for maximum home theater image quality. Runco's sophisticated parameters for white balance and color gamut control have also been implemented for precise balance of gray scale and color. The CineWall incorporates Runco-proprietary de-interlacing technology that provides exceptional scaling and film-to-video (3:2 pulldown) conversion for the most artifact-free images possible.

Discrete IR and RS-232 control make custom installation seamless, while discrete source and aspect ratio selection accommodate any automation control system.

Key Features and Benefits ➤

The CineWall offers these key features and benefits:

- Native Resolution: 1920 x 817 (2.35:1 Native Aspect Ratio)
- Screen Size: 95-inch diagonal measure (approximately 88.75 inches wide by 37.88 inches high)
- 156/180W UHP-type Lamp, 6000-hour median life
- ConstantContrast™ provides for infinitely variable adjustment of the light path through the optics, enabling the perfect balance of black and white levels for any type of video source material

Parts List ➤

Your CineWall is shipped with the following items. If any items are missing or damaged, please contact your Runco dealer or Runco Customer Service at (800) 23-RUNCO.

- CineWall™ Full HD, In-Wall Display and DHD Controller:
  - Chassis Assembly
  - Screen Assembly
  - Controller
- DHD Controller Remote Control Unit and two (2), AAA-size batteries
- Setup Remote Control Unit and two (2), AAA-size batteries
- Two (2) AC Power Cords (North America), 1.83 meters (6.0 feet)
- Communication Cable, RJ-11 Male to RJ-45 Male, 20 feet (part number 175-0686-00)
- Rack-mount hardware for the DHD Controller
- CineWall™ Installer/Integrator Manual (this document)

1.4 Required Personnel, Tools and Materials

Installing the CineWall requires the following personnel, tools and materials:

- Two or more people familiar with complex mechanical installations. **Only authorized, Runco Academy-trained dealers should install the CineWall.**
- Circular saw
- Drywall saw (if the wall is finished with drywall)
- Drill with ¼” bit
- Screwdrivers
- Socket and crescent wrenches (various sizes)
- Level
- Tape measure
- Stud sensor
- Wood screws, bolts, nails, washers and other hardware, as dictated by the installation method
- AVIA or Digital Video Essentials test DVD (or equivalent), for calibrating individual inputs/sources

2. System Description

This section briefly describes the various CineWall system components.

2.1 Chassis Assembly

The Chassis Assembly is a sheet metal assembly that contains all of the active components of the CineWall, as shown below.

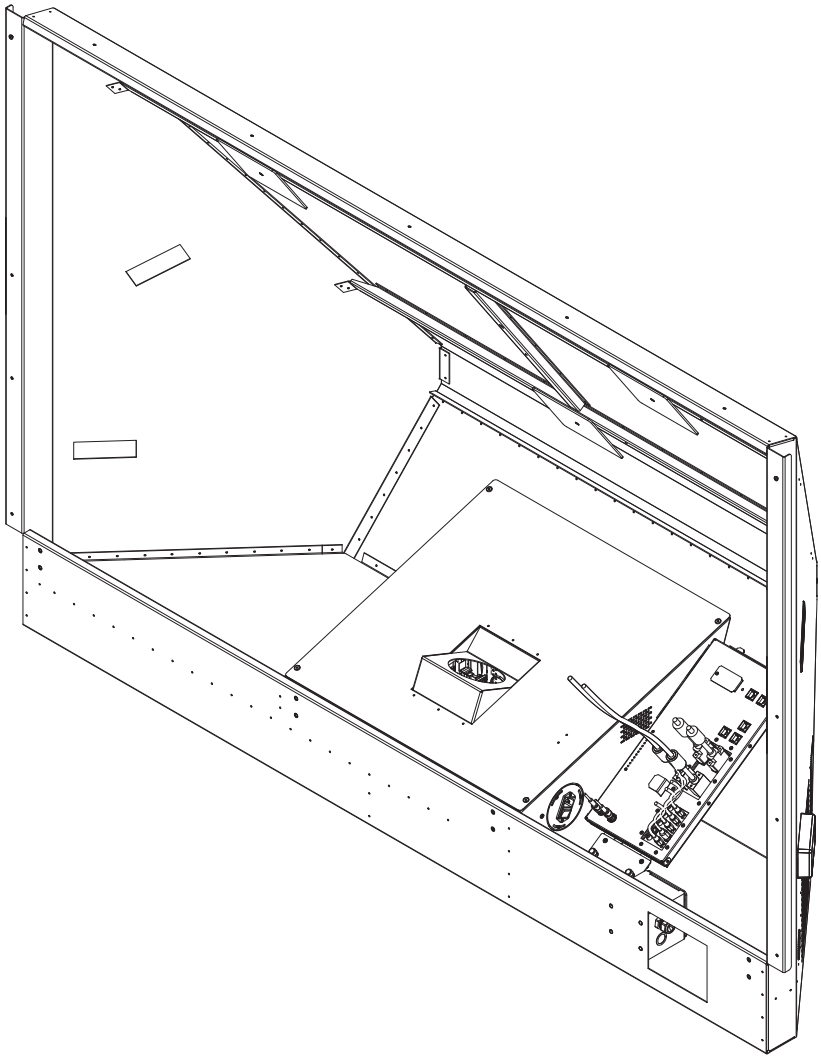

The lower middle section of the chassis assembly contains all of the active components described below. A fold mirror mounted at the rear of the chassis reflects light from the display engine. Several sets of handles are provided on the chassis to aid installation. The outer handles are for carrying the unit to the installation wall; the inner handles are for lifting the unit up and into the wall opening.

Display Engine: The display engine mounts directly to a shelf in the center bottom of the chassis that makes up a plenum for intake air.

Input Connectors and LEDs ➤

The CineWall interface board is equipped with the following input connectors and LED indicators:

1. **RS-232 (RJ-45)**
   Connect the **Display Control** output on the DHD Controller to this input (see Figure 2-3).
2. **DIGITAL (DVI)**
   Not used.
3. **DIGITAL (HDMI)**
   HDCP-compliant digital video input. Connect the **HDMI** output from the DHD Controller to this input.
4. **ANALOG (RGB)**
   Not used.
5. **STATUS LEDs**
   These provide information about the current state of various CineWall system components. For information on how to interpret them, refer to ***Status LEDs*** on page 77.
6. **COMPONENT**
   Not used.
7. **S-VIDEO**
   Not used.
8. **COMPOSITE**
   Not used.

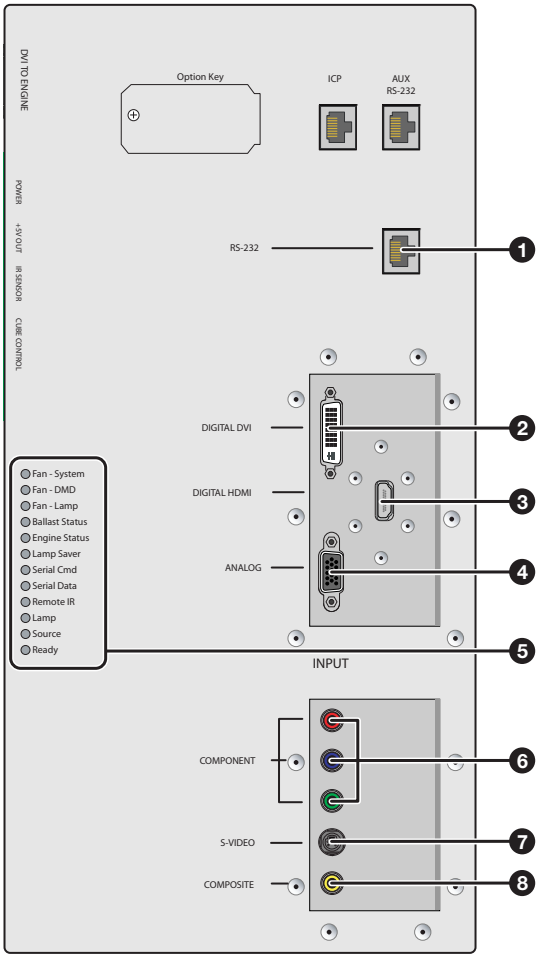

2.2 Screen Assembly

The Screen Assembly comprises all of the components associated with the screen which is attached on the outer side of the installation wall. The Screen Assembly is packaged separately from the Chassis Assembly, to facilitate unpacking and installation. Southco-type latches at the bottom of the screen secure the screen in the closed position.

A hinge system is provided at the top of the screen assembly that interfaces to the top flange of the chassis assembly. This hinge allows the screen assembly to be “hooked” from the top during initial installation. Two, small retaining brackets attach to the top rear of the screen frame. These prevent the screen from “hopping” out of the hinge hook and thus secure the screen.

2.3 Chassis Installation Brackets

To reduce the overall depth of the chassis assembly for shipping, the installation brackets that secure the chassis and screen to the wall are packaged separately. These brackets are installed at the customer site right before installing the chassis assembly into the wall opening:

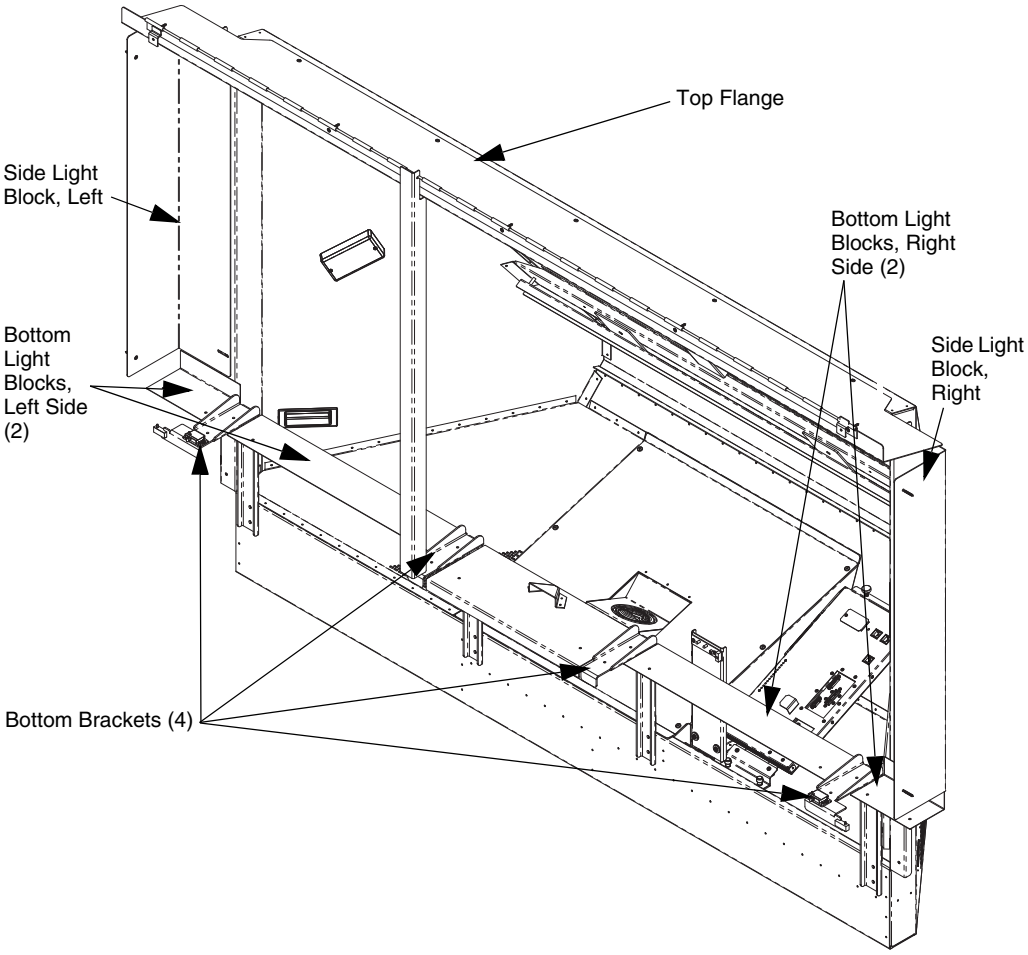

Figure 2-1. Chassis Installation Brackets

Bottom Brackets: The bottom brackets support all of the weight of the chassis assembly, and provide a pivot point while the chassis is “rotated into” the wall opening. Once installed, these can be screwed into the wall opening with sheet rock screws.

Top Flange: The top flange locks the top of the chassis into position and stops the rotation of the chassis as it is being installed. An installation tool is provided to set the exact distance between the bottom brackets and the top flange, as this is a critical dimension. Shims can be used along the top of the flange if necessary to compensate for any wall irregularities.

Bottom and Side Light Blocks: Light blocks at the bottom and sides of the screen complete the chassis-wall-screen interface. These are installed right before installing the screen, and minimize stray light leakage from behind the screen.

2.4 Other System Components

Power Supply: The Power Supply converts incoming 100-240 VAC power to the internal working voltages required by the lamp ballast, video processor and other system components. A switch is provided to connect or disconnect the system from the AC power source.

Cooling Fans: Cooling of the CineWall is accomplished by a combination of forced air and radiant cooling. The power supply is cooled by its own integral fans.

Cover: The center chamber of the chassis where all the active components are housed is covered by an interlocked sheet metal cover, secured by several quarter-turn screws. Removing this cover exposes all the serviceable parts, including the display engine, the lamp system, the power supply and the interface electronics. This cover is electrically interlocked so that the lamp and 380V supply cannot be activated while the cover is open.

Air Filter: As mentioned above, the air filter is installed in the plenum at the bottom center of the chassis. This filter can be accessed and replaced by a service person by opening the screen and reaching in to replace it. The air filter is Runco part number 379-0012-00.

Fold Mirror: The fold mirror reflects light from the display engine and directs it towards the screen. This fold mirror is mounted using a three-point mount system. Three large (5”x5”) mirror mounts and adhesive pads are used along with springs to provide an adjustable mounting scheme. Four safety catches secure the fold mirror in place, in case of adhesive failure of the mirror mounts.

The fold mirror is mounted to hat sections on the slant back wall of the chassis. The mirror is calibrated at the factory, and is not intended to be adjusted in the field.

2.5 DHD Controller Front Panel

Figure 2-2 shows the controls and indicators on the DHD Controller front panel; the paragraphs that follow describe them.

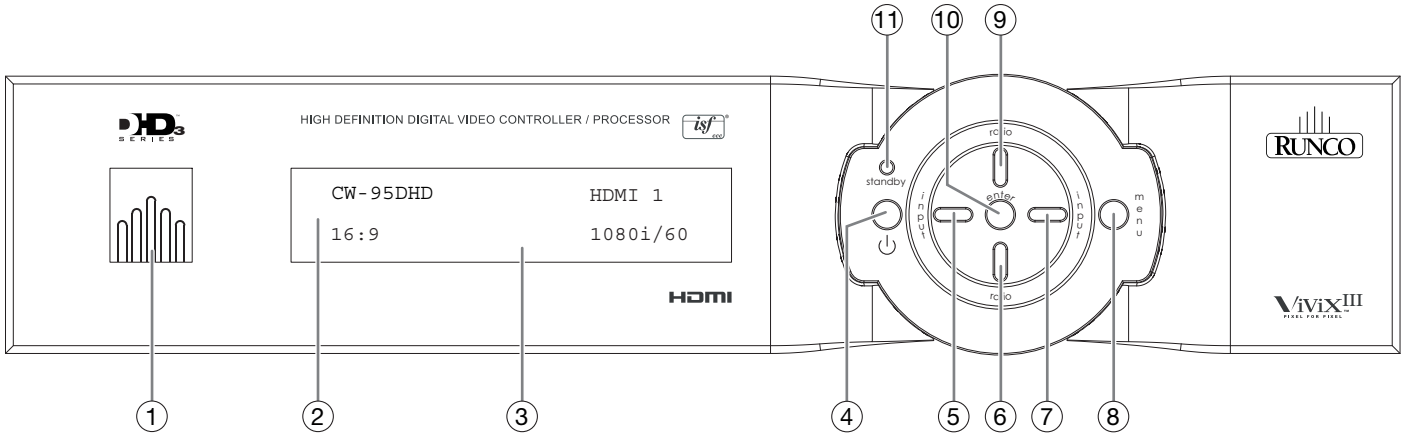

Figure 2-2. DHD Controller Front Panel

1. **RUNCO ICON**
   Lights blue to indicate that the controller is on or powering up.
2. **IR SENSOR**
   Receives IR commands from the remote control.
3. **VACUUM FLUORESCENT DISPLAY**
   Can be used instead of the On-Screen Display (OSD). Displays currently-selected menu or – if no menu is selected – the connected display device model, current source, input resolution and aspect ratio.
4. **ON/STANDBY BUTTON**
   Press once to toggle from standby mode to on mode. Press it again to return to standby mode. For a discrete on or off command, you can use the direct access buttons on the remote control.
5. **LEFT BUTTON**
   Used to direct-select inputs or move the menu cursor left in the OSD. When no menu is present on-screen, the **LEFT** button toggles through the different sources, in this order:
   HDMI 2 - HDMI 1 - SCART - HD 2 - HD 1 - Component - S-Video 2 - S-Video 1 - Composite Video
6. **DOWN BUTTON**
   Use to direct-select aspect ratios or move the menu cursor down in the OSD. When no menu is present on-screen, this button toggles through the different aspect ratios, in this order:
   16:9 - 4:3 - Letterbox - VirtualWide - Cinema - Virtual Cinema - Native
7. **RIGHT BUTTON**
   Used to direct-select inputs or move the menu cursor right in the OSD. When no menus are present on-screen, the **RIGHT** button toggles through the different sources, in this order:
   Composite Video - S-Video 1 - S-Video 2 - Component - HD 1 - HD 2 - SCART - HDMI 1 - HDMI 2
8. **MENU BUTTON**
   Press the **MENU** button to bring up the main menu, or to exit the current menu and return to the previous one.
9. **UP BUTTON**
   Use to direct-select aspect ratios or move the menu cursor up in the OSD. When no menus are present on-screen, the **UP** button toggles through aspect ratios in the following order:
   Native - Virtual Cinema - Cinema - VirtualWide - Letterbox - 4:3 - 16:9
10. **ENTER BUTTON**
    When an item is highlighted on the OSD, the **ENTER** button selects the item.
11. **STANDBY LED**
    Lights amber when the DHD Controller is in standby mode; otherwise it is off.

2.6 DHD Controller Rear Panel

Figure 2-3 shows the rear connector panel on the DHD Controller.

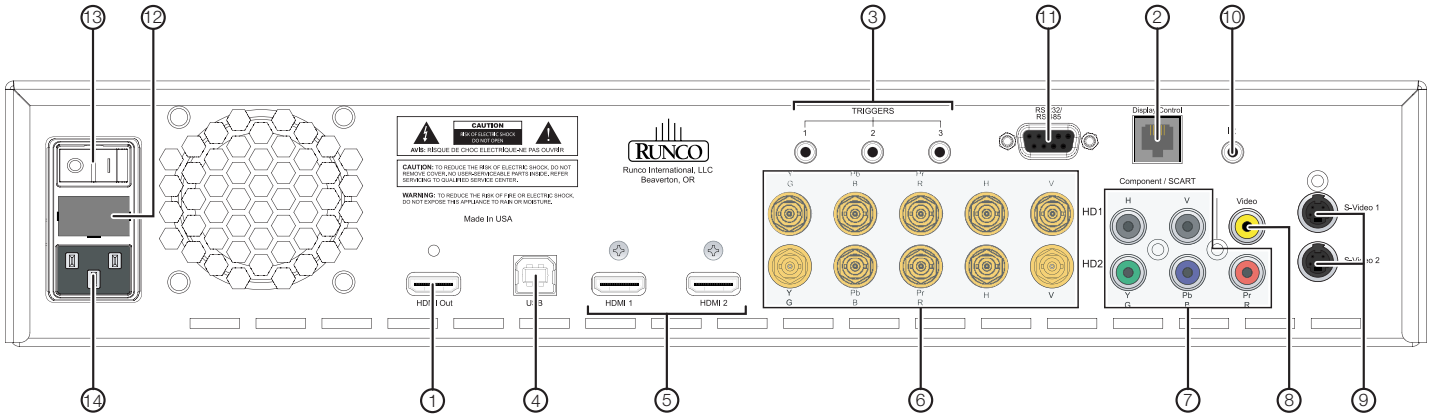

Figure 2-3. DHD Controller Rear Panel

Outputs ➤

1. **HDMI Out**
   Connect this to the **HDMI** connector on the CineWall (see ***Input Connectors and LEDs*** on page 6).
2. **Display Control**
   Connect this to the **RS-232** input on the CineWall, using the provided communication cable.
3. **TRIGGERS**
   Connection for up to three (3), 12-volt trigger-controlled devices. Output current is limited to 250 milliamperes (mA).

Inputs ➤

4. **USB**
   A standard, USB Series “B” connection to a personal computer. (For future use.)
5. **HDMI 1 / HDMI 2 (Digital)**
   HDCP-compliant digital video inputs for connecting an HDMI or DVI source.
6. **HD1 / HD2 (5 x Analog BNCs)**
   Two inputs (five BNCs per input) for connecting standard-definition (SD = 480i/576i), enhanced-definition (ED = 480p/576p) or high-definition (HD = 720p/1080i/1080p) component video sources, or RGBHV sources such as personal computers.
7. **Component / SCART (5 x RCA connectors)**
   SD/HD input for connecting SDTV, EDTV or HDTV component video sources, or RGBHV sources. Also provides RGB input for SCART RGBS sources.
8. **Video**
   Standard, composite video input for connecting a VCR, camcorder or other composite video source. Also provides composite sync input for SCART RGBS sources.

9. **S-Video 1 / S-Video 2**
   Two, standard S-Video inputs for connecting a DVD player, satellite receiver or Super VHS (S-VHS) VCR.
10. **IR**
    Wired input from a Niles- or Xantech-compatible, infrared (IR) repeater system. It is a 3.5-mm, mini phono jack, wired as follows:
    Ring = +5V (current limited to 100mA)
    Tip = IR Input
    Sleeve = Ground
11. **RS-232 / RS-485**
    A female, 9-pin D-sub connector for interfacing with a PC or automation/control system. (Currently, only RS-232 interface is supported.)
12. **MAIN AC FUSE**
    This is the main AC input fuse (5mm x 20mm, 500 mA, 250V slow-blow).
13. **MAIN POWER SWITCH**
    Disconnects or applies power to the DHD Controller.
14. **POWER INPUT (100 to 240 VAC)**
    Connect the DHD Controller to power here.

2.7 CineWall Remote Control Unit

Figure 2-4 shows the CineWall remote control, and the paragraphs that follow describe its functionality.

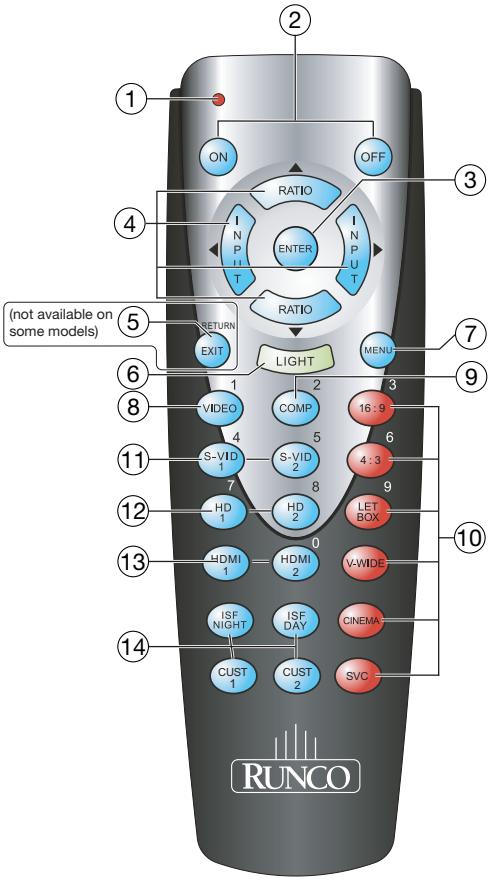

Figure 2-4. DHD Controller/CineWall Remote Control

1. **IR OUTPUT INDICATOR**
   Lights when a button is pressed to indicate that an IR signal is being transmitted.
2. **ON / OFF**
   Press to turn the display on or off.
3. **ENTER**
   Press to select a highlighted menu item or confirm a changed setting.
4. **Cursor Buttons (▲, ◀, ▼, ▶)**
   Use these buttons to select items or settings, adjust settings or switch display patterns.

   When no menu is present on-screen, the **UP** and **DOWN** buttons toggle through the available aspect ratios, in this order:
   UP Button = Native - Virtual Cinema - Cinema - VirtualWide - Letterbox - 4:3 - 16:9
   DOWN Button = 16:9 - 4:3 - Letterbox - VirtualWide - Cinema - Virtual Cinema - Native

   Likewise, the **LEFT** and **RIGHT** buttons toggle through the different source inputs, in this order:
   LEFT Button = HDMI 2 - HDMI 1 - SCART - HD 2 - HD 1 - Component - S-Video 2 - S-Video 1 - Composite Video
   RIGHT Button = Composite Video - S-Video 1 - S-Video 2 - Component - HD 1 - HD 2 - SCART - HDMI 1 - HDMI 2
5. **RETURN / EXIT**
   Press this button to exit the current menu and return to the previous one.

   Note *Not all remote control units have this button. If yours does not, use the **MENU** button (see below) to exit the current menu.*

6. **LIGHT**
   Press to illuminate the buttons.
7. **MENU**
   Press this button to access the OSD controls, or to exit the current menu and return to the previous one.
8. **VIDEO (1)**
   Press to select Composite video input as the source or to enter the numeric character “1.”
9. **COMP (Component) (2)**
   Press to select Component/SCART video input as the source or to enter the numeric character “2.”

10. **Aspect Ratio Selection Buttons**
    Use the red buttons to select an aspect ratio directly or to enter numeric characters, as follows:

    16:9 (3)
    For viewing 16:9 DVDs or HDTV programs in their native aspect ratio.

    4:3 (6)
    Scales the input signal to fit 4:3 display mode in the center of the screen.

    LETBOX (Letterbox) (9)
    For viewing LaserDisc movies or non-anamorphic DVDs on a 16:9 screen.

    V-WIDE (VirtualWide)
    Enlarges a 4:3 image horizontally in a NON-linear fashion to fit 16:9 full screen display.

    CINEMA
    For viewing 2.35:1 source material. The upper and lower portions are masked.

    SVC
    Selects the Virtual Cinema aspect ratio, which enlarges a 16:9 image horizontally in a NON-linear fashion to fit 2.35:1 full-screen display.
11. **S-VID 1 (4) / S-VID 2 (5) (S-Video)**
    Press to select an S-Video input or to enter the numeric character “4” or “5.”
12. **HD 1 (7) / HD 2 (8)**
    Press to select a HD (RGBHV or YPbPr component) input or to enter the numeric character “7” or “8.”
13. **HDMI 1 / HDMI 2 (0)**
    Press to select a Digital Video input. Press **HDMI 2** to enter the numeric character “0.”
14. **Memory Preset Buttons:**

    ISF NIGHT
    Press to recall settings for the current input from the “ISF Night” memory preset.

    ISF DAY
    Press to recall settings for the current input from the “ISF Day” memory preset.

    CUST 1
    Press to recall settings for the current input from the “Custom 1” memory preset.

    CUST 2
    Press to recall settings for the current input from the “Custom 2” memory preset.

Notes:

3. Installation Preparation

3.1 Site Requirements

➤ ***Infrastructure***

Prior to installing the CineWall, confirm that the installation site meets the requirements described in this section.

The CineWall is designed for installation into a dedicated, framed, structurally capable wall with at least 32.50 inches (826 mm) of distance between the user-viewable surface of this wall and anything immediately behind the open framed area. The chassis protrudes approximately 30.75 inches (781 mm) from the front of the dedicated wall into the cavity.

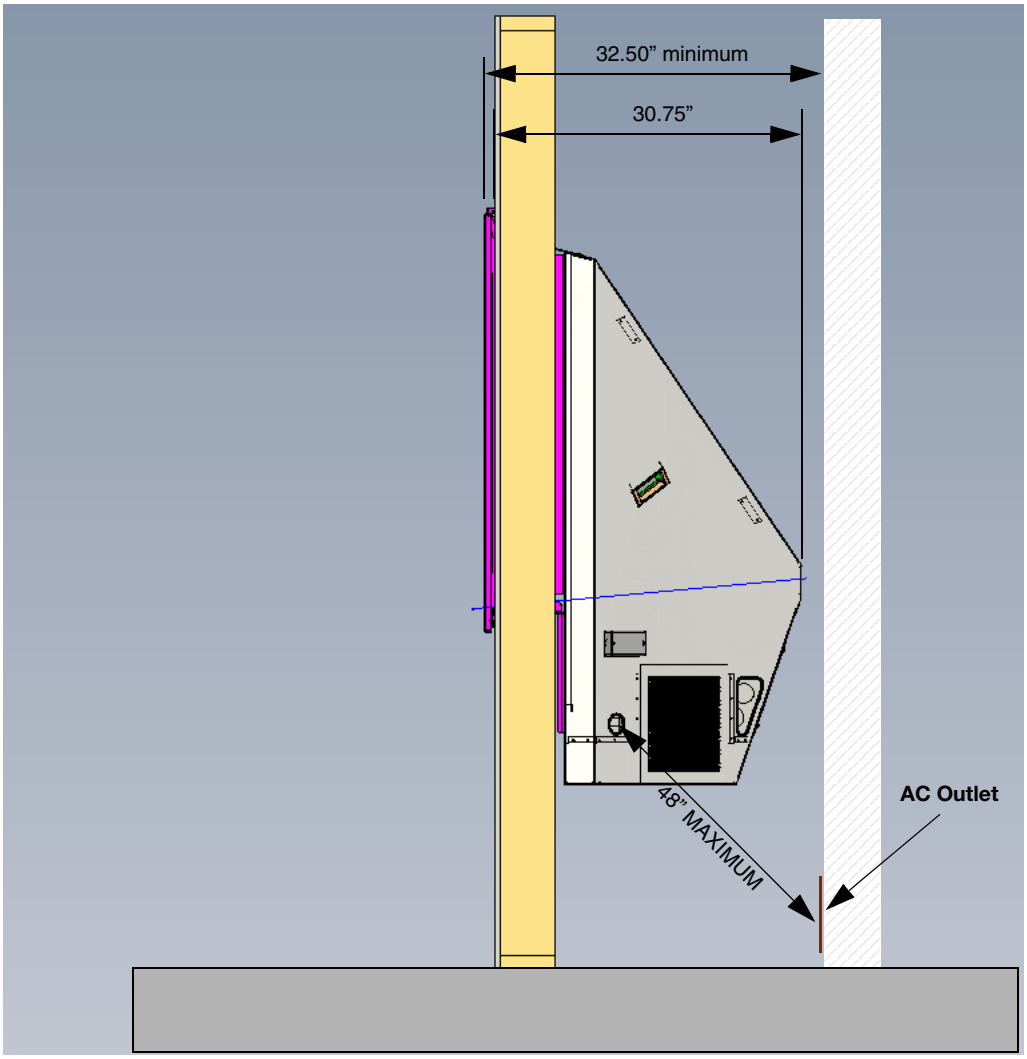

Power Requirements ➤ The CineWall requires clean, noise-free AC power. The power cord provided with the CineWall is 6 feet (1.83 meters) long. In order to use it, the power outlet must be no more than 48 inches (1.22 meters) from the cable openings on the right side of the chassis. If the outlet is farther away, substitute a longer power cord for the one provided with the CineWall; do not use a power strip or extension cord. If you use a substitute power cord, ensure that it is a UL- or CSA-approved, three-conductor (18 AWG or heavier), shielded cord rated at 10 amps minimum.

Site Access ➤ The CineWall is shipped in two containers: one for the screen assembly and one for the chassis and related hardware. The shipping container dimensions are as shown below.

Screen

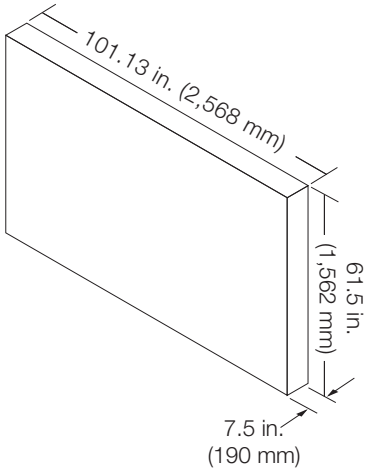

Chassis/Hardware

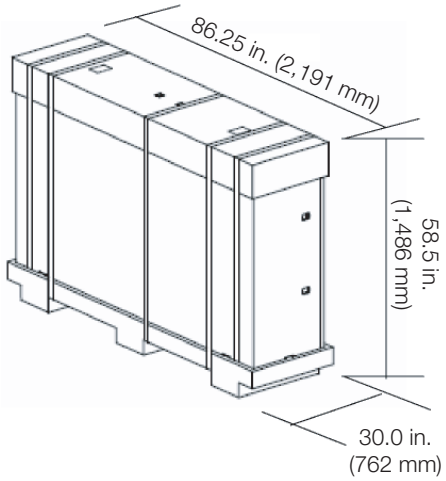

Ensure that the site has a “carry-in” path with sufficient clearances leading to the installation location. This is particularly important in corners in stairways, landings and hallways.

Minimum Stair/Landing Clearances

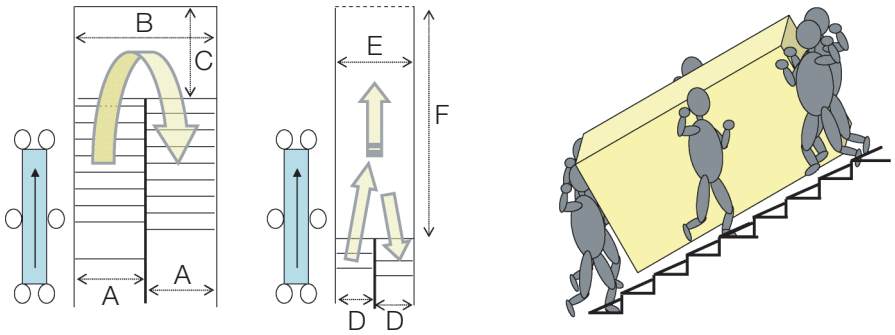

A	2,000 mm	D	1,200 mm
B	4,000 mm	E	2,400 mm
C	1,900 mm	F	3,700 mm

Also confirm that doorways and elevators (if used) provide sufficient clearances:

Minimum Doorway/Elevator Clearances

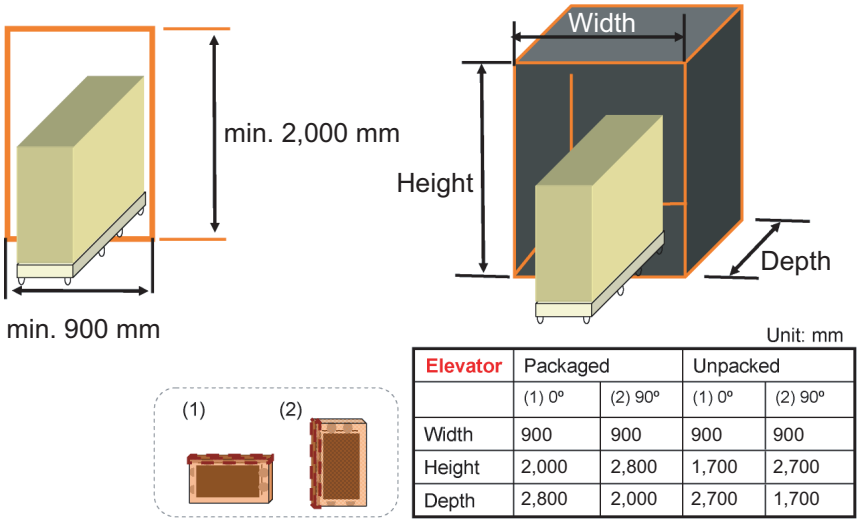

Unit: mm

Elevator	Packaged		Unpacked	
	(1) 0º	(2) 90º	(1) 0º	(2) 90º
Width	900	900	900	900
Height	2,000	2,800	1,700	2,700
Depth	2,800	2,000	2,700	1,700

WARNING ***Do not store or transport the CineWall on its side!*** *It should only be placed on its side if absolutely necessary during loading and unloading.*

Audio/Video Synchronization Issues

Due to its extraordinarily high level of video processing performance, the DHD Controller may distribute video signals with a perceptible level of audio latency. In order to easily solve this issue, Runco recommends using the DHD Controller with a high-quality audio receiver that has the ability to effectively synchronize audio and video signals.

Most mainstream audio receiver/switchers have the ability to synchronize the audio and video to the Advanced Television Systems Committee (ATSC) prescribed tolerances. According to the ATSC, the sound program should never lead the video program by more than 15 milliseconds, and should never lag behind the video program by more than 45 milliseconds.

In addition, many A/V receivers introduce additional latency that needs to be compensated for during the installation. Table 3-1 shows the amount of possible audio latency given different signal input timings.

Table 3-1. Possible Audio Latency for Various Input/Output Timings

Input Timing	Possible Audio Latency (milliseconds)
480i	133
480p	83
576i	160
576p	100
720p/50	100
720p/60	83

Table 3-1. Possible Audio Latency for Various Input/Output Timings

Input Timing	Possible Audio Latency (milliseconds)
1080i/25	160
1080i/30	133
1080p/24	67
1080p/50	80
1080p/60	67

Additional Considerations ➤

Here are some other considerations and tips that can help improve your installation, avoid damage, prevent personal injury and prolong operating life:

- Keep the ambient temperature constant and below 35°C (95°F). Keep the display away from heating and/or air conditioning vents. Changes in temperature may cause drifts in the display circuitry, which may affect performance.
- Keep the CineWall away from devices that radiate electromagnetic energy such as motors and transformers. Common sources of these include slide projectors, speakers, power amplifiers and elevators.
- Handle the unit carefully when installing or carrying it. Use the built-in handles; DO NOT touch or hold the screen face.
- Set the unit away from heat, excessive dust, and direct sunlight.
- Protect the inside of the unit from liquids and small metal objects.
- Do not hit or scratch the screen surface as this causes flaws on the surface of the screen.
- ***DO NOT spray liquid of any kind on the screen.*** It can drip down the screen and wick up between the layers. When liquid gets between the screen layers, it is impossible to remove and the screen is ruined!

3.2 Unpacking and Inspecting

When you receive your CineWall shipment, check the shipping containers for damage. If there are signs of damage or rough handling, it is recommended that you have an agent of the carrier present when the equipment is unpacked. If the shipping containers do not appear to be damaged, move them to the installation site before opening them.

As you unpack each container, check all parts against the shipping documents. The CineWall is protected in the shipping containers. Unpack them carefully, inspecting the chassis and screen for scratches, dents or other signs of damage. If the equipment is damaged, save all packing materials and notify both Runco and the carrier immediately.

Proceed as follows to unpack your CineWall:

1. Remove the top of the shipping container for the chassis and associated hardware.

2. Lift the box containing the hardware up off of the foam inserts and set it aside.

3. Remove the foam inserts on the top corners of the chassis and set them aside.

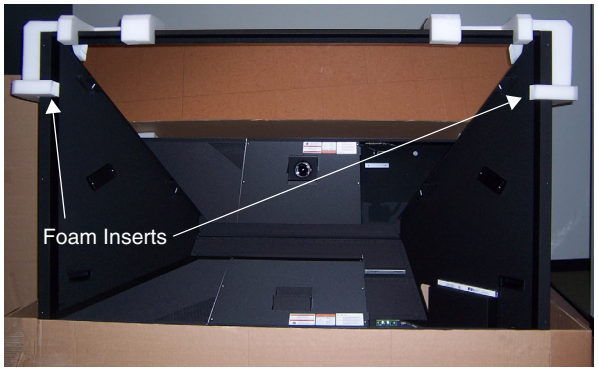

4. With the help of your assistant, grasp the chassis by the handles on either side and lift it straight up and out of the shipping container.

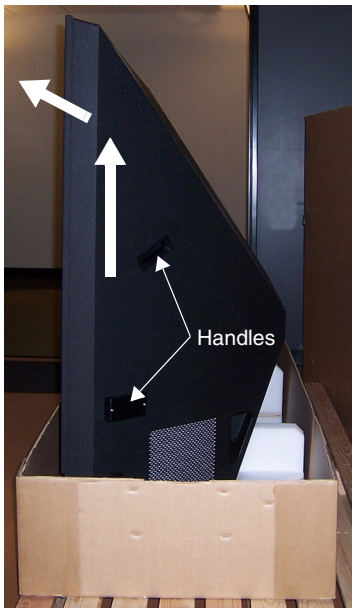

5. Carefully unpack the screen by opening one end of the shipping container and sliding the screen out of the box.
6. Unpack the chassis hardware and verify that you have received all of the parts listed and shown below.

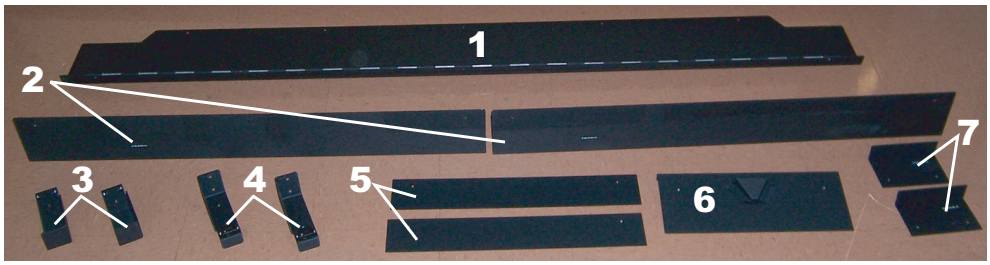

Item Number	Description	Quantity
1	Top Flange	1
2	Light Blocks (Left/Right Sides)	2
3	Bottom Brackets (Left Center, Right Center)	2
4	Bottom Brackets (Left, Right)	2
5	Light Blocks (Bottom Left Center/Bottom Right Center)	2
6	Center Light Block/Strut Catch	1
7	Light Blocks (Bottom Left/Bottom Right)	2
(not shown)	Mounting Screws	(various)

3.3 Site Preparation

Because every home theater installation is unique, it is impossible to provide detailed, step-by-step instructions that are applicable to every situation. Instead, this section provides general guidelines for site construction and product installation. Review this information carefully and adapt it as needed to your installation requirements.

The instructions in this section describe how to prepare a dedicated home theater for a CineWall installation. Throughout these instructions, the following “typical” conditions are assumed:

- **Wall thickness:** 3 inches (76.2 mm) minimum, 7 inches (177.8 mm) maximum
- **Stud spacing:** 24 inches (609.6 mm)
- **Wall finishing material:** Sheetrock or other suitable material
- **Screen position:** Centered horizontally between two studs 96 inches (2438.4 mm) apart

Shown below is a typical wall. It is 12 feet wide, with the studs spaced 24 inches apart. The shaded area represents the opening you will need to create for the CineWall.

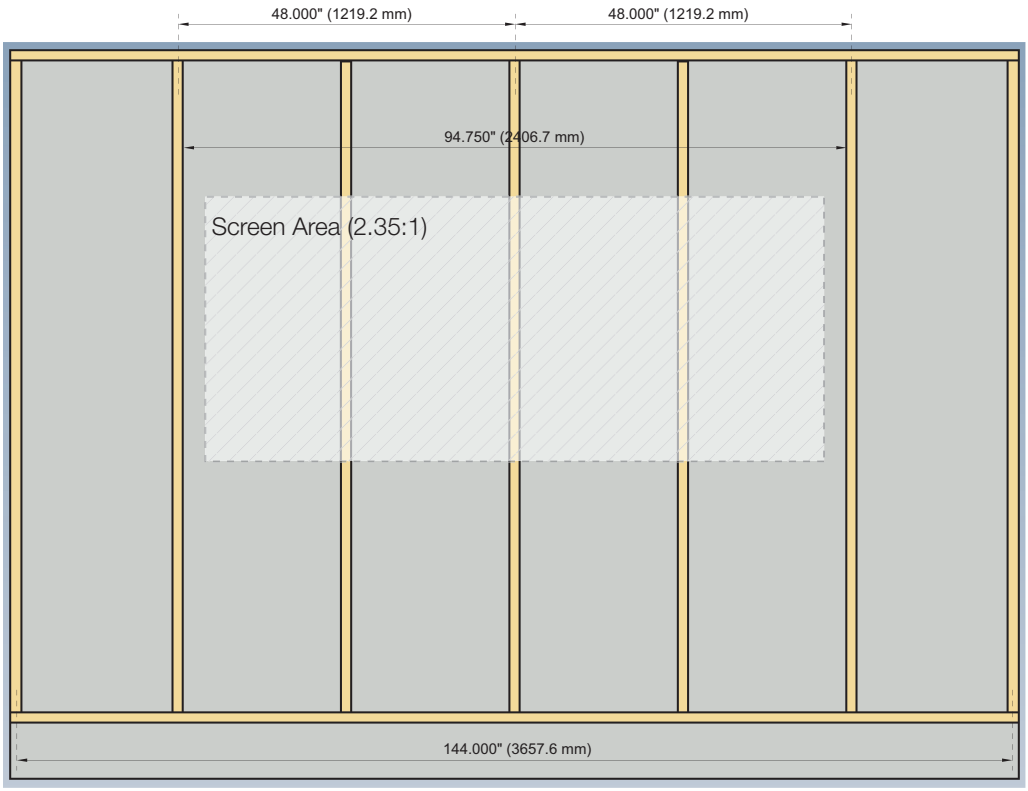

Caution ***Consult a qualified structural engineer or architect before making any modifications to a load-bearing wall.***

Create wall opening:

1. Locate the screen center based on the desired screen height.
2. From this point, measure/mark 44.375 inches to the left and to the right and 19.25 inches above and below.
3. Using a laser level, determine and mark the locations of the opening corners.
4. **Double-check your measurements.** “Measure twice, cut once” is always a great rule of thumb to follow.
5. Using the marks as a guide, cut a rectangular opening 88.75 inches wide and 38.5 inches tall.

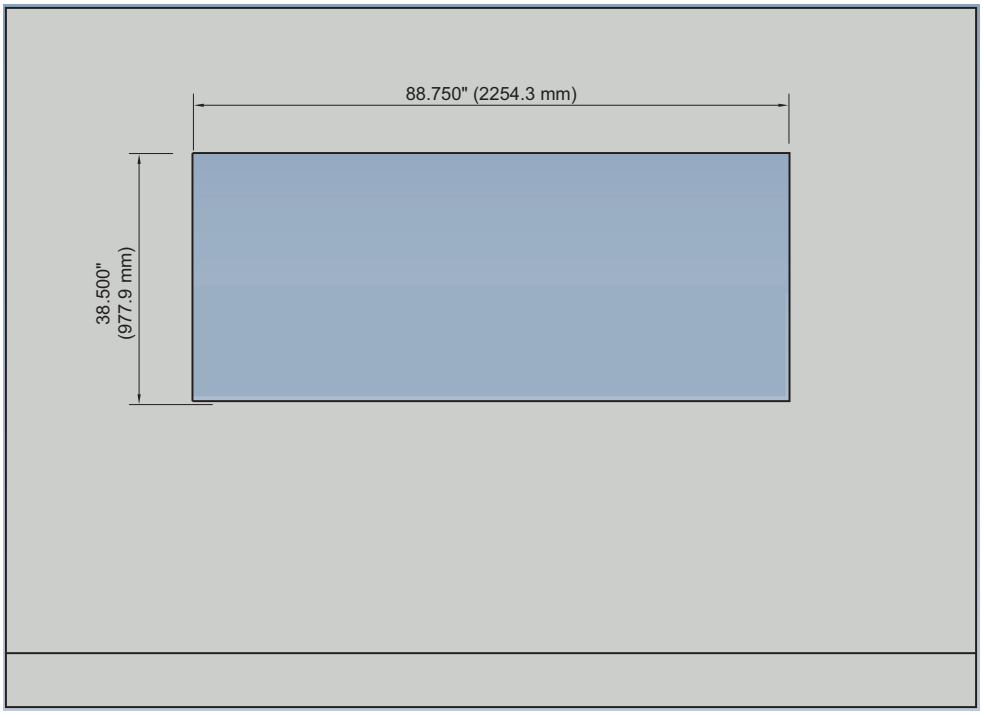

6. Frame the wall opening in a manner similar to this example.

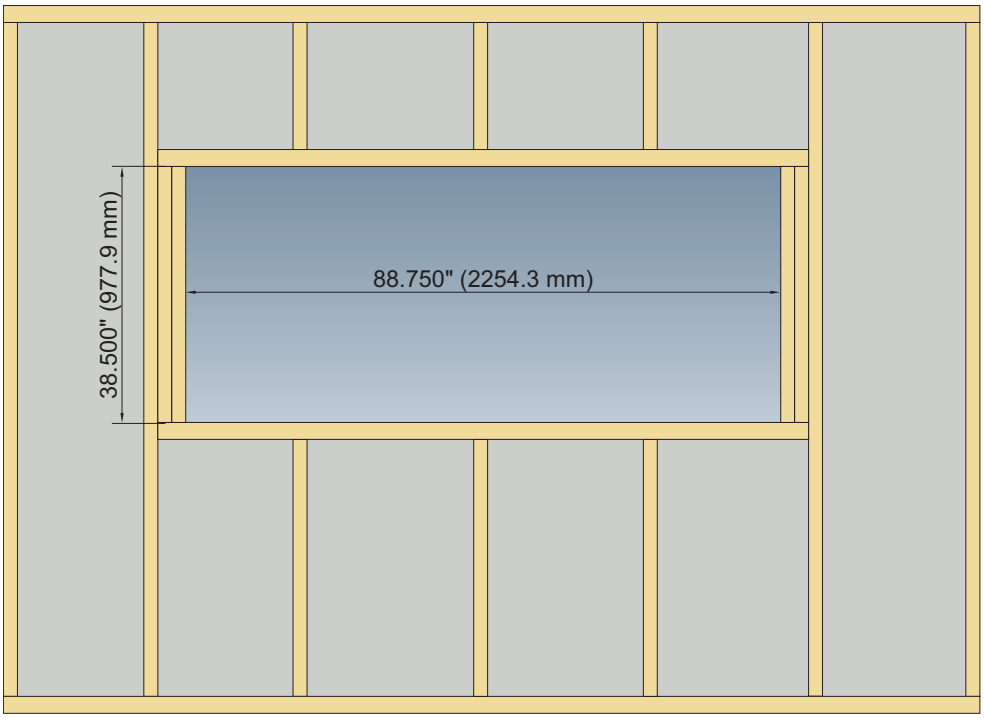

Notes:

4. Installation

4.1 Overview

Table 4-1 gives a quick overview of the CineWall installation process. The sections following this one provide detailed instructions.

Table 4-1. Installation Overview

Step	Procedure	For Details, Refer to page...
1	Install Top Flange and Bottom Brackets on Chassis Assembly	26
2	Place Chassis Assembly with brackets installed into opening in dedicated wall	27
3	Secure Chassis Assembly to wall	27
4	**Install Screen Assembly:** • Fix screen in open position using fold-out strut • Secure top of screen frame to hinge with safety catches	30
5	**Power up the CineWall:** • Connect AC power to the CineWall • Set main power switch on CineWall to ON • Close screen • Press **ON** on CineWall Setup remote control to turn on display	33
6	Align image corners with screen corners	34
7	**Power down the CineWall:** • Press **OFF** on CineWall Setup remote control to turn off display • Open screen	34
8	Connect the DHD Controller to the CineWall	36
9	Connect signal sources to the DHD Controller	38
10	Connect PC or control system to DHD Controller via RS-232	43
11	**Power up the CineWall and DHD Controller:** • Connect AC power to the DHD Controller • Turn on source components • Close screen • Set DHD Controller main power switch to ON • Use remote control or **ON/STANDBY** (⏻) button on DHD Controller front panel to turn on system	47
12	Display calibration: adjust the following for each input and display mode (resolution and frame rate); save settings when finished: • Aspect ratio • Brightness • Contrast • Color level • Tint • Sharpness • White Balance	51

4.2 Mounting the CineWall Chassis

This section provides detailed instructions for installing the CineWall chassis.

Install Top Flange and Bottom Brackets on Chassis Assembly ➤ Install the Top Flange as shown in Figure 4-1. Then, install the Left and Right Bottom Brackets (the ones with the latches on them) at the bottom corners of the chassis, and install the Left Center and Right Center Bottom Brackets in the two intermediate locations.

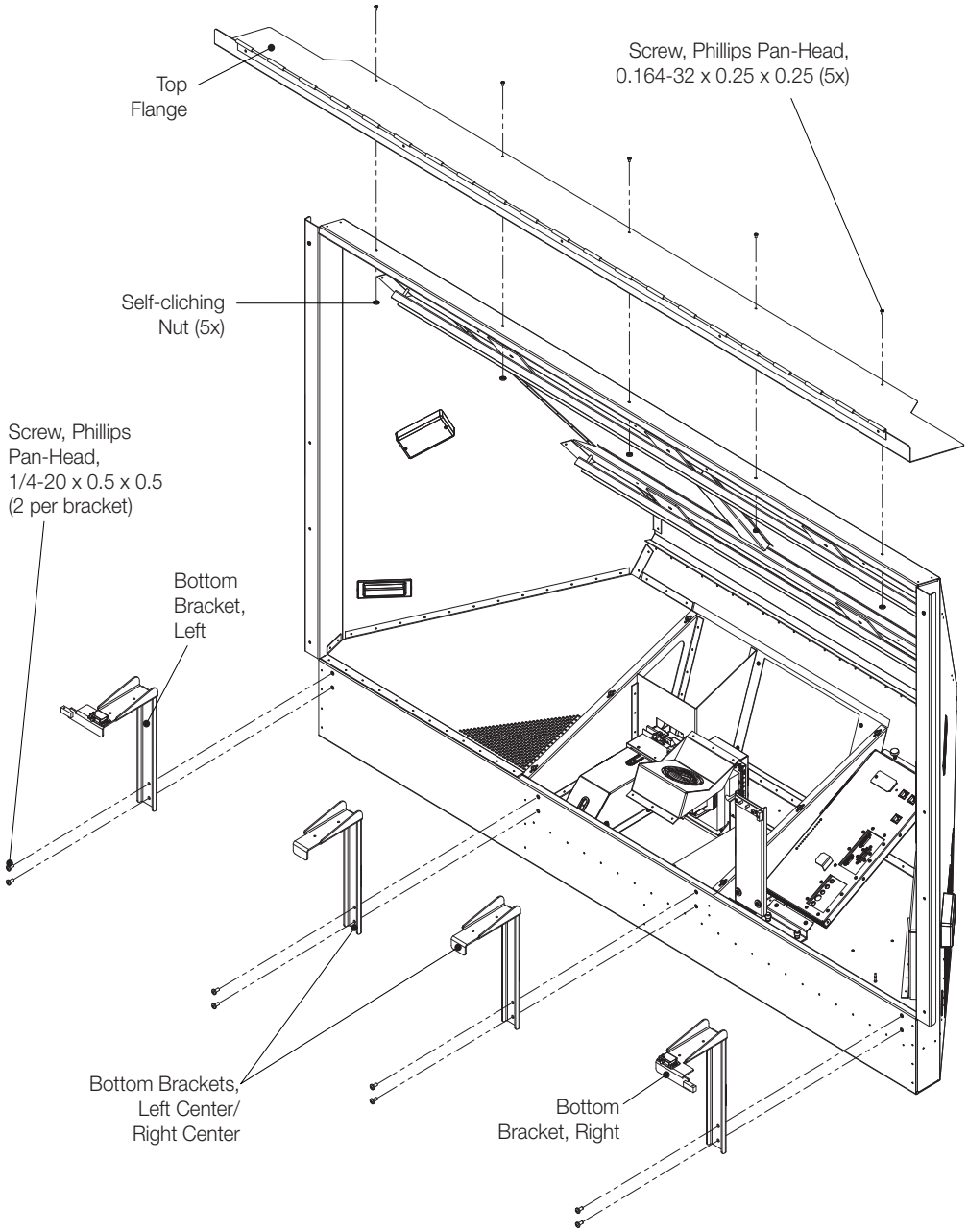

Figure 4-1. Installing the Top Flange and Bottom Brackets

With the help of your assistant(s), lift the Chassis Assembly by the handles.

While tilting the Chassis Assembly downward, carefully move the Chassis Assembly into the wall opening. Allow the bottom brackets to come to rest on the bottom of the wall opening. Then, rotate the chassis into the opening until the top flange makes contact with the top of the opening.

Install Chassis Assembly into Wall

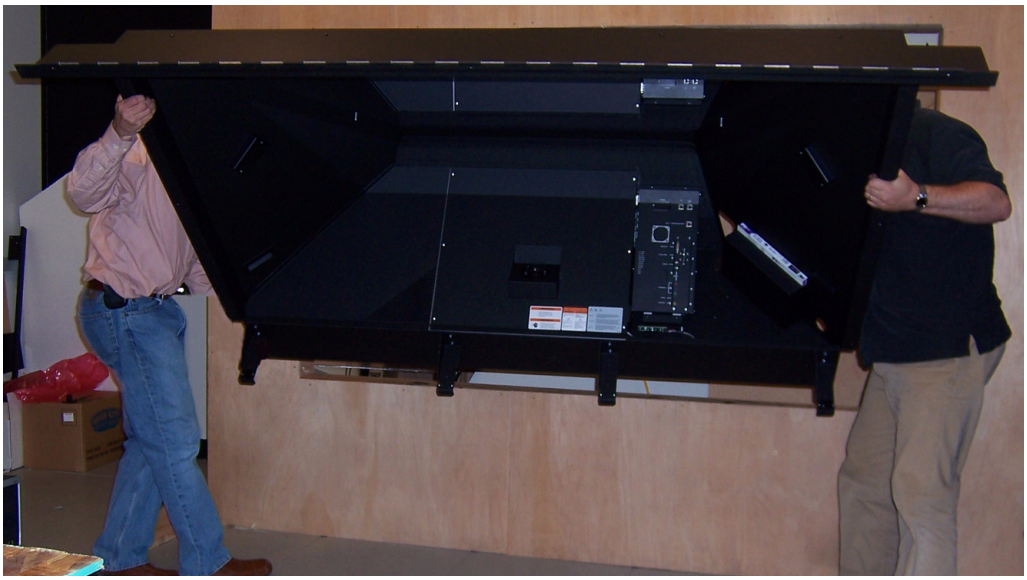

Once the chassis is correctly positioned in the wall opening, you are ready to secure it.

Secure Chassis to Wall

Caution

Before you secure the CineWall chassis to the wall, ***it is absolutely critical that the Top Flange be perfectly level and properly positioned relative to the Bottom Brackets****. If it is not, the screen – when installed – won't open and close properly.*

The CineWall includes a special spacing tool to make it easier to level the Top Flange and ensure that it is the correct distance from the Bottom Brackets.

1. Place the Spacing Tool on either the Left Center or Right Center Bottom Bracket, as shown.
2. Engage the slot at the top of the spacing tool with the hinge barrel on the Top Flange.

Ensure that the spacing tool is perpendicular to the top and bottom of the wall opening.

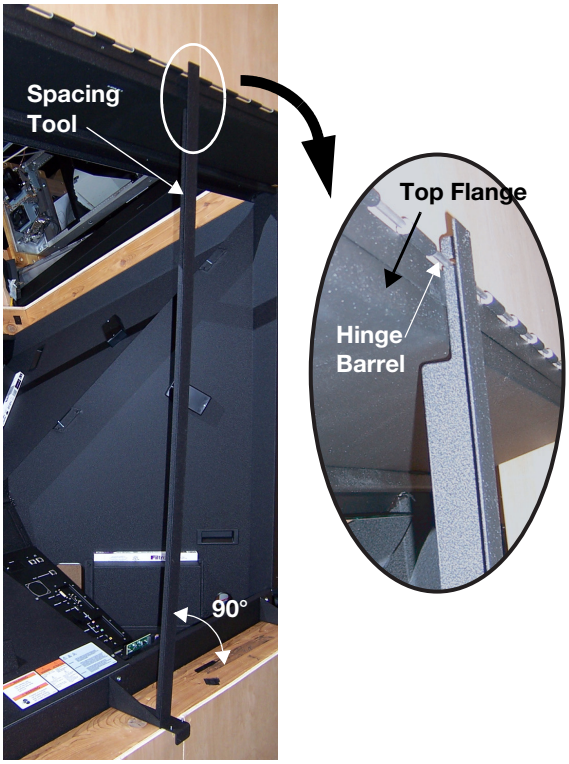

3. Using wood screws of the appropriate size – two for each bottom bracket (8 total) – secure the bottom of the CineWall Chassis Assembly to the opening frame.

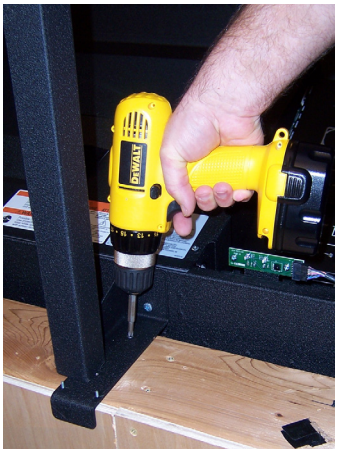

4. Secure the Top Flange to the opening frame, using five wood screws. (Use the Spacing Tool at each attachment point, as described above.)

5. Secure the Left and Right Side Light Blocks to the chassis and the opening frame.

6. Secure the Bottom Center Light Block/Strut Catch to the opening frame, between the two Center Bottom Brackets.
7. Install the other Bottom Light Blocks (left, left center, right center, right) as shown below.

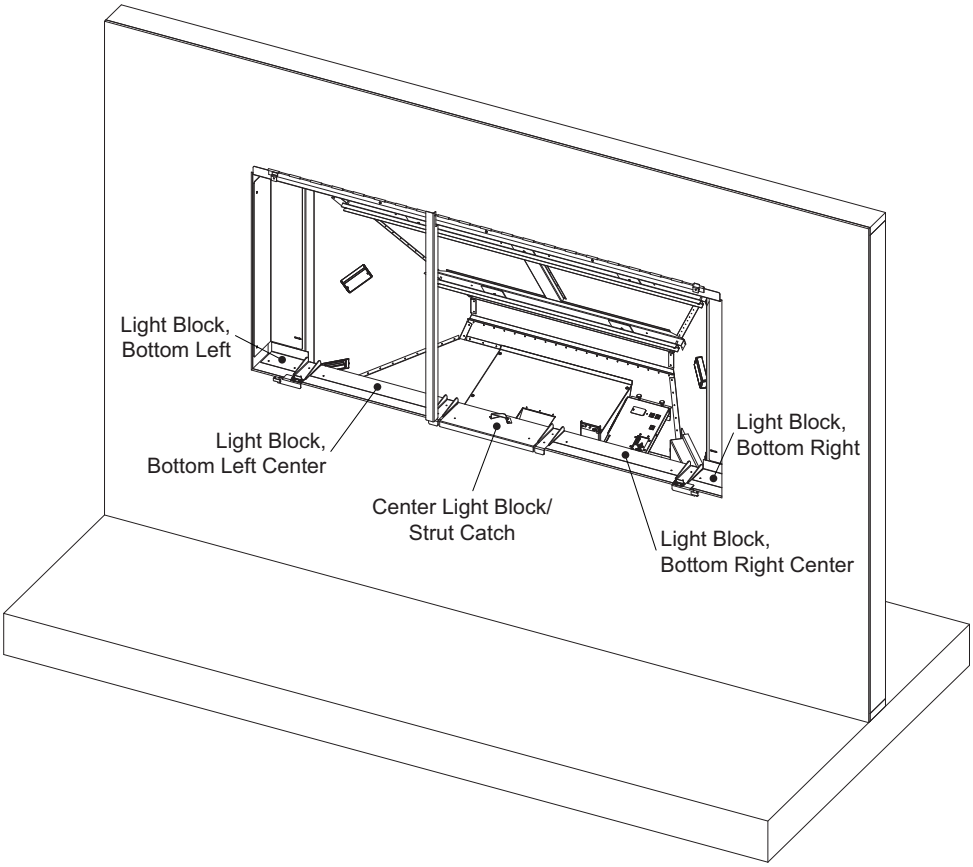

4.3 Installing the Screen

Figure 4-2 shows the CineWall screen assembly. The screen attaches to the hinge on the top flange of the Chassis Assembly via six hooks along the top of the frame.

Two latches at the bottom of the frame secure the screen in the closed position. A strut at the bottom of the frame opens out and holds the screen in the open position during installation or maintenance.

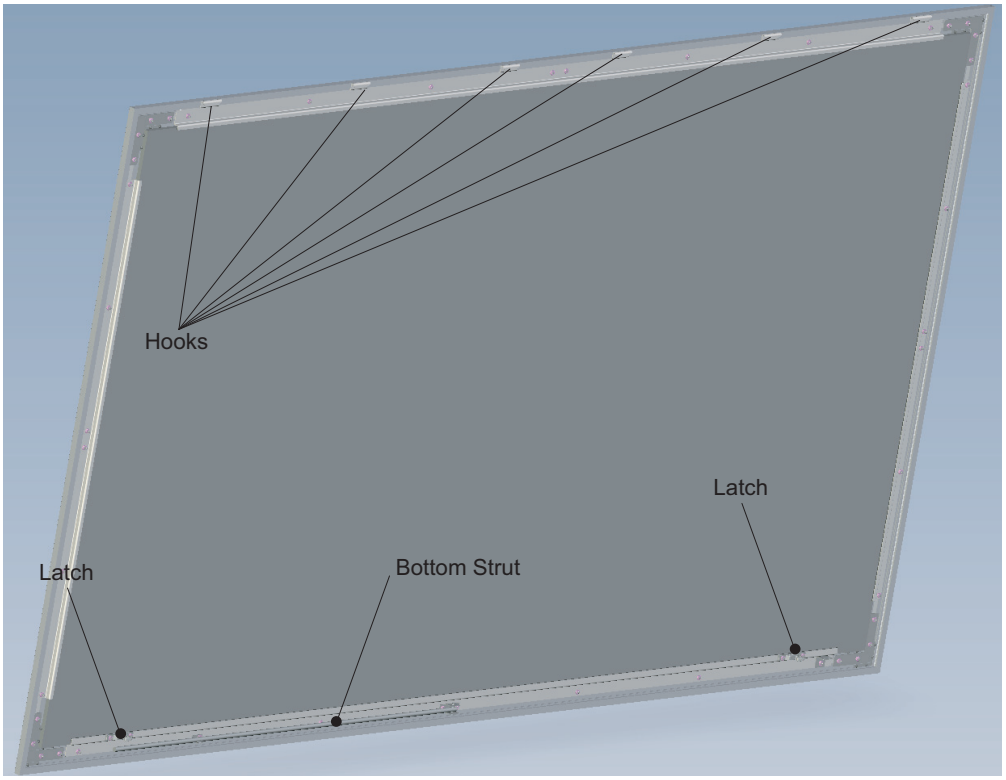

Figure 4-2. CineWall Screen Assembly – Rear View

To install the screen:

1. Remove the Spacing Tool (used to install the chassis; see page 28).
2. With the help of your assistant(s), lift the screen and position it in front of the Chassis Assembly.

3. Use the hooks to hang the frame on the hinge at the top of the chassis.

4. Use the strut at the bottom of the frame to prop the screen in the open position.

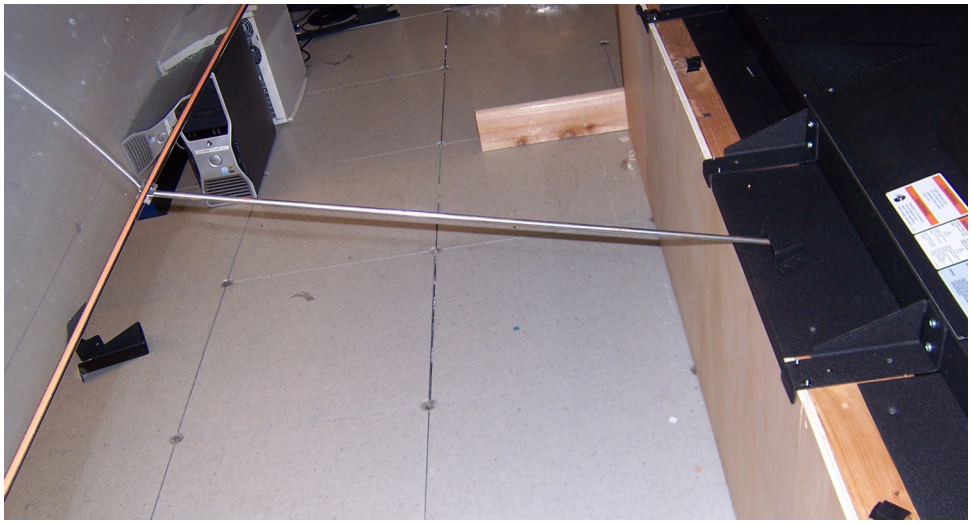

5. Install the safety catches at the top rear corners of the screen. These prevent the screen from separating from the hinge when the screen is opened or closed.
   a Remove the nut at one end of the hinge wing on the back of the screen.
   b Place the safety catch on the exposed screw shaft where you removed the nut.
   c Secure the catch using the nut that you removed in Step 5a.
   d Repeat Steps 5a through 5c to install the other safety catch.

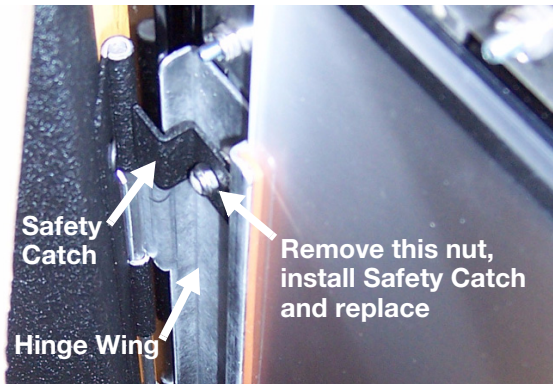

4.4 Powering Up the CineWall

➤ ***Connecting the CineWall to AC Power***

Plug the female end of the power cord into the AC receptacle on the right side of the CineWall display engine, next to the power switch. Then, connect the other end to your AC power source (AC 100V ~ 240V).

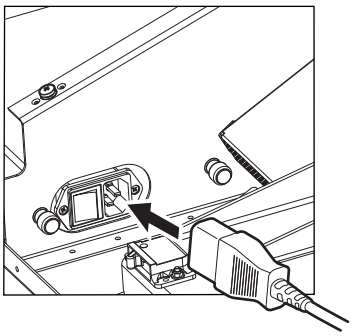

1. Set the main power switch (next to the AC receptacle) on the CineWall to the **ON** position.
2. Return the strut to the closed position and close the screen.
3. Gently press on the bottom left and right corners to engage the latches at the bottom of the screen.
4. Install two, AAA-size batteries (supplied) in the CineWall Setup remote control unit.
5. Press the **ON** button on the CineWall Setup remote control unit to turn on the display.

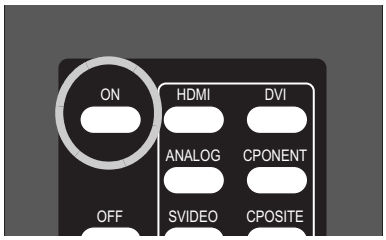

4.5 Aligning the Image

The CineWall optical engine was perfectly adjusted when it left the factory. However, vibration in transit may have moved it. Before connecting the DHD Controller to the display or performing any other installation tasks, proceed as follows to confirm proper image alignment. You need only perform this procedure once.

Caution

You must use the CineWall Setup remote control unit – not the DHD Controller remote control – to perform this procedure. ***Use the CineWall Setup remote control unit ONLY as described in this section.*** *It will not function when the display is connected to the DHD Controller.*

To align the optical engine:

1. Press **MENU** on the CineWall Setup remote control unit.

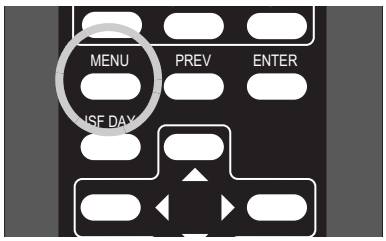

2. Use the ▲ or ▼ button to select Program Information from the Main Menu. Then, press **ENTER** or ▶.
3. Press **ENTER**, ▶, ▶. ◀, ◀, **ENTER**, in sequence. Then, press **MENU** twice.
4. Select Advanced Options from the Main Menu.
5. Select Image Alignment from the Advanced Options menu.
6. Highlight Test Pattern in the Image Alignment menu and choose **Grid**. This pattern shows all the pixels in the optical engine.

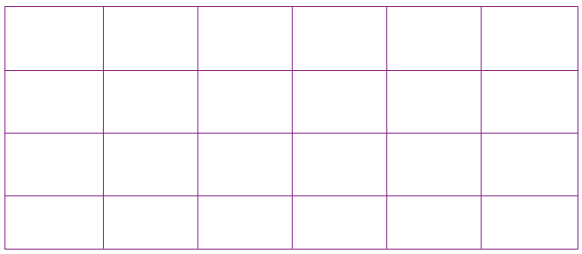

7. Highlight Adjust Corners in the Image Alignment menu and press **ENTER** or ▶.
8. Use the ▶**,** ◀**,** ▲ and ▼ buttons to precisely position the upper-left corner of the displayed grid pattern in the upper-left corner of the screen.
9. Press **ENTER** and repeat Step 8 for the other three corners.
10. Press **PREV** to save the corner position settings and exit the Adjust Corners menu.
11. Press **PREV** again to turn off the test pattern and exit the Image Alignment menu.
12. Press **MENU** to exit the menu system.

When you have completed the Image Alignment procedure, press **OFF** on the CineWall Setup remote control unit to turn off the display. Then, open the screen and proceed with the next section.

4.6 Connections to the CineWall

Proceed as follows to connect the CineWall to your video sources, external controller(s) – if present – and AC power.

When connecting your equipment:

- Turn off all equipment before making any connections.
- Use the correct signal cables for each source.
- Ensure that the cables are securely connected. Tighten the thumbscrews on connectors that have them.

Route all cables through the cable openings on the right side of the CineWall chassis.

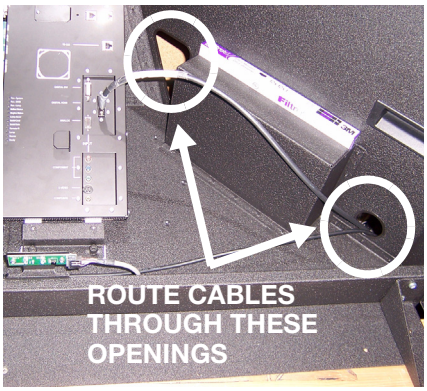

Connecting the CineWall to the DHD Controller ➤ Connect the DHD Controller to the CineWall as shown in Figure 4-3 and described in the sections that follow.

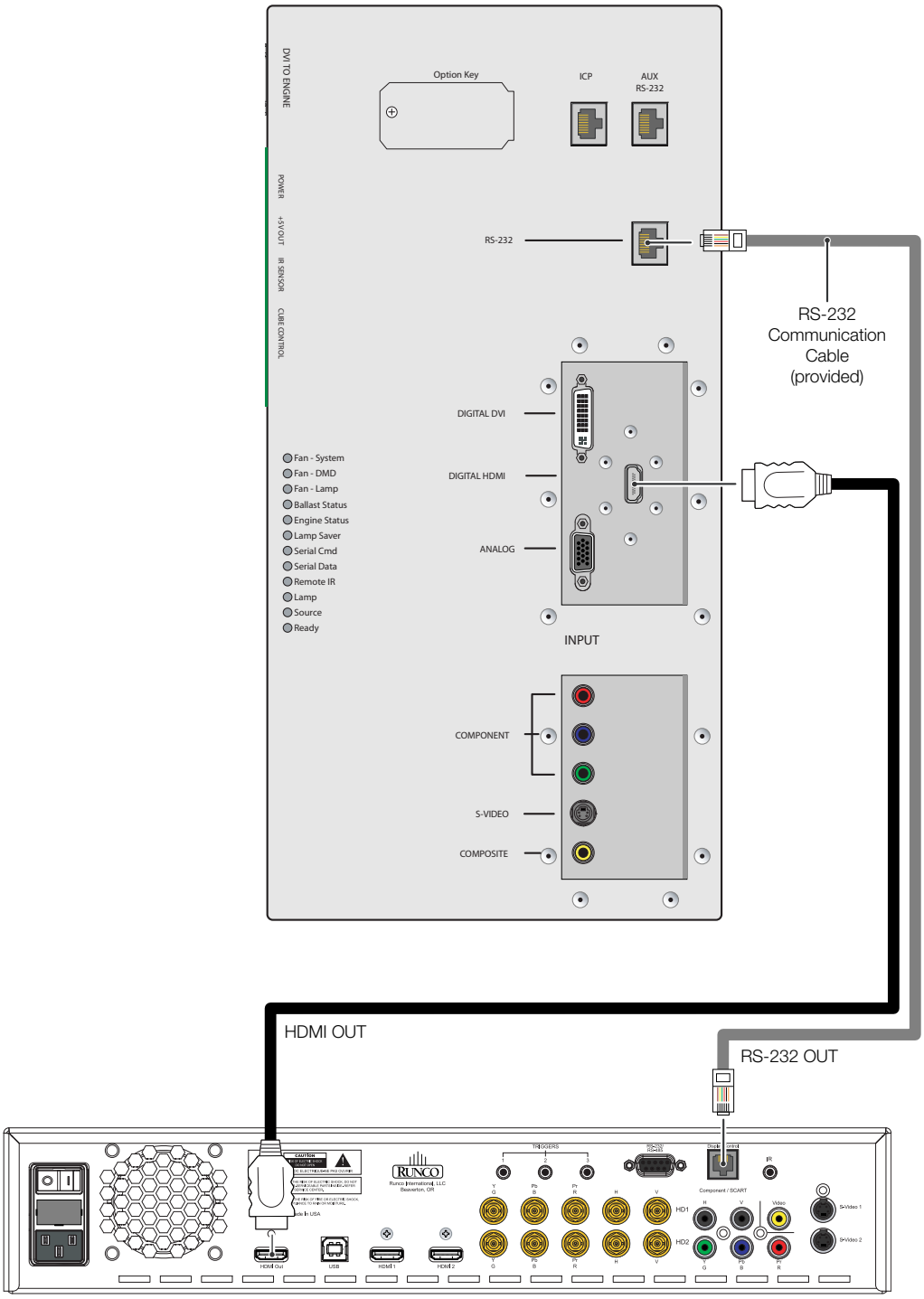

Figure 4-3. Connecting the CineWall to the DHD Controller

Digital Video Connection: Connect the HDMI output from the DHD Controller to the **HDMI** input on the CineWall, using an HDMI-to-HDMI cable.

RS-232 Connection: Connect the **Display Control** output from the DHD Controller to the **RS-232** input on the CineWall. Use a cable with an RJ11 plug at the DHD Controller end and an RJ-45 plug at the CineWall end. (The CineWall accessory kit includes such a cable.)

If you make your own cable, it **must** be wired as shown in Figure 4-4.

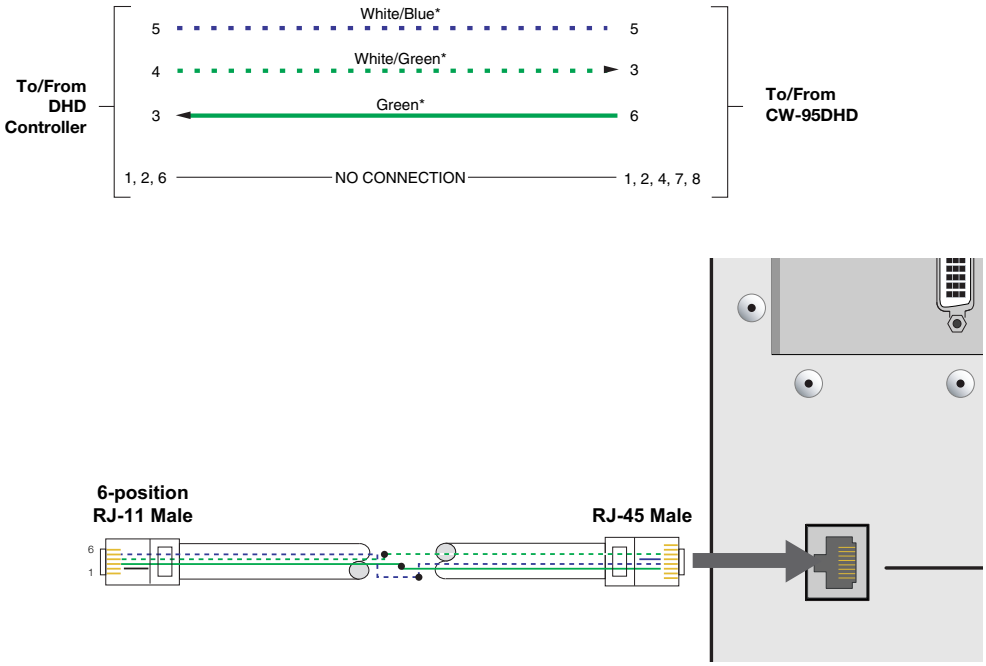

* - CAT5 wire colors, as defined in EIA/TIA-568B

Figure 4-4. RS-232 Connection from the DHD Controller to the CineWall

Connecting Source Components to the DHD Controller

Connect your video sources to the DHD Controller as shown and described in the sections that follow.

HDMI Source Connections: See Figure 4-5.

Tip

Use the HDMI inputs whenever possible. This ensures the highest video quality because the signal is carried in the digital domain throughout the entire signal path, from source component output into the display.

Note

You can also connect computers with DVI output to these inputs. Refer to ***Supported Timings*** *on page 90 for a list of compatible input signals.*

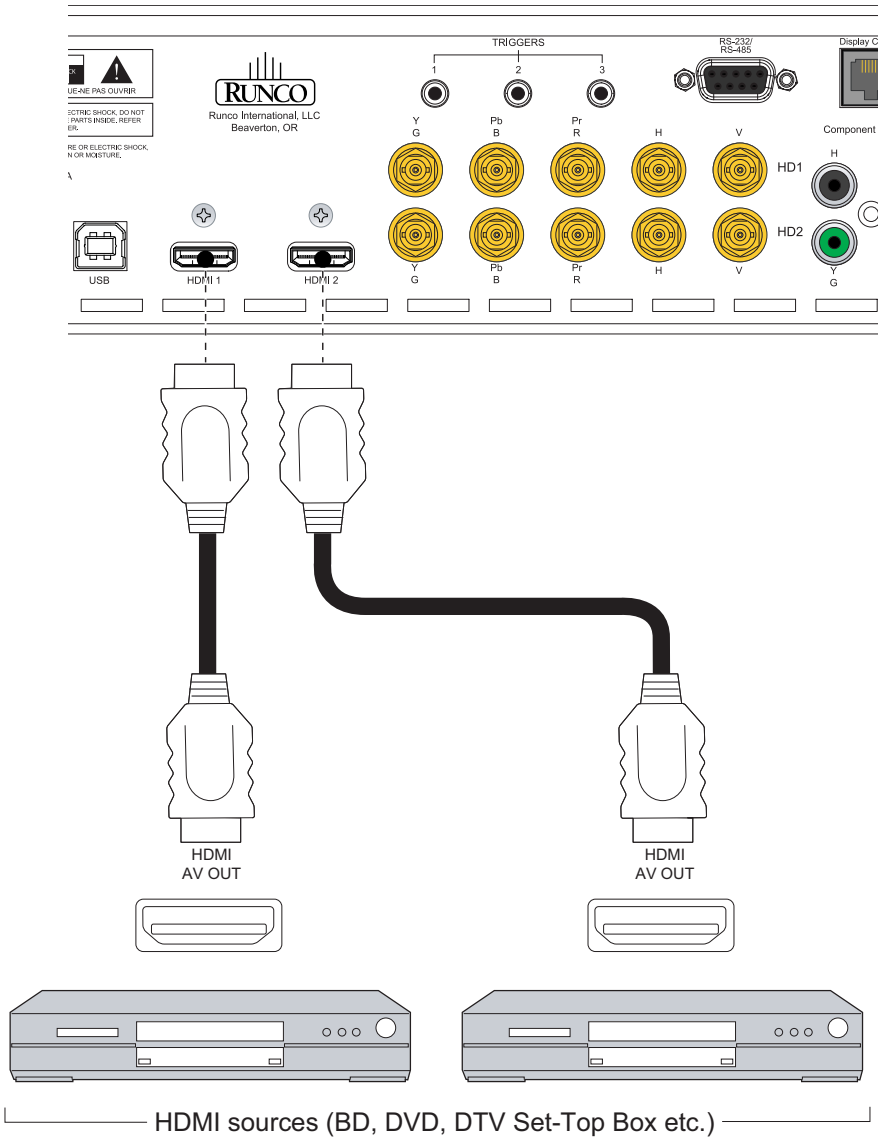

Figure 4-5. HDMI Source Connections

Component Video Source Connections: Connect your component video sources to the HD1, HD2 and/or Component/SCART inputs as shown in Figure 4-6.

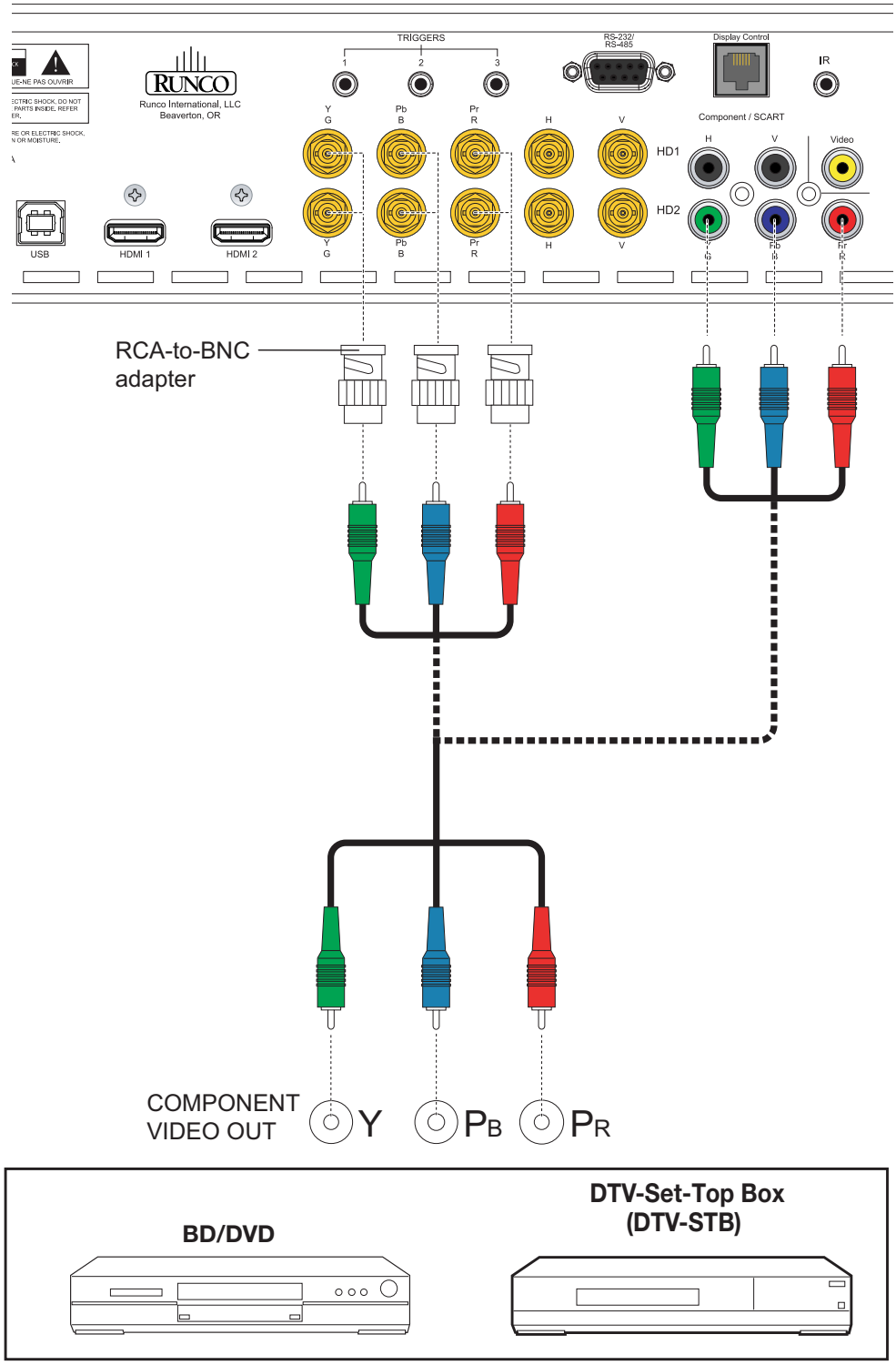

Figure 4-6. Component Video Source Connections

RGBHV Source Connections: Connect personal computers and/or other RGB sources to the HD1, HD2 and/or Component/SCART inputs as shown in Figure 4-7.

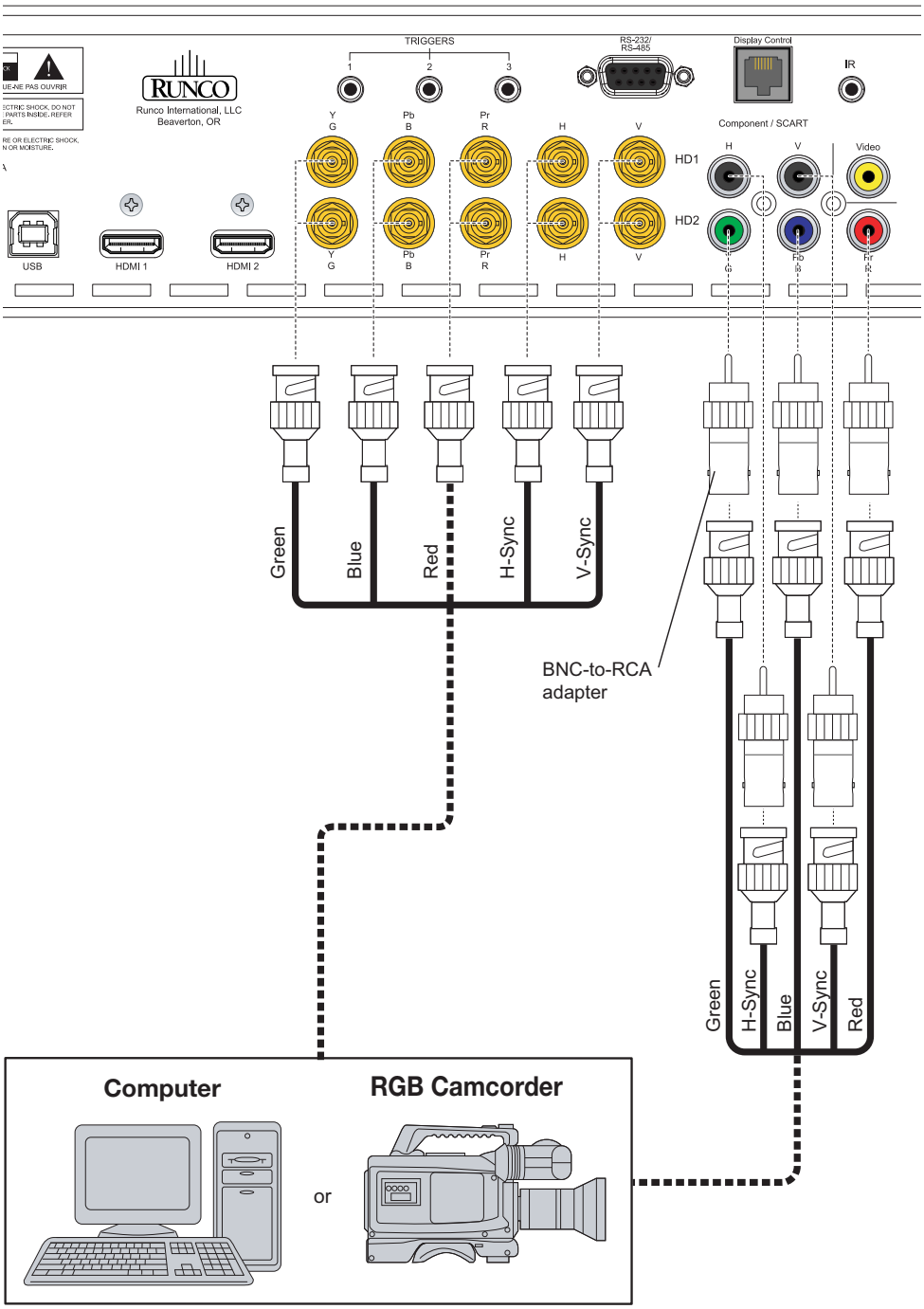

Figure 4-7. RGBHV Source Connections

SCART RGBS Source Connections: Connect the green, blue and red outputs from your SCART source to the Component/SCART input on the DHD Controller. Connect the sync output from your SCART source to the Video input on the DHD Controller. See Figure 4-8.

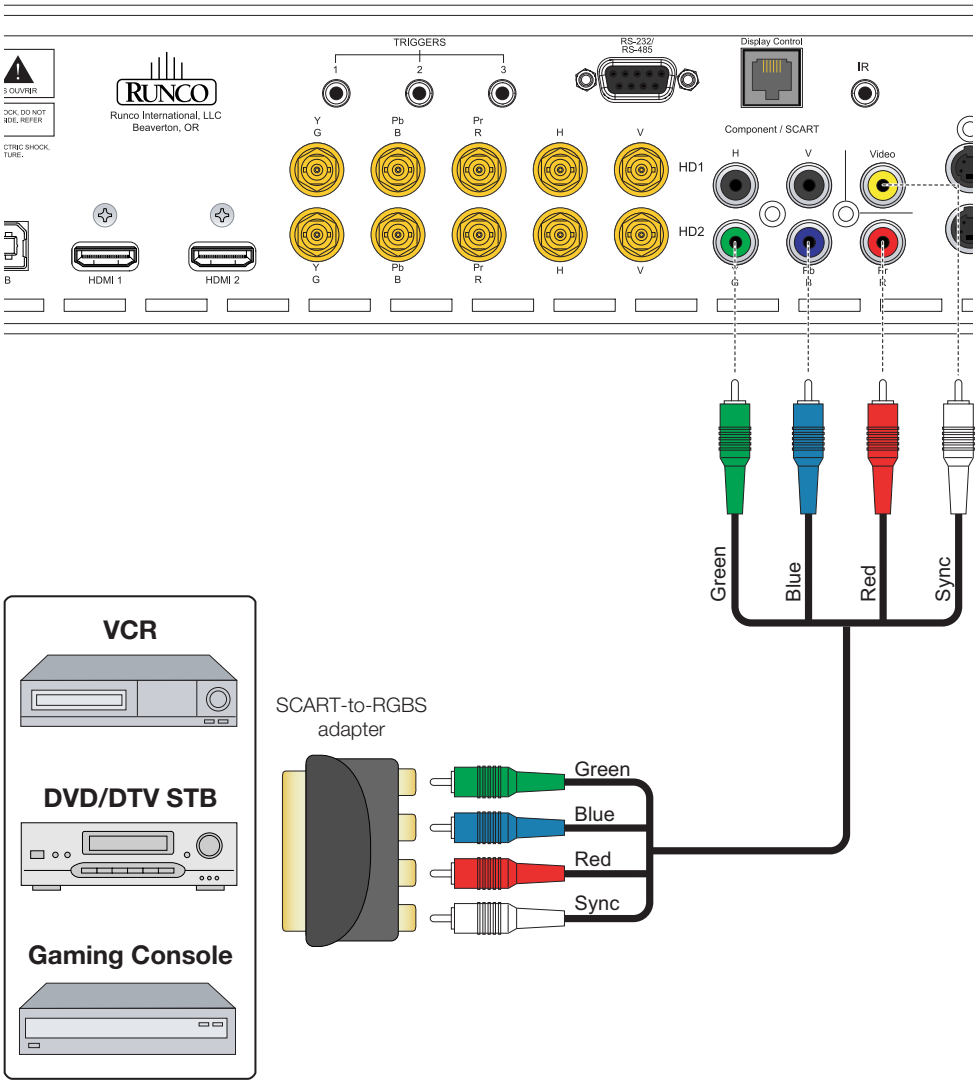

Figure 4-8. SCART RGBS Source Connections

Composite and S-Video Source Connections: See Figure 4-9.

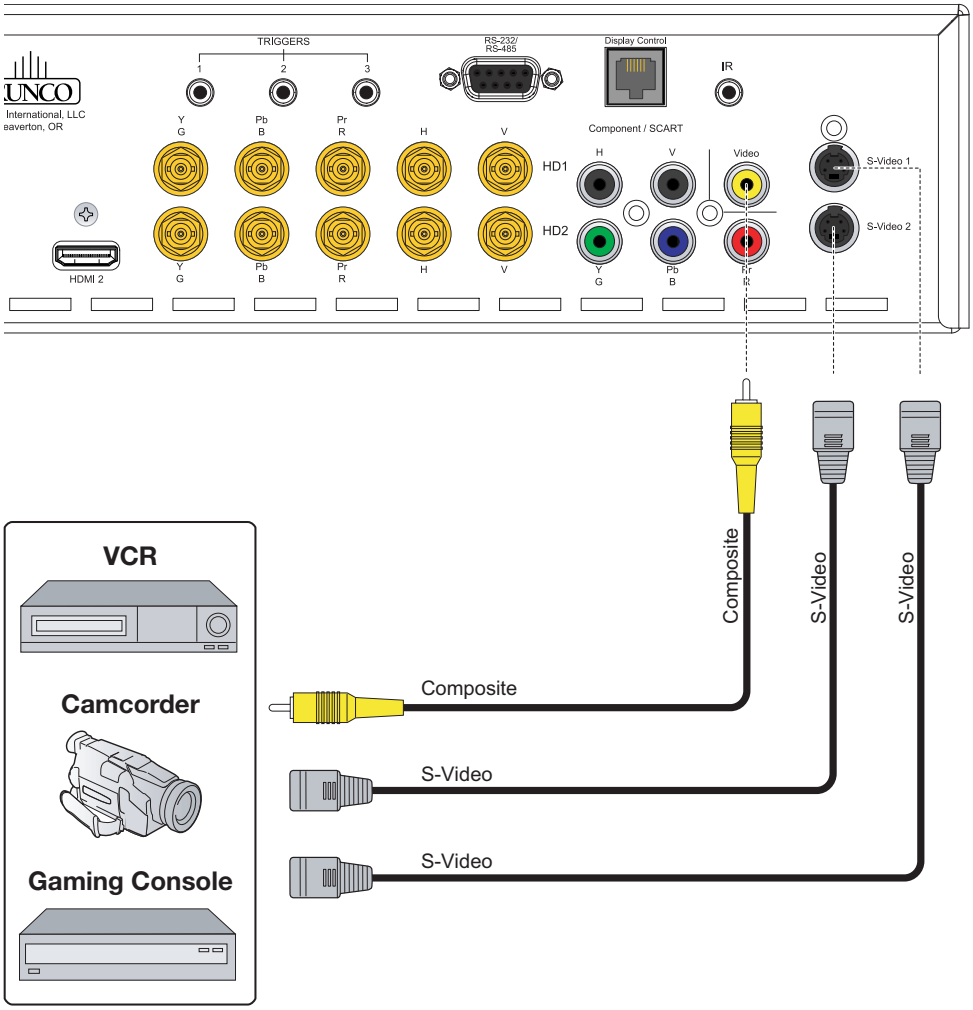

Figure 4-9. S-Video and Composite Video Source Connections

➤ *RS-232 Controller Connection*

Use a straight-through, 9-pin RS-232 cable to connect a PC or control/automation system (if present) to the RS-232 port on the DHD Controller; see Figure 4-10.

For more information about using this connection, refer to ***Serial Communications*** on page 81.

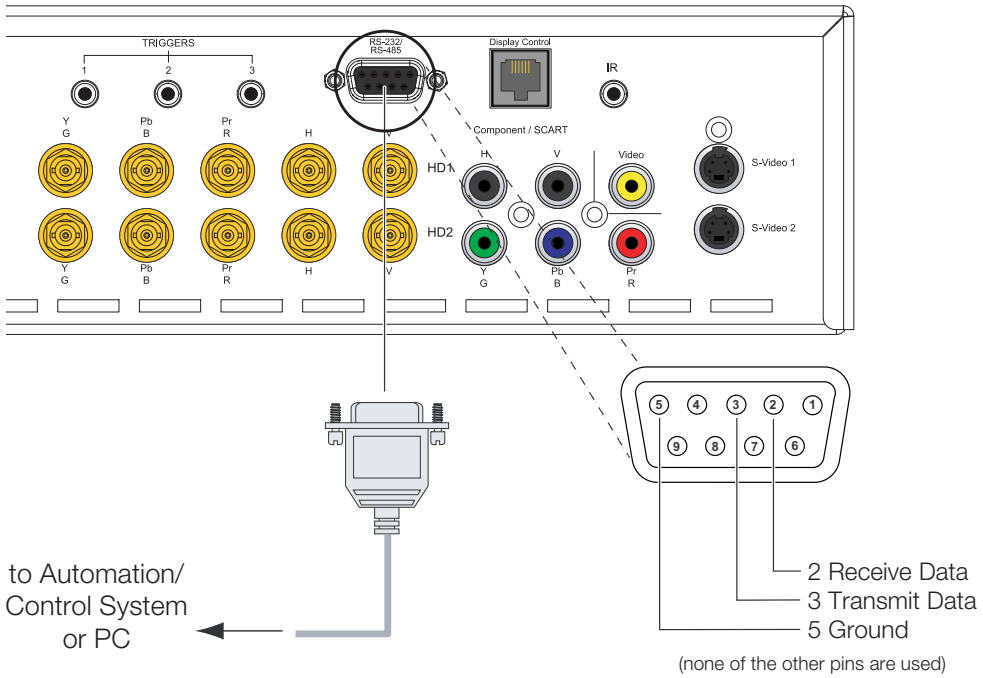

Figure 4-10. RS-232 Control System Connection

Connecting 12-volt Trigger Outputs to External Equipment

➤ If your installation includes equipment that responds to 12-volt triggers, connect it to the 12-volt trigger outputs as shown in Figure 4-11.

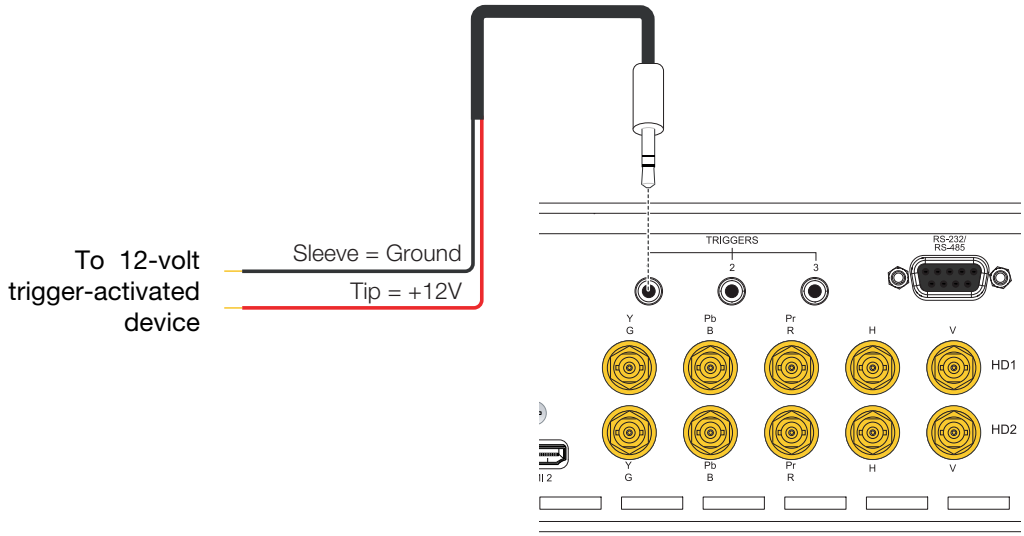

Figure 4-11. Connecting 12-volt Trigger Outputs

➤ *Connecting an External IR Receiver to the DHD Controller*

If infrared signals from the remote control cannot reach the DHD Controller due to excessive distance or obstructions such as walls or cabinet doors, you can connect an external IR receiver to the DHD Controller to extend the range of the remote control. See Figure 4-12.

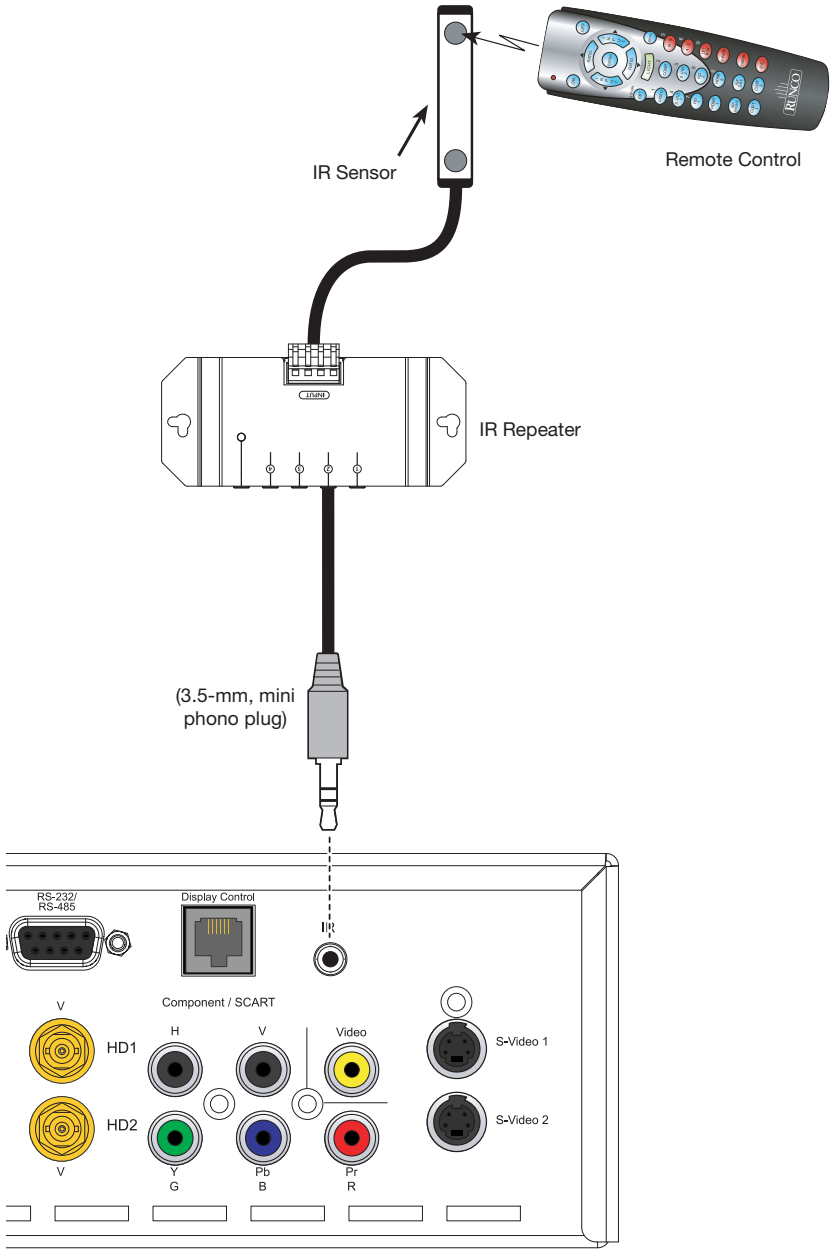

Figure 4-12. External IR Receiver Connection

4.7 Installing Batteries in the DHD Controller Remote Control

To install batteries in the DHD Controller remote control:

1. Press down the tab on the cover and pull the cover in the direction of the arrow.

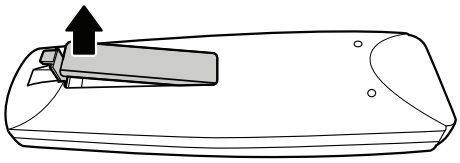

2. Insert the included batteries. Ensure that the polarities correctly match the ⊕ and ⊖ markings inside the battery compartment.

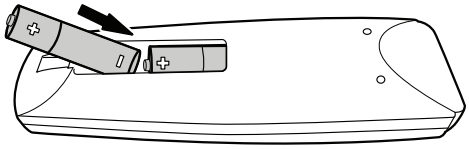

3. Insert the lower tab of the cover into the opening, and press down the cover until it clicks in place.

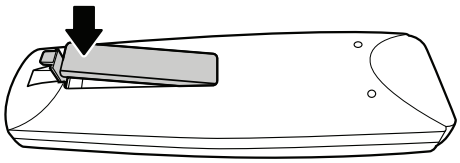

Notes on Batteries ➤

- When installing batteries, make sure that the battery polarities are correct.
- Do not mix an old battery with a new one or different types of batteries.
- If you will not use the remote control for a long time, remove the batteries to avoid damage from battery leakage.

Notes on Remote Control Operation ➤

The remote control can be used to control the CineWall within the ranges shown in Figure 4-13.

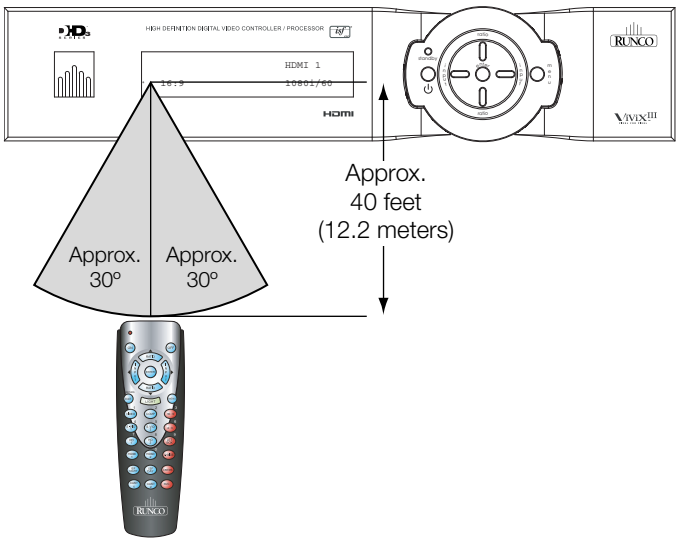

Figure 4-13. Available Range of the Remote Control

- Do not drop the remote control or expose it to moisture or high temperature.
- The remote control may malfunction under a fluorescent lamp. If that occurs, move the plasma display away from the fluorescent lamp.

- Make sure that there is nothing obstructing the infrared beam between the remote control and the IR receiver on the plasma display.

Note *The signal from the remote control can be reflected by walls or other surfaces.*

- If the effective range of the remote control decreases, or it stops working, replace the batteries with new ones.
- Ambient conditions may possibly impede the operation of the remote control. If this happens, point the remote control at the plasma display and repeat the operation.

4.8 Powering Up the CineWall and DHD Controller

➤ ***Connecting the DHD Controller to AC Power***

Plug the female end of the power cord into the AC receptacle on the rear of the DHD Controller. Then, connect the other end to your AC power source (AC 100V ~ 240V).

1. Turn on your source components.
2. Return the strut to the closed position and close the screen.
3. Gently press on the bottom left and right corners to engage the latches at the bottom of the screen.
4. Set the main power switch on the DHD Controller to the **ON** position.
5. Press the **ON** button on the remote control (or the **ON/STANDBY** (⏻) button on DHD Controller front panel) to turn on the system. The vacuum fluorescent display on the DHD Controller front panel briefly displays “Starting Display.”
6. When the CineWall is ready for use, the fluorescent display indicates the active source, input resolution/frame rate and aspect ratio; for example:

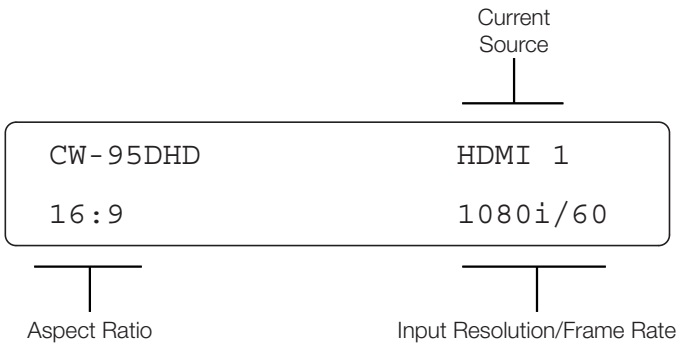

Notes:

5. Operation

5.1 On-Screen Display (OSD) Menus

To display the Main Menu, press the **MENU** button on the remote control (Figure 2-4) or DHD Controller front panel (Figure 2-2).

To select a menu item, use the ▲ and ▼ buttons on the remote control or DHD Controller front panel to highlight it. Then, to confirm your selection, press **ENTER** on the remote control or DHD Controller front panel.

The CineWall OSD menus are arranged hierarchically, as shown in Figure 5-1. Depending on the selected input source and signal characteristics, some menu options may not be available.

Input Source	Composite
	S-Video 1
	S-Video 2
	Component
	HD1
	HD2
	SCART
	HDMI 1
	HDMI 2
Aspect Ratio	16:9
	4:3
	Letterbox
	VirtualWide
	Cinema
	Virtual Cinema
	Native
Picture	Brightness
	Contrast
	Color
	Tint
	Sharpness
	Noise Filter
Input Position	Left/Right
	Up/Down
	Width
	Height
	Overscan
	Overscan Mode (Zoom/Crop)
	Phase (RGB/Component signals only)
	Tracking (RGB/Component signals only)
Memory Presets	Recall ISF Night
	Recall ISF Day
	Recall/Save Custom 1
	Recall/Save Custom 2
	Reset Custom 1 or Custom 2 to Factory Default
Information	Signal
	System
	Field Service
	Manufacturing

Calibration	Display Color	Gain	-100, -99... **0** ... 99, 100 (Red, Green, Blue or All)
		Offset	
		Gamma	**2.2** or 2.5
		Lamp	Power (156, 157, 158 ...**180** watts)
		Color Temp	Simple (3200K, 5500K or **6500K**)
		ConstantContrast	On/Off
	Input Image	Brightness	-50, -49 ... **0** ... 49, 50
		Contrast	
		Color	
		Tint	
		Sharpness	
	Input Color	Gain	-32, -31... **0** ... 31, 32 (HD 1, HD 2 and Component inputs only)
		Offset	
		Chroma Delay	**0**, 1, 2 ... 7 (S-Video 1, S-Video 2 and Composite inputs only)
		Noise Filter	**0**, 1, 2 ... 63
	Save ISF Night	Back / Confirm	
	Save ISF Day		
	Copy/Paste	Copy Settings	
		Paste Settings	
	Output Shift	Left/Right	-50, -49 ... **0** ... 49, 50
		Up/Down	
		Width	-50, -49, 48 ... **0**
		Height	
	Splash Configure	Owner Name	
		ISF Calibrated	
		ISF Other	
		Splash Timer	5, 6, 7 ... **15** ... 59, 60
		Splash Enable	On/Off
	OSD Position	Hor. / Ver.	**0**, 1, 2 ... 100

Figure 5-1. CineWall OSD Menu Structure

Service	Test Video	Color Bars 1	
		Color Bars 2	
		Focus	
		Grey Bars	
	Input Names	Rename/Restore	
	Remote Control	Remote Code	00, 01, 02 ... **17** ... 31
		COMP Key Source	**Component** or SCART
	Display Device - Configure	Installation	Picture Orientation: Floor Front, Ceiling Front, Floor Rear or Ceiling Rear
		Lamp Info (read-only)	Serial Number, Hours
		Lamp Hours Reset	Yes / No
		Diagnostics	White, Red, Green, Blue, Yellow, Cyan, Magenta
	Color Space	**Auto**, REC601, REC709, RGB-PC or RGB-Video	(Not available on S-Video or Composite video inputs)
	Triggers	1 / 2 / 3	
	Miscellaneous	Language	English, Français, Deutsch, Italiano. Español, Svenska, Traditional Chinese, Simplified Chinese, Português or Russian
		OSD Timer	0 (no timeout) or 5, 6, 7 ... **15** ... 60 sec.
		OSD Messages	On / Off
		Blank Screen Color	Red/Green/Blue = **0**, 1, 2, 3 ... 255
		Sidebar Color	
		Film Mode (SD sources only)	On / Off
		CUE (Chroma Upsampling Error)	On / Off
	HDMI EDID Extension	HDMI 1 / HDMI 2	**On** / Off
	Front Panel Brightness	Logo LED	0 (off), 1, 2 ... **31**
		Standby LED	**On** / Off
		LCD	0 (off), 1, 2, 3 or **4**
	System Reset		

Figure 4-1. CineWall OSD Menu Structure (continued)

Main Menu ➤ The Main Menu is the starting point for accessing all CineWall functions.

(You must enter a passcode to access the Calibration and Service menus. To obtain this passcode, contact Runco Technical Support.)

Runco Video
Input Source
Aspect Ratio
Picture
Input Position
Memory Presets
Information
Calibration
Service

From the Main Menu, select Input Source to choose a video signal source.

The active source is indicated by an arrow (➡) to its left; in this example, Composite is the active source.

◄ ***Input Source***

Input Source	
➡	Composite
	S-Video 1
	S-Video 2
	Component
	HD1
	HD2
	SCART
	HDMI 1
	HDMI 2

To change the aspect ratio (size and shape) of the projected image, select Aspect Ratio from the Main Menu and press **ENTER**. Select the appropriate aspect ratio for your screen size and the type of program material being viewed; refer to Table 5-1.

The currently-selected aspect ratio is indicated by a "☒" to its left; in this example, 16:9 is selected.

Note that some aspect ratios are unavailable and/or not useful with certain types of source material. The optimal setting depends on a number of factors, such as:

- The aspect ratio of the source material, as broadcast or encoded on the playback medium.
- The "display type" (16:9 or 4:3) and output resolution settings at the source component. Most modern DVD/BD players and set-top boxes have such controls.
- Viewer preference (original aspect ratio with "black bars," or a full-screen presentation with some distortion or cropping).

◄ ***Aspect Ratio***

Aspect Ratio	
☒	16:9
☐	4:3
☐	Letterbox
☐	VirtualWide
☐	Cinema
☐	Virtual Cinema
☐	Native

Note *The aspect ratio selection is automatically saved for each input and resolution.*

Table 5-1. Aspect Ratio Settings

Aspect Ratio	Remote Control Key	Aspect Ratio of Source Signal	Description	
16:9	16:9	16:9	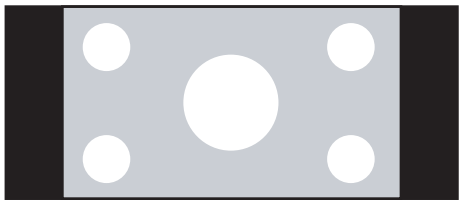	Select 16:9 to view 16:9 DVDs and HDTV programs in their native aspect ratio.
		4:3	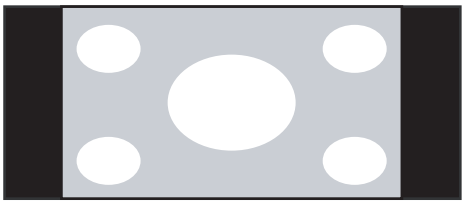	4:3 images are stretched horizontally to fit a 16:9 screen.
4:3	4:3	16:9	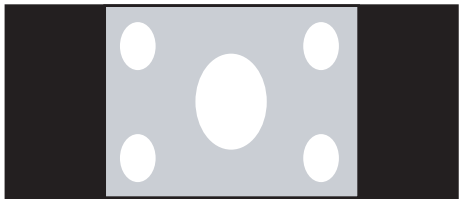	4:3 scales the input signal to fit in the center of the 16:9 screen. 4:3 is the aspect ratio used by computer monitors, standard television programming and most VHS video cassettes.
		4:3	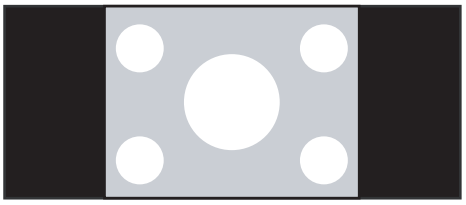	

Table 5-1. Aspect Ratio Settings (continued)

Aspect Ratio	Remote Control Key	Aspect Ratio of Source Signal	Description	
Letterbox	**LBOX**	**16:9**	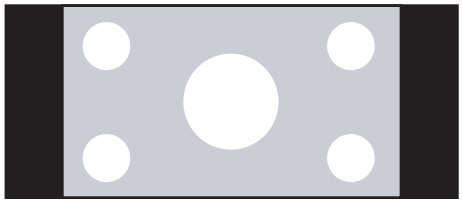	Letterbox mode scales (zooms in on) a 4:3 image linearly (by the same amount on all sides) to fill a 16:9 display. Letterbox is best suited for viewing LaserDisc movies or non-anamorphic DVDs on a 16:9 screen.
		4:3	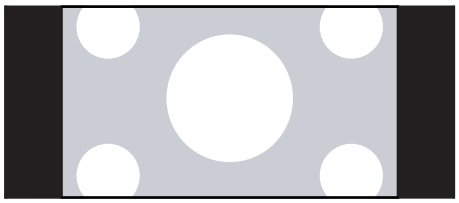	
VirtualWide	**VWIDE**	**16:9**	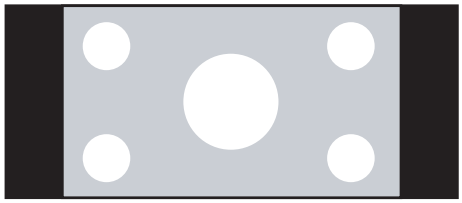	VirtualWide scales a 4:3 image NON-linearly (more on the sides than in the center) to fit a 16:9 screen. The image is centered between black bars on either side.
		4:3	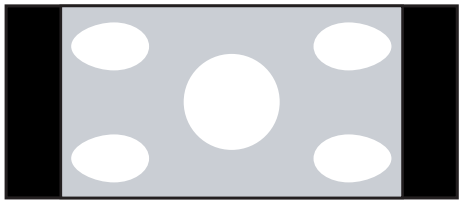	

Table 5-1. Aspect Ratio Settings (continued)

Aspect Ratio	Remote Control Key	Aspect Ratio of Source Signal	Description	
Cinema	**CINEMA**	**2.35:1**	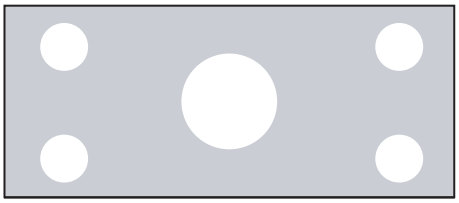	Select Cinema to view 2.35:1 source material in its native aspect ratio. Cinema masks the upper and lower portions of the screen to create a viewable area with a 2.35:1 aspect ratio. With 2.35:1 source material, the geometry of the active image area is unchanged. With 16:9 or 4:3 source material, the image area is enlarged on all sides to match the screen width.
		16:9	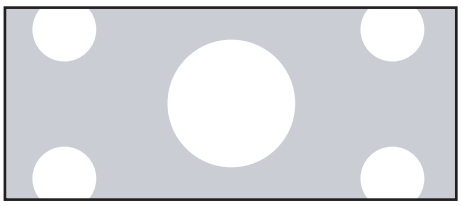	
		4:3	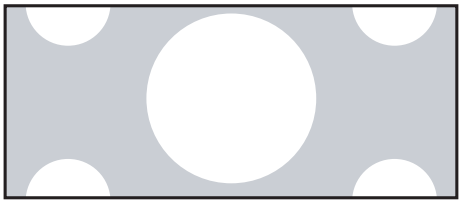	
Virtual Cinema	**SVC**	**16:9**	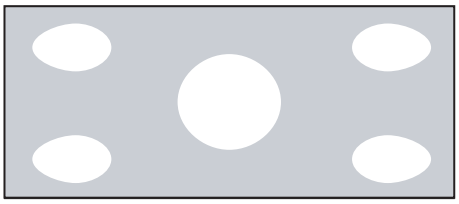	Virtual Cinema scales a 16:9 image NON-linearly (more on the sides than in the center) to fit a 2.35:1 screen.
		4:3	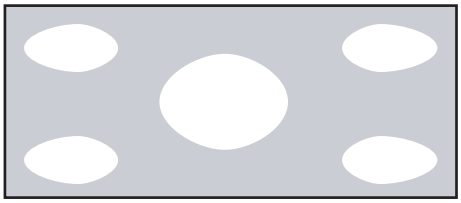	

Table 5-1. Aspect Ratio Settings (continued)

Aspect Ratio	Remote Control Key	Aspect Ratio of Source Signal	Description	
Native	**(none)**	**16:9**	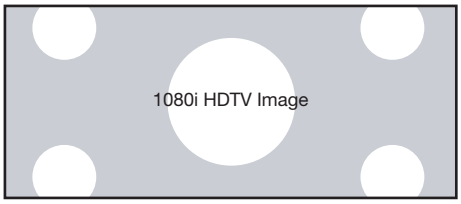 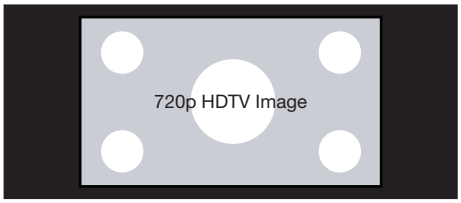	Select One to One to display the source signal in its native resolution, with no re-sizing or overscan. This means, for example, that 720p HDTV programs will display with unused pixels on all sides: 320 on the left and right sides and 48 above and below.
		4:3	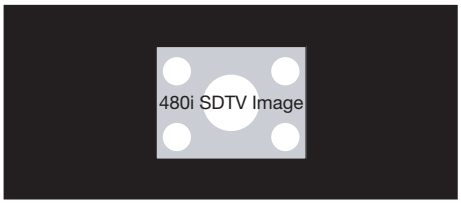 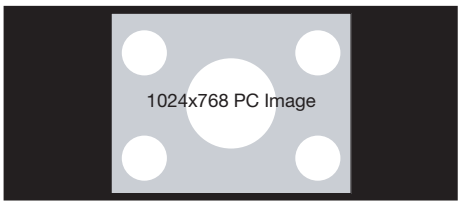	

Picture ➤

Picture
Brightness
Contrast
Color
Tint
Sharpness
Noise Filter

Use the controls in the Picture Menu to calibrate your CineWall for optimum picture quality.

The CineWall has been designed to incorporate setup and calibration standards established by the Imaging Science Foundation (ISF). The ISF has developed carefully crafted, industry-recognized standards for optimal video performance and has implemented a training program for technicians and installers to use these standards to obtain optimal picture quality from Runco video display devices. Accordingly, Runco recommends that setup and calibration be performed by an ISF certified installation technician.

All signal types require separate processing. Therefore, you need to calibrate each DHD Controller input separately.

Note

1. *When you change a picture quality setting, save the change to a preset afterwards. Otherwise, the change will be lost when a different input is selected. (Picture quality settings are saved for each input separately.) For information about saving settings, refer to* ***Memory Presets*** *on page 63.*
2. *For best results, Runco recommends that you set ConstantContrast to Off before adjusting Brightness, Contrast and other image quality settings in this menu (refer to* ***ConstantContrast*** *on page 66). After you have completed the initial calibration, set ConstantContrast to On if desired.*

Although it may be possible to obtain satisfactory picture quality using the naked eye and regular program material, Runco recommends using an external test pattern source (Ovation Multimedia, Digital Video Essentials or AVIA test DVD or equivalent) for best results.

Connect your test pattern source to the input that you are calibrating and proceed as follows. **Perform the adjustments in the order listed here.**

Brightness: On your external test pattern source, select a PLUGE pattern. (PLUGE is an acronym for “Picture Line-Up Generation Equipment.”) Figure 5-2 shows a typical PLUGE pattern.

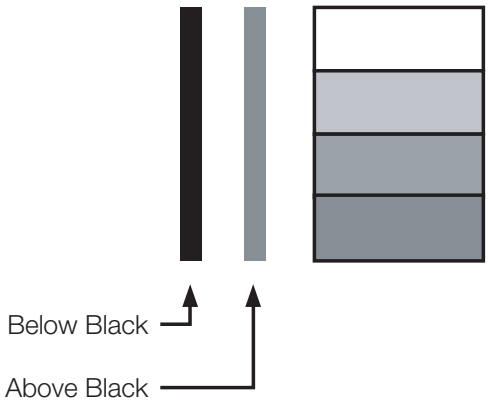

Figure 5-2. Typical PLUGE Pattern for Adjusting Brightness

PLUGE patterns vary but generally consist of some combination of black, white and gray areas against a black background. The example above includes two vertical bars and four shaded boxes.

Select Brightness from the Picture menu and press **ENTER**. Adjust the brightness so that:

- The darkest black bars disappear into the background.
- The dark gray areas are barely visible.
- The lighter gray areas are clearly visible.
- The white areas are a comfortable level of true white.
- The image contains only black, gray and white (no color).

Contrast: On your external test pattern source, select a stepped, gray-bar pattern like the one shown in Figure 5-3.

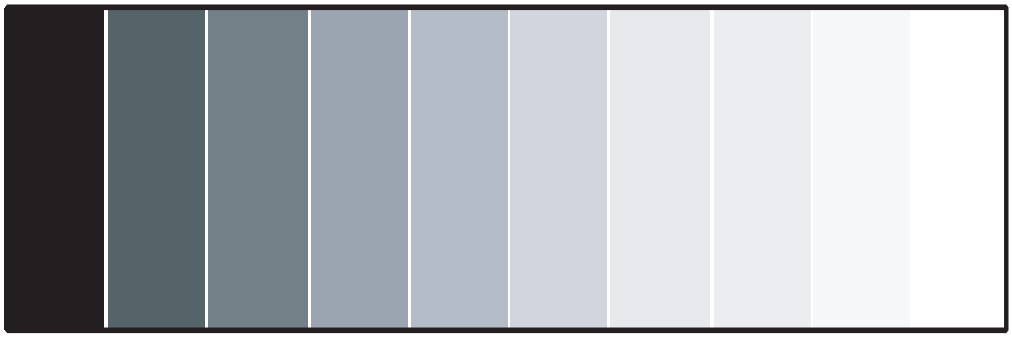

Figure 5-3. Typical Gray Bar Pattern for Adjusting Contrast

Select Contrast and press **ENTER**. Adjust the contrast to a point just below which the white rectangle starts to increase in size.

Note

Brightness and contrast controls are interactive. A change to one may require a subtle change to the other in order to achieve the optimum setting.

Color Saturation: On your external test pattern source, select a color bar pattern like the one shown in Figure 5-4.

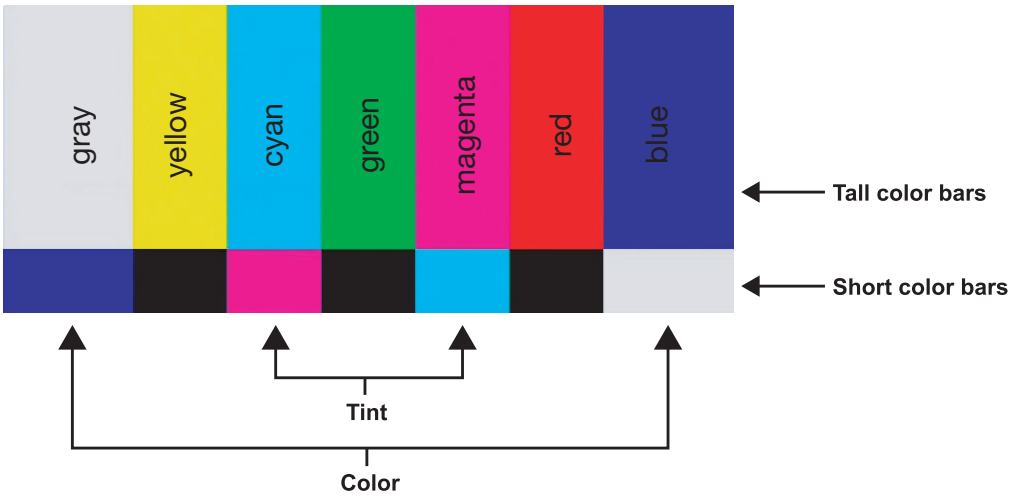

Figure 5-4. Typical Color Bar Pattern for Adjusting Color Saturation and Tint

1. Press the **MENU** button on the remote control or DHD Controller front panel.
2. Select Service from the Main Menu and press **ENTER**.
3. Enter the Service menu passcode.
4. Select Display Device from the Service menu and press **ENTER**.
5. Press **ENTER** again to select Configure.
6. Select Diagnostics and press **ENTER**.
7. Select Blue from the Diagnostics menu, then press **ENTER** to display only the blue color channel.
8. Press **MENU** repeatedly to return to the Main Menu.
9. Select Picture from the Main Menu and press **ENTER**.
10. Select Color from the Picture menu and press **ENTER**.

11. Adjust the color saturation level until the outermost (gray and blue) color bars appear to be a single shade of blue:

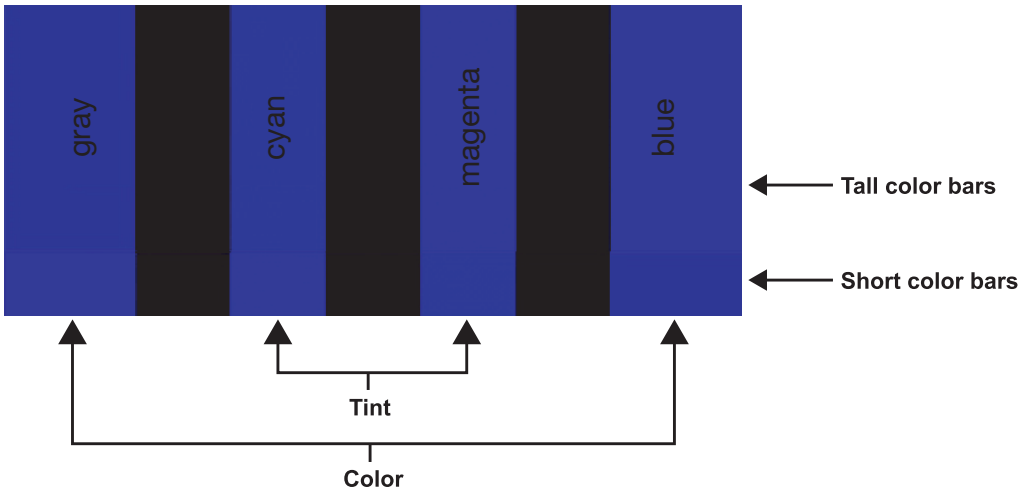

Tint: Tint or “hue” is essentially the ratio of red to green in the color portion of the image. When tint is decreased, the image appears redder; when it is increased the image appears greener.

To adjust the tint, enable “blue only” display mode in the Diagnostics menu, as you would for adjusting color saturation (refer to the previous section, ***Color Saturation***).

Select Tint from the Picture menu and press **ENTER**. Adjust the tint level until the cyan and magenta color bars (on either side of the green bar) appear to be a single shade of blue.

Note

Like the brightness and contrast controls, the color and tint controls are interactive. A change to one may require a subtle change to the other in order to achieve the optimum setting.

Sharpness: “Sharpness” is the amount of high-frequency detail in the image. To adjust sharpness, select Sharpness from the Picture menu and press **ENTER**. On your external test pattern source, select a pattern like the one shown in Figure 5-5. Adjust as needed, looking for white edges around the transitions from black to gray and differently-sized lines in the “sweep” patterns at the top and bottom. Lower the sharpness setting to eliminate them.

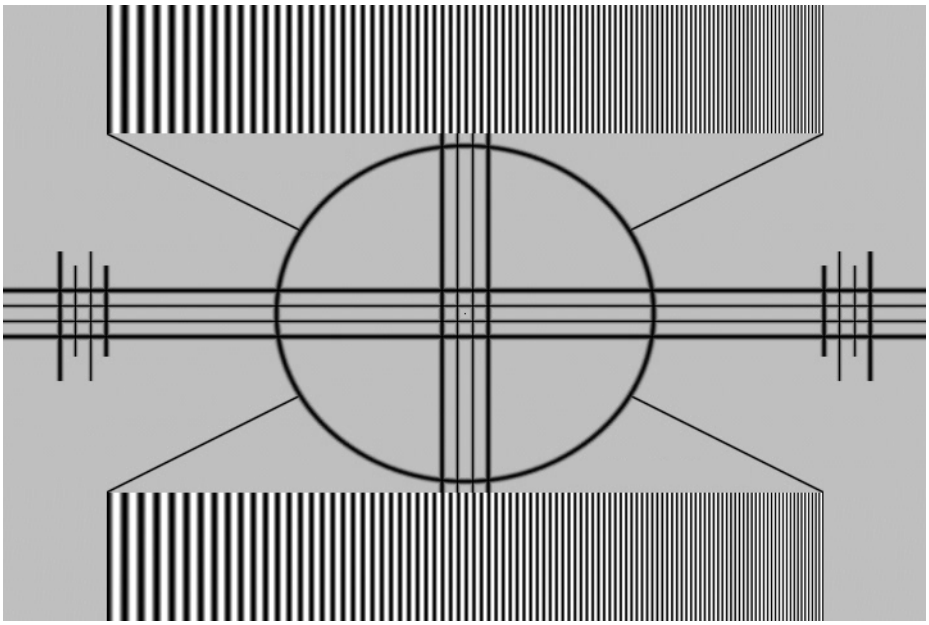

Figure 5-5. Typical Test Pattern for Adjusting Sharpness

Noise Filter: To apply noise filtering to the input signal, select Noise Filter from the Picture menu. The Noise Filter is useful for clearing up noisy images from 480i video sources.

Use the left- or right-arrow buttons to select the desired amount of noise reduction, keeping in mind that higher settings (which reduce high frequencies) may also “soften” the image.

Use the controls in the Input Position Menu to fine-tune the aspect ratio and image position for the current source.

◀ ***Input Position***

Input Position
Left/Right
Up/Down
Width
Height
Overscan
Overscan Mode
Phase
Tracking

Note *The input position settings are automatically saved for each input and resolution.*

Left/Right: Select Left/Right from the Input Position menu to shift the projected image horizontally. Press ▶ to shift the image to the right; press ◀ to shift it to the left.

Up/Down: Select Up/Down from the Input Position menu to shift the projected image vertically. Press ▶ to shift the image upward; press ◀ to shift it downward.

Width: Select Width from the Input Position menu to change the projected image width. Press ▶ to increase the width; press ◀ to decrease it.

Height: Select Height from the Input Position menu to change the projected image height. Press ▶ to increase the height; press ◀ to decrease it.

Overscan/Overscan Mode: Overscan pushes the outside edge of the active picture area of the video signal out beyond the edge of the display area.

Some television programs are produced based on the assumption that older television sets may not display the outer edges of the broadcast picture area. Overscan effectively trims away these inactive, outer edges and enlarges the remaining portion of the image to fill the display area.

For HDTV, DVDs and other video sources, Overscan is generally not necessary or desirable.

This control defines the amount of overscan applied to the image. The range is from 0 to 20. There are two overscan modes:

- In **Crop** mode, each increment adds a mask at the top, bottom, left and right edges of the source image equal to 0.5% of the displayed horizontal resolution (1% total). A setting of 10, for example, crops the image 5% on all sides or 10% total.
- In **Zoom** mode, each increment adds a factor to the scaling of the source image so that the vertical and horizontal resolutions are 100% plus 1% increments of the size determined by the aspect ratio function. A setting of 10, for example, zooms in on the image 5% on all sides or 10% total.

Figure 5-6 illustrates the effect of each overscan mode setting.

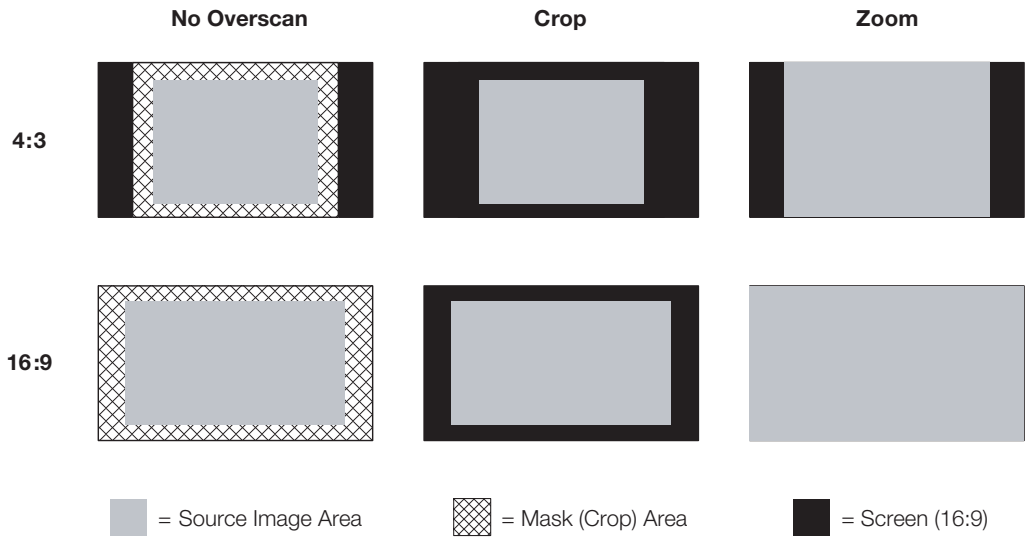

Figure 5-6. Overscan Modes

Phase (RGB or Component sources): This control adjusts the phase of the pixel sampling clock relative to the incoming signal. Adjust the phase when an RGB or Component image still shows shimmer or “noise” after Tracking has been optimized.

Tip *Adjust the Phase after adjusting Tracking (see below).*

For best results, use a good test pattern such as a smooth gray consisting of a clear pattern of black and white pixels, or a similar “half on, half off” graphic image. Adjust the slidebar until the image stabilizes and each pixel is clearly defined. You may notice that you can stabilize the image at more than one point. Use either setting in such cases.

Tracking (RGB or Component sources): Tracking determines the frequency of the pixel sampling clock, indicated by the number of incoming pixels per line, so that all pixels generated by a particular source are sampled.

Steady flickering or several soft vertical stripes or bands across the entire image indicates poor pixel tracking. Proper pixel tracking helps ensure that the image quality is consistent across the screen, that aspect ratio is maintained and that pixel phase (see above) can be optimized.

➤ *Memory Presets*

Memory Presets		
➡ ISF Night		
ISF Day		
Custom 1	Save	Reset
Custom 2	Save	Reset

For each input, the CineWall lets you save image quality settings as presets that you can recall at a later time. You can create up to four presets per input and display mode (resolution and frame rate).

The DHD Controller stores the following display modes in each memory preset:

- 480i
- 480p
- 576i
- 576p
- 720p/24 Hz
- 720p/25 Hz
- 720p/30 Hz
- 720p/50 Hz
- 720p/60 Hz
- 1080i/50 Hz
- 1080i/50 Hz (Australia)
- 1080i/60 Hz
- 1080p/24 Hz
- 1080p/25 Hz
- 1080p/30 Hz
- 1080p/50 Hz
- 1080p/60 Hz

Use the Memory Presets menu to recall saved image presets, or to save image settings in the “Custom 1” or “Custom 2” memory location. The currently-selected preset is indicated by a “➡” to its left; in the example shown here, ISF Night is selected.

You should save changes to any of the following settings to a preset; otherwise they will be lost when a new input source or resolution is selected:

- Brightness
- Contrast
- Color Saturation
- Tint
- Sharpness
- Gamma
- Lamp settings
- Color Temp and white balance (Gain, Offset)

To select a memory preset, press ▲ or ▼ to highlight it and press **ENTER**.

To save the settings for the current input and display mode to the Custom 1 or Custom 2 memory preset, select it, press ◀ or ▶ to highlight Save and press **ENTER**.

Note

To save the settings for the current input and display mode to the ISF Night or ISF Day memory preset, select Save ISF Night or Save ISF Day from the Calibration menu (refer to ***Save ISF Night/Save ISF Day*** *on page 67).*

To reset the Custom 1 or Custom 2 memory preset to its factory-default state, select it, press ◀ or ▶ to highlight Reset and press **ENTER**.

Information ➤

Information
Signal
System
Field Service
Manufacturing

Signal / System: Select Information from the Main Menu, then choose either Signal or System to display information about the current input signal (resolution, frequency, type et cetera) and installed firmware versions, as well as other information that uniquely identifies your DHD Controller and display device.

Should you ever need to contact Runco Technical Support, this information will help them answer your questions or resolve product performance issues.

Signal	
Input Source	HDMI 1
Signal Format	1080p/60
Input Resolution	1920x1080
Vertical Freq	59.94 Hz
Horizontal Freq	67.500 kHz
Pixel Clock	148.500 MHz
Color Space	REC709
Sync Type	Separate
Memory Preset	ISF Night

System	
Model	DHD3
Display Name	CW-95DHD
Output Resolution	1920x817
Serial Number	00000000
Boot Version	1.0
Firmware Version	1.0
Micro Version	1.0

Field Service / Manufacturing: The Field Service and Manufacturing menus are password-protected and intended for use only by Runco service personnel and factory technicians.

Calibration ➤

Calibration
ISF Settings
Display Color
Input Image
Input Color
Save ISF Night
Save ISF Day
Copy/Paste
Output Shift
Splash Configure
OSD Position

Use the Calibration menu to perform advanced picture quality adjustments. **This menu should be used by ISF-certified technicians only.**

Note *You must enter a passcode to access the Calibration menu.*

To recall the ISF Night or ISF Day settings, select “ISF Night” or “ISF Day” from the Memory Presets menu (see page 63) or use the corresponding remote control buttons.

Display Color: Use the Display Color settings to adjust the color balance at the DHD Controller output. These settings are saved independently for each input and display mode.

- **Gain:** Use the Gain controls to correct color imbalances in the bright areas of the image. A good way to do this is to use a test pattern consisting mostly of solid white areas, such as an 80 IRE “window” pattern. If the white areas contain traces of red (Pr), green (Y) or blue (Pr), decrease the Gain for that color.
- **Offset:** Use the Offset controls to correct color imbalances in the dark areas of the image. A good way to do this is to use a test pattern consisting mostly of dark gray areas, such as a 30 IRE “window” pattern. If the gray areas contain traces of red (Pr), green (Y) or blue (Pr), decrease the Offset for that color.

- **Gamma:** Select Gamma from the Display Color menu to choose a de-gamma curve. Used correctly, the Gamma control can improve contrast while maintaining good details for blacks and whites. If excess ambient light washes out the image and it becomes difficult or impossible to see details in dark areas, lower the gamma setting to compensate. This improves contrast while maintaining good details for blacks. Conversely, if the image is washed out and unnatural, with excessive detail in black areas, increase the setting.
- **Lamp:** Select Lamp from the Display Color menu to adjust the projector lamp brightness.
  - **Power:** To supply a constant wattage to the lamp, select Power from the Lamp menu to set the lamp power level. You can choose to run the lamp as bright as possible (this is the default setting) or you can choose a lower setting. The range is from 156 to 180 watts, in 1-watt increments. Generally, lower lamp output prolongs the life of the lamp, but decreases brightness.
- **Color Temp:** Select Color Temp from the Display Color menu to adjust the color temperature. Color temperature establishes the “color of gray” by adjusting the 75% white point to various color points.

  What are “color points?” A “color point” is an x/y coordinate pair that defines a color’s location on the standard CIE chromaticity graph, shown in Figure 5-7. (CIE stands for “Commission Internationale de l’Éclairage” (International Commission on Illumination), the organization responsible for color measurement and management standards.)

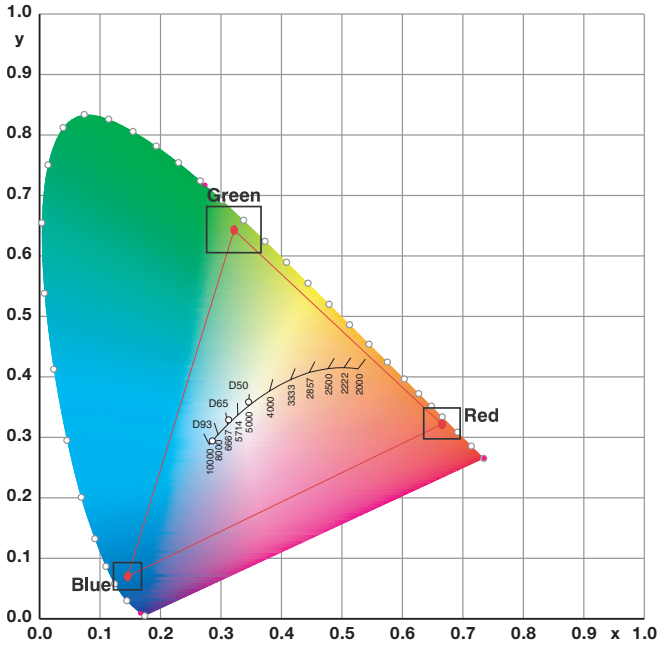

Figure 5-7. CIE 1931 Chromaticity Diagram

- **Simple:** Select Simple mode from the Color Temp menu (with the CineWall, this is the only choice) to choose one of three color temperature presets: 3200K, 5500K or 6500K. The default setting, 6500K, is appropriate for most situations. Higher settings produce a “bluer” picture; lower ones impart a reddish hue to the image.

  Table 5-2 lists the x- and y-coordinates for each color temperature preset in “Simple” mode.

Table 5-2. Color Temperature Presets and Associated Color Points

Color Temperature Preset	Associated x/y Values	
	x	y
3200K	0.423	0.404
5500K	0.332	0.348
6500K	0.313	0.329

- **ConstantContrast:** Select ConstantContrast from the Display Color menu to enable (On) or disable (Off) ConstantContrast in the optical engine. ConstantContrast uses a dynamic iris that modulates light to the DMD based on the actual content of the video material. Runco recommends that you disable ConstantContrast before adjusting Brightness, Contrast or other image settings.

Input Image: The Input Image controls are functionally similar to those in the Picture menu (refer to page 56), but are accessible only by entering the Calibration menu passcode.

Note

The Input Image settings establish the “zero point” for the Picture menu settings, whose values represent offsets from the Input Image settings. For example, if you set Brightness to 10 in this menu, setting Brightness to 10 in the Picture menu results in an actual setting value of 20 (10+10).

Input Color: The Input Color controls are similar to those in the Display Color menu (see above), but adjust the color balance of the incoming signal. These settings are also saved independently for each input and display mode.

- **Gain/Offset (HD1, HD2 and Component/SCART inputs only):** These controls operate similarly to those in the ***Display Color*** menu (described on page 64), but affect the Y, Pb and Pr signal components rather than the red, green and blue channels.
- **Chroma Delay:** use the Chroma Delay control to correct a mis-aligned image from a Composite or S-Video source. Chroma delay in an image causes color shifts to occur to the left of the vertical edge transitions, producing artificial shadows or a “halo” effect. If necessary, adjust this setting to eliminate them.
- **Noise Filter:** To apply noise filtering to the input signal, select Noise Filter from the Input Color menu. The Noise Filter is useful for clearing up noisy images from 480i video sources.

  Use the left- or right-arrow buttons to select the desired amount of noise reduction, keeping in mind that higher settings (which reduce high frequencies) may also “soften” the image.

Save ISF Night/Save ISF Day: Whenever you make a change to the ISF settings, you should always save it. Select Save ISF Night or Save ISF Day from the Calibration menu to do this.

Copy/Paste: You can copy and paste settings from one memory location to another. This gives you a convenient starting point for creating a new preset based on an existing one, to make the calibration process less time-consuming.

Copy/Paste	
Copy Settings	
Paste Settings	
Copied From:	
Input Source	HDMI 1
Signal Format	1080p/60
Memory Preset	ISF Night

For example, you can use the Copy/Paste feature to:

- Apply settings from HDMI 1 to HDMI 2, or from HD1 to HD2.
- Calibrate an input for 720p source signals, then use those settings for 1080i sources.
- Duplicate ISF Night settings for a given source and signal format and save them in the Custom 1 memory preset.

To use this feature, select Copy/Paste from the Calibration menu.

- **Copy Settings:** Select Copy Settings from the Copy/Paste menu to place the settings for the current input source, signal format (resolution and frame rate) and memory preset onto a “clipboard,” which is a temporary memory location. When you do, the message “Settings Copied” briefly appears on-screen. The Copy/Paste menu then re-appears, indicating the source of the copied settings.

Note *Copied settings are not retained after a power cycle.*

- **Paste Settings:** To apply the settings on the clipboard to a different input source, signal format and/or memory preset, do **any or all** of the following:
  - Switch to another DHD Controller input (for example, from HD1 to HD2).
  - Change the output signal format at the source (for example, from 720p/60 to 1080i/60).
  - Switch to another Memory Preset (for example, from ISF Night to Custom 1).

  Then, select Paste Settings from the Copy/Paste menu. ***If you want to keep these new settings, you must save them!*** (Refer to ***Save ISF Night/Save ISF Day*** on page 67 or ***Memory Presets*** on page 63.)

Output Shift: The controls in the Output Shift menu are similar to those in the Input Position menu, except that they change the characteristics of the output signal. These settings are saved independently **for each aspect ratio**.

Splash Configure: Use the Splash Configure menu to control the appearance and behavior of the “splash” screen that appears on the display upon power-up.

- **Owner Name/ISF Calibrated/ISF Other:** You can have the CineWall display the owner’s name, your name, the phrase “ISF Calibrated” and/or any other string, up to 30 characters in length.

  Use the up or down cursor button to select a character. Use the right and left cursor buttons to change the cursor position. Press **MENU** when you have finished entering text.
- **Splash Timer:** When you turn on the CineWall, it projects a welcome screen with the Runco and ISF logos, along with the personalized information you enter as described above. Select Splash Timer from the Splash Configure menu to set the amount of time for which this screen appears. The range is from 5 to 60 seconds, in one-second increments. Press ◀ or ▶ to set the timer, then press **MENU**.

- **Splash Enable:** When you have finished customizing the splash screen, select Splash Enable from the Splash Configure menu. Then, select On and press **ENTER**.

OSD Position: To adjust the position of the OSD, select OSD Position from the Calibration menu and press **ENTER**.

Press ▲ or ▼ to select “Hor.” or “Ver.” Then, press ◀ or ▶ to change the position.

Service ➤

Use the Service menu to access advanced display configuration settings. **This menu should be used by ISF-certified technicians only.**

Service
Test Video
Input Names
Remote Control
Display Device
Color Space
Triggers
Miscellaneous
HDMI EDID Extension
Front Panel Brightness
System Reset

Note *You must enter a passcode to access the Service menu.*

Test Video: Select Test Video from the Service Menu to access the internal test patterns on the CineWall. Four patterns are available: Horizontal Ramp, Vertical Ramp, Color Bars 1 (solid bars) and Color Bars 2 (SMPTE “checkerboard” pattern).

Press **MENU** to exit test pattern mode.

Input Names	Restore
Composite	Composite
S-Video 1	S-Video 1
S-Video 2	S-Video 2
Component	Component
HD 1	HD 1
HD 2	HD 2
SCART	SCART
HDMI 1	HDMI 1
HDMI 2	HDMI 2

Input Names: You can give each DHD Controller input a descriptive name. For example, you may want to change the default input name to the type of source component connected to it: “VCR,” “DVD,” “Laptop” et cetera. Input names can be up to 12 characters long.

To edit an input name, select Input Names from the Service menu. Press ▲ or ▼ to select an input and press **ENTER**. Use the ▲ or ▼ buttons to change a character; press ◀ or ▶ to select a character to change. When you have finished editing the input name, press **ENTER** or **MENU**.

To restore the default input name, press ▼ repeatedly to highlight that input name in the “Restore” column. Then, press **ENTER**.

Remote Control: Select Remote Control from the Service menu to change the following settings related to remote control operation.

- **Remote Code:** Select Remote Code from the Remote Control menu to set the infrared (IR) code set to which the CineWall will respond. By default, it is set to 17. You can change this setting if either:
  - Another device in the theater (a DVD player, for example) is responding to commands from the DHD Controller remote control (Figure 2-4) in ways that are unpredictable or undesirable.
  - You have multiple DHD Controllers and want to control them independently, as opposed to broadcasting commands from a single remote to all of them. In this scenario, you can use multiple remotes programmed to use different IR codes. Or, you can use a single remote and change the IR code as needed to address a specific DHD Controller.

  Tip *Use the DHD Controller front-panel keypad to change the IR code to which the controller will respond. Then, change the code sent by the remote to match as described below.*

  When you change a remote code on the CineWall, you must re-program the CineWall remote control to send that same code. To do this:

  1. Press and hold the **LIGHT** button on the remote control for approximately three seconds, or until the LED on the remote lights solid red.
  2. Enter a new two-digit code between 00 and 31 inclusive. Include a leading zero for single-digit codes; for example, enter 9 as “09.”
  3. The LED turns off to confirm the code change. If you enter an invalid code, the LED flashes for three or four seconds. Try again, entering a valid code.

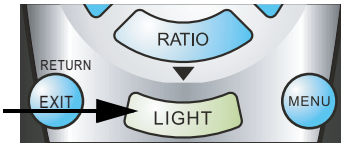

- **COMP Key Source:** Select COMP Key Source from the Remote Control menu to assign the COMP remote control button to either the Component or SCART input.

Display Device - Configure: The options in the Display Device - Configure menu allow you to change the picture orientation and access other, display-device specific functions.

- **Installation – Orientation:** Select Installation from the Display Device - Configure menu, then select Orientation to change the picture orientation to suit the method of installation (Floor Front, Floor Rear, Ceiling Front or Ceiling Rear).
- **Lamp Info:** Select Lamp Info from the Display Device - Configure menu to obtain information about the currently-installed lamp: its serial number and number of hours in use.
- **Lamp Hours Reset:** When you replace the projector lamp (refer to ***Lamp Replacement*** on page 75), you should also reset the lamp hour counter to zero so that the lamp usage information in the Lamp Info window is accurate. To do this, select Lamp Hours Reset from the Display Device - Configure menu. A confirmation dialog box appears. Select “Yes” to continue with the reset or “No” to cancel the operation.
- **Diagnostics:** Select Diagnostics from the Display Device - Configure menu, then select Red, Green, Blue, Yellow, Cyan or Magenta to display only that color channel (simulating a filter of that color). This can be useful for calibration or measurement purposes.

  To restore the normal picture (all colors), select White.

Color Space: Select Color Space from the Service menu to choose the color space of the source signal for HDMI, RGB, and component connections.

- The default setting, **Auto**, functions as follows:
  - **HDMI:** If the Auxiliary Video Information (AVI) infoframe contains color space and/or range data, the CineWall uses that information. Otherwise, for RGB sources, the CineWall uses the **RGB-Video** color space. For component SDTV and EDTV resolutions, **REC601** is used. For other component video resolutions, **REC709** is used.
  - **RGB:** If Hsync or Vsync signals are present, the CineWall uses the **RGB-PC** color space. Otherwise, **REC601** is used for SDTV and EDTV sources, and **REC709** for all other sources.
  - **Component:** For SDTV and EDTV resolutions, the CineWall uses the **REC601** color space. For all other resolutions, REC709 is used.

In most cases, the **Auto** setting determines the correct color space to use. If it does not, you can force the CineWall to use a specific color space. Choose one of the following:

- **REC709** sets the color space matrix to that defined in ITU-R BT.709.
- **REC601** sets the color space matrix to that defined in ITU-R BT.601.
- **RGB-PC** uses RGB color space and sets black at 0,0,0 RGB and white at 255,255,255 RGB, assuming an 8-bit image.
- **RGB-Video** uses RGB color space and sets black at 16,16,16 RGB and white at 235,235,235, assuming an 8-bit image, to correspond to the luminance values defined in digital component standards.

Triggers: Select Triggers from the Service menu to configure the 12-volt trigger outputs. You can assign one or more trigger outputs to each aspect ratio. Those triggers are then activated by selecting that aspect ratio.

Miscellaneous: Select Miscellaneous from the Service menu to set the following options:

- **Language:** Select Language from the Miscellaneous menu and press the up- or down-arrows to select the OSD Language (English, Français, Deutsch, Italiano, Español, Svenska, Traditional Chinese, Simplified Chinese, Português or Russian).
- **OSD Timer:** Select OSD Timer from the Miscellaneous menu to set the OSD Timer, which controls how long the menus remain on-screen after selecting them. Select from 5 to 60 seconds, in one-second increments. Or, set the timer to 0 (disabled) if you want the menus to remain on-screen indefinitely.
- **OSD Messages:** When you select a new aspect ratio, input source or memory preset, the DHD Controller briefly displays an on-screen message confirming your new selection. To prevent the display of these messages, select OSD Messages from the Miscellaneous menu to and set it to Off.
- **Blank Screen Color:** Select Blank Screen Color from the Miscellaneous menu to select the color that appears when no incoming signal is present. The range is from 0 to 255 inclusive for each color component (red, green and blue).
- **Sidebar Color:** Select Sidebar Color from the Miscellaneous menu to change the color of the inactive image area. The range is from 0 to 255 inclusive for each color component (red, green and blue). The inactive image area is on either side of the active image area when using the 4:3 aspect ratio.
- **Film Mode:** Use Film Mode to smooth out moving images from interlaced, standard-definition (SD) sources. In most cases, the CineWall detects the proper “pull-down” rate and vertical frequency. However, if your source is jittery and/or tearing you may want to enable Film Mode to ensure stable processing for that source.

- **CUE (Chroma Upsampling Error) Correction:** Some DVD players use MPEG decoders that do not correctly “upsample” the 4:2:0 format chroma information on the DVD to the 4:2:2 or 4:4:4 format required by the video encoder of the display device.

  This so-called “chroma bug” sometimes causes streaky or spiky horizontal lines running through the chroma channel. It is most noticeable in static, interlaced scenes and on diagonal edges (especially red ones). Set CUE to On to correct this issue.

HDMI EDID Extension: Extended display identification data (EDID) is a data structure provided by a display device to describe its capabilities to a graphics card. It is what enables a modern personal computer to know what kind of monitor is connected.

Some modern display devices provide more information via EDID than others, in the form of “extensions.” Some computer graphics cards do recognize or properly interpret this extended EDID information.

Select HDMI EDID Extension from the Service menu to specify whether or not the EDID extensions from the display device are passed through to the sources connected to the HDMI 1 or HDMI 2 inputs. By default, the extensions are on. Change these settings only if HDMI EDID incompatibility issues arise.

Front Panel Brightness: Select Front Panel Brightness from the Service menu to adjust the brightness of the front-panel LED and LCD status indicators.

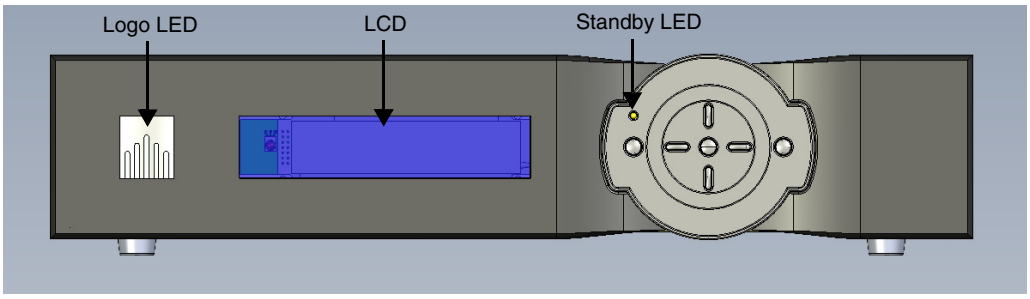

- **Logo LED:** Select Logo LED from the Front Panel Brightness menu to adjust the brightness of the large, illuminated logo on the left side of the display. The range is from 0 (off) to 31.
- **Standby LED:** Select Standby LED from the Front Panel Brightness menu to change the behavior of the front-panel STANDBY indicator LED. When set to ON, the LED lights amber when the system is in standby mode; otherwise, it is off. When set to OFF, the LED is always off.
- **LCD:** Select LCD from the Front Panel Brightness menu to adjust the brightness of the front-panel LCD. The range is from 0 (off) to 4.

System Reset: To reset ALL controller settings (including image settings) back to their factory defaults, choose System Reset from the Service menu.

A confirmation message appears. Select Yes to continue with the reset or select No to cancel.

Caution ***This action is not undoable. Proceed with caution!*** *Before you perform a System Reset, save your “Custom” Memory Presets (page 63) and ISF Day/Night Memory Presets (page 67).*

Notes:

6. Maintenance and Troubleshooting

6.1 Cleaning

➤ ***Cleaning the Screen, Mirrors and Lens***

Dirt is everywhere, and unless the CineWall is in a super-clean room, from time to time you will need to clean the screens, mirrors and/or lens.

Cleaning products and how to use them: For mirrors and screens, a foam spray cleaner works well. It is sold under different names in different parts of the world. It is available from many janitor supply companies or building maintenance supply companies. Ask for Claire #50 glass cleaner, or Sprayway #50 glass cleaner. It is probably sold under a local name, but it all comes from one company. If you ask for either of the two names above (it is sold under both), you will get this cleaner under the local name.

This cleaner contains no ammonia and works well on glass (screens, lenses, mirrors) and acrylic (screens). Spray it on the mirror, but not on the screen. ***For screens, spray it on the cloth, not the screen.***

WARNING ***DO NOT spray liquid of any kind on the screen.*** *It can drip down the screen and wick up between the layers. When liquid gets between the screen layers, it is impossible to remove, and the screen is ruined!*

WARNING ***DO NOT wipe the inside of the screen for any reason.*** *This can cause immediate and permanent damage to the screen.*

Wipe the mirror or screen gently with a lint-free cloth or lint-free paper (refer to ***Cloth to use***, below). Turn the cloth over to the dry side and continue wiping to take up the haze.

- Glass Wax™ is another good cleaner for mirrors and glass screens, but it does not work well on acrylic screens. It is a liquid in a can. You spread it on, let it dry, then wipe it off.
- Windex™ works well, too. ***Just don't spray it on the screen.***

Cloth to use: White cotton cloth is better for cleaning than colored cloth. The dyes in some colored cloth tend to make it less absorbent.

Paper towels tend to leave lint and are therefore not recommended for cleaning lenses. A better paper towel for cleaning is Scott® Shop Towels. These blue, lint free, paper towels are widely available at auto parts stores, home improvement stores and hardware stores.

Cheesecloth is another good choice. This open-weave cotton material is light and absorbent.

Removing dry dust: Often the cleaning problem is just dust, not fingerprints or other oily dirt. If it's just dust, wiping with a dry cheesecloth or a dry Shop Towel will usually do the job.

Or use one of the cleaning products designed specifically for picking up dust.

- Pledge Grab-It™, from Johnson
- Swiffer™, from Proctor and Gamble.

These are synthetic wipes that have a static charge that holds onto dust. They do a very good job of picking up dust and leaving no lint behind. However, they will not wipe away grease or oil, such as fingerprints, and they can't be used with liquid cleaners.

Cleaning lenses: Clean lenses as you would the glass mirrors. Use a soft, absorbent cotton cloth rather than a paper towel. Because the lens is small, it is easier to spray the cleaner (if you use one) on the cloth, not the lens itself.

Where is the dirt? ➤ When you see dirt in the picture, you can sometimes tell where it is by its focus. Use a white test pattern to see the dirt most easily.

Small specs of dirt or dust that are in very sharp focus are on the screen itself.

If the dirt is in soft focus, it is probably a smudge on the large mirror.

Dirt on the output lens cannot be seen in the picture. However, that does not mean you should not clean this lens. Dirt here will reduce the brightness of the picture, but it won't show up as specs in the picture.

6.2 Lamp Replacement

Change the lamp after 6,000 hours of use, or sooner if you notice a significant decrease in brightness.

➤ *Removing the Old Lamp*

1. Open the screen.
2. Turn off the AC power switch and remove the power cord.
3. Loosen the six screws holding the display engine compartment cover in place. Then, remove the cover.

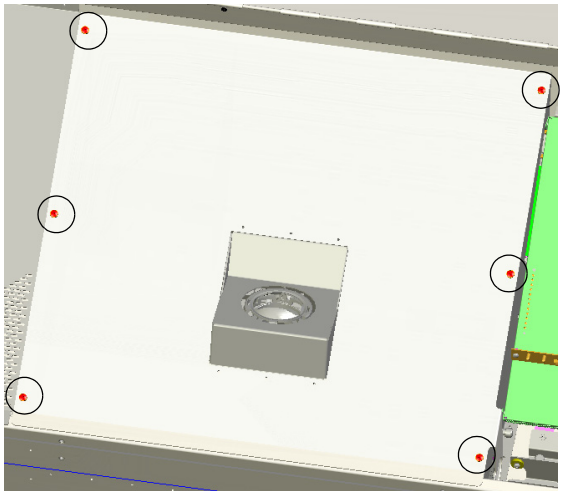

4. Loosen the lamp screw to the right rear of the lamp.
5. Disconnect the lamp cable.

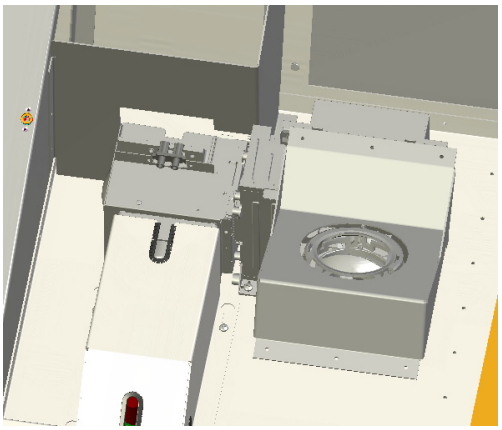

6. Pull the lamp away from you, then straight up.

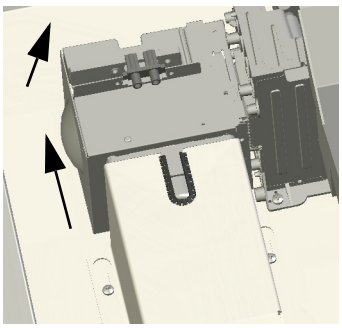

Installing the New Lamp ➤

1. Re-connect the lamp cable you disconnected in Step 5 above. Make sure it is fully seated.

   WARNING *If the lamp cable is not fully seated on the lamp plug, the lamp will not operate properly. Overheating may occur.*

2. Mount the lamp in its place. Note the two pins opposite the lamp screw. These fit into holes in the optical engine.
3. Tighten the screw you loosened in Step 4 above.
4. Replace the display engine compartment cover.
5. Re-connect the AC power cord and set the main power switch to the “on” position.
6. Close the screen.

Resetting Lamp Hours ➤

ALWAYS reset the lamp hours to zero when you install a new lamp. To do this:

1. Turn on the CineWall.
2. Press **MENU** on the remote control and select ***Service*** from the Main Menu (passcode required).
3. Select ***Display Device - Configure*** from the ***Service*** menu.
4. Select ***Lamp Hours Reset***, highlight “Yes” and press **ENTER**.

How to Maintain Lamp Life ➤

There are some actions that can shorten lamp life:

- Turning off AC power when the lamp is on. (Turn off the lamp with the remote and let it cool until the fans stop; then turn off AC.)
- Turning a lamp on and off rapidly. (The lamp should be allowed to heat up fully before turning it off, at least three minutes.)

6.3 Filter Replacement

Clean, cool air is essential for proper CineWall operation.

When the air filter gets dirty, change it. Unfortunately, there is no absolute rule about when to change an air filter. For some installations the environment has clean, dust-free air, in which case the air filter may be good for a year or more.

In other environments, the air full of dust and dirt all the time. The air filter might have to be changed every month. Of course, it also depends on how many hours per day or per week the lamp is on.

Determining a Changing Schedule ➤

Remove and inspect the air filter after three months of operation. Make a note of the air filter’s condition. Check it again after six months of operation.

These two inspections will give you some idea of how often the filter needs changing. If it doesn’t need changing after six months, inspect it again in a year. As long as the environment doesn’t change, you can build an appropriate schedule in this way.

If new construction occurs in the vicinity of the CineWall, beware; new construction usually means DUST.

➤ *Removing the Air Filter*

1. Open the screen.
2. Turn off the AC power switch and remove the power cord.
3. Lift the air filter up and toward you. Then, replace it with a new one (Runco part number 379-0012-00).

6.4 Troubleshooting Tips

The CineWall provides several features for identifying and resolving product performance issues. If the solutions suggested here fail to resolve your issue or if you encounter an issue not described, please contact Runco Technical Support.

➤ *Status LEDs*

The LEDs on the electronics module can give you more detailed information about the current operational state of the CineWall. To see them, open the screen.

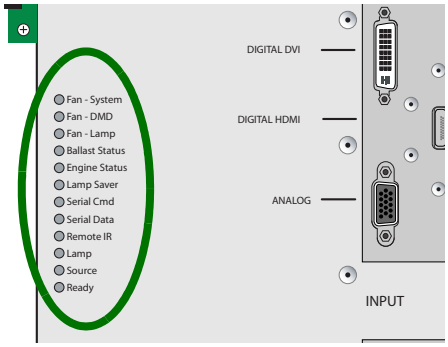

Table 6-1 describes the CineWall LED status indications.

Table 6-1. CineWall Status LED Indications

LED Name	When the LED is...			
	Off	Green	Amber	Red
Ready	Lamp is on (or no power)			
Source	Source absent	Valid source present		Source absent or not valid
Lamp	Lamp off	Lamp on	Lamp striking	Lamp failed
Remote IR	Not receiving IR signal now	Receiving IR signal		
Serial Data	No command received	Received any command		
Serial Cmd		Received command addressed to “this” unit		
Lamp Saver	Lamp Saver not active or lamp is off	Lamp Saver active Source present Lamp on	Active Lamp is cooling Source present Lamp will come on when cooled	Active Source absent Lamp off

Table 6-1. CineWall Status LED Indications (continued)

LED Name	When the LED is...			
	Off	Green	Amber	Red
Engine Status		Optical engine OK		Optical engine fault or commu-nication failure
Ballast Status	Lamp off	Lamp on		Ballast fault or communication failure
Fan-Lamp	Fan off	Fan is running	Fan failed recently but is now running	Fan failed
Fan-DMD				
Fan-System				

Isolating Faulty Parts ➤

If you suspect that a part may be faulty, replace it with a known-good one if available. This is a very effective way to find a problem. If the problem goes away, the original part was at fault.

If the problem persists, you haven't found the problem yet, but you have learned something: the original part was not the problem. Re-install it and try something else.

If the Lamp Won't Light: Check to make sure the lamp is actually ***not*** lit. If the lamp is lit, you can usually see light come through spaces between parts if you look carefully.

Many things can make the screen black, even though the lamp is lit:

- The Curtain may be on. If the curtain is black and it is on, the screen will be black.
- There is no source picture. With no valid picture coming in, the display will be black.
- There is something blocking the light to the screen. Is the lens cap on?
- There are parts missing in the optical path. If someone was working on the display, maybe he or she forgot to put something back in.

If the lamp is not lit:

- The CineWall may not be receiving AC power. Check the main AC switch on the display. It should be lit.
- The lamp ballast may not be receiving power. Some displays have a green LED near the main AC switch that lights when the 380-volt part of the power supply is working. It should be lit. Other displays may have an LED on the electronics module to show when this high voltage power is available.

WARNING *Always turn off the AC power and remove the power cord before working inside the display and before removing a lamp.*

- If the lamp is OK, try swapping the ballast in the same way. The lamp ballast provides power to the lamp. It is an electronic part, and all electronic parts are eventually subject to failure.

- A fan may have failed. Most fans are sensed. That means the electronics module knows whether they are running or not. If they don't run when they should, the electronics module turns off the lamp and prevents it from striking (turning on) again.

Swapping other parts: You can swap electronics modules or fans in the same way to see if one is bad.

Note *When you swap fans, always exchange fans of the same size.*

Why not use a new part out of the box? It may seem like a good idea to take a new part out of the box and substitute it for a suspected part in the display. However, there is a small chance that the part in the box doesn't work. If you test a part by putting in a known good part, you get better information.

Notes:

7. Serial Communications

7.1 RS-232 Connection and Port Configuration

To interface the CineWall with an automation/control system or a PC running terminal emulation software, connect it to the **Display Control** output of the DHD Controller as shown in Figure 4-3 and Figure 4-4. Connect your control system or PC to the RS-232 input of the DHD Controller as shown in Figure 4-10.

Configure the RS-232 controller or PC serial port as follows: no parity, eight (8) data bits, one (1) stop bit and no flow control. Set the baud rate to 19200, to match that of the DHD Controller RS-232 port.

7.2 Serial Command Syntax

Serial commands to the DHD Controller take the following form:

- Commands are not case-sensitive.
- For a single command that takes no parameters, type the command followed by a carriage return; for example, to set the aspect ratio to Letterbox, type `LETTERBOX` **<Enter>**.
- For a single command that takes a parameter, type the command, a space or a comma and the desired value followed by a carriage return; for example, to set the brightness to -10, type `BRIGHTNESS -10` **<Enter>** or `BRIGHTNESS,-10` **<Enter>**.
- You can also send a string of multiple commands on a single line, separated by commas. For example, `COMPOSITE,BRIGHTNESS 50,16:9`**<Enter>** switches to the Composite video input, sets the brightness to 50 and sets the aspect ratio to 16:9. Command strings can be up to 255 characters long.

Note

Avoid combining the `ON` *or* `POWER 1` *commands with other commands on a single line. After sending* `ON` *or* `POWER 1,` *allow at least five (5) seconds for the DHD Controller to power up. If you have enabled the ISF splash screen (refer to* ***Splash Configure*** *on page 67), allow 15 seconds for the DHD Controller to power up.*

Once it does, it will accept and properly execute multiple serial commands.

Table 7-1 lists the RS-232 command set. The “Parameter (min/max)” column shows the valid parameter ranges, or “NA” for commands that take no parameters.

When you enter a valid command, the DHD Controller executes it and acknowledges it with a plus sign on the command line (+ >). When you enter an invalid command – one that is misspelled or followed by values outside the valid range for that command – the DHD Controller ignores it and returns a minus sign (- >).

Table 7-1. Serial Commands

Command	Parameter (min/max)	Value Stored?	Description
Power On/Off Commands			
OFF	NA	NA	Turns display off
ON	NA	NA	Turns display on
POWER	0/1	NA	Turns display on and off
POWER?	NA	NA	Returns power status
Input Selection Commands			
COMPONENT	NA	YES	Selects the Component input
COMPOSITE	NA	YES	Selects the Composite video input
HDMI1	NA	YES	Selects the HDMI 1 input
HDMI2	NA	YES	Selects the HDMI 2 input
HD1	NA	YES	Selects the RGB HD 1 input
HD2	NA	YES	Selects the RGB HD 2 input
INPUT?	NA	NA	Returns active input
SCART	NA	YES	Selects the SCART input
SVIDEO1	NA	YES	Selects the S-Video 1 input
SVIDEO2	NA	YES	Selects the S-Video 2 input

Table 7-1. Serial Commands (continued)

Command	Parameter (min/max)	Value Stored?	Description
Aspect Ratio Commands			
16:9	NA	YES	Selects the 16:9 aspect ratio
4:3	NA	YES	Selects the 4:3 aspect ratio
ASPECT?	NA	NA	Returns current aspect ratio
CINEMA	NA	YES	Selects the Cinema aspect ratio
LETTERBOX	NA	YES	Selects the Letterbox aspect ratio
NATIVE	NA	YES	Selects the Native aspect ratio
VIRTUALWIDE	NA	YES	Selects the VirtualWide aspect ratio
VIRTUALCINEMA	NA	YES	Selects the Virtual Cinema aspect ratio
Picture Adjust Commands			
BRIGHTNESS	-50/50	YES	Sets a value for brightness
BRIGHTNESS?	NA	NA	Returns brightness setting value
CHROMADELAY	-7/7	YES	Sets a value for input color chroma delay
CHROMADELAY?	NA	NA	Returns input color chroma delay setting
COLOR	-50/50	YES	Sets a value for color
COLOR?	NA	NA	Returns color setting value
CONTRAST	-50/50	YES	Sets a value for contrast
CONTRAST?	NA	NA	Returns contrast setting value
FILMMODE	0/1	YES	Sets Film Mode off (0) or on (1)
FILMMODE?	NA	NA	Returns Film Mode setting (0 = off; 1 = on)
FILTER	0/10	YES	Sets a value for input color noise filter
FILTER?	NA	NA	Returns input color noise filter setting
PHASE	0/31	YES	Adjusts phase
PHASE?	NA	NA	Returns phase setting value
SHARPNESS	-50/50	YES	Sets a value for sharpness
SHARPNESS?	NA	NA	Returns sharpness setting value
TINT	-50/50	YES	Sets a value for tint
TINT?	NA	NA	Returns tint setting value

Table 7-1. Serial Commands (continued)

Command	Parameter (min/max)	Value Stored?	Description
Image Preset Commands			
CUSTOM1	NA	YES	Loads “Custom 1” image preset
CUSTOM2	NA	YES	Loads “Custom 2” image preset
DAY	NA	YES	Loads “ISF Day” image preset
NIGHT	NA	YES	Loads “ISF Night” image preset
PRESET?	NA	NA	Returns currently-selected preset (ISF Day, ISF Night, Custom 1 or Custom 2)
Input Position Commands			
IHEIGHT	0/20	YES	Sets the value for input height
IHEIGHT?	NA	NA	Returns input height value
IHPOS	-50/50	YES	Sets a value for horizontal input position
IHPOS?	NA	NA	Returns input horizontal position value
IVPOS	-50/50	YES	Sets a value for vertical input position
IVPOS?	NA	NA	Returns input vertical position value
IWIDTH	0/50	YES	Sets the value for input width
IWIDTH?	NA	NA	Returns input horizontal width value
OVERSCAN	0/20	YES	Sets the overscan percentage
OVERSCAN?	NA	NA	Returns overscan percentage
OVERSCANMODE	0/1	YES	Sets the overscan mode (0=zoom; 1=crop)
OVERSCANMODE?	NA	NA	Returns the overscan mode (0=zoom; 1=crop)
Output Shift Commands			
OHEIGHT	-50/50	YES	Sets the value for output height
OHEIGHT?	NA	NA	Returns output height value
OHPOS	-50/50	YES	Sets the value for output horizontal position
OHPOS?	NA	NA	Returns output horizontal position value
OVPOS	-50/50	YES	Sets the value for output vertical position
OVPOS?	NA	NA	Returns output vertical position value
OWIDTH	-50/50	YES	Sets the value for output width
OWIDTH?	NA	NA	Returns output horizontal width value

Table 7-1. Serial Commands (continued)

Command	Parameter (min/max)	Value Stored?	Description
Miscellaneous Commands			
DISPLAY?	NA	NA	Returns display device input source value, as follows: 1 = Auto 36 = CW-95DHD
INRES?	NA	NA	Returns input resolution
SERNUM?	NA	NA	Returns DHD Controller serial number
SWVER?	NA	NA	Returns software version number
TRIGGER	1/3	YES	Assigns trigger to currently-selected aspect ratio
The following serial commands are meant to emulate buttons on the remote control or DHD Controller front panel. Each button has its own serial command, so effectively it is as if you were using the IR remote only you'll be doing so via serial commands. These commands provide active OSD responses just like the IR remote.			
DOWN	NA	NA	Down-Arrow (▼) key
ENTER	NA	NA	**ENTER** key
EXIT	NA	NA	**EXIT (RETURN)** key
LEFT	NA	NA	Left-Arrow (◀) key
MENU	NA	NA	**MENU**
RIGHT	NA	NA	Right-Arrow (▶) key
UP	NA	NA	Up-Arrow (▲) key

Notes:

8. Specifications

8.1 CineWall Specifications

Table 8-1 lists the CineWall specifications.

Table 8-1. CineWall Specifications

Native Resolution:	1920 x 817 (2.35:1)
Aspect Ratios:	Refer to Table 8-2
Video Standards:	NTSC, PAL, ATSC
Video Compatibility:	480i, 480p, 576i, 576p, 720p, 1080i, 1080p
Picture Size (16:9 Screen):	95 inches (2413 mm), diagonal
Lamp:	156/180W P-VIP UHP type, with 3AC Lamp Driver
Estimated Lamp Life:	6000 hours, median
Inputs (from DHD Controller):	(1) Digital Video (HDMI) with HDCP (1) RS-232 (8-pin, RJ-45 female)
Control Options:	- Discrete IR remote - Serial commands via RS-232
Power Requirements:	100 to 240 VAC (auto-sensing), 47 to 63 Hz 290 Watts (989.8 BTUs/hour)
Operating Environment:	41°F to 95°F (5°C to 35°C), 20% to 80% humidity (non-condensing)
Dimensions:	See Figure 8-1
Weight (approximate):	**Chassis and Mounting Hardware:** 165 lbs. (74.84 kg) **Screen:** 95 lbs. (43.09 kg) **Shipping Container and Packaging:** 255 lbs. (115.67 kg)
Regulatory Approvals:	Complies with FCC Class B, CE, C-Tick, cTUV-US
Specifications are subject to change without notice.	

8.2 DHD Controller Specifications

Table 8-2 lists the DHD Controller specifications.

Table 8-2. DHD Controller Specifications

Aspect Ratios:	4:3, Letterbox, 16:9, VirtualWide, Cinema, Virtual Cinema, Native
Video Standards:	NTSC, PAL, SECAM
Inputs:	(1) Composite (2) S-Video (1) Component/RGBHV/SCART (5 x RCA) (2) Component/RGBHV (5 x BNC) (2) HDMI 1.3 with HDCP (1) Serial Control (RS-232, 9-pin D-sub)
Outputs:	(1) HDMI 1.3 with HDCP (1) Display Control (RS-232, RJ-11)
Control Options:	- Discrete infrared remote - Serial commands via RS-232 - Front-panel controls
RS-232 Communication Parameters:	19200 bps, no parity, 8 data bits, 1 stop bit, no flow control
Trigger Outputs:	(3) +12 VDC, each rated at 250 mA and thermal fuse-protected
Bandwidth:	150 Mega Samples per Second (MSPS)
Power Requirements:	100 to 240 VAC (auto-sensing), 50/60 Hz, 160 Watts
Operating Environment:	41°F to 95°F (5°C to 35°C), 0% to 90% humidity (non-condensing)
Dimensions:	Width = 17.50 inches (444.5 mm) Depth = 11.19 inches (284.1 mm) Height = 3.75 inches (95.3 mm)
Weight:	13.0 lbs. (5.90 kg)
Regulatory Approvals:	Complies with FCC, CE C-Tick
Limited Warranty:	Two (2) years parts and labor from the date of delivery to the end user.
Specifications are subject to change without notice.	

8.3 Dimensions

Figure 8-1 shows the CineWall CW-95DHD dimensions (all dimensions are in inches).

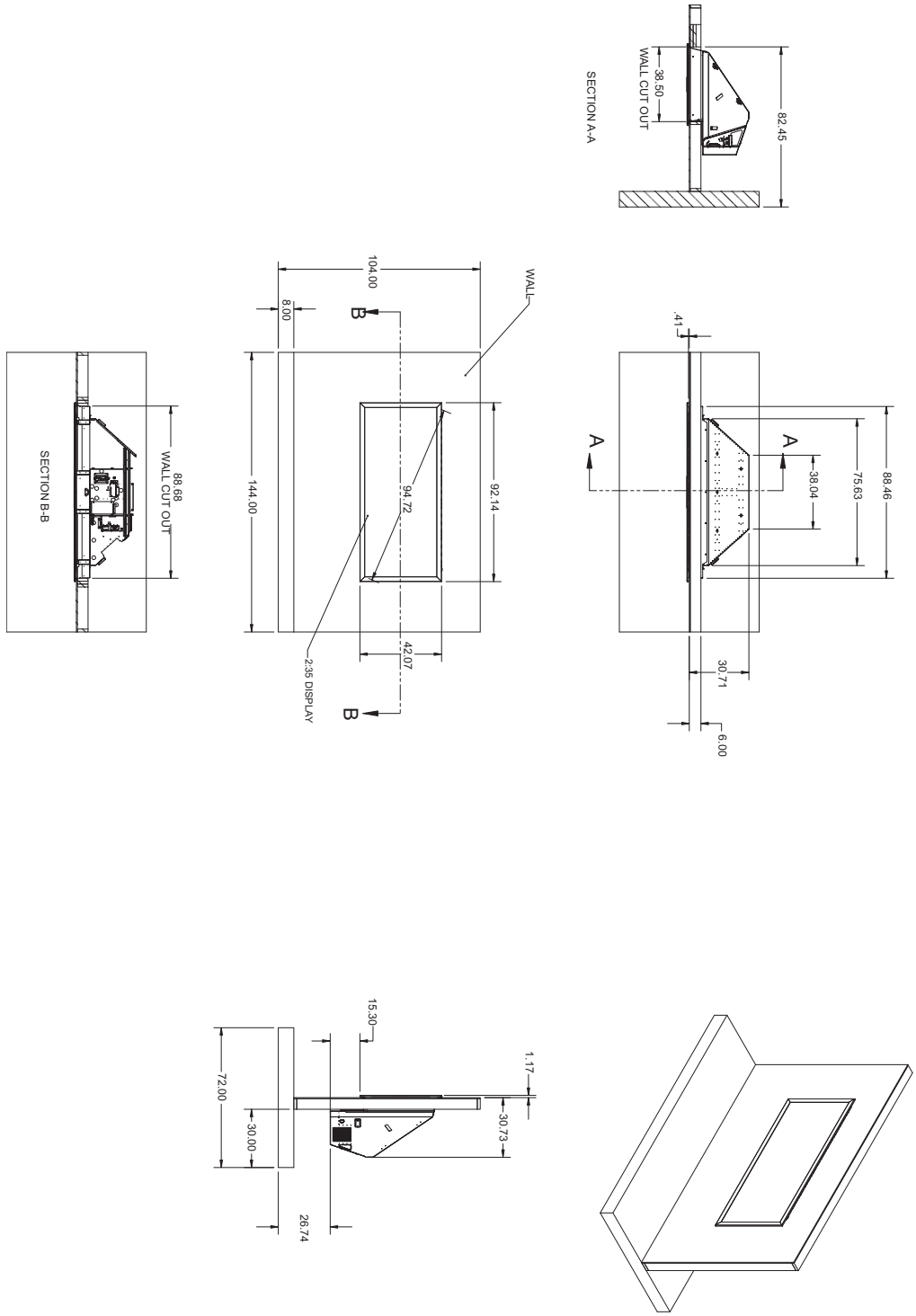

Figure 8-1. CineWall CW-95HD Dimensions

8.4 Supported Timings

Table 8-3 lists the signal types supported by each input on the DHD Controller.

Table 8-3. Supported Signal Timings by Input

Format	Resolution	Refresh Rate (Hz)	Horizontal Frequency (kHz)	Pixel Frequency (MHz)	Supported? (√ = Yes, – = No)					
					HD1 HD2	HDMI 1 HDMI 2	Component/ RGBHV	SCART	S-Video 1 S-Video 2	Video
640x480	640x480	60.00	31.469	25.175	√	√	√	–	–	–
		66.59	35.892	29.862	√	√	√	–	–	–
		72.00	37.861	31.500	√	√	√	–	–	–
		75.00	37.500	31.500	√	√	√	–	–	–
		85.00	43.269	36.000	√	√	√	–	–	–
800x600	800x600	60.00	37.879	40.000	√	√	√	–	–	–
		72.00	48.077	50.000	√	√	√	–	–	–
		75.00	46.875	49.500	√	√	√	–	–	–
		85.00	53.674	56.250	√	√	√	–	–	–
832x624	832x624	74.54	52.849	60.036	√	√	√	–	–	–
848x480	848x480	47.95	25.270	27.089	√	√	√	–	–	–
		60.00	31.020	33.750	√	√	√	–	–	–
1024x768	1024x768	60.00	48.363	65.000	√	√	√	–	–	–
		70.00	56.476	75.000	√	√	√	–	–	–
		75.00	60.023	78.750	√	√	√	–	–	–
		85.00	68.677	94.500	√	√	√	–	–	–
1152x864	1152x864	75.00	67.500	108.000	√	√	√	–	–	–
1280x720	1280x720	47.95	37.833	64.769	√	√	√	–	–	–
1280x768	1280x768	60.00	47.396	68.250	√	√	√	–	–	–
		60.00	47.776	79.500	√	√	√	–	–	–
		75.00	60.289	102.250	√	√	√	–	–	–
		85.00	68.633	117.500	√	√	√	–	–	–
1280x960	1280x960	60.00	60.000	108.000	√	√	√	–	–	–
		85.00	85.938	148.500	√	√	√	–	–	–

Table 8-3. Supported Signal Timings by Input (continued)

Format	Resolution	Refresh Rate (Hz)	Horizontal Frequency (kHz)	Pixel Frequency (MHz)	Supported? (√ = Yes, – = No)					
					HD1 HD2	HDMI 1 HDMI 2	Component/ RGBHV	SCART	S-Video 1 S-Video 2	Video
1280x1024	1280x1024	60.00	63.981	108.000	√	√	√	–	–	–
		75.00	79.976	135.000	√	√	√	–	–	–
		85.00	91.146	157.500	√	√	√	–	–	–
1360x768	1360x768	60.00	47.712	85.500	√	√	√	–	–	–
1400x1050	1400x1050	60.00	64.744	101.000	√	√	√	–	–	–
		60.00	65.317	121.750	√	√	√	–	–	–
		75.00	82.278	156.000	√	√	√	–	–	–
1600x1200	1600x1200	60.00	75.000	162.000	√	√	√	–	–	–
1680x1050	1680x1050	60.00	64.674	119.000	√	√	√	–	–	–
1920x1080	1920x1080	47.95	56.821	150.007	√	√	√	–	–	–
1920x1200	1920x1200	60.00	74.038	154.000	√	√	√	–	–	–
SCART RGBS	–	50.00	–	–	–	–	–	√	–	–
480/60i	720x487	59.94	15.734	13.500	√	√	√	–	–	–
480/60p	720x483	59.94	31.469	27.000	√	√	√	–	–	–
576/50i	720x576	50.00	15.625	14.750	√	√	√	–	–	–
576/50p	720x576	50.00	31.250	29.000	√	√	√	–	–	–
720/24p	1280x720	23.98/24.00	17.982/18.000	59.341/59.400	√	√	√	–	–	–
720/25p	1280x720	25.00	18.750	74.250	√	√	√	–	–	–
720/30p	1280x720	29.97/30.00	22.478/22.500	74.175/74.250	√	√	√	–	–	–
720/50p	1280x720	50.00	37.500	75.250	√	√	√	–	–	–
720/60p	1280x720	60.00	45.000	74.250	√	√	√	–	–	–
1080/50i	1920x1080	50.00	28.125/31.250	74.250/72.000	√	√	√	–	–	–
1080/60i	1920x1080	59.94/60.00	33.716/33.750	74.175/74.250	√	√	√	–	–	–
1080/24p	1920x1080	23.98/24.00	26.978/27.000	74.175/74.250	√	√	√	–	–	–
1080/50p	1920x1080	50.00	56.250	148.500	√	√	√	–	–	–
1080/60p	1920x1080	59.94/60.00	67.433/67.500	148.350/148.500	√	√	√	–	–	–
NTSC 3.58	–	59.94/60.00	15.734/15.750	3.580	–	–	–	–	√	√
NTSC 4.43	–	59.94/60.00	15.734/15.750	4.430	–	–	–	–	√	√
PAL-B/G/H/I	–	50.00	15.625	4.430	–	–	–	–	√	√

Table 8-3. Supported Signal Timings by Input (continued)

Format	Resolution	Refresh Rate (Hz)	Horizontal Frequency (kHz)	Pixel Frequency (MHz)	Supported? (√ = Yes, – = No)					
					HD1 HD2	HDMI 1 HDMI 2	Component/ RGBHV	SCART	S-Video 1 S-Video 2	Video
PAL-M	–	59.94/60.00	15.734/15.750	3.580	–	–	–	–	√	√
PAL-N	–	50.00	15.625	3.580	–	–	–	–	√	√
SECAM	–	50.00	15.625	13.500	–	–	–	–	√	√

SERIAL NUMBER

020-0981-00 Rev. A
March 2009