myprojectorlamps.com

**The most trusted, dependable name in projector lamp sales.**

http://www.myprojectorlamps.com

http://www.myprojectorlamps.ca

http://www.myprojectorlamps.eu

The following projector manual has not been modified or altered in any way.

Introduction

# Your Proxima Lightbook Projector

The Proxima® Lightbook™ projector makes sharing data and presenting information as easy as connecting your computer to your monitor.

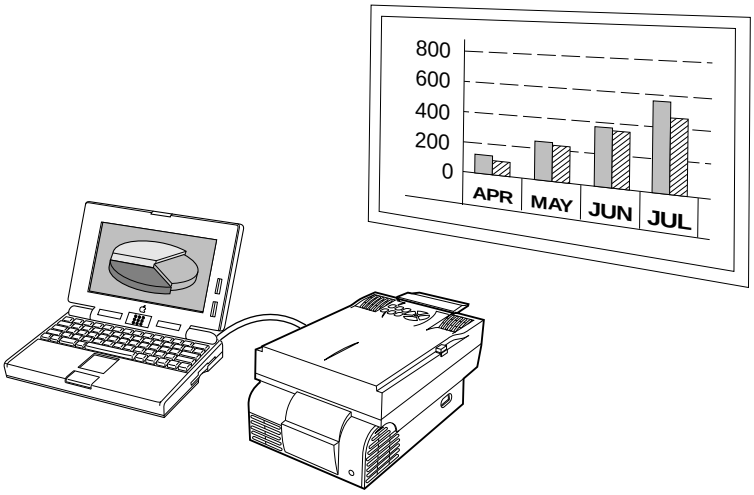


**Figure i-1** The Proxima Lightbook projector in use

This manual covers the Proxima Lightbook family of light, portable projectors which provide images of unrivaled clarity and color accuracy.

## WHAT'S IN THE BOX?

After you've opened the box and removed the projector and accessory packs, make sure you have all of the items shown in Figure i-2.

***CAUTION!*** *The Proxima Lightbook projector should be treated like any other precision optical instrument. Handle it carefully.*

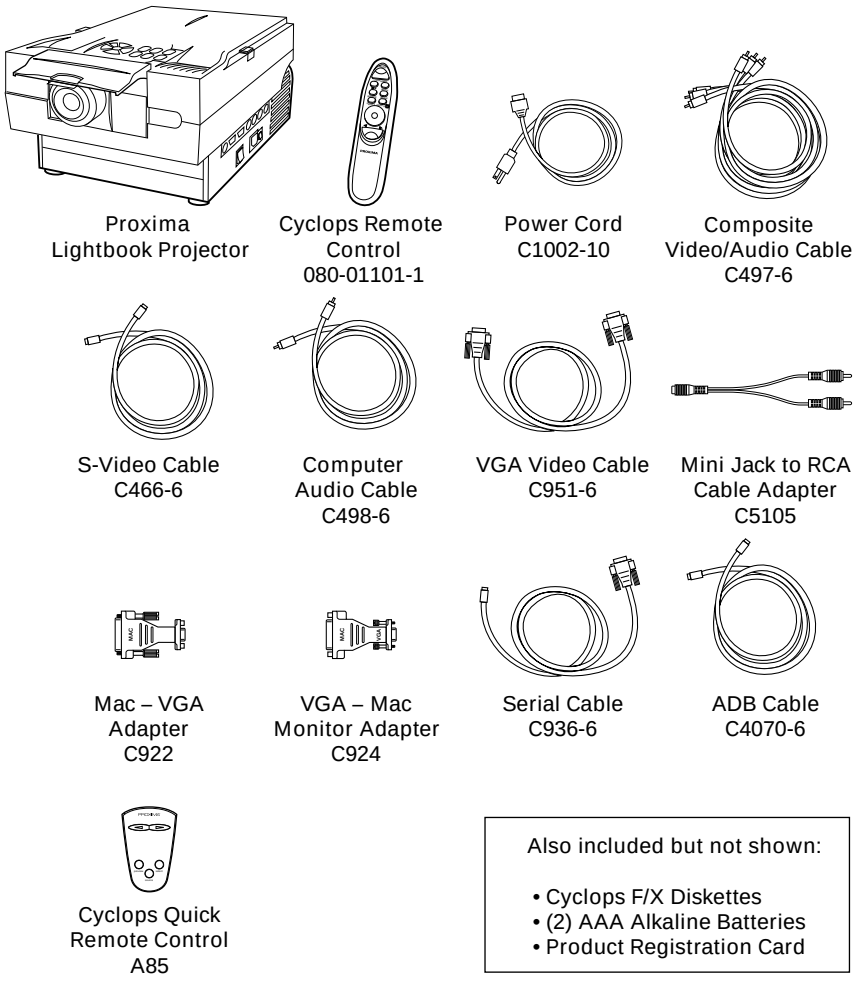


**Figure i-2** Items included with the projector

Your projector also includes power cords for Europe, the United Kingdom, and Italy.

## OPENING THE PROJECTOR

**1** Press the gold buttons on both sides of the projector and pull the top assembly up. It will click into place.

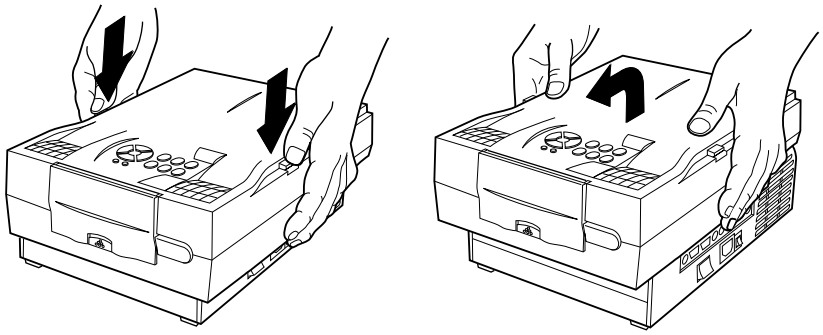

**Figure i-3** Opening the projector

***NOTE:*** *The ⊗ and ⓘ indicators will both flash if the projector is not completely open.*

**2** Lift the gold front door latch to pop the lens open.

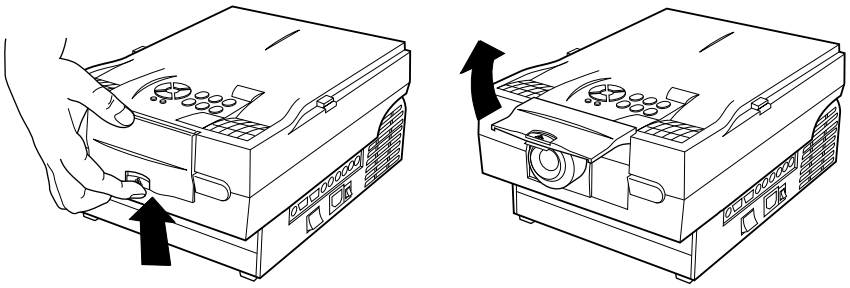

**Figure i-4** Opening the lens

## YOUR LIGHTBOOK PROJECTOR

Before you begin, locate the main parts of the Lightbook projector.

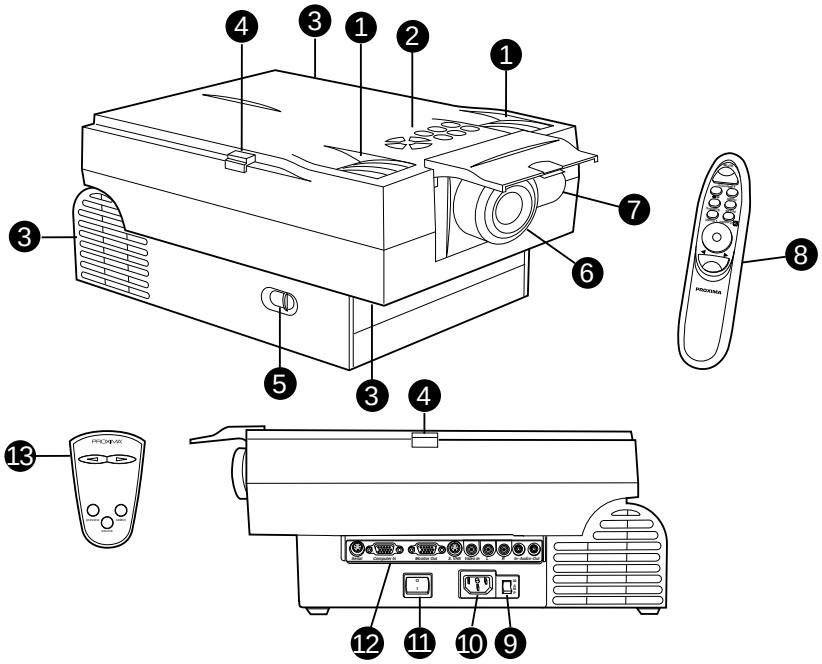


**Figure i-5** The Lightbook projector and Cyclops Remote Control

1 Internal Speakers
2 Control Panel
3 Cooling Fans
4 Release Button
5 Keystone Adjustment
6 Focus Ring
7 Remote Control IR Lens
8 Cyclops Remote Control
9 Circuit Breaker
10 Power Cord Receptacle
11 Main AC Power Switch
12 Connector Panel
13 Cyclops Quick Remote

## CONNECTOR PANEL

All connections between the projector and computer or video source are made on the side connector panel.

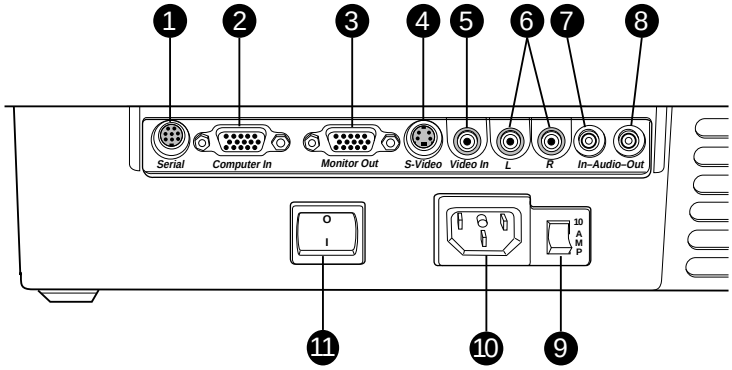


**Figure i-6** The Connector Panel

| | CONNECTOR | DESCRIPTION |
|---|---|---|
| **1** | SERIAL | Connects to your computer so you can use Cyclops F/X software. |
| **2** | COMPUTER IN | Connects computer video to the projector. |
| **3** | MONITOR OUT | Provides computer video output to a separate monitor. |
| **4** | S-VIDEO | Allows S-Video video input. |
| **5** | VIDEO IN | Allows video input from an NTSC, PAL, or SECAM source. |
| **6** | L-AUDIO-R | Allows stereo/mono audio input from an NTSC, PAL, or SECAM source. |
| **7** | AUDIO IN | Allows stereo/mono audio input. |
| **8** | AUDIO OUT | Provides audio output to an external stereo system. |
| **9** | AC CIRCUIT BREAKER | Restarts the system after a power failure. |
| **10** | AC PLUG | Connects AC power. |
| **11** | AC POWER | Turns the projector on or off. |

## CONTROL PANEL

Use the Lightbook projector's control panel keys to turn the projector on or off, adjust the projected image, and display and hide the menu. The and indicators provide status information about your projector.

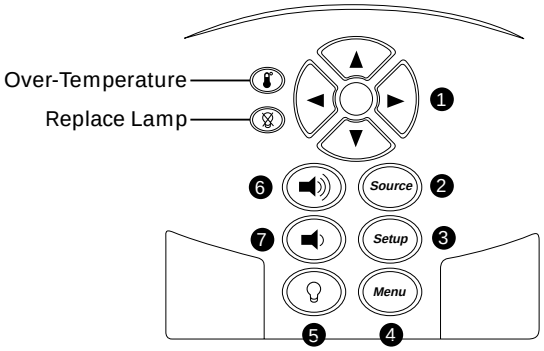


**Figure i-7** The Control Panel

| | KEY | FUNCTION |
|---|---|---|
| **1** | | Controls the menu and adjusts screen position. |
| **2** | Source | Switches the video inputs. |
| **3** | Setup | Activates the Setup menu. |
| **4** | Menu | Displays or hides the menu. |
| **5** | | Turns the lamp on or off. |
| **6** | | Adjusts the volume. |
| **7** | | |

| LIGHT | FUNCTION |
|---|---|
| | Glows red to warn of an over-temperature condition.<br>Flashes quickly if the projector is not fully opened. |
| | Flashes slowly if the spare lamp burns out.<br>Glows red when the active lamp burns out.<br>Flashes quickly if the projector is not fully opened. |

## QUICK START

Follow the appropriate section below for the type of system that you have. Be sure to observe the indicator lights when you power up the projector.

### Connecting a Notebook

***NOTE:*** *If you are connecting to an Apple PowerBook, attach the Mac - VGA cable adapter to the computer's Video Out port (or video adapter cable).*

1 Plug the COMPUTER end of the supplied VGA Video cable into the notebook's VGA Out port or into the Mac - VGA cable adapter (Macintosh only).

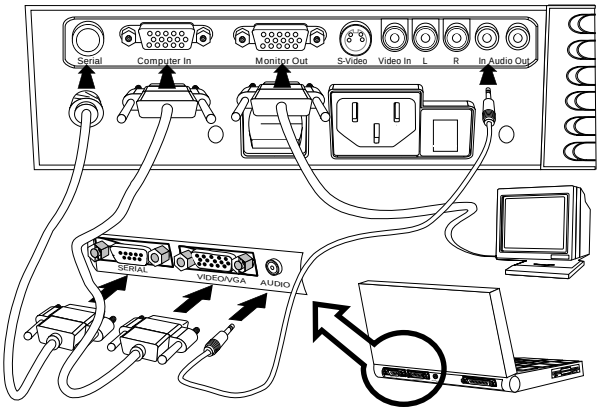


**Figure i-8** Connecting a notebook

2 Plug the end of the VGA Video cable with the large round collar into the COMPUTER IN port on the projector.

3 Connect your audio source to the AUDIO IN port on the projector.

4 Turn the projector on.

## Connecting Desktop PCs

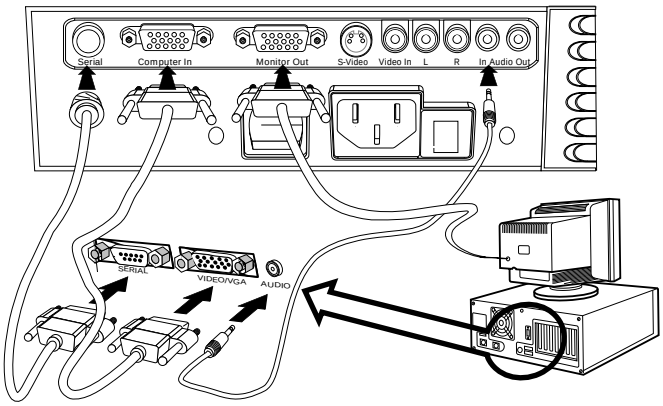


**Figure i-9** Connecting a Desktop PC

1. Turn the PC power off. Unplug the monitor cable from the computer.
2. Plug the end of the supplied VGA cable with the large round collar into the COMPUTER IN port on the projector. Plug the other end into the computer's Monitor Out port.
3. Connect your audio source to the AUDIO IN port on the projector.
4. You can project without using the PC monitor. If you want to also use the monitor, plug the monitor cable into the MONITOR OUT port on the projector.
5. Turn the projector on.
6. Turn the computer on.

## Connecting Macintosh Computers

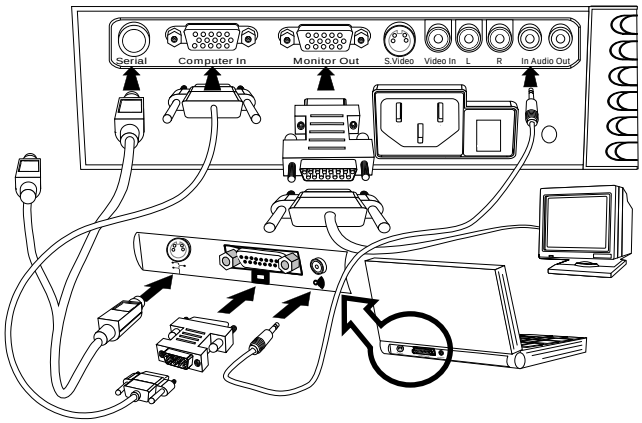


**Figure i-10** Connecting a Macintosh

1. Unplug the existing monitor cable from your computer.
2. Plug the end of the supplied VGA video cable with the large round collar into the COMPUTER IN port on the projector. Attach the VGA end of the Mac - VGA cable adapter to the other end of the VGA video cable.
3. Plug the Mac end of the Mac - VGA cable adapter into your computer's video port.
4. Connect your audio source to the AUDIO IN port on the projector.
5. To project and view the monitor at the same time, plug the monitor cable into the Mac end of the VGA - Mac monitor adapter.

***NOTE:*** *The Lightbook projector only supports Multi-sync monitors for Macintosh computers.*

6. Plug the VGA end of the VGA - Mac monitor adapter into the MONITOR OUT port on the projector.
7. Turn the projector on.

***NOTE:*** *If you turn the projector off while the computer is on, your external monitor will go blank. This is normal. Just turn the projector on again and the monitor display will return.*

## Connecting NTSC, PAL, SECAM, or S-Video

Use the supplied AV cable to connect an NTSC, PAL, or SECAM source to the projector. Use the supplied S-Video cable to connect an S-Video source.

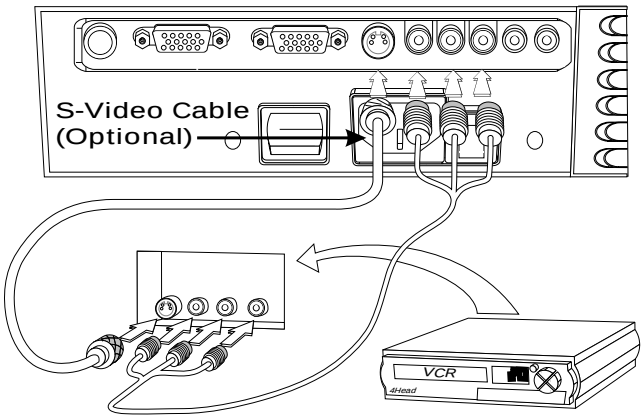


**Figure i-11** Connecting video

## Special Configurations

If your computer has an internal monitor but no external video capability (such as the Macintosh Performa 575, PowerMac 5200, and certain PowerBooks), you need a video adapter card to attach the Lightbook projector.

Setup for a third-party adapter is identical to the procedures outlined in the *Quick Start* section above. Contact your dealer, Proxima Customer Service, or a third-party supplier for more information about an appropriate video adapter.

## CLOSING THE PROJECTOR

**1** Close the lens door latch.

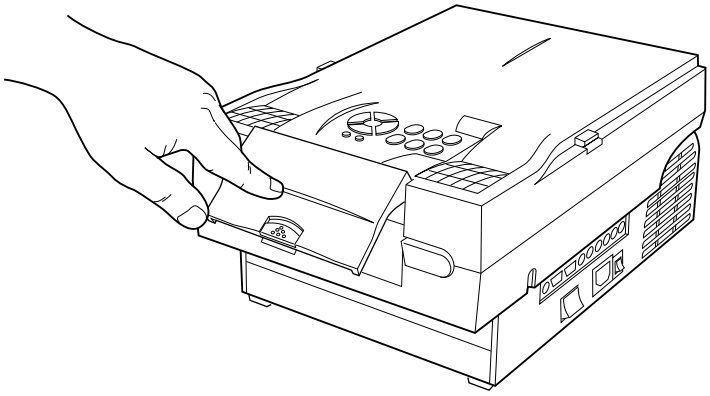

**Figure i-12** Closing the lens

**2** Press both gold buttons to release the top assembly

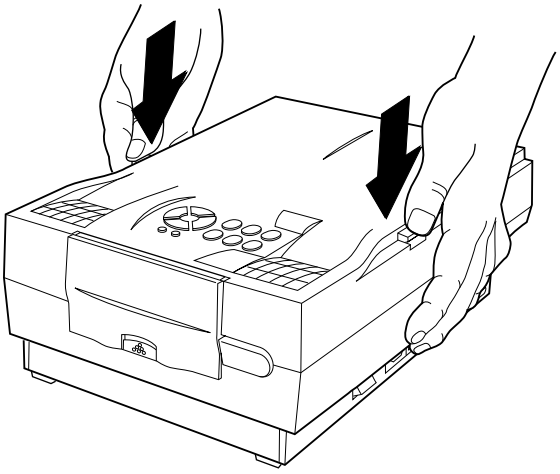

**Figure i-13** Releasing the projector top

**3** Gently press down and pull back on the assembly until it clicks into place.

Chapter 1

# Setting Up the Lightbook Projector

## POSITIONING THE PROJECTOR

Place the projector on a solid, flat surface at a right angle (perpendicular) to the projection screen and parallel to the floor. If you are using a media cart, make sure the wheels are locked to prevent it from moving.

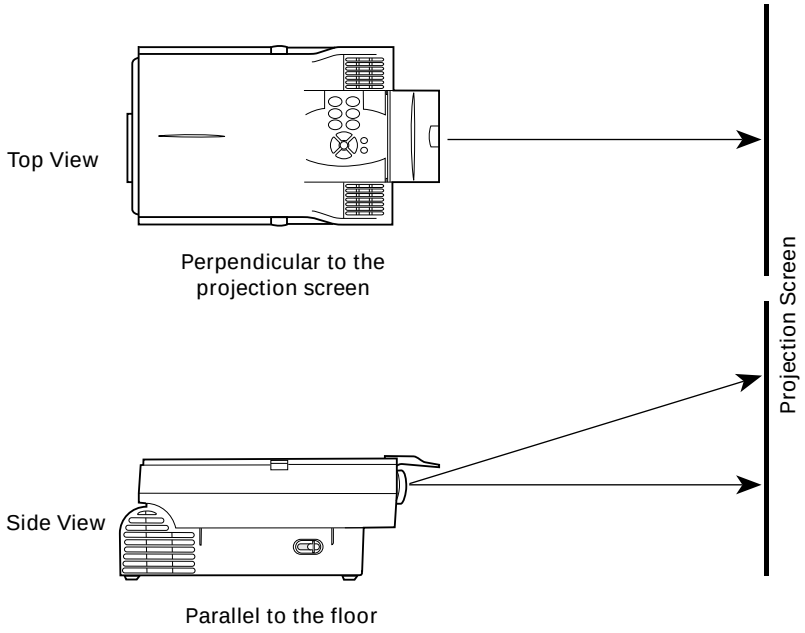


**Figure 1-1** Positioning the projector

## TRANSPORTING AND MOVING THE PROJECTOR

Always use the supplied carrying case to transport the projector. If you are moving the projector a short distance, grasp it securely at the sides by the lower parts of the housing to support the weight of the unit.

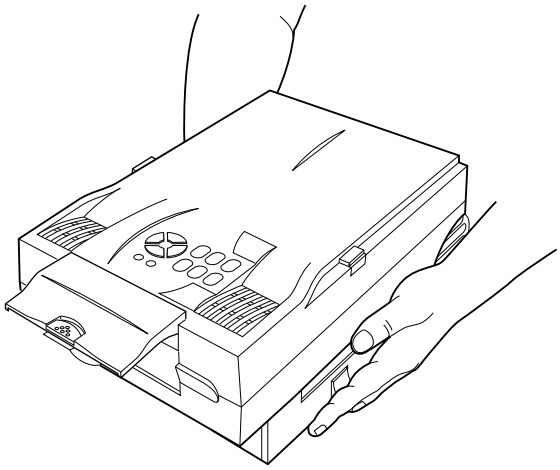

**Figure 1-2** Moving the projector

### Projector Cooling and Airflow

Locate the air intake grills under the front of the projector and in the left rear corner, and the air exhaust grill in the right rear corner.

***CAUTION!*** *Never operate the projector if these grills are clogged or obstructed, or if the electric fans are not running.*

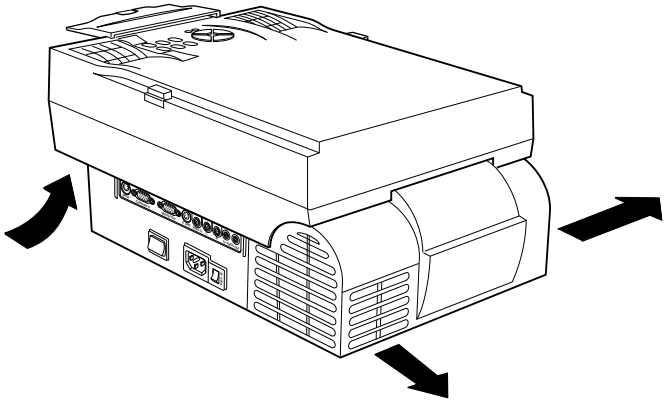

**Figure 1-3** Allow for proper air flow

## CONNECTOR PANEL

All connections between the projector and your computer or video source are made on the side connector panel.

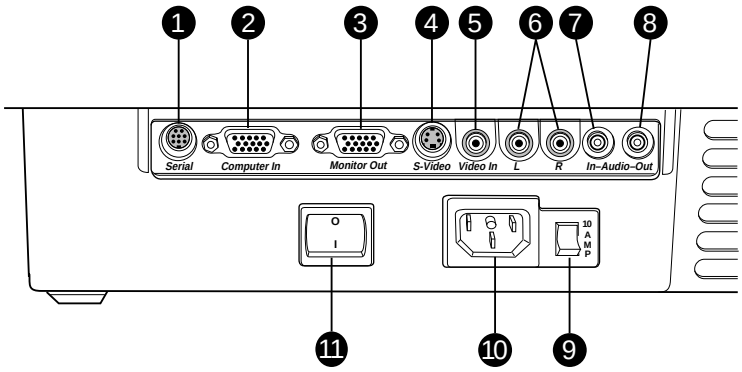


**Figure 1-4** The Connector Panel

| | CONNECTOR | DESCRIPTION |
|---|---|---|
| **1** | SERIAL | Connects to your computer so you can use Cyclops F/X software. Use a serial connector for a PC, ADB connector for a Macintosh. |
| **2** | COMPUTER IN | Connects computer video to the projector. |
| **3** | MONITOR OUT | Provides computer video output to a separate monitor. |
| **4** | S-VIDEO | Allows S-Video video input. |
| **5** | VIDEO IN | Allows video input from an NTSC, PAL, or SECAM source. |
| **6** | L-AUDIO-R | Allows stereo/mono audio input from an NTSC, PAL, or SECAM source. |
| **7** | AUDIO IN | Allows stereo/mono audio input. |
| **8** | AUDIO OUT | Provides audio output to an external stereo system. |
| **9** | AC CIRCUIT BREAKER | Restarts the system after a power failure. |
| **10** | AC PLUG | Connects AC power. |
| **11** | AC POWER | Turns the projector on or off. |

## CONNECTING POWER TO THE PROJECTOR

The power cord receptacle, AC POWER switch, and circuit breaker are located below the connector panel of the projector.

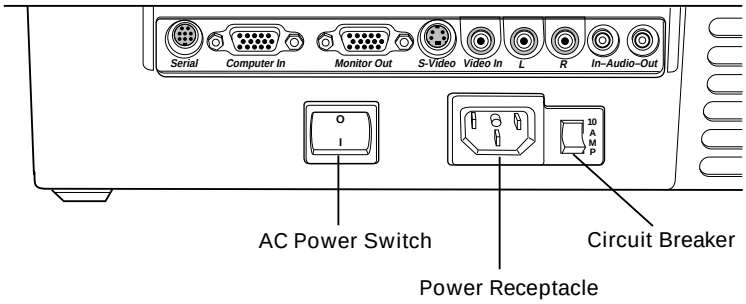


**Figure 1-5** Power receptacle, AC Power switch, and circuit breaker reset switch

1. Plug the appropriate power cord into the power receptacle on the side of the projector.
2. Connect the other end of the power cord to a properly-grounded wall outlet.

## CONNECTING YOUR COMPUTER

### Connecting Notebook Computers

Use the appropriate cable and adapter to connect your notebook computer to the projector.

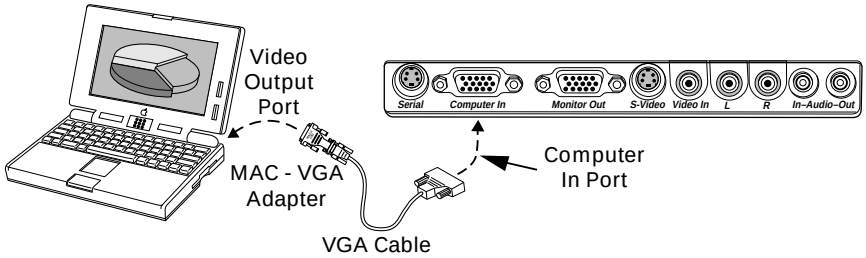


**Figure 1-6** Notebook connections

***NOTE:*** *If you are using an Apple PowerBook, attach the Mac - VGA cable adapter to the computer's Video Output port (or video adapter cable).*

1. Plug the end of the supplied VGA cable with the large round collar into the computer's VGA or Video Out port or into the Mac - VGA cable adapter (Macintosh only).
2. Plug the other end of the VGA cable into the COMPUTER IN port on the projector.
3. If you want audio, connect your audio source to the AUDIO IN port on the projector.
4. Turn the projector on.

***NOTE:*** *If your projector is unable to project an image at the same time your laptop monitor displays an image, refer to your laptop documentation for information on switching between the internal screen and the video port.*

## Connecting PCs

Use the included VGA video cable to connect your PC to the projector's COMPUTER IN port. If you want to use your monitor and Lightbook projector at the same time, use your existing monitor cable to connect the projector to the monitor.

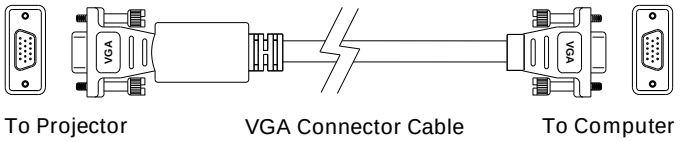


**Figure 1-7** VGA Video cable

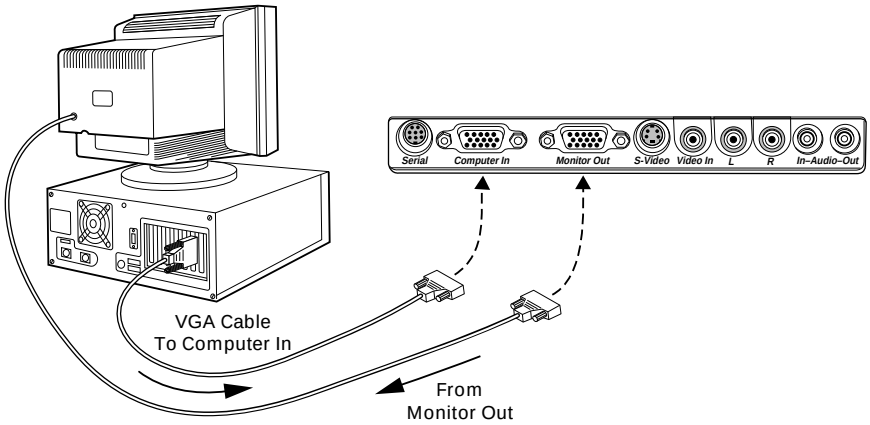


**Figure 1-8** Connecting a PC

1. Unplug the monitor cable from the computer.
2. Plug the end of the supplied VGA cable with the large round collar into the projector' COMPUTER IN port. Plug the other end of the VGA cable into the computer's Video Out (VGA) port.
3. If you want audio, connect your audio source to the AUDIO IN port on the projector.
4. If you want to use an external monitor, connect the monitor cable to the projector's MONITOR OUT port.
5. Turn the projector on.

***NOTE:*** *An external monitor is not required to use the Lightbook projector.*

## Connecting Macintosh Computers

Use the video adapters shown below to connect a Macintosh computer and monitor to the Lightbook projector.

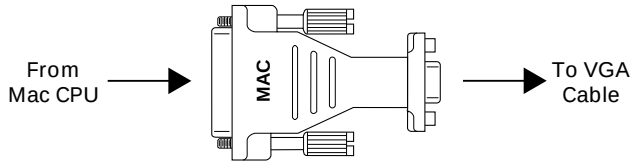


Mac – VGA Cable Adapter

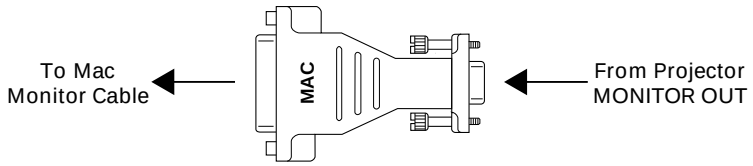


VGA– Mac Monitor Adapter

**Figure 1-9** The Macintosh adapters

Use the cable adapters and supplied VGA video cable to connect the projector to your Macintosh computer.

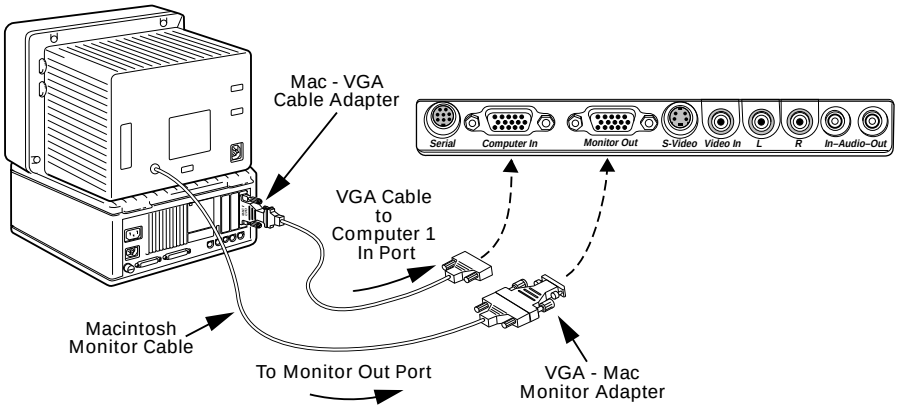


**Figure 1-10** Connecting a Macintosh

1. Unplug the Macintosh monitor cable from the computer.
2. Plug the end of the supplied VGA video cable with the large, round collar into the COMPUTER IN port on the projector. Attach the VGA end of the Mac - VGA cable adapter to the other end of the VGA video cable.
3. Plug the Mac end of the Mac - VGA cable adapter into the Macintosh video port.
4. Connect the audio source to the AUDIO IN port.

   Use the VGA - Mac monitor adapter and your existing monitor cable to connect the projector to a separate computer monitor, so you can view computer video on the projector screen and the monitor at the same time.
5. To project and view the monitor at the same time, plug the monitor cable into the Mac end of the VGA - Mac monitor adapter.
6. Plug the VGA end of the Mac - VGA monitor adapter into the MONITOR OUT port on the projector.
7. Turn the projector on.

***NOTE:*** *An external monitor is not required to use the Lightbook projector.*

## Special Configurations

If your computer has an internal monitor but no external video capability (Macintosh Performa 575, PowerMac 5200, and certain PowerBooks), you need a video adapter card in order to attach the projector.

Setup for a third-party adapter is identical to the procedures outlined in the *Quick Start* section in the introduction chapter. Contact your dealer, Proxima Customer Service, or a third-party supplier for more information about an appropriate video adapter.

## CONNECTING COMPUTER AUDIO

Use the composite audio cable to connect your audio source to the AUDIO IN port on the projector.

**Figure 1-11** Audio In port

1. Insert one end of the computer audio cable into the Audio Out port of a Macintosh or the sound card of a PC.
2. Insert the other end into the projector's AUDIO IN port.

***NOTE:*** *Although both AUDIO and AUDIO IN may be connected at the same time, only one can be active. If computer video is selected, AUDIO IN is active. If NTSC, PAL, SECAM, or S-Video is being viewed, AUDIO is active.*

## CONNECTING COMPOSITE VIDEO

You can display composite video (NTSC, PAL or SECAM) on the projector.

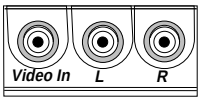


**Figure 1-12** Video In port

Use the supplied composite Video/Audio cable (see page i-2) to connect an NTSC, PAL, or SECAM source to your projector.

1. Find the RCA connector on your video source marked Video Out or something similar. This connector is typically yellow. Insert one of the AV cable's yellow connectors into the Video Out jack of the video source.
2. Insert the other yellow connector into the projector's VIDEO IN port.

## CONNECTING AN S-VIDEO SOURCE

To connect an S-Video source, use the supplied S-Video cable (see page i-2) instead of an RCA cable connection for the video source. The S-Video cable has identical, round, 4-pin mini-DIN connectors on both ends.

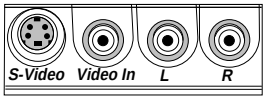


**Figure 1-13** The S-Video port

To connect an S-Video source:

1. Insert one end of the S-Video cable into the mini-DIN Video Out port on the video source.
2. Insert the other end of the S-Video cable into the projector's S-Video port.

***NOTE:*** *The S-Video cable does not carry an audio signal. Use the red and white connectors on the AV cable (see Connecting L-Audio-R Ports below) to connect Audio Out from your video source to the L-AUDIO-R ports on the projector.*

## CONNECTING AUDIO FROM A COMPOSITE VIDEO SOURCE

Use the supplied AV cable to connect stereo or monaural audio inputs from an NTSC, PAL, SECAM or S-Video source.

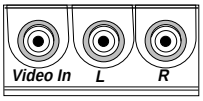


**Figure 1-14** L-Audio-R ports

1. Insert one of the white connectors on the AV cable into the left Audio Out port of your video source. Insert the white connector on the other end into the L-AUDIO port on the projector.
2. Insert one of the red connectors on the AV cable into the right Audio Out port of your video source. Insert the red connector on the other end into the R-AUDIO port on the projector.

***NOTE:*** *Although both L-AUDIO-R and AUDIO IN may be connected at the same time, only one can be active. If computer video is selected, AUDIO IN is active. If NTSC/PAL/SECAM/S-Video is being viewed, the L-AUDIO-R ports are active.*

If your TV audio source outputs only monaural audio, your projector will provide simulated stereo audio. Connect the audio source to the left AUDIO port and set the stereo mode to mono using the Audio menu.

## PROJECTOR AUDIO OUT

Your projector contains an internal stereo system consisting of an amplifier and two speakers. Although this system provides high-quality stereo output, a multimedia presentation may require independently powered speakers or an external sound system.

***NOTE:*** *The projector's internal speakers can be turned on or off using the Audio menu (see page 2-21).*

**Figure 1-15** The Audio Out port

To connect your projector to an external stereo system or powered speakers:

1. Insert one end of the Computer Audio cable into the projector's AUDIO OUT port.
2. Insert the other end into the external amplifier or powered speaker system's Audio In port.
3. If you are using two powered speakers, connect speaker A to speaker B using the cables supplied with the powered speaker system.

***NOTE:*** *A mini-jack to RCA adapter is provided (see page i-2) in case your external speaker system has RCA input plugs.*

## CONNECTING TO THE SERIAL/ADB PORT

Use the SERIAL port to connect the projector and the computer in order to use the optional Cyclops F/X software.

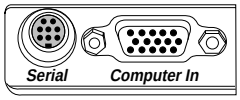


**Figure 1-16** The Serial port

1. Connect one end of the serial cable to the projector's SERIAL port.
2. Connect the other end of the cable to the computer:
   - On a PC, connect the computer end to a serial port.
   - On a Macintosh, connect the computer end to an ADB connector.

Chapter 2

# Using the Lightbook Projector

## OPENING THE PROJECTOR

**1** Press both gold buttons on the projector's sides.

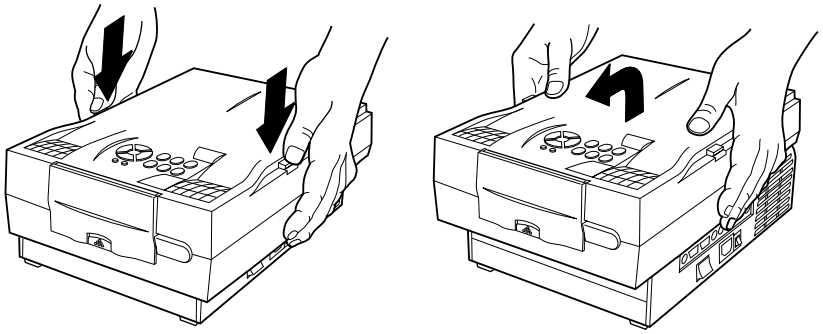

**Figure 2-1** Opening the projector

**2** Pull the top assembly up and forward. It will click into place.

***NOTE:*** *The and indicators will both flash if the projector is not completely open.*

**3** Lift the gold lens door latch. The lens door will pop open and the lens will extend.

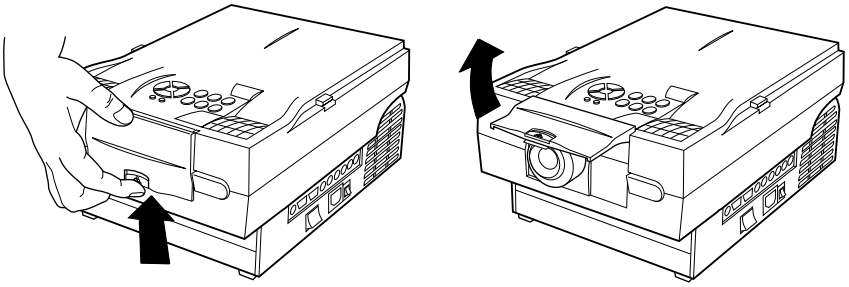

**Figure 2-2** Opening the lens

## TURNING ON THE PROJECTOR

**1** Move the AC POWER switch to the ON position. The keypad lights up and the lamp turns on. The projector will beep once.

***NOTE:*** *Make sure to turn the projector on before you power up the computer. This allows the computer to sense the projector during its startup sequence.*

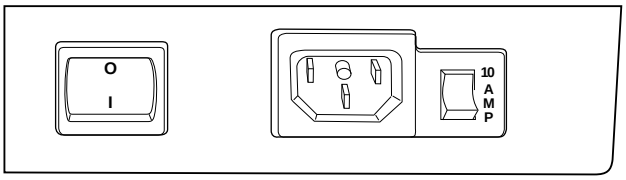


**Figure 2-3** Projector power switch

**2** Next, turn on your computer. If you turn the projector off while the rest of your computer system is running, your external monitor will go blank. This is normal. Just turn the projector on again and your monitor display will return.

***CAUTION!*** *Never operate the projector if the air intake or exhaust grills are clogged or obstructed, or if the electric fan is not running.*

## FOCUSING THE IMAGE

You can use the title screen that appears when you start the projector to make your focus adjustments. Rotate the focus ring to the right or left for the clearest image.

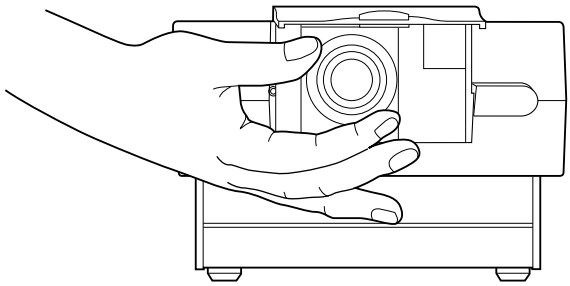

**Figure 2-4** The Lightbook projector lens focus ring

## CORRECTING A KEYSTONED IMAGE

The image may become distorted when you elevate the front of the projector.

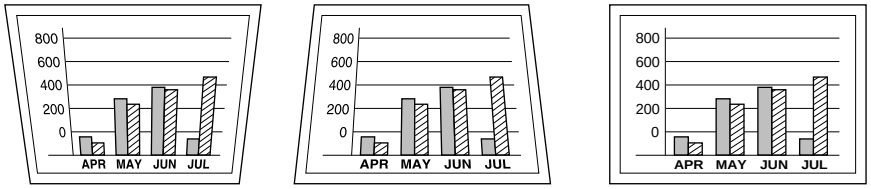


Keystoned Images

Correct Image

**Figure 2-5** Keystoned and square images

**1** Move the keystone correction lever forward or back to adjust the shape of the image.

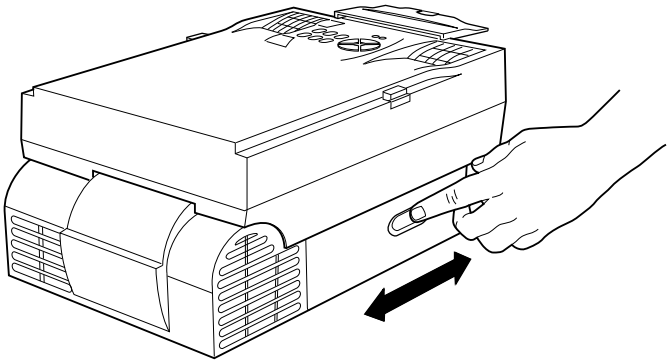

**Figure 2-6** Correcting the keystoned image

## TURNING OFF THE PROJECTOR

**1** Press the key to turn the lamp off.

**2** Let the projector cool until the fans turn off and then turn the AC POWER switch off.

***CAUTION!*** *Do not close the projector without allowing it to cool until the fans turn off.*

## CLOSING THE PROJECTOR

**1** Close the lens door latch.

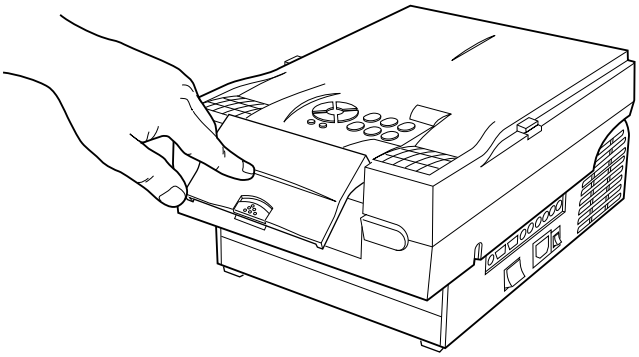

**Figure 2-7** Closing the lens

**2** Press both gold buttons to release the top assembly.

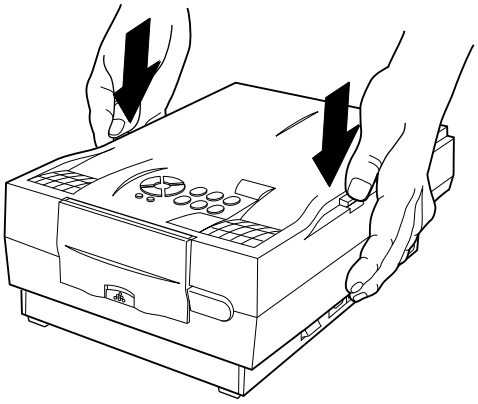

**Figure 2-8** Releasing the projector top

**3** Gently press down and pull back on the assembly until it clicks into place.

## CONTROL PANEL KEYS

Use the control panel keys to turn the lamp on or off, adjust the projected image, and to display and hide the menu.

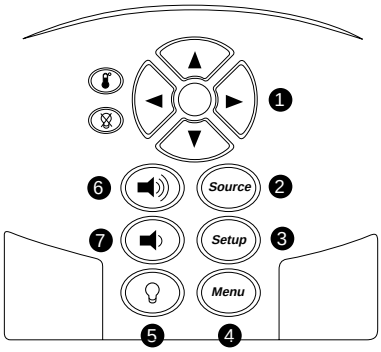


**Figure 2-9** Control Panel keys

| | KEY(S) | FUNCTION |
|---|---|---|
| 1 | | Controls the menu and adjusts screen position. |
| 2 | Source | Switches through the video inputs. |
| 3 | Setup | Activates the Setup menu. |
| 4 | Menu | Displays or hides the menu. |
| 5 | | Turns the lamp on or off. |
| 6 | | Adjusts the volume up or down. |
| 7 | | |

## Lamp

The key is used to turn the lamp on or off. Use this key when you want to present information without displaying the computer or video image, or to turn the lamp off to allow the projector to cool. When you turn the lamp on, the fans will run at a higher speed.

***NOTE:*** *If the lamp is off, you can still use the VOLUME and MUTE keys to adjust the audio.*

## Arrows

The keys allow you to:

- Make small adjustments in the position of the projected image. Press the arrow keys to shift the image in the direction indicated by the arrow, or
- Modify settings in the Menus.

## Menu

Press the key to display the menus in the upper portion of the projected image. Press the key again to turn off the menus. Menu settings are automatically stored when you exit the menus or turn off the projector.

## Source

The key allows you to switch between active connected sources.

## Volume

The volume keys display a slide bar to adjust the volume of the projector audio. Press the key to increase or the key to decrease the audio output levels. These keys control both internal and external audio levels.

## Setup

Press the Setup key to display a series of Setup menus. The projector will display the slide bars in sequence to help you adjust the image. For example, if you are connected to a computer source, the SETUP key will cycle through slide bar adjusters for Contrast, Sync, and Image Position.

***NOTE:*** *If no video source is present, the Help screen will appear when you press Setup.*

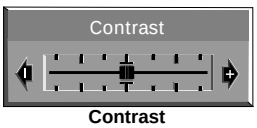


**Contrast**

**Figure 2-10** Sample Setup slide bar

Press ▶ or ◀ to adjust the selected item. Press Setup again to accept the new setting. The display disappears after five seconds if no actions are taken.

***NOTE:*** *The Setup options will be different for each type of input source.*

| SETTING | PURPOSE | AVAILABLE ON |
|---|---|---|
| **Sync** | Fine tune the clarity of the image. | Computer only |
| **Contrast** | Sharpen the image. | All sources |
| **Brightness** | Increase/decrease brightness. | Video |
| **Image Position** | Move the image left or right and up or down. | Computer, PAL/SECAM video in full scale model with Fit-To-View turned off (see page 2-20) |
| **Tint** | Changes the color tones. | Video |
| **Saturation** | Increase/decrease color. | Video |
| **Pixel Skip** | Adjusts the image for text mode. | Computer Text mode only |

## CONTROL PANEL INDICATORS

These indicators provide important status information about your projector.

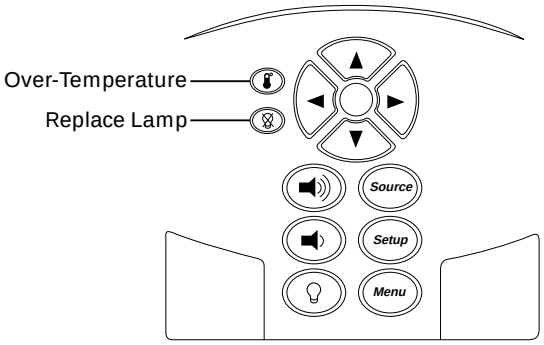


**Figure 2-11** Lightbook projector's control panel indicators

| INDICATOR | FUNCTION |
|---|---|
| | Glows red to warn of an over-temperature condition.<br>Flashes quickly if the projector is not completely open. |
| | Flashes slowly if the spare lamp burns out.<br>Glows red when the active lamp burns out.<br>Flashes quickly if the projector is not completely open. |

### Over-Temperature

The indicator glows red if the projector overheats. A thermostat automatically turns off the power to the lamp until the projector cools.

If an over-temperature condition occurs, perform the following checks while you allow the projector to cool:

- Verify that the room temperature is below 86° F (30° C).
- Check the intake and exhaust vents. Clear any obstruction to the air flow.
- Make sure that the fans are working. If the projector has reached an over-temperature condition and the fans are working, you should feel a strong flow of hot air from the left rear vent. If the fans are not working, the projector needs service.

***NOTE:*** *If you are using the projector at a high altitude location or in a warm room, you may want to switch to High Altitude mode (Preferences menu) to run the fans at a higher speed (see page 2-23).*

After the projector returns to its normal operating temperature, turn the main power switch off and back on to clear the over-temperature indicator.

***NOTE:*** *The remote control's ☼/O key will not function after an over-temperature condition until the main power switch is turned off and on.*

## Projector Not Open

Both the ⊗ and ⓘ indicators will flash quickly if the projector is not completely open. Make sure that the projector locks into the open position.

## Replace Lamp ⊗

The indicator will glow red if the primary bulb burns out. The indicator will flash if the spare projection lamp burns out. If both lamps have burned out, you cannot continue your presentation until you replace the lamp. See page 4-2 to replace the lamp.

***NOTE:*** *When the lamp nears the end of its life, it may shut off without the ⊗ lamp staying on. If this happens, press the ⊗ button twice. If the lamp does not stay on, switch to the spare bulb or replace it.*

## USING THE CYCLOPS REMOTE CONTROLS

The Cyclops® Remote Control contains all the key functions available on the projector control panel as well as several additional features.

The Cyclops Quick Remote allows you to control several of the projector's most popular features. For best results, aim the remote control at the projection screen or at the projector's front panel. Do not obstruct the red infrared eye located on the front of the projector.

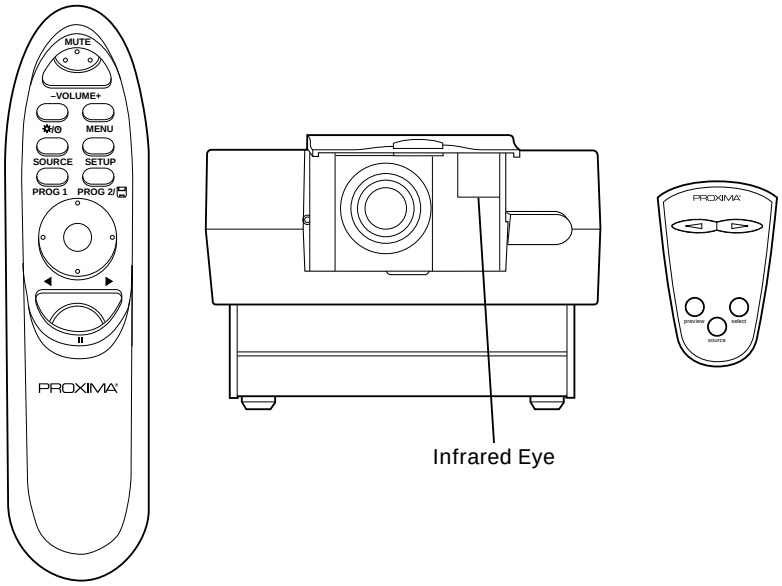


**Figure 2-12** Cyclops Remote Control, Infrared Eye, and Cyclops Quick Remote

## Cyclops Remote Control

| KEY | FUNCTION |
|---|---|
| **MUTE** | Turns audio on or off. |
| **– VOLUME +** | Decreases or increases the volume of internal and external speakers. |
| **☼/⏻** | Turns the lamp on or off. |
| **MENU** | Displays or hide the menu. |
| **SOURCE** | Switches between connected sources. |
| **SETUP** | Displays the Setup menu (see page 2-7). |
| **PROG1** | Programmable key (see page 2-23). |
| **PROG2/** | Programmable key (see page 2-23). |
| | Acts like an arrow key or mouse click. Press the edges to move the screen cursor. Press the center to send a mouse click. To drag an object, position the cursor over it, then press the center button for two seconds. Move the cursor to the new location, and press the center button again to release it. |

## Cyclops Quick Remote

The Cyclops Quick Remote allows you to control the most often used projector functions.

***NOTE:*** *Several of the remote control functions require the installation of Proxima's Cyclops F/X software (see Chapter 3).*

| KEY | FUNCTION |
|---|---|
| | Moves a presentation (PowerPoint, Persuasion, etc.) forward or back one frame. This function can only be used if Cyclops F/X is installed. |
| **Preview** | Allows you to preview an image from a presentation (PowerPoint, Persuasion, etc.) if Cyclops F/X and a separate monitor are installed. Refer to the See It/Show It feature in Chapter 3 for more information. |
| **Select** | Selects a pre-programmed projector feature that you can choose from the Preferences menu (see page 2-23). |
| **Source** | Switches between connected sources. |

## OPERATING MODES

The Lightbook projector can operate in Local or Host mode.

### Local Mode

Any time you activate the projector's menus or the drawing tools, the projector is in Local mode. In Local mode, the remote control can be used for projector menu and draw functions only. It does not communicate with the computer, even if it is attached through the SERIAL port.

In Local mode, the remote control can be used to:

- Select items in the projector menus.
- Control the drawing cursor.

### Host Mode

If a data cable is connected between the projector's SERIAL port and the computer, the projector can operate in Host mode. In Host mode, the remote control can be used to control the Cyclops F/X software if it is installed on your computer. Cyclops F/X can be used with both the Cyclops Remote and Cyclops Quick Remote.

## USING THE MENUS

Your Lightbook projector features a graphical user interface that makes it easy to control all of the projector's functions. Menu selections can be made with the projector control panel or remote control. Menus will change based on the type of video source you have connected.

1. Press MENU to display the on-screen menus.
2. Press the ▲ and ▼ keys or the edges of the remote control mouse disk to select the desired menu item. An item is highlighted when it is selected.
3. Use the ◀ and ▶ keys or mouse disk to move across the menus.
4. Use the ▲ and ▼ keys or mouse disk to move down a menu column or to change a menu value.
5. Press MENU again to close the menu. Settings are automatically saved when you exit the menus.

***NOTE:*** *You must use the Cyclops Remote to open the menus and select items in them. The Cyclops Quick Remote cannot access the menus.*

## Using the Main Menu

Press MENU to display the Main menu. To turn the menu off, press MENU again.

**Figure 2-13** Main menu

The menu displays only those items that are relevant to the current input source (computer, video, or S-Video). The following table lists the Main menu options:

| MENU | ACTIONS |
|---|---|
| **Tools** | Selects a projector tool. |
| **Input Source** | Selects a video source and adjusts the settings of an incoming signal. |
| **Image** | Sets the display characteristics. |
| **Audio** | Controls the audio volume. |
| **Fine Audio** | Selects mono or stereo. Adjusts balance, treble and bass. |
| **Preferences** | Programs a custom key on the remote control or increases the fan speed for high altitude use. |
| **Advanced** | Selects one of five languages for the menus, or selects rear, inverted or other projection options. |
| **Help** | Displays connection diagrams and general help. |

## Selecting a Tool

The Tools menu is used to set up and activate:

- The LightBoard™, WhiteBoard and BlackBoard tools.
- The Timer.
- The Reveal function.

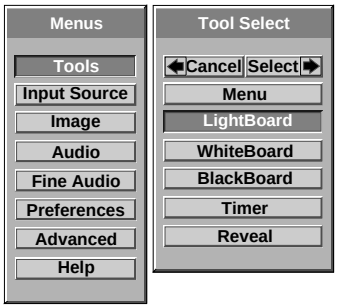


**Figure 2-14** Tool Select menu

Use the ▲ and ▼ keys to select a tool. Press ▶ to select it or ◀ to cancel it.

### *Using the Draw Tools*

The Draw tools allow you to highlight text or other objects on the screen or to draw on a white or black background with the remote control.

**1** From the Tool Select menu, select one of the drawing tools.

| | |
|---|---|
| **LightBoard** | Uses the Pencil tool to highlight or annotate the projected image. |
| **WhiteBoard** | Clears the screen and provides a white background for the Draw tool. |
| **BlackBoard** | Clears the screen and provides a dark background for the Draw tool. |

**2** The Draw toolbar appears in the upper left of the display.

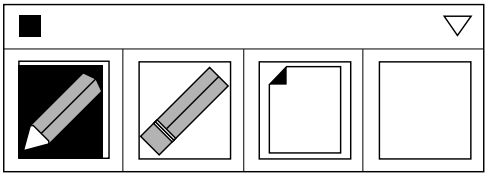

**Figure 2-15** Toolbox

**3** The current tool (Pencil or Eraser) is highlighted and a cursor appears. Use the remote control to draw on the screen.

### *Draw Tool Bar*

The Draw tool bar has four options:

**Pencil**

Click to select the Pencil tool.

**Eraser**

Click to select the Eraser. You can erase portions of your highlights.

**Clear All**

Click to erase all previous highlighting.

**New Color**

Click to select a new color. This button also shows the currently selected color.

### *Choosing a Color*

1 Click New Color or the down arrow in the upper right corner of the Draw tool bar to display the color palette.

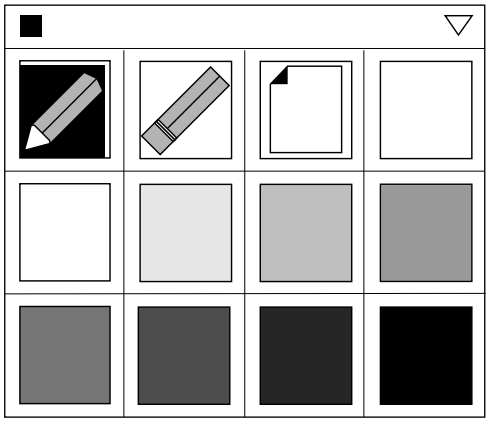

**Figure 2-16** Toolbox Color palette

2 Click the color you want to use. The Color box takes on the selected color, and the color palette remains on the screen.

3 Click the Color box or the down arrow in the upper right corner again to turn the color selection boxes off.

4 To draw, click and hold the center of the MouseDisk at the desired starting point for about 2 seconds to lock it. Then, press the edges of the MouseDisk to move the Pencil tool and draw on the screen.

5 To exit Draw, click the small box in the upper left corner of the Draw tool bar.

You can move the Draw tool bar to another location on the screen. With the remote control, click and hold the center of the MouseDisk with the cursor on the top of the tool bar. Drag the bar to the new location and release the center button.

### *Setting the Timer*

Use the Timer menu to start and reset the on-screen digital timer. You can set the Timer to count down for breaks, class activities, and other presentation requirements.

**Figure 2-17** Timer menu

1 From Tool Select, choose Timer and press the ▶ key.

2 Use the ▲ and ▼ keys on the control panel or the MouseDisk on the remote control to set the time.

3 Press ◀ to reset the timer to the last setting used.

4 Press ▶ to start or stop the timer count down.

### *Reveal*

Use this feature to slowly reveal a screen for greater audience impact.

**1** Choose Reveal and press the ▶ key to select it.

**2** Use the ▲, ▼, ◀ or ▶ keys to gradually display the image.

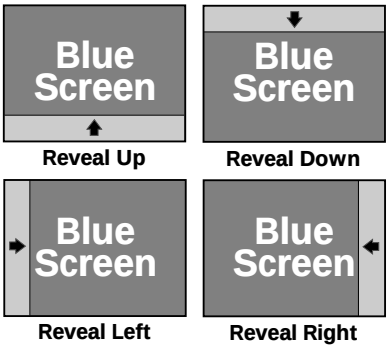


**Figure 2-18** Reveal patterns

## Input Source Menu

The Source Mode box indicates which video source has been detected by the projector.

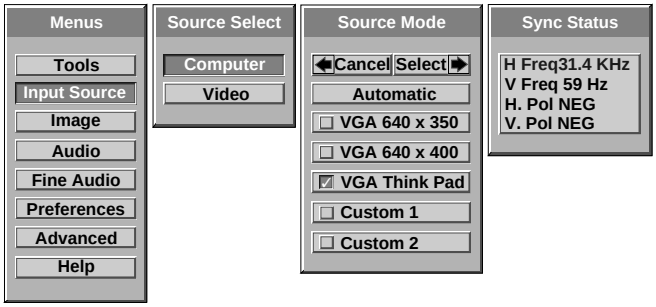


**Figure 2-19** Input Source menu

| MENUS | SETTING |
|---|---|
| **Source Select** | Selects computer and video input sources. |
| **Source Mode** | Changes to an input source that matches or is close to the current source. |
| **Sync Status** | Displays the Horizontal and Vertical frequency and the polarity of the current video source. |

### *Changing the Input Video Source*

Your Lightbook projector will check the connections and automatically select a size, position, and sync setting for any connected device.

**1** To change the input source, use the ▶ key to move to the Source Select box.

**2** Press the ▲ and ▼ keys to select Computer or Video.

***NOTE:*** *There will be a brief delay before the source changes.*

### *Changing the Source Mode*

Your Lightbook projector automatically senses the type of device connected to each input port.

To change the Source mode,

**1** Choose Automatic if you want the projector to size and adjust the image automatically. You can save this setting into one of the available custom modes (see page 2-19).

The Source Mode box displays a □ next to all of the input source settings that match or are close to the type of source you have connected.

**2** To change the Source Mode setting, use the ◀ and ▶ keys to move to the Source Mode box and use the ▲ and ▼ keys to select a different input source.

**3** Use the ◀ and ▶ keys to either Cancel ( ◀ ) or Select ( ▶ ) the new source entry. A ✓ will appear in the box next to that option.

The input measurements of the current settings are displayed under the Sync Status heading, next to the currently selected video mode.

### *Recalling Custom User Settings*

To recall your custom settings, select them from the Source Mode menu.

**1** Use the ▲ and ▼ keys to select the custom settings (see page 2-19) that you want to recall.

**2** Press ▶. The projector will recall the custom settings.

## Image Menu

The Image menu displays a series of adjustment slide bars with the current settings. Use the ▲ and ▼ keys to move the bars up or down to adjust the settings.

***NOTE:*** *The menus vary according to the current input source.*

**Computer Source**

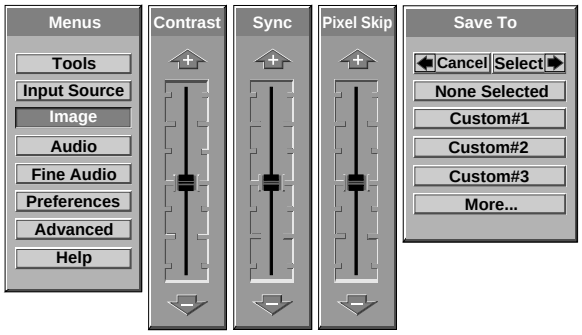


**Video Source**

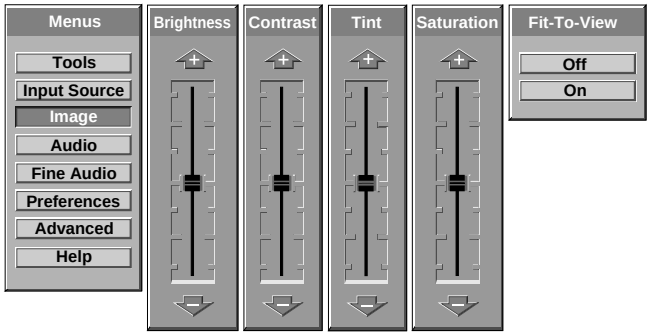


**Figure 2-20** Image menus

The following table lists all of the available settings for the Image menu. Use the ▲ and ▼ keys to change them.

| ADJUSTMENT | FUNCTION | SOURCE |
|---|---|---|
| **Contrast** | Increases or decreases the contrast level of the image. | All sources |
| **Sync** | Helps reduce uneven horizontal features, such as lines of text, streaks or shimmering in the image, or vertical black lines that may appear on the screen. | Computer |
| **Pixel Skip** | Adjusts the image for text mode. | Computer Text mode only |
| **Brightness** | Makes the screen image brighter or darker. | Video |
| **Tint** | Changes the color tones. | Video |
| **Saturation** | Increases or decreases the saturation of the image colors. | Video |
| **Save To** | Saves the current settings. | Computer |
| **Fit to View** | Compresses the image to fit on the display. | PAL/SECAM video only |

### *Saving Custom Settings*

A set of customized values for every video mode can be stored for up to twenty custom modes.

If you want to store custom settings,

1. Before you make any changes, use the ◄ ► keys to move to the Save To menu. Use the ▲ and ▼ keys to select Custom #1, 2, etc. Click More to see additional Custom Mode listings. Press ► to select a new Custom Mode number.
2. Make any desired projector adjustments.
3. Close the menu to save your changes to the new Custom Mode.

## Audio Menu

Use this menu to select an audio source, adjust the volume, or to select speakers.

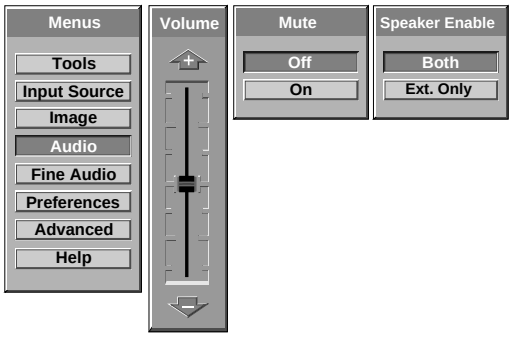


**Figure 2-21** Audio menu

| MENU ITEM | SETTING |
|---|---|
| **Volume** | Raises or lowers the speaker volume for the selected source. |
| **Mute** | Mutes the speaker sound. |
| **Speaker Enable** | Selects internal and external (Both) or external speakers only (Ext. Only). |

## Fine Audio Menu

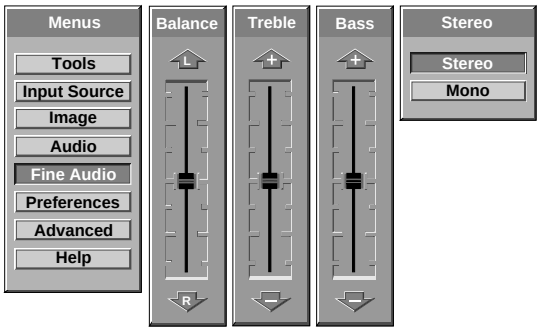


**Figure 2-22** Fine Audio menu

| MENU ITEM | SETTING |
|---|---|
| **Balance** | Adjusts the balance between the left and right speakers. |
| **Treble** | Adjusts the treble. |
| **Bass** | Adjusts the bass. |
| **Stereo** | Select stereo when playing a stereo source from both left and right audio inputs. Select Mono when using a monaural source for simulated stereo output. |

## Using the Audio Menus

You can include audio in your presentation in a variety of ways.

### *Selecting Stereo Audio*

1. Open the Fine Audio menu and select Stereo. Adjust the balance, treble and bass.
2. Press MENU to exit.

### *Muting Audio with the Menu*

1. Open the Audio menu.
2. Select Mute, then select On.
3. Press MENU to exit and mute the audio.

### *Simulating Stereo While Using a Monaural Source*

1 Open the Fine Audio menu. Select the Stereo menu, and then select Mono.

2 Press MENU to exit.

***NOTE:*** *If you are using a monaural source, it must be connected to the L-AUDIO input.*

## Preferences Menu

Use this menu to tailor the projector to your personal presentation style.

**Figure 2-23** Preferences menu

| MENU ITEM | SETTING |
|---|---|
| **Prog Key 1 and 2** | Assigns a specific projector function to one of the PROG keys on the Cyclops Remote Control or to the Select key on the Cyclops Quick Remote.<br>• LightBoard - Opens or closes the Draw tools.<br>• WhiteBoard - Draw on a white background.<br>• BlackBoard- Draw on a black background.<br>• Timer - Start or reset the Timer.<br>• Reveal-Gradually reveals the video image.<br>• Freeze- Freezes the image on the screen.<br>• Host - Enables a special effect selected in Cyclops F/X. |
| **Operation Mode** | Select High Altitude to run the projector fans at higher speed. Use this setting if you are at a high altitude location or in a warm room. |

To set the PROG 1 or 2 keys, use the ▲, ▼, ◄ and ► keys on the Cyclops Remote to select the function that you want to assign to each PROG key. The Select key on the Cyclops Quick Remote will select the feature assigned to the PROG 2 key in the Preferences menu.

## Advanced Menu

Use the Advanced menu to adjust the projector settings to suit a particular presenter's style and taste.

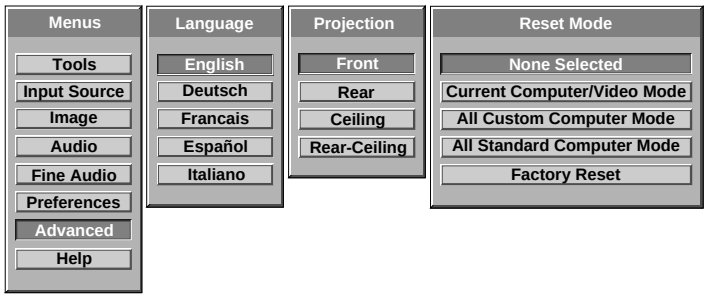


**Figure 2-24** Advanced menu

| MENU ITEM | FUNCTION |
|---|---|
| **Language** | Display the menus in any of five languages. |
| **Projection** | Flips the image for rear and ceiling projection. |
| **Reset Mode** | Select Reset to return the settings for the current image source to the factory defaults. |

## Help Menu

Select Help from the Main menu to display connection diagrams for your PC, Macintosh, or video source.

**Figure 2-25** Help menu

**1** Press ▲ or ▼ to select the item you want Help on. Press ▶ to display that item, or ◀ to cancel.

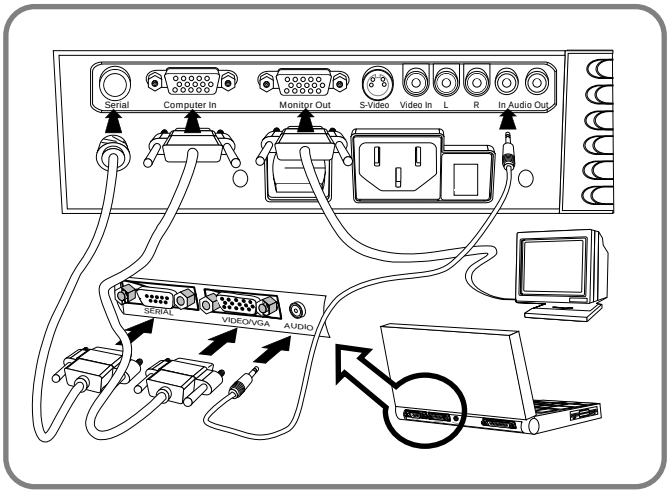


**Figure 2-26** PC Help screen

Chapter 3

# Cyclops F/X

Your projector comes with Cyclops F/X — software effects that you can use to make your presentations more interesting and effective. For example, you can use the Spotlight to call attention to specific areas on the image, use the Zoom or Magnify effects to focus on important information in the image, or use See-it/Show-it to preview images on your computer without distracting your audience.

You can use Cyclops F/X with either the remote that came with your projector or the optional Cyclops interactive pointer system, or both at the same time.

***NOTE:*** *Cyclops F/X is not available for UNIX systems.*

***NOTE:*** *You cannot use Cyclops F/X with the MediaExpress system.*

To use Cyclops F/X, follow these steps (details are covered throughout this chapter):

1. Use the serial cable appropriate for your system (PCs: C936-6 or Macs: C470-6) to connect the serial port on your computer to the CYCLOPS port on the projector.

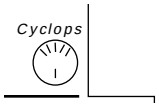


**Figure 3-1** Cyclops port on the projector

2. Install the Cyclops F/X software.
3. Start Cyclops F/X, customize the effects, and assign them to specific keys on the keyboard or buttons on the remote control.
4. Minimize the Cyclops F/X main screen.

Then, just press the assigned key or button during your presentation to start an effect.

This chapter is designed to give you a brief introduction to the Cyclops F/X software.

***NOTE:*** *Updates to the Cyclops F/X software are available for download from the World Wide Web at http://www.prxm.com.*

## INSTALLING CYCLOPS F/X

Follow these steps to install the Cyclops F/X software:

1. Insert the disk labeled Proxima Cyclops F/X into your computer's floppy drive.
2. Do one of the following:
   - In Windows 95, choose Start, Run, then type a:\setup.exe (or the drive letter for your floppy drive).
   - In Windows 3.x, choose File, Run, then type a:\setup.exe (or the drive letter for your floppy drive).
   - On a Macintosh, double-click the disk icon, then double-click the Cyclops F/X Installer icon in the disk window. Drag the Cyclops F/X icon onto the hard disk icon.
3. Follow the instructions that appear on your screen.

## STARTING CYCLOPS F/X

Once you're finished with the installation, do one of the following:

- In Windows 3.x or Windows 95, double-click the Cyclops F/X icon to start the program.
- For Macintosh users, the software will automatically load each time you start your computer.

### Windows users

The first time you start the software, Cyclops F/X displays a Projector Setup Tutorial (Wizard). Follow the instructions that appear on your screen. When you have finished configuring your system, restart Windows.

The main screen of the F/X program appears:

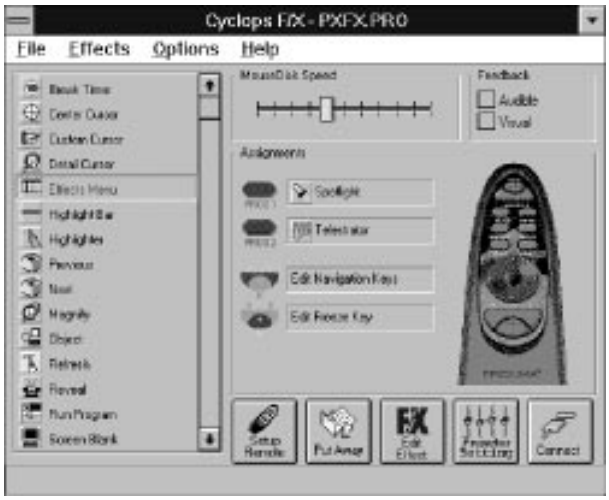


**Figure 3-2** Cyclops F/X special effects

On the left side of this window is a list of the special effects. The Assignments area in the middle of the window provides options that allow you to customize your remote and software.

***NOTE:*** *If you open a menu, or if you're using the LightBoard tool, Cyclops F/X will be suspended.*

## ASSIGNMENTS AREA

The Assignments area displays the custom remote keys and their current assignments. To modify the custom remote keys:

1. Highlight the effect you want to assign.
2. Double-click the box next to the custom remote key in the Assignments area.

The Assignments area also contains five buttons:

| BUTTON | FUNCTION |
|---|---|
| **Setup Remote** | Lets you switch the assignments display between the included Cyclops remote control and the optional Cyclops wand or laser pointer. |
| **Put Away** | Minimizes the F/X screen. |
| **Edit Effect** | Allows you to assign a shortcut key to the effect. You can also use this option to customize an effect. |
| **Projector Setting** | Allows you to adjust image, audio, and general settings on your projector. |
| **Connect** | Allows you to choose the COM port to which you will connect your projector. |

In addition, the Assignments area allows you to control the MouseDisk speed on your remote, and gives you checkboxes to turn on audible and visual feedback.

## CUSTOMIZING EFFECTS

Most effects have options that you can tailor to both the presentation and your own presentation style.

For example, you can customize the Spotlight effect to specify the shape and size of the spotlight. You can also change the name of each effect (for example, you can change the name from “Spotlight” to “Headlight”).

You can assign each effect to a key on the keyboard or a button on the remote control. The key or button you choose starts that effect.

To customize an effect:

1. Right-click the name of the effect and choose Edit from the menu. You can also select the desired effect and click the Edit Effect button to make your changes.
2. Adjust the settings in the appropriate dialog box and click OK.
3. When you’re finished customizing the effect, choose File and Save to save your settings.
4. Click the control box in the upper right corner to minimize the Cyclops F/X main screen.

***NOTE:*** *To access effects that are assigned to the Prog 1 and Prog 2 keys, assign the settings for those keys (in the projector's Preferences menu) to Host.*

## USING THE CYCLOPS INTERACTIVE POINTER SYSTEM

You can use the Cyclops interactive pointer system with Cyclops F/X. To set up the software, click Setup Remote in the Assignments area of the mains screen. Choose Cyclops Wand or Laser Pointer. The following screen appears:

**Figure 3-3** Cyclops interactive pointer screen

Click the Show Navigation Bar checkbox to enable the navigation bar. This will provide you with a quick way to scroll through your slide show with the Cyclops wand or laser pointer.

Click on the Edit Navigation Bar button. The following screen appears:

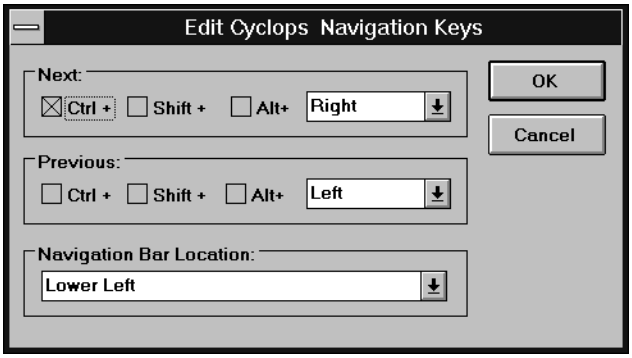


**Figure 3-4** Edit Cyclops Navigation screen

Use this screen to assign different options to the navigation bar. To assign a new function to the navigation bar, click the Next or Previous areas and assign a function using the list boxes to the right.

You can also use this screen to define where the navigation bar will appear on your display. The default is Lower Left.

## SEE-IT/SHOW-IT

See-it/Show-it is a feature of Cyclops F/X that previews the next slide in your presentation on your computer monitor—without switching from the slide your audience sees. The See-it/Show-it feature displays the image, along with a timer that counts down on your computer monitor until See-it/Show-it displays the next slide. You can use See-it/Show-it to preview slides so that you can interact with your audience, while preparing for the message on the next slide.

To use See-it/Show-it:

1. Click Edit Navigation Keys in the Assignments area of the Cyclops F/X main screen. The following screen appears:

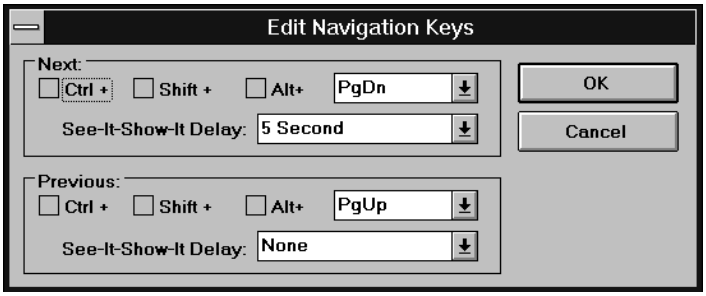


**Figure 3-5** Edit Navigation Keys screen

2. Select a countdown time for the Forward or Reverse keys, or both. When you select a countdown time, See-it/Show-it is automatically enabled.
3. To disable See-it/Show-it, select None from the Forward and Reverse key list boxes.

To switch to See-it/Show-it, press the Forward or Reverse key once quickly. To end See-it/Show-it, press the Forward or Reverse key a second time. The counter disappears and the next slide immediately displays.

## FREEZE

The Freeze option freezes the image on your projector so you can use your remote to control your computer. This might be handy when you want to perform functions on your computer without distracting your audience from your presentation. To edit the Freeze key settings, click the Edit Freeze Key option in the Assignments area. The following screen appears:

**Figure 3-6** Edit Freeze Key screen

To use Freeze:

1. Press PAUSE on your Cyclops remote.
2. Use any of the remote keys to control your computer.
3. Press PAUSE again when you're ready to return to your presentation.

Once you freeze your screen, all of the other keys on your remote are available to control your computer. This means you can edit your current presentation, display slides from another presentation, or even open another application — all without distracting your audience.

***NOTE:*** *If you adjust the projector settings from your computer while you're in Freeze mode, your changes will not display until you exit .*

## STARTING AN EFFECT

Once you've customized an effect, you're ready to use it.

1. Before the presentation, start Cyclops F/X, then minimize the main screen.
2. During your presentation, press the key or button that you assigned to each effect to start the desired effect.

## THE PRESENTATION EFFECTS

The following are the Presentation Effects. To end any of the effects, press the Esc key on your keyboard or the key on remote that you assigned for that effect.

**Break Timer** is a digital timer that counts down from a duration you set. Once you start the timer, click the MouseDisk once to lengthen the duration.

You can also use Break Timer to play a sound or select a background color or picture. If your computer is equipped with a sound card, you can select a .WAV file and play it continuously while the timer is running, or use it as an alarm that sounds when the timer expires.

To set a transparent background, uncheck Color and Picture. To display a picture, check Picture, click File, then select the desired .BMP file.

**Center Cursor** centers the mouse pointer on the screen. This helps prevent "losing" the cursor.

**Custom Cursor** changes the appearance of the mouse pointer to one of 30 images. Only the standard arrow pointer changes. The other standard icons (such as the hourglass) are not affected.

**Detail Cursor** magnifies the area around the pointer in a small rectangle.

**Effects Menu** displays a list of effects. Use this feature to start effects that you haven't assigned to a button or key. To start an effect, double-click its name. Press ESC on the keyboard to close the list without starting an effect.

**Highlight Bar** draws a horizontal bar across the screen. Move the bar up or down to draw attention to different areas on the screen. You can also change the color and width of the bar.

**Highlighter** works like a highlighter pen on your computer screen, by overlaying a semi-transparent color on your screen. You can change the color and width of the "pen."

**Magnify** enlarges a rectangular area around the mouse pointer. You can choose from three levels of magnification (200%, 400%, or 800%).

***NOTE:*** *To enlarge the entire screen, use the Zoom effect.*

**Next/Previous** advances to the next or previous slide.

**Object** allows you to draw rectangles, squares, ellipses, and circles. You can change the color and width of each shape.

**Refresh** repaints the projected image. Use this feature to erase "remnants" of Stamp and Telestrator effects.

**Reveal** hides the image, then lets you incrementally reveal more and more of the image. You can specify a color for the hidden area, a horizontal or vertical effect, and the size of the Reveal window.

**Run Program** starts a program that you choose.

**Screen Blank** blanks the screen to a color that you choose.

**Sound** plays a .WAV file when you press a button. You can play the sound repeatedly or just once.

***NOTE:*** *You must have a sound card to use this effect.*

**Spotlight** dims all of the image except for the area around the mouse pointer. You specify the shape and size of the spotlight (circular, square, or bar). Once you've started Spotlight, press the MouseDisk to change its size. Another setting makes the Spotlight visible against a black background.

**Stamp** allows you to choose from 15 different bitmaps to "stamp," or paste, over the projected image. You can also choose to play a sound each time you stamp.

**Switch to F/X** switches to the Cyclops F/X main screen.

**Telestrator** turns the mouse into a freehand drawing tool. You can customize the color and width of the line and "constrain" the drawing to only horizontal or vertical lines.

**Ticker Tape** displays a scrolling text message across the image. Just specify the text of that you want to appear, the typeface, and the point size. You can play a sound file each time the message runs across the image, and customize the background color and picture.

**Title Screen** projects an image from a .BMP file. You can use this effect to show a predefined image with transition effects during a presentation. You can also play an associated sound. Just specify which file to play and indicate whether to play it when the image appears or continuously.

**Zoom** enlarges the entire image to 200%, 400%, or 800% of its original size. You choose whether to show the mouse pointer during a Zoom and indicate the level of magnification. If you check the Show Cursor During Zoom checkbox, left-click to manually cancel the zoom. If you uncheck the Show Cursor During Zoom checkbox, left-click to change the zoom factor.

***NOTE:*** *Most effects have an option that lets you rename the command itself.*

## MENU COMMANDS

### File menu

The File menu offers the following commands for working with profiles of effects.

| MENU ITEM | FUNCTION |
|---|---|
| **Reset to defaults** | Resets the F/X options to the factory defaults. |
| **Open** | Opens a previously saved profile of settings. |
| **Save** | Saves recent changes to the current profile. |
| **Save As** | Saves the profile settings under a name and location you specify. |
| **Exit** | Quits the F/X program. |

### Effects menu

The Effects menu lets you change the items in the effects list.

| MENU ITEM | FUNCTION |
|---|---|
| **Edit** | Allows you to edit F/X options. |
| **Test** | Tests the current effect. |
| **Add** | Allows you to add an effect. |
| **Duplicate** | Allows you to copy an effect. |
| **Delete** | Allows you to delete an effect. |

## Options menu

The Options menu offers commands that allow you to set up assignments on the remote, wand, or laser pointer, change the look and feel of the cursor, and change the COM port settings.

| MENU ITEM | FUNCTION |
|---|---|
| **Setup Remote** | Allows you to display the assignments area for the Cyclops remote control or the optional Cyclops wand or laser pointer. |
| **Cursor Options** | Changes the look and feel of the cursor. Also includes an option that allows you to apply one of the Cyclops F/X custom cursor options to Windows. |
| **Connect** | Allows you to edit the COM port settings for your computer. |

Chapter 4

# Maintenance

## CHANGING THE LAMP

Follow these steps to change the lamp when the primary bulb burns out:

1. Press the key to turn the lamp off. Allow the fans to cool the lamp until the fans stop.
2. Turn the projector on its back.
3. Lift the tab and pull the lamp assembly up and out. Rotate the assembly and place it back in the projector.

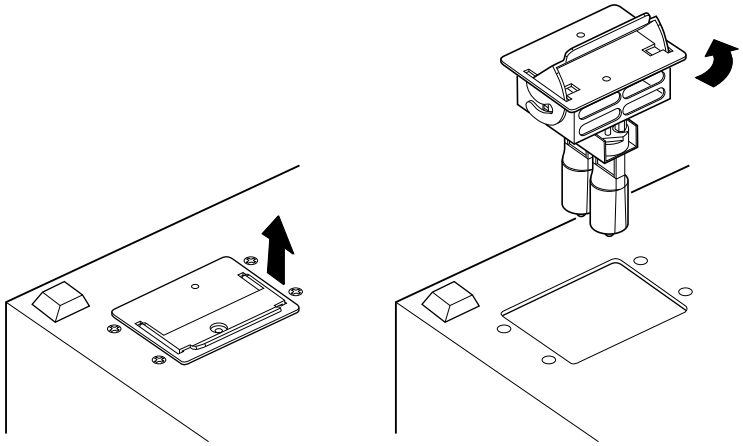

**Figure 4-1** Changing the lamp

***NOTE:*** *Some lamps may fail without turning on the indicator. If the lamp fails and the indicator glows, allow the fans to cool the projector until they stop. If the lamp fails but the indicator does not go on, press the key to turn the lamp circuit off. Then, allow the fans to cool the projector until it stops.*

## REPLACING A BULB

1 Pull the lamp assembly out as shown in Figure 4-1.

2 Pull the bulb out. Insert a new bulb, being careful to avoid bending the pins.

***NOTE:*** *Avoid touching the bulb with your fingers. Oils from your hands can shorten the bulb life. Use a soft cloth to handle the bulb.*

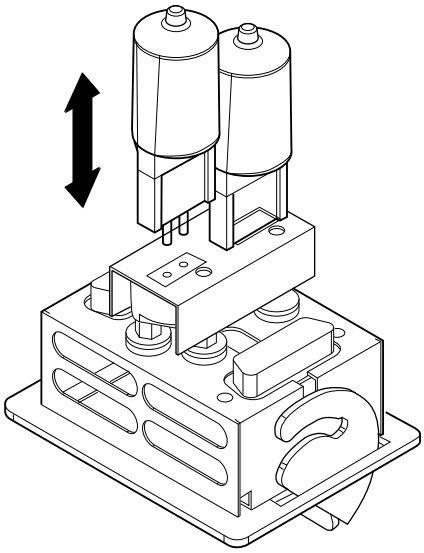

**Figure 4-2** Removing a bulb

3 Replace the lamp assembly as shown in Figure 4-1.

## CLEANING THE LENS

From time to time, you'll need to clean the lens.

1 Take a piece of lens tissue and form it into a loose swab. Wet it with lens cleaning fluid or denatured alcohol, and gently move it over the lens surface.

2 Take a part of the lens tissue that you haven't touched, and repeat the process, going over the lens in another direction.

***CAUTION!*** *Your projector contains electric circuitry and sensitive optics. Protect it from potential fluid spills.*

## CLEANING THE FAN FILTER

Clean the fan filter every 6 months. Clean it more often if the projector is used in dusty environments.

1. Turn the projector over.
2. Wipe the filter off, or use compressed air to blow off any dust that has accumulated on it.

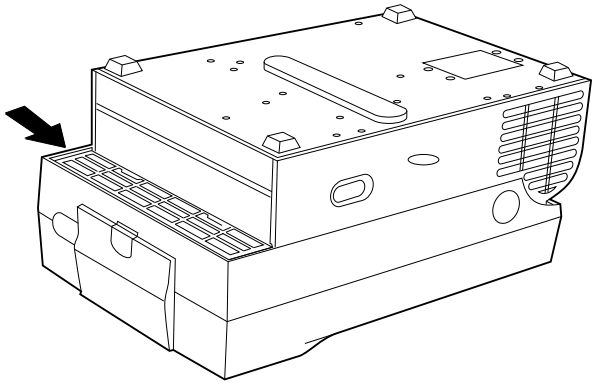

**Figure 4-3** The Lightbook front filter

## CHANGING BATTERIES – CYCLOPS REMOTE

To install or change the two AAA alkaline batteries in the remote control unit:

1. Locate the battery compartment at the lower rear of the case. Slide the cover off the battery compartment.
2. Remove the old batteries and replace them with new ones. Make sure to align the batteries in the proper orientation (see Figure 4-4).
3. Replace the cover on the battery compartment.

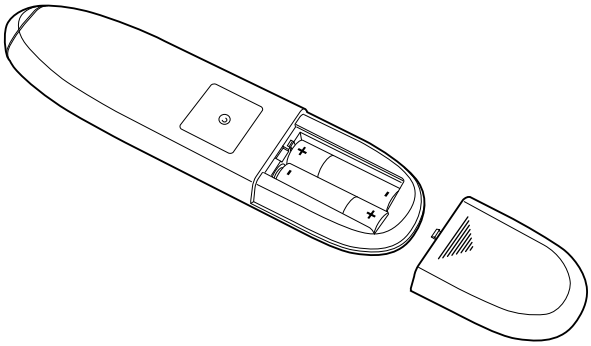

**Figure 4-4** Installing batteries in the Cyclops Remote Control

## CHANGING BATTERIES – CYCLOPS QUICK REMOTE

The Cyclops Quick Remote uses two 357A alkaline batteries.

1. Locate the battery compartment at the lower rear of the case. Press the corner down and slide it off.
2. Remove the old batteries and replace them with new ones. Make sure to align the batteries in the proper orientation.
3. Replace the battery cover.

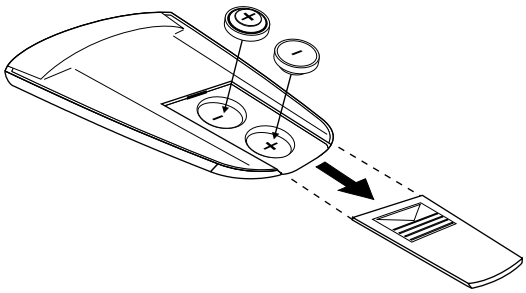

**Figure 4-5** Installing batteries in the Cyclops Quick Remote

Chapter 5

# Troubleshooting

| PROBLEM | LIKELY CAUSE | POSSIBLE SOLUTION(S) |
|---|---|---|
| **No image projected** | No power to projector. | Turn power ON.<br>Check AC cord.<br>Check power to electrical outlet. |
| | Lamp not on.<br>Lamp burned out. | Turn lamp ON.<br>Replace lamp. |
| | Projector not completely open. | Push top assembly up and forward. |
| | Circuit breaker tripped. | Correct overload situation; press circuit breaker reset button. |
| | Over-temperature indication. | Allow projector to cool; turn projector OFF and then ON. |
| **No computer image projected** | Loose cable. | Check and secure cable connections. |
| | No power to computer. | Turn on computer. |
| | Incompatible video system. | If possible, check computer with another monitor. |
| | Laptop video port not activated. | Make sure laptop external video port is activated. |
| **No video image projected** | Video source(s). | Check video source(s). |
| | Loose/improper cabling. | Check and secure cabling between video source(s) and projector. |
| **REPLACE LAMP indication** | Burned-out lamp. | Replace lamp. |

| PROBLEM | LIKELY CAUSE | POSSIBLE SOLUTION(S) |
|---|---|---|
| **Displayed image not square (keystoning)** | Projector not placed at a proper angle to projection screen. | Adjust position of the projector and the screen. Use the Keystone Adjustment lever. |
| **Projected image out of focus** | Projection lens not focused. | Adjust the focus. |
| **Projected image larger than screen** | Projector too far from screen. | Move projector closer to screen. |
| **Projected image smaller than screen** | Projector too close to screen. | Move projector away from screen. |
| **No image on the monitor** | Power switch off or projector not running. | Computer must be on for computer monitor to display. Turn on projector and light the lamp. |
| | Cable not connected. | Connect cable. |
| **Faint screen** | Low CONTRAST or BRIGHTNESS settings. | Adjust CONTRAST and/or BRIGHTNESS. |
| **Jittery, fuzzy text** | Out of sync. | Adjust SYNC. |
| **Image off-center** | Position controls (arrow keys). | Adjust position controls. |
| | Compatibility problem. | Make sure the projector is compatible with one of the standards listed in Appendix A. |
| | Misalignment or damage to optical elements. | Projector requires service. |
| **Cannot get entire image on screen; scrambled image** | Compatibility problems. | Make sure the projector is compatible with one of the standards listed in Appendix A. |
| | Wrong video resolution. | Set video resolution on computer to 640 x 480. |
| **“Shimmering” colors** | SYNC out of adjustment. | Adjust SYNC. |
| **Colors weak** | Weak video signal. | Check for faulty video source, bad connection, or frayed cable. |

| PROBLEM | LIKELY CAUSE | POSSIBLE SOLUTION(S) |
|---|---|---|
| **Getting excessive white or washout** | CONTRAST and/or BRIGHTNESS too high. | Adjust CONTRAST and/or BRIGHTNESS. |
| **Black and white image from color SECAM input** | Video signal ambiguous. | Adjust Tint or Saturation. |
| **No audio** | Audio source(s). | Make sure that the audio source is turned on and functioning properly. |
| | Loose/improper cabling. | Check and secure cabling between audio source(s) and projector. |
| **Over-Temperature indication** | Air vent(s) clogged. | Allow projector to cool; clear obstructions from vents. |
| | Fan malfunction. | Allow projector to cool. Check for fan operation. If the fans are not working, call Proxima Customer Service. |
| | Room is warm or you are at high altitude. | Use the Preferences menu to switch to the High Altitude setting. |
| **Remote Control doesn't work** | Batteries upside-down or old. | Check battery placement or replace with new batteries. |
| | Projector IR receiver window blocked. | Remove object obstructing red IR receiver on front of projector. |

## WHERE TO GET HELP

If you need help:

1. Check the Troubleshooting Chart.
2. Call your dealer's technical support line and explain your problem.
3. Call Proxima at:

   **USA. and Canada:**
   (619) 457-5500. Press 1 for Customer Service.
   (619) 457-8542 (Fax)

   **Outside USA and Canada:**
   (619) 457-5500. Press 1 for Customer Service.
   (619) 622-0173 (Fax)

   **Europe:**
   +31 -43-358 5200
   +31-43-358 5201 (Fax)

   **Internet (WorldWide Web)**
   http:\\www.prxm.com (Click Customer Service)

### Returning your Projector for Repair

If the projector or any of its accessories are determined to be defective:

1. Contact Proxima Customer Service to request a Return Material Authorization (RMA) number.
2. Send the defective unit, including any accessories, cables, and the remote control, with the RMA number clearly marked on the outside of the shipping box, freight prepaid, to:

   **USA and Canada:**
   Proxima Corporation
   RMA #
   9440 Carroll Park Drive
   San Diego, CA 92121

   **Europe:**
   Proxima Corporation
   RMA #
   Horsterweg 24
   6191 RX Beek
   The Netherlands

3. Pack the projector in its original box for safe shipment (include all accessories, cables, and the remote control). If you no longer have the original shipping materials, contact Proxima Customer Service for packaging.

## ORDERING PARTS

Please order replacement and accessory parts through your local reseller, or call Proxima at:

**USA and Canada**
(800) 447-7694 or
(619) 457-5500
Press 1 for Customer Service
Fax: (619) 457-8542

**Outside USA and Canada**
(619) 457-5500
Press 1 for Customer Service
Fax: (619) 622-0173

**Europe**
+31-43-358 5200
Fax: +31-43-358 5201

Appendix A

# Specifications

| | |
|---|---|
| **Color** | 16.7 million colors |
| **Display Technology** | AM LCD |
| **Resolution** | VGA: 640 (H) x 480 (V) pixels |
| **Contrast Ratio** | 125:1 typical |
| **Aspect Ratio** | 4:3 |
| **Compatibility** | NTSC, PAL, SECAM, S-Video<br>PC (VGA)<br>Apple Macintosh & PowerBook series<br>Quadra, Centris |
| **Projection Lamp** | 400 Watt Halogen<br>Replacable lamp indicator light<br>Lamp life 40-60 hours |
| **Brightness** | 250 ANSI Lumens (typical) |
| **Optics** | High-Definition lens with variable focus |
| **Keystone Correction** | 17-29 degrees, adjustable |
| **Audio System** | Digital stereo sound, two built-in 2 Watt speakers |
| **Inputs** | 1 Computer Video<br>1 Composite Video (NTSC, PAL, SECAM, S-Video)<br>1 Computer Stereo Audio<br>1 Composite Video Stereo Audio<br>1 Serial/ADB |
| **Outputs** | Stereo Audio<br>1 Monitor |
| **Power Source** | 90-260 VAC, 47-63 Hertz |
| **Dimensions** | 5” (H) x 9 1/8” (W) x 13 1/2” (L) closed<br>12.7 cm (H) x 23.2 cm (W) x 34.3 cm (L) closed<br>6 3/8” (H) x 9 1/8” (W) x 17” (L) open<br>16.2 cm (H) x 23.2 cm (W) x 43.2 cm (L) open |
| **Weight** | 11.35 lbs. |
| **Throw Ratio** | 1.5:1 fixed lens |
| **Screen Size** | 4.5 ft. (1.6m) to 13.5 ft. (4.5m) |
| **Projection Distance** | 5 ft. (1.7m) to 18 ft. (6.0m) from screen |

Appendix B

# Accessories and Parts

## REPLACEMENT PARTS

| PART | PART NUMBER |
|---|---|
| **Lamp** | L82 |
| **Cyclops Remote Control** | 080-01101-1 |
| **Cyclops Quick Remote Control** | A85 |
| **Power Cord - US** | C1002-10 |
| **Power Cord - Europe** | C1001-10 |
| **Power Cord - United Kingdom** | C1004-10 |
| **Power Cord - Italy** | C1003-10 |
| **VGA Video Cable** | C951-6 |
| **VGA - Mac Adapter** | C922 |
| **Mac - VGA Monitor Adapter** | C924 |
| **S-Video Cable** | C466-6 |
| **Computer Audio Cable** | C498-6 |
| **Serial Cable** | C936-6 |
| **Mini-jack to RCA Cable Adapter** | C5105 |
| **Macintosh ADB Cable** | C4070-6 |
| **Composite Video/Audio Cable** | C497-6 |
| **Cyclops F/X Disks** | A50 F/X |
| **Soft Carrying Case** | A260 |

## OPTIONAL ACCESSORIES

| OPTION | PART NUMBER |
|---|---|
| **Deluxe Soft Carrying Case** | A261 |
| **Deluxe Soft Case for Laptop** | A262 |
| **Rolling Hard Case** | A263 |
| **MicroSaver® Security Cable** | K100 |

# Index


## A

AC Circuit Breaker i-5, 1-3
AC Plug i-5, 1-3
AC Power i-5, 1-3
AC Power Switch 1-4
Accessories B-2
ADB (Serial) Port i-5, 1-3
ADB (Serial) Port Connection 1-12
Advanced Menu 2-24
Arrow Keys i-6, 2-5, 2-6
Audio
    Connecting from a composite video sourc 1-10
    Muting 2-22
Audio In Port i-5, 1-3, 1-9
Audio Menu
    2-21
Audio Menus
    Using 2-22
Audio Out Port i-5, 1-3, 1-11
    External Speaker System Connection 1-11
    External Stereo System Connection 1-11
Audio Port
    Connecting the Source 1-9
    Monaural or Stereo Source 1-10

## B

Balance
    Fine Audio Menu 2-22
Bass
    Fine Audio Menu 2-22
Batteries
    Changing Quick Remote 4-4
    Changing Remote Control 4-3
BlackBoard 2-14
Brightness 2-7
    Image Menu 2-20
Bulb Replacement 4-2

## C

Circuit Breaker i-4
Circuit Breaker Reset switch 1-4
Closing the Projector i-11, 2-4
Color Palette 2-15
Commputer In Port 1-3
Computer In Port i-5
Connector Panel i-4, i-5, 1-3
Connector Table i-5, 1-3
Contents of Box
    Accessories i-2
Contrast 2-7
    Image Menu 2-20
Control Panel i-4
    Keys Table i-6
Control Panel Indicator
    Over-Temperature 2-8
    Projector Not Open 2-9
    Replace Lamp 2-9
Control Panel Indicators 2-8
Control Panel Keys 2-5
Control Panel Lights i-7
Cooling Fans i-4
Custom Settings
    Recalling 2-18
Custom Settings
    Saving 2-20
Cyclops Quick Remote i-4, 2-10
Cyclops Remote Control i-4, 2-10

## D

Desktop PC
    Connecting i-8
Draw Tool Bar
    Clear All 2-15
    Eraser 2-15
    New Color 2-15
    Pencil 2-15
Drawing Tools 2-14

## F

Fan Filter
    Cleaning 4-3
Fine Audio Menu 2-22
Fit to View
    Image Menu 2-20
Focus Ring i-4
Focusing the Image 2-2
Frame Advance
    Quick Remote 2-11

## H

Help
    Where to get it 5-4
Help Menu 2-25

## I

Image Menu 2-19
    Adjustments Table 2-20
    Computer Source 2-19
    Video Source 2-19
Image Position 2-7
Input Source Menu
    Source Mode 2-17
    Source Select 2-17
    Sync Status 2-17
Input Video Source
    Changing 2-18
Internal Speakers i-4

## K

Keystone Adjustment i-4
Keystoned Image
    Correction 2-3

## L

L-Audio-R Port i-5, 1-3, 1-10
Lamp
    Changing 4-1
Lamp Assembly Replacement 4-1
Lamp Key i-6, 2-5, 2-6
    Remote Control 2-11
Language
    Advanced Menu 2-24
Lens
    Opening i-3
Lens Cleaning 4-2
Lens Focus Ring 2-2
LightBoard 2-14

## M

Macintosh
    Video Connection 1-7
Macintosh Adapters 1-7
Macintosh Computer
    Connecting i-9
Main AC Power Switch i-4

Main Menu 2-13
Main Menu Options Table 2-13
Maintenance
    Changing Quick Remote Batteries 4-4
    Changing Remote BatteriesControl Batteries 4-3
    Fan Filter 4-3
    Lamp Assembly Replacement 4-1
    Lens Cleaning 4-2
Menu Key i-6, 2-5, 2-6
    Remote Control 2-11
Menus 2-12
Monitor Out Port i-5, 1-3
Mouse Disk
    Remote Control 2-11
Mute
    Audio Menu 2-21
Mute Key
    Remote Control 2-11

## N

Notebook
    Connecting i-7
    Video Connection 1-5
NTSC
    Connecting i-10

## O

Opening the lens i-3
Opening the Projector i-3
Operating Modes
    Host Mode 2-12
    Local Mode 2-12
Operation Modes
    Preferences Menu 2-23
Ordering Parts 5-5
Over-Temperature 2-8

## P

PAL
    Connecting i-10
Parts
    Replacement B-1
PC
    Video Connection 1-6
PC Help Screen 2-25
Pixel Skip 2-7
Power Cord Receptacle i-4
Power receptacle 1-4
Power Switch 2-2
Powering Up Projector 2-2
Preferences Menu 2-23
Preview Key
    Quick Remote 2-11
PROG1 and 2 Keys
    Preferences Menu 2-23
PROG1 Key
    Remote Control 2-11
PROG2 Key
    Remote Control 2-11
Projection
    Advanced Menu 2-24
Projector
    Closing i-11, 2-4
    Connecting Power 1-4
    Cooling and Airflow 1-2
    Main Parts i-4
    Moving 1-2
    Opening i-3, 2-1
    Positioning 1-1
    Setting up 1-1
    Transporting 1-2
    Turning Off 2-3
    Turning On 2-2

## Q

Quick Remote 2-10
Quick Remote Batteries 4-4
Quick Remote Keys 2-11
Quick Start
    Desktop PC i-8
    Macintosh Computer i-9
    Notebook i-7

## R

Recalling Custom Settings 2-18
Release Button i-4
Remote Control 2-10
Remote Control Batteries 4-3
Remote Control IR Lens i-4
Remote Control Keys 2-11
Repair of your Projector 5-4
Replacement Parts B-1
Reset Mode
    Advanced Menu 2-24
Returning your Projector for Repair 5-4
Reveal 2-17

## S

S-Video
    Connecting i-10
S-Video Port i-5, 1-3
S-Video Source
    Connecting 1-10
Saturation 2-7
    Image Menu 2-20
Save To
    Image Menu 2-20
SECAM
    Connecting i-10
See-it/Show-it 3-7
Select Key
    Quick Remote 2-11
Serial (ADB) Port Connection 1-12
Serial Port i-5, 1-3
Settings Table 2-7
Setup Key i-6, 2-5, 2-7
    Remote Control 2-11
Setup Menu Key i-6
Source Key i-6, 2-5, 2-6
    Quick Remote 2-11
    Remote Control 2-11
Source Mode
    Changing 2-18
Speaker Enable
    Audio Menu 2-21
Special Configurations
    Video Connections i-10
Specifications A-1
Stereo
    Fine Audio Menu 2-22
Stereo Audio
    Simulating 2-23
Sync 2-7
    Image Menu 2-20

## T

Timer Menu 2-16
Tint 2-7
    Image Menu 2-20
Tool Select Menu 2-14
Tool Selection 2-14
    Choosing a Color 2-15
    Draw Tool Bar 2-15
Tool Selection Menu
    Timer 2-16
Treble
    Fine Audio Menu 2-22
Troubleshooting 5-1
    Help 5-4
    Returning for Repair 5-4
Turning off the Projector 2-3

## V

VGA Video Cable 1-6
Video Connection
    Macintosh 1-7
    Notebook 1-5
    PC 1-6
    Special Configurations 1-8
Video In Port i-5, 1-3
    Composite Video Connections 1-9
Volume
    Audio Menu 2-21
Volume Key 2-6
    Remote Control 2-11
Volume Keys i-6, 2-5

## W

WhiteBoard 2-14