myprojectorlamps.com

The most trusted, dependable name in projector lamp sales.

http://www.myprojectorlamps.com

http://www.myprojectorlamps.ca

http://www.myprojectorlamps.eu

The following projector manual has not been modified or altered in any way.

USER'S GUIDE

PROXIMA®

Desktop Projector™

Model DP5100

Warranty

Proxima Corporation warrants that the Proxima® Desktop Projector™ product manufactured by Proxima is free from defects in materials and workmanship under normal use during the Warranty Period. The Warranty Period commences on the day of purchase by the end–user. The Warranty Period is one year. The Desktop Projector lamps are not covered by this Warranty.

The end–user's sales receipt or invoice showing the date of purchase of the product and the name of the Reseller is proof of date of purchase. The Warranty extends only to the original purchaser and is not transferable.

During the Warranty Period, Proxima will, at no additional charge, repair or replace defective parts or at the option of Proxima, replace the entire unit.

This limited Warranty does not extend to any Proxima product that has been damaged or been rendered defective (a) as a result of accident, misuse or other abuse; (b) by the use of parts not manufactured or sold by Proxima; (c) by modification of the product; or (d) as a result of servicing by non–authorized personnel.

Limitation of Warranties

The foregoing Warranty is expressly in lieu of any other expressed or implied warranties, including, without limitation, warranties of merchantability or fitness for a particular purpose. To the extent not prohibited by law, all statutory warranties are hereby waived and excluded from this Warranty. Proxima expressly disclaims all warranties not stated in this Limited Warranty.

FCC Statement

Warning: This equipment generates, uses and can radiate radio frequency energy and, if not installed and used in accordance with the instruction manual, may cause interference to radio communications. It has been tested and found to comply with limits for a Class "A" computing device pursuant to Subpart B of Part 15 of the FCC Rules, which are designed to provide reasonable protection against such interference when operated in a commercial environment. Operation of this equipment in a residential area is likely to cause interference in which case the user, at his own expense, will be required to take whatever measures may be necessary to correct the interference.

Trademarks, Patents, and Copyright

Proxima is a registered trademark of Proxima Corporation. Desktop Projector and trade dress are trademarks of Proxima Corporation. IBM is a registered trademark of International Business Machines Corporation. Macintosh is a registered trademark of Apple Computer, Inc. Other trademarks are the property of their respective owners. U.S. and foreign patents are pending.

© Copyright 1995 Proxima Corporation. All rights reserved. Specifications are subject to change without notice.

7/95

Downloaded from Projector.com

Contents

Chapter 1
Introducing the Proxima® Desktop Projector™

Introduction 1–1
What's in the Box? 1–2
Quick Setup Desktop Computers 1–3
Quick Setup Laptop and Notebooks 1–4

Chapter 2
Detailed Setup

Your Proxima Desktop Projector 2–1
Setting up the Projector 2–2
Connecting the Desktop Projector 2–3
- COMPUTER (RGB) 2–4
- VIDEO IN 2–6
- S–VHS 2–7
- COMPUTER AUDIO IN 2–7
- AUDIO IN 2–8
- AUDIO System 2–9

Powering Up 2–9
- Applying Power to the Projector 2–9
- Turning On/Off the Lamp 2–10

Projecting the Image 2–11
- Image Size 2–11
- Image Sizing and Focusing 2–12
- Keystoning 2–12

Chapter 3
Using the Desktop Projector

The Control Panel 3–1
Control Panel Keys 3–2
- STANDBY/ON Key 3–2
- INPUT Key 3–2
- ZOOM Key 3–2
- FOCUS Key 3–2

Control Panel Indicators 3–3
- TEMP Indicator 3–3
- LAMP Indicator 3–4
- ON Indicator 3–4

Remote Control 3–5
STANDBY/ON Key 3–6
RESET Key 3–6
CALL Key 3–6
INPUT SELECT Keys 3–6
ZOOM Key 3–7
FOCUS Key 3–7
MENU Keys 3–7
VOLUME Keys 3–8
MUTE Key 3–8
CHANGE Keys 3–8
BLUE BACK Key 3–8
LIGHT Key (on side of remote control) 3–8
Menus 3–9
Displaying the Menu 3–9
Selecting and Changing Settins 3–9
Saving Changes 3–9
Computer (RGB) Video Menu 3–10
Video Menu 3–11

Chapter 4
Maintenance

Lens Cleaning 4–1
General Maintenance 4–2
Replacing the Lamp 4–2
Cleaning the Air Filter 4–3
Changing the Remote Control's Batteries 4–5
Temperature Extremes 4–5

Chapter 5
Troubleshooting

Troubleshooting Chart 5–1
Where to Get Help 5–4

Appendix A
Specifications

Appendix B
Accessories & Replacement Parts

Index

Downloaded from Projector.com

Chapter 1

Introducing the Proxima Desktop Projector

The Proxima® Desktop Projector™ Model DP5100 is a portable, color data and video LCD desktop projection product that makes sharing data and presenting information as easy as connecting your computer to your monitor.

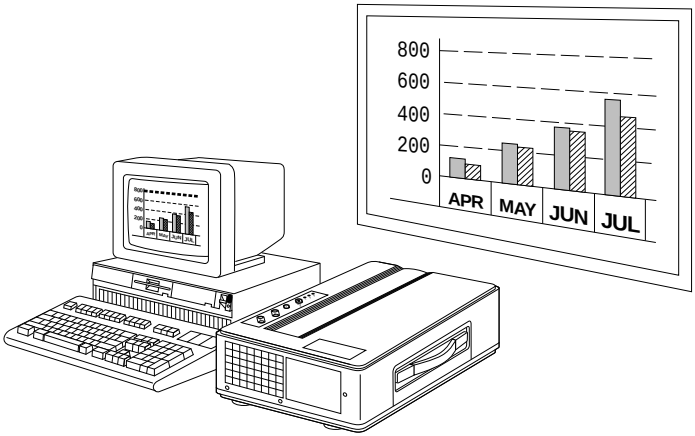

Figure 1-1
The Proxima Desktop Projector DP5100 in use

What's in the Box?

After you've opened the box and removed the Desktop Projector, make sure you have all the items shown in Figure 1-2.

CAUTION! The Desktop Projector 5100 should be treated like any other precision optical instrument. Handle it carefully.

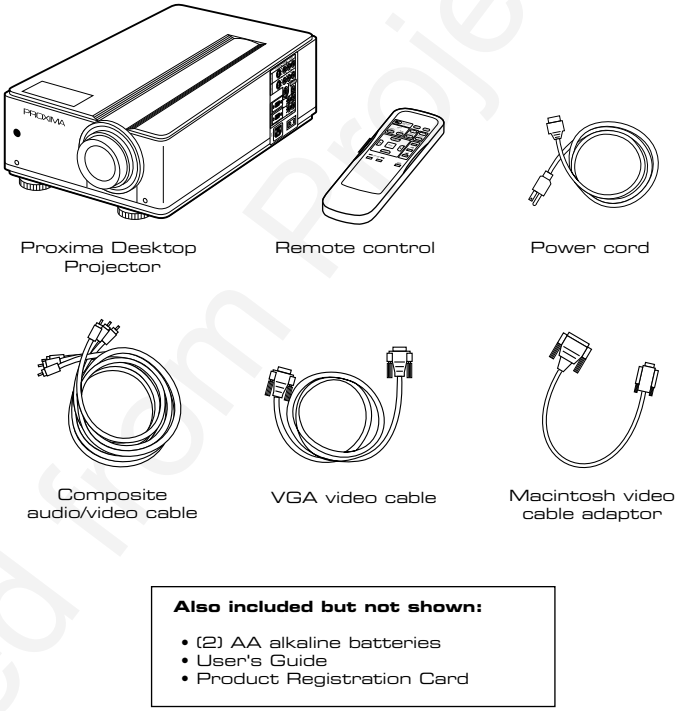

Figure 1-2
Items included with the Desktop Projector 5100

Downloaded from Projector.com

Quick Setup: Desktop Computers

Here are the steps you follow to connect your PC or Macintosh to the projector (to connect to a laptop or notebook computer, follow the instructions on the next page). Each step is described in detail in Chapter 2.

1. Place the projector on a solid, flat surface, at a right angle (perpendicular) to the projection screen, parallel to the floor.

2. Remove the lens cover.

3. Turn off the computer, the monitor, and the projector.

4. Unplug the monitor cable from the video monitor port on your computer.

5. If you are using a Macintosh,

Macintosh Video Cable Adaptor

   a) Connect the Macintosh video cable adaptor (supplied with the projector) to either end of the DP5100 VGA video cable.

   b) Plug the other end of the Macintosh video cable adaptor into the Macintosh's video output (monitor) port. Skip ahead to step 7.

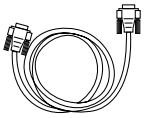

VGA video cable

6. To connect to a PC, plug one end of the DP5100 VGA video cable into the computer's video output (monitor) port.

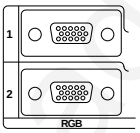

7. Plug the other end of the DP5100 VGA video cable into the projector's COMPUTER (RGB) 1 or 2 port.

8. To connect additional video and audio sources to the projector, see pages 2-6 through 2-9.

9. Turn on the projector, then turn on your computer and monitor.

Downloaded from Projector.com

Quick Setup: Laptop and Notebooks

To connect the projector to your laptop or notebook computer, follow these instructions. Each step is described in detail in Chapter 2.

1. Place the projector on a solid, flat surface, at a right angle (perpendicular) to the projection screen, parallel to the floor.

2. Remove the lens cover.

3. Turn off the computer and the projector.

4. If you have a PC laptop, skip ahead to step 5. To connect to a Macintosh laptop, you will use two additional cables:

   a) Plug the laptop video adaptor cable (supplied with the laptop) into the laptop.

   b) Connect one end of the Macintosh video cable adaptor (supplied with the projector) to the laptop video adaptor cable.

   c) Connect the other end of the Macintosh video cable adapter to either end of the DP5100 VGA video cable. Skip ahead to step 6.

Macintosh Video Cable Adaptor

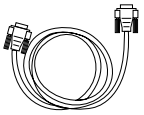

VGA video cable

5. To connect to a PC laptop, plug one end of the DP5100 VGA video cable into the computer's video output (monitor) port.

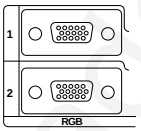

6. Plug the other end of the DP5100 VGA video cable into the projector's COMPUTER (RGB) 1 or 2 port.

7. To connect additional video and audio sources to the projector, turn to pages 2-6 through 2-9.

8. Turn on the projector, then turn on your computer.

Downloaded from Projector.com

Chapter 2

Detailed Setup

Your Proxima Desktop Projector

Before you begin, examine the components of the projector.

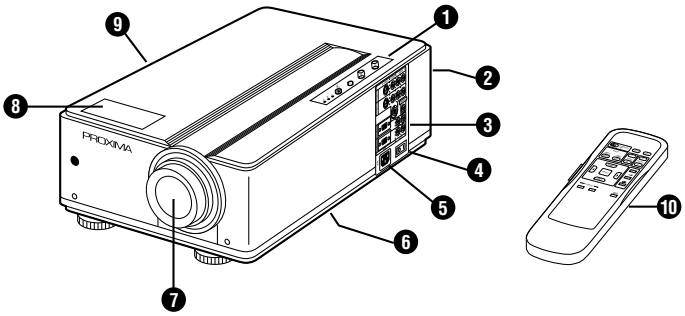

Figure 2-1
The Proxima Desktop Projector and Remote Control

(1) Control panel
(2) Air exhaust (at rear)
(3) Connector panel
(4) AC power switch
(5) Power cord receptacle
(6) Air intake filter (on bottom)
(7) Projection lens assembly
(8) Internal speaker
(9) Handle
(10) Remote control

Setting up the Projector

Setting Up the Projector

1. Place the projector on a solid, flat surface. The projector should be located at a right angle (perpendicular) to the projection screen and parallel to the floor.

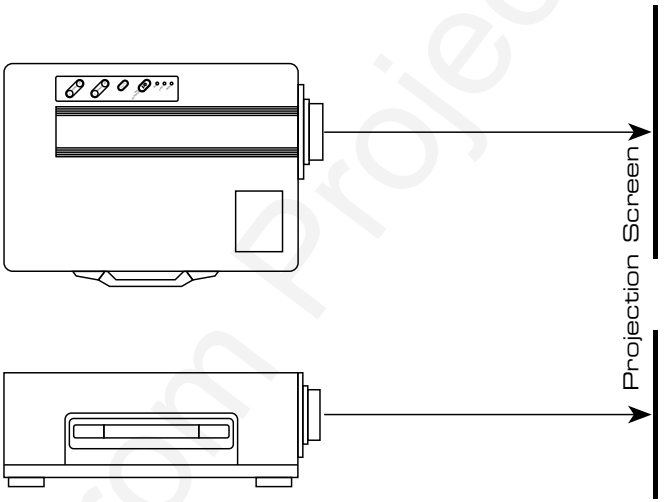

Figure 2-2
Positioning the Desktop Projector, top view and side view

Note: If you're using a media cart, make sure the wheels are locked to prevent it from moving.

2. Remove the lens cover.

Downloaded from Projector.com

Connecting the projector

Take a moment to look at the projector's rear connector panel.

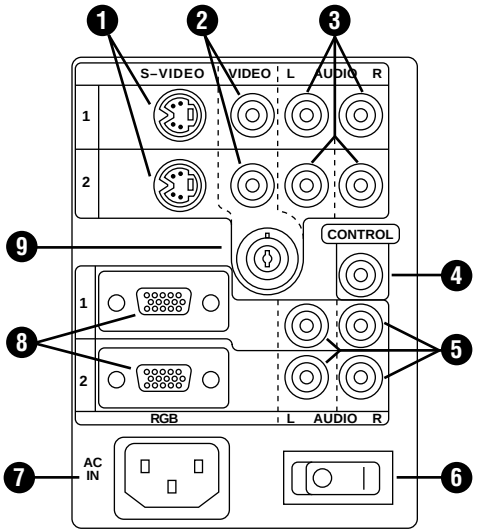

Figure 2-3
The Connector Panel

	Item	Description
1	S-Video inputs	Input from S-VHS or S-video source
2	Video inputs	NTSC/PAL input from VCRs, laserdisc players, and camcorders
3	Audio inputs (from video sources)	Left and right inputs from VCR or other audio source, or amplified or wireless microphone
4	Control	Not used
5	Computer (RGB) Audio inputs	Left and right inputs from computer audio source, or amplified or wireless microphone
6	ON/OFF switch	Main power ON/OFF switch
7	Power jack	Input power connector
8	RGB (Computer) Video inputs	Connects computer video sources to the projector
9	Video input - BNC	BNC-style connector for NTSC/PAL input; Video 2 input source only

Connecting to your Computer

You use the VGA video cable to connect your computer to the DP5100.

Note: If you want to connect your monitor to the computer while the projector is hooked up, you must order the optional distribution amplifier. See Appendix B for information.

Desktop Computers

If you are using a desktop computer, regardless whether it's a PC or a Macintosh, the process of connecting it to the projector is the same. Use the VGA video cable (and the Macintosh video cable adaptor as necessary).

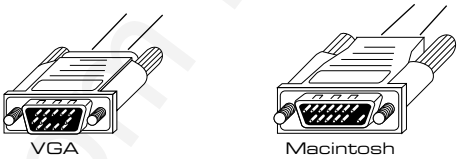

Figure 2-4
VGA and Macintosh connectors

Macintosh Video Cable Adaptor

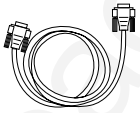
VGA video cable

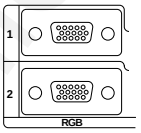

1. Turn off power to the computer, monitor, and the projector.
2. Unplug your monitor cable from your computer's video monitor port.
3. To connect to a Macintosh, plug one end of the Macintosh video cable adaptor into the Macintosh's video output (monitor) port. Connect the other end of the Macintosh video cable adaptor to either end of the DP5100 VGA video cable. Skip ahead to step 5.
4. To connect to a PC, plug one end of the DP5100 VGA video cable into the computer's video output (monitor) port.
5. Plug the other end of the DP5100 VGA video cable into the projector's COMPUTER (RGB) 1 or 2 port.

Downloaded from Projector.com

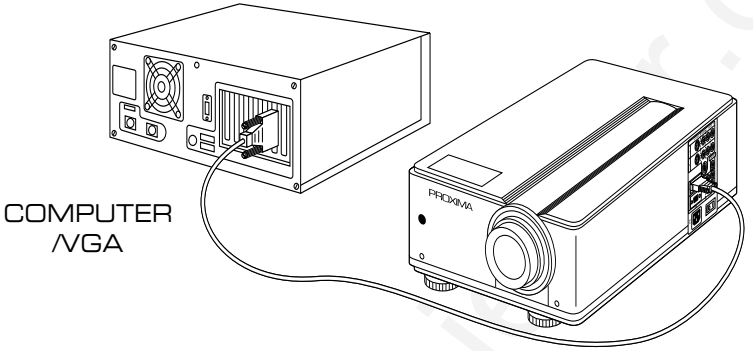

Figure 2-5
Computer video connections

Notebooks/Laptops

1. Turn off power to the computer and the projector.

2. If you are using a Macintosh laptop,

   a) Plug the laptop video adaptor cable (supplied with the laptop) into the laptop.

   b) Connect one end of the Macintosh video cable adaptor (supplied with the projector) to the laptop video adaptor cable.

   c) Connect the other end of the Mac video cable adaptor to one end of the DP5100 VGA video cable. Skip to step 4.

Macintosh Video Cable Adaptor

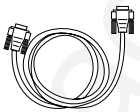
VGA video cable

3. To connect to a PC laptop, plug one end of the DP5100 VGA video cable into the computer's video output (monitor) port.

4. Plug the other end of the DP5100 VGA video cable into the projector's COMPUTER (RGB) 1 or 2 port.

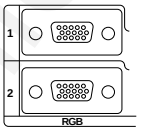

Note: If you can't project an image at the same time that the laptop displays an image, see your laptop's manuals for instructions on switching between the internal screen and the video port.

Downloaded from Projector.com

Special Configurations

If your computer has an internal monitor but does not have external video capabilities (Macintosh SEs and certain PowerBooks), you need a video adapter card in order to attach to the Desktop Projector. Setup for a third-party adapter is identical to the procedures outlined in the section titled *Desktop Computers*. Contact your dealer, Proxima Customer Service, or a third-party supplier for information on video adapters.

Connecting Audio from the Computer

The RGB (COMPUTER) AUDIO IN ports allow audio input from two separate computers or microphones.

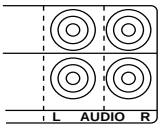

1. Insert the mini jack end of a computer audio cable (not supplied; call your dealer for information) into the AUDIO OUT port of a Macintosh or the sound card of a PC.

2. Insert the RCA jacks at the other end of the computer audio cable into the projector's left and right RGB (COMPUTER) AUDIO ports.

Connecting Video from a VCR

The Desktop Projector 5100 can project video from NTSC or PAL sources (VCRs, laserdisc players, and camcorders).

Downloaded from Projector.com

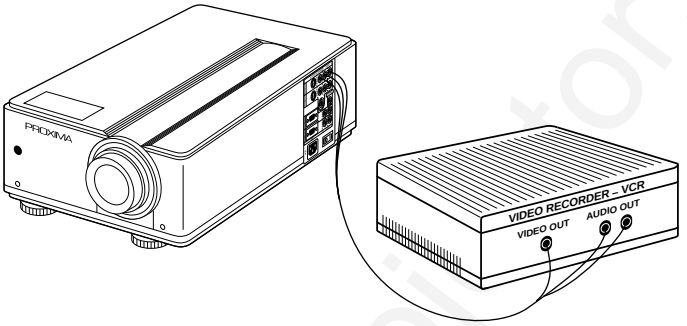

Figure 2-6
The Desktop Projector connected to a video source

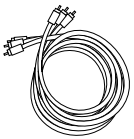

Composite audio/video cable

To connect an NTSC or PAL source to your projector:

1. The composite audio/video cable is made up of 3 cables with yellow, red, and white RCA plugs. Insert the yellow RCA plug into the circular port on your camcorder, laserdisc player, or VCR marked VIDEO OUT, TO MONITOR, or something similar.

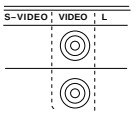

2. Insert the other yellow RCA plug into the projector's VIDEO 1 or 2 port.

The red and white cables are for audio input from the video source. Refer to the section *Connecting audio from a VCR*.

Connecting to S–VHS Video Sources

The Desktop Projector 5100 can project video from an S–VHS or S–Video source.

Downloaded from Projector.com

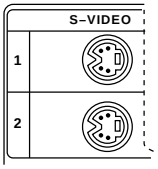

1. Connect one end of your S-Video (Y-C) cable (optional) to the port on the video source marked VIDEO OUT, TO MONITOR, or something similar. The cable has identical round 4-pin connectors on either end.

2. Connect the other end of the cable to the projector's port labelled S-VIDEO 1 or 2.

Connecting Audio from a VCR

The DP5100 has left and right stereo ports for audio inputs from two separate VCRs, laserdisc players, and other video equipment.

Connecting a Video Audio Source

The composite audio/video cable is made up of 3 cables with yellow, red, and white RCA plugs.

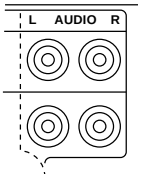

1. Insert a white RCA plug into your video source's left AUDIO OUT port. Insert the other white RCA plug into the projector's left AUDIO port (top right corner of connector panel).

2. Insert a red RCA plug into your video source's right AUDIO OUT port. Insert the other red RCA plug into the projector's right AUDIO port.

Note: Although all four AUDIO IN and COMPUTER (RGB) AUDIO IN ports can be connected simultaneously, only one is active at a time. Audio will be active for the video source you have selected.

Connecting a Monaural Source

If you have a monaural source that you want to play through the projector's speaker, connect it to the left AUDIO port.

Downloaded from Projector.com

Connecting a Microphone

When you need to address a large audience while projecting an NTSC, PAL, or S-VHS video image with no accompanying audio, plug an amplified or wireless microphone equipped with a line level output (maximum level of 1 volt, peak-to-peak) into the left AUDIO port that corresponds to the input port you are projecting the video through.

To address a large audience while projecting a computer image, connect the source to the projector's left and right RGB (COMPUTER) AUDIO ports that correspond to the input port you are projecting the computer video through.

If your microphone's amplifier has only one output, use a standard RCA cable to connect it to the projector's left AUDIO IN or left RGB (COMPUTER) AUDIO IN port.

AUDIO System

The DP5100 contains an internal sound system consisting of an amplifier and a high-fidelity speaker. A separate audio system must be used for external speakers or a sound system.

Powering Up

The projector must be turned on *before* you turn on your computer, so that the computer properly senses the projector's display during its boot-up sequence.

Downloaded from Projector.com

Turning on the Projector

On the connector panel there is a power jack and a power switch.

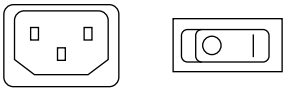

Figure 2-7
Power jack and AC POWER switch

To turn on the projector:

1. Plug the power cord into the projector's power jack on the connector panel.
2. Make sure that the air intake on the bottom and exhaust grill on the rear of the projector are not clogged or blocked. Never operate the projector if these grills are clogged or obstructed.
3. Connect the power cord to a properly grounded wall outlet.
4. Move the AC POWER switch to the ON position. The ON indicator on the control panel will glow orange. If it does not glow orange, refer to *Chapter 5, Troubleshooting*.

Turning On/Off the Lamp

Press the STANDBY/ON button on the projector or the remote control. The ON indicator blinks green during lamp start-up and then glows green; the fan comes on immediately.

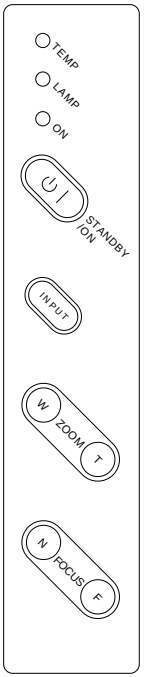

Figure 2-8
The Control Panel

Downloaded from Projector.com

Press the STANDBY/ON button on the projector or the remote control again to turn off the lamp. The ON indicator blinks orange during lamp cool-down. After about a minute, the fan shuts down and the ON indicator glows orange.

Note: Turning the lamp off does not cut power to the projector. You must move the AC POWER switch to the OFF position to completely turn off the projector.

Projecting the Image

Image Size

The size of the projected image varies according to the distance from the projector to the projection screen and the setting of the zoom lens. The next table shows the minimum and maximum projected image size (measured diagonally) based on the distance from the projector to the screen.

Projection Distance (feet)	Minimum screen size (inches diagonal)	Maximum screen size (inches diagonal)
3 ft (.9 m)	17" (43.1 cm)	27" (68.6 cm)
5 ft (1.5 m)	29" (73.6 cm)	44" (111.7 cm)
10 ft (3.0 m)	57" (144.8 cm)	89" (226.1 cm)
15 ft (4.5 m)	86" (218.4 cm)	133" (337.8 cm)
20 ft (6.0 m)	114" (289.6 cm)	178" (452.1 cm)
25 ft (7.5 m)	143" (363.2 cm)	222" (563.9 cm)
30 ft (9.0 m)	171" (434.3 cm)	267" (678.2 cm)
35 ft (10.5 m)	200" (508 cm)	311" (789.9 cm)
40 ft (12.0 m)	229" (581.7 cm)	356" (904.2 cm)

Downloaded from Projector.com

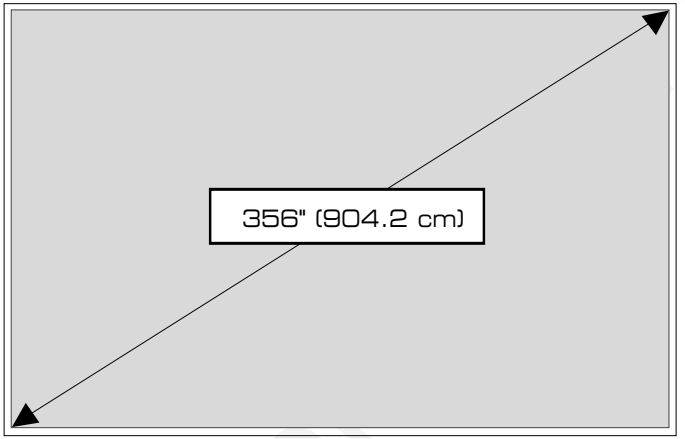

Figure 2-9
Maximum diagonal measurement of projected image when the projector is 40' (12.1 m) from the projection screen

Image Sizing and Focusing

1. Adjust the picture size using the ZOOM buttons on the control panel or remote control. The picture becomes wider by pressing W, and telescopic by pressing T.

   Note: Pressing the BLUE BACK button on the remote control shows a bright blue background so you can clearly see the edges.

2. Adjust the focus using the FOCUS buttons.

   a) Press the FOCUS button. An on-screen display appears.

   b) Using the FOCUS button, adjust the focus so that the image is clear.

3. Turn on the power to all connected equipment.

Keystoning

The normal projected image will have a rectangular shape. Keystoning is when the projected image becomes trapezoidal.

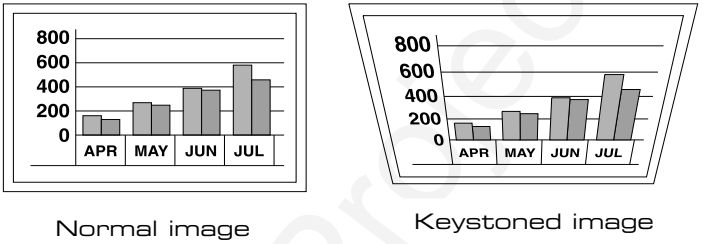

Figure 2-10
Normal vs. keystoned images

Keystoning occurs when the lens of the projector is not perpendicular to the projection screen (the vertical plane) or when it is not parallel to the floor (the horizontal plane). Keystoning also occurs when the projector is tilted sideways.

To correct keystoning, make sure that the projector is at a right angle to the screen in the horizontal plane. The projector is properly aligned if the top and bottom of the projected image are equal in length and parallel to the floor.

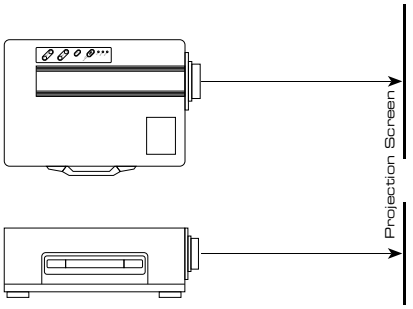

Figure 2-11
Positioning the Desktop Projector

Downloaded from Projector.com

The DP5100 is designed to minimize this effect while projecting images high enough for the entire audience to view. An 8.8° correction for keystoning is built into the projector. Use the adjustable feet to raise and lower the front of the projector.

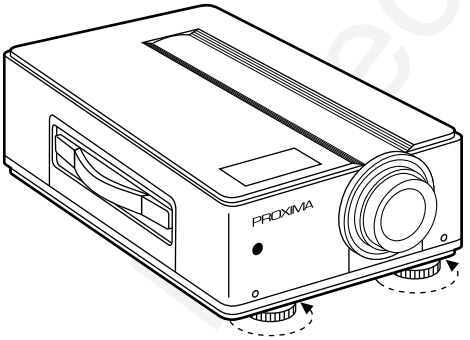

Figure 2-12
Adjusting the keystoning by rotating the feet

Downloaded from Projector.com

Chapter 3

Using the Desktop Projector

This chapter describes each of the keys on the control panel and the remote control. It also explains the various projector settings and how to change them.

Control Panel Keys

The figure in the margin shows the control panel for the DP5100.

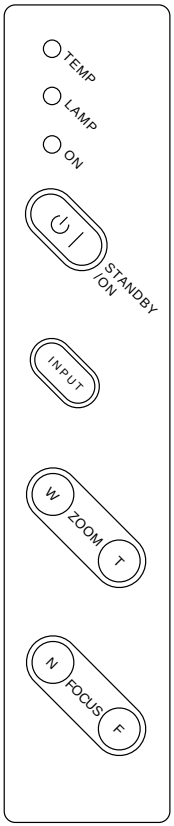

Figure 3-1
The DP5100 control panel

STANDBY/ON Key

The STANDBY/ON key toggles the projection lamp on and off.

- STANDBY - Everything is on except the lamp and the fan.
- ON - The projector is in the projection mode.

INPUT Key

The INPUT key selects the input source. Each time this button is pressed, the input source is changed in sequence as shown below:

VIDEO1 → VIDEO2 → RGB1 → RGB2

ZOOM Key

The ZOOM key adjusts picture size.

- W: Picture becomes wider.
- T: Picture becomes telescopic (smaller).

FOCUS Key

The focus key adjusts the screen focus:

- N: Near
- F: Far

Control Panel Indicators

Three multi-function indicator lights on the projector's control panel indicate the projector's current operating condition.

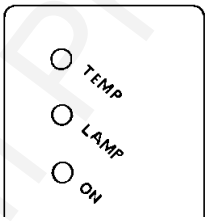

Figure 3-2
Control Panel Indicator lights

TEMP Indicator

The TEMP indicator light glows red in the unlikely event that the projector reaches an over-temperature condition. A thermostat will switch off power to the lamp until the projector cools.

CAUTION! DO NOT TURN OFF THE PROJECTOR! The power must remain on so the fans can cool the projector.

If an overtemperature condition occurs, perform the following checks while the projector cools:

- Verify that the room temperature is below 80° F (27° C).
- Clear the intake grill and exhaust vent of any obstruction.

Downloaded from Projector.com

- Check the filter element. Clean or replace it if necessary. For more information, please refer to *Chapter 4, Maintenance*.

- Check the rear exhaust vent. If the projector has reached an overtemperature condition and the fan is working, you should feel a strong rush of hot air from the vent. If the fan is not working, the projector needs service.

After the projector returns to its normal operating temperature, the TEMP indicator will go out. To turn the lamp back on, first turn the power switch off and on again, then press the STANDBY/ON key on the Control panel.

Note: The remote's STANDBY/ON key won't work after an overtemperature condition until the power ON/OFF switch is cycled and the lamp is turned on from the Control panel.

LAMP Indicator

The LAMP indicator is a two-function display.

- The LAMP indicator blinks red if the air filter is detached.
- The LAMP indicator blinks red if the lamp is defective.

ON Indicator

The ON indicator is a four-function display.

- It glows orange in Standby Mode.
- It blinks green during lamp start-up.
- It glows green during projector operation.
- It blinks orange during lamp cool-down.

Downloaded from Projector.com

Remote Control

The remote control is the primary control for the projector. It contains all the key functions available on the Control Panel, and performs additional functions not available on the Control Panel.

The remote control can be used up to 16 feet from the front of the projector and within 30° to the left and right of the projector.

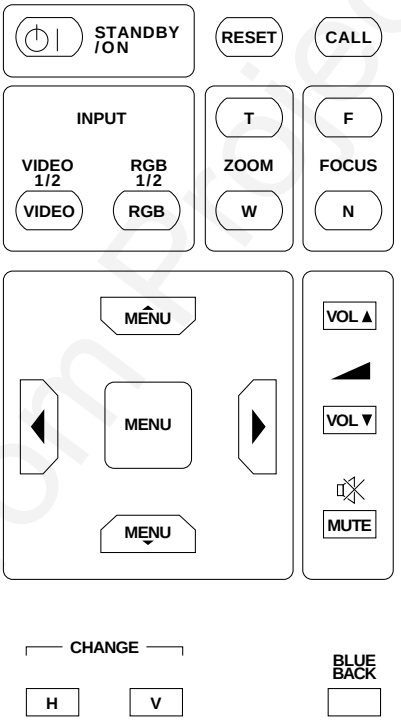

Figure 3-3
Remote control keys

Note: For best results, aim the remote at the projector's front edge. Never obstruct the red infrared receiver eye located on the front of the projector.

Downloaded from Projector.com

STANDBY/ON Key

The STANDBY/ON key toggles the projection lamp on and off.

- STANDBY - everything is on except the lamp and the fan.
- ON - The projector is in the projection mode.

RESET Key

The first time you turn the projector on, the factory settings are in effect.

If you change any of these settings, then want to recall *all* of the factory settings, press the RESET key.

CALL Key

The CALL key overlays a small image that identifies the current input source.

INPUT SELECT Keys

There are two INPUT SELECT keys:

- VIDEO 1/2 allows you to select the video input mode and toggle between the two computer sources.
- RGB 1/2 allows you to select the computer input mode and toggle between the two computer sources.

Downloaded from Projector.com

ZOOM Key

The ZOOM key adjusts picture size.

- W: Picture becomes wider.
- T: Picture becomes telescopic (smaller).

FOCUS Key

The FOCUS key adjusts the screen focus.

- N: Near
- F: Far

MENU Keys

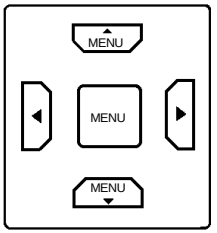

Figure 3-4
Menu keys

These four keys allow you to access and modify the DP5100 settings. Settings are viewed in the Menu Window, which appears in the center of the projected image when your press the MENU up or down keys.

In these menus, the up and down keys select the menu item, and the right and left arrow keys adjust the setting.

Downloaded from Projector.com

VOLUME Keys

The VOLUME keys on the remote control are used to adjust the audio level of the projector's internal speaker. Press the up or down key to increase or decrease the speaker's audio level.

MUTE Key

Use the Mute key to momentarily shut down audio ouput from the DP5100. Pressing MUTE again toggles the sound back on.

CHANGE Keys

The CHANGE keys control the image inversion feature.

- The H key flips the projected image horizontally, for rear projection.
- The V key flips the projected image vertically, for ceiling-mounted projectors.

BLUE BACK Key

The BLUE BACK key turns on and off a bright blue background. This background is helpful during setup, when you are positioning the projected image on the projection screen.

LIGHT Key (on side of remote control)

Press the LIGHT key to use the remote control in a dark place. It illuminates the remote control buttons.

Downloaded from Projector.com

Menus

Pressing the up or down MENU key brings the Menu Window to the center of the projected image. The menus show the current settings for the projector.

Displaying the Menu

Press the up or down MENU key once to display the menu. You use these menus to adjust the projector's image settings. The menus vary depending on the current video source.

Selecting and Changing Settings

To move to and change a setting:

1. Use the up and down menu keys to move to the setting that you wish to change.

2. Use the right and left arrow keys to change the setting.

Note: The active setting (the one that you can change) is displayed in bright green. Inactive settings are indicated in blue.

Saving Changes

Any modifications you make to the projector settings are automatically saved.

Downloaded from Projector.com

RGB (COMPUTER) Menu

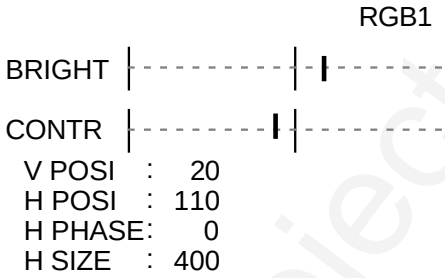

Figure 3-5
Menu for computer video

BRIGHT

The BRIGHT (Brightness) setting increases and decreases the intensity level of the projected image. Press the right arrow key to increase the brightness; press the left arrow key to decrease the brightness.

CONTR

The CONTR (Contrast) setting is used to adjust the contrast in the projected image. Press the right arrow key to increase contrast and the left arrow key to decrease the contrast.

V POSI

The V POSI setting is used to adjust the vertical position of the projected image. Press the right arrow key to move the image up; press the left arrow key to move the image down.

Downloaded from Projector.com

H POSI

The H POSI setting is used to adjust the horizontal position of the projected image. Press the right arrow key to move the image left; the left key moves the image right.

H PHASE

Adjust the H PHASE setting if you see uneven horizontal features, streaks, or shimmering in a computer video image. This setting is similar to a sync (synchronization) adjustment on other products. Press the left or right arrow key until the image stabilizes.

H SIZE

The H SIZE setting adjusts the width of the computer display. This is similar to the frequency adjustment on other products--use it to adjust a jittery or banded image. Press the left or right arrow keys to adjust the image.

Video Menu

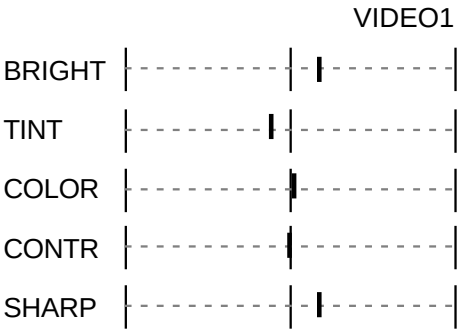

Figure 3-6
Levels menu for NTSC/PAL and S-VHS video

Downloaded from Projector.com

BRIGHT

The BRIGHT (Brightness) setting increases and decreases the intensity level of the projected image. Press the right arrow key to increase the brightness, or the left arrow key to decrease the brightness.

TINT

The TINT setting adjusts the red or green color balance for NTSC/PAL video or S-video sources. Use the left and right arrow keys to adjust the color signal balance.

COLOR

The COLOR setting adjusts the intensity of the colors for NTSC/PAL video or S-video sources. Use the left and right arrow keys to adjust the color intensity.

CONTR

The CONTR (Contrast) setting is used to adjust the contrast in the projected image. Press the right arrow key to increase the contrast and the left arrow key to decrease the contrast.

SHARP

The SHARP setting adjusts the sharpness of NTSC/PAL video or S-video sources. Use the left and right arrow keys to adjust the softness or sharpness of the display.

Downloaded from Projector.com

Chapter 4
Maintenance

There is very little involved with the care and maintenance of your DP5100. However, common sense and periodic maintenance will ensure top performance.

The lamp, lenses, mirrors, and LCD panels have been carefully aligned at the factory to give you the clearest, brightest image possible. However, physical abuse can cause misalignment or damage to the optical elements. Take appropriate care in use and handling.

CAUTION! The DP5100 contains sensitive circuitry and optics. Protect it from potential fluid spills.

Lens Cleaning

From time to time, you'll need to clean the optics on the lens.

1. Take a piece of lens tissue and form it into a loose swab. Wet it with lens cleaning fluid or denatured alcohol and gently move it over the lens surface.

CAUTION! Never use acetone to clean the lens—it can remove the paint from the metal around the lens or the mirror mount, and leave a residue on the glass surface.

2. Take another part of the lens tissue not touched by your bare fingers and repeat the process, going over the lens in another direction.

CAUTION! NEVER look directly into the lens when the lamp is on. The brightness can damage your eyes. To check for smudges, look at the lens from an angle.

3. Repeat steps 1 and 2 until no smudges or particles can be seen when the lens is illuminated by a strong light. If the lens is extremely dirty, it may be necessary to use several pieces of lens tissue. Use water if denatured alcohol is unavailable.

General Maintenance

Replacing the Lamp

1. Turn off the projector.

2. Unplug the projector's power cord from the wall socket and remove the power cord from the projector's power receptacle.

3. Unscrew the screw located on the right side of the rear panel and remove the service door.

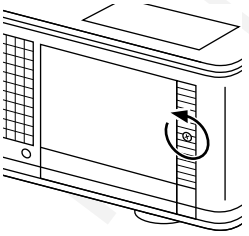

Figure 4-1
Removing the service door

4. Unscrew the two service door retaining screws (they will not come out of the service door).

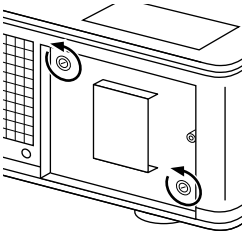

Figure 4-2
Unscrewing the service door retaining screws

Downloaded from Projector.com

CAUTION! The lamp module gets very hot during operation. Use appropriate care when changing lamps. Make sure that the lamp module has cooled for at least 3 to 5 minutes.

5. Grasp the handle located on the rear of the lamp module and firmly pull the lamp module straight out.

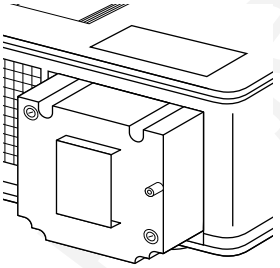

Figure 4-3
Removing the lamp module

6. Replace the old lamp module with a new lamp module, carefully aligning the power pins on the bottom and pressing firmly into place. When it is properly placed, a small alignment mark etched on the projector chassis will be visible below the lamp module.

7. Screw the two lamp module retaining screws down flush.

8. Replace the service door and screw it into place.

9. Replace the power cord.

Cleaning the Air Filter

You should change or clean the air intake filter after every 100 operating hours to maintain proper cooling. This filter is located on the bottom of the projector, under the grill.

Downloaded from Projector.com

1. Disconnect all cables/cords from the projector.

2. Set the projector on its side, connector panel down.

3. Remove both screws on the filter cover.

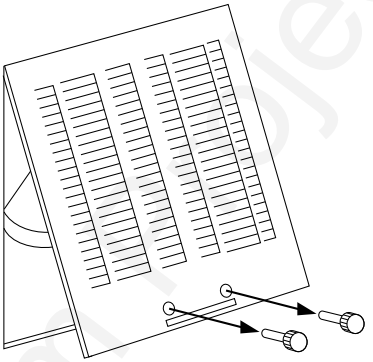

Figure 4-4
Removing the screws on the air filter cover

4. Press up on the air filter cover tab to release the cover latch as you pull the grill assembly out (see Figure 4-5).

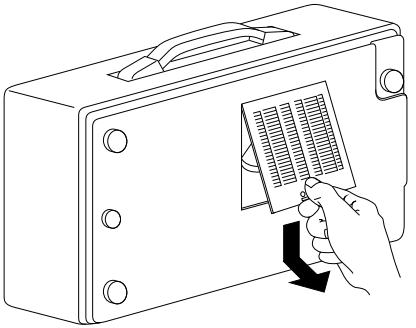

Figure 4-5
Removing the air intake filter grill

Downloaded from Projector.com

5. Clean the air filter using a vacuum cleaner after you have disassembled it. If dirt is still present, wipe the air filter with a cloth moistened with water, then wipe it with a dry cloth.

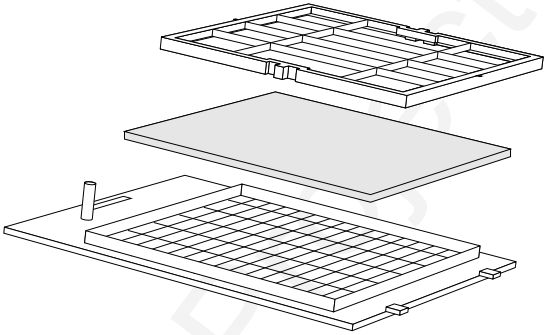

Figure 4-6
The components of the air filter

6. Reassemble and re-install the air filter.

Changing the Remote Control's Batteries

To install or change the two AA alkaline batteries in the remote control unit:

1. Locate the battery compartment at the lower rear of the case. Slide the cover off of the battery compartment.

Downloaded from Fuston.com

2. Remove the old batteries and replace them with new ones. Align the batteries in the proper direction.

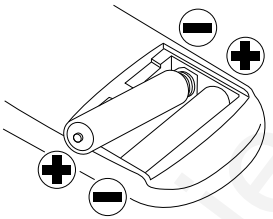

Figure 4-7
Installing batteries

3. Replace the cover on the battery compartment.

Temperature Extremes

The projector should not be stored in excess of 140° F (60° C). The ideal operating temperature is below 80° F (27°C).

If the projector has been exposed to extremely low temperatures, allow it to warm up before you use it.

Downloaded from Projector.com

Chapter 5

Troubleshooting

Problem	Likely Cause	Possible Solution(s)
No image projected at all	No power to projector	Turn power ON Check AC cord Check power to electrical outlet
	Lamp not on	Turn lamp ON
	OVERTEMP indication	Allow projector to cool; turn projector OFF, then ON
No video image projected	Video source(s)	Check video source(s) (composite or S-VHS) for power ON and proper operation
	Loose/improper cabling	Check and secure cabling between video source(s) and projector
	Laptop external video port not turned on	Refer to your Laptop documentation
No computer image projected	Loose cable	Check and secure cable connections
	No power to computer	Turn on computer
	Input source selection is incorrect	Select the correct input
LAMP indicator glowing red	Burned out lamp	Replace lamp
Displayed image not square (keystoned)	Projector not placed at proper angle to projection screen	Adjust relative positions of projector and screen
	Projector not horizontal	Level projector
Projected image out of focus	Projection lens not focused	Adjust projection lens focus
Projected image larger than screen	Zoom lens not adjusted properly	Adjust the zoom lens
Projected image smaller than screen	Zoom lens not adjusted properly	Adjust the zoom lens
Image off-center	H or V POSI adjusted incorrectly	Adjust H and/or V POSI; if image will not center, check for compatibility problems
	Compatibility problems	Verify projector is image compatible with one of the standards listed in *Appendix A: Specifications*
	Misalignment or damage to optical elements	Projector requires servicing

Problem	Likely Cause	Possible Solution(s)
Streaks on monitor	Video cable plugged into computer is upside-down	Check and re-set cable connections
Faint screen	Low intensity	Adjust BRIGHT (brightness) and CONTR (contrast) settings
Jittery, fuzzy letters	Out of sync	Adjust H PHASE setting
Cannot get entire image on screen; scrambled image	Compatibility problems	Verify projector is image compatible with one of the standards listed in Appendix A
"Shimmering" colors	H PHASE or BRIGHT setting out of adjustment	Adjust H PHASE or BRIGHT (brightness) settings
Colors weak in video mode (NTSC, PAL, or S-VHS)	Weak video signal	Check for faulty video source, bad connection, or frayed cable
	COLOR setting may be too low	Adjust COLOR setting
Getting excess white or washout in TV video mode (NTSC, PAL, or S-VHS)	CONTRAST setting is too high	Adjust CONTR (contrast) setting, then adjust BRIGHT (brightness) setting
No audio	Audio source(s)	Check audio source(s) for power ON and proper operation
	Loose, improper cabling	Check and secure cabling between audio source(s) and projector
TEMP indication	Air vent(s) clogged	Allow projector to cool; clear obstructions from vents Clean and replace filters as necessary
	Internal fan failure	Allow projector to cool Check for fan and blower operation; service if necessary
Remote Control doesn't work	Batteries upside-down or old	Check battery placement or replace with new batteries
	Projector's IR receiver window blocked	Remove object obstructing red IR receiver on front of projector
	Out of range	Move within 16' and within a 30° angle from the front on the projector.

Downloaded from Projector.com

Where to Get Help

If you need help:

1. Check the Troubleshooting Chart.

2. Call your dealer's technical support line and explain your problem.

3. Call Proxima at:

   U.S.A. and Canada:
   (619) 457–5500
   Press **1** for Customer Service.
   (619) 457-8542 (Fax)

   Outside U.S.A. and Canada:
   (619) 457–5500
   Press **1** for Customer Service.
   (619) 622-0173 (Fax)

   Europe:
   +31-43-358 5200
   +31-43-358 5201 (Fax)

Downloaded from Projector.com

Returns

If the Desktop Projector or any of its accessories are determined to be defective:

1. Contact Proxima Customer Service to request a Return Material Authorization (RMA) number.

2. Send the defective unit with the RMA number clearly marked on the outside of the shipping box, freight prepaid, to:

   U.S.A. and Canada:
   Proxima Corporation
   RMA # _____
   9440 Carroll Park Drive
   San Diego, CA 92121

   Europe:
   Proxima Corporation
   RMA # _____
   Horsterweg 24
   6191 RX Beek
   The Netherlands

3. Pack the projector in its original box for safe shipment. If you no longer have the original shipping materials, contact Proxima Customer Service for packaging.

Downloaded from Projector.com

Appendix A

Specifications

Proxima Desktop Projector 5100

Projector Type	Portable Multimedia Projector
Computer Compatibility	PC compatibles (VGA, VESA 640 x 480 @ 72 Hz) Apple Macintosh II, Quadra, Centris, Performa, PowerBook, and Power Macintosh
Video Compatibility	NTSC, PAL
Connectors	RGB: Two DB-15s (VGA connectors) Video: Two female RCA composites Two 4-pin Mini DIN S-Video (Y/C) One BNC connector Audio: Two sets of female RCA jacks for COMPUTER AUDIO IN Two female RCA jacks for VIDEO AUDIO IN
LCD Panels	3 polysilicon active-matrix TFT (Thin-Film Transistor)
Resolution	640 x 480 pixels
Number of Colors	16.7 million colors
Response Time	30 - 50 milliseconds (typical)
Contrast Ratio	200:1 (typical)
Brightness	300 ANSI lumens
Lamp	250 watt metal-halide
Dimensions	12.6" W x 18.2" L x 6.7" H 32.0 cm W x 46.1 cm L x 16.9 cm H
Weight	23.1 lbs (10.5 kg)
Projection Distance	3' (1 m) to infinity (limited only by ambient light)
Screen Image Size	35" (88.9 cm) to unlimited diagonal
Lens	F3.0–3.8 (46.5–74.4 mm), 1:1.6 power zoom, power focus
Keystone Correction	Normal at +8.8° projection angle
Audio	Single speaker, top facing 3 watt amplifier Four sets of stereo inputs (Audio follows video): RGB (COMPUTER) AUDIO IN – 2 sets AUDIO IN (for video sources) – 2 sets *Note: COMPUTER (RGB) AUDIO IN and AUDIO IN may be used as microphone inputs w/th line level signals*
Power Requirements	100-30 VAC, 50/60 Hz
Storage Temp.	-4° F to 140° F (-20° C to 60° C)
Humidity Tolerance	10% to 85% non-condensing
Approvals	FCC Class A, Cul, UL
Warranty	One year parts and labor. No warranty on lamp.

Appendix B

Accessories & Replacement Parts

Proxima Desktop Projector 5100

Accessory	Description	Part No.
Desktop Projector™ Soft Carrying Case	Accomodates the DP5100 and accessories	A296
Desktop Projector Hard Carrying Case	Accomodates the DP5100 and accessories	A295
Interface Kit	Connects Mac SE or SE/30 to Desktop Projector	A33
Interface Kit	Connects Mac Classic to Desktop Projector	A35
RCA Cable	Male RCA connects DP5100 to male RCA video source	C400-6
BNC to RCA Cable	Connects Desktop Projector to a video source w/ a BNC connector	C468-6
Computer-grade Surge Protector	Protects projector and other attached equipment from power surges and spikes. North America use only. Comes with $10,000 equipment guarantee.	S100
Distribution Amplifier (VGA)	Connects both the projector and the monitor to the computer (VGA)	A51-1 (120V) A51-2 (220V)
Distribution Amplifier (Macintosh)	Connects both the projector and the monitor to the Macintosh	A51-3 (120V) A51-4 (220V)

Replacement Parts	Part No.
Air Filter	260-00028
VGA Video Cable	900-95006
Macintosh Video Cable Adaptor	900-95101
Composite Video/Audio Cable	900-94908
Metal Halide Lamp	160-00072
Power Cord: British	?
Power Cord: European	?
Power Cord: Italian	?
Power Cord: North American	901-01510
Lens Cap	280-00009
Remote Control	080-00714-1

You can order accessories and replacement parts through your local dealer or by contacting Proxima at the following numbers:

U.S.A. and Canada:
(619) 457–5500
Press **1** for Customer Service.
(619) 457–8542 (Fax)

Outside U.S.A. and Canada:
(619) 457–5500
Press **1** for Customer Service.
(619) 622–0173 (Fax)

Europe:
+31-43-650 248
+31-43-649 220 (Fax)

Downloaded from Projector.com

Index

A

adjusting the image 3-9
  brightness 3-9
  color 3-11
  contrast 3-9
  H-POSI 3-10
  streaks and shimmering 3-10
  sharpness 3-11
  tint 3-11
  V-POSI 3-9
accessories B-1
air filter 4-3
applying power to the projector 2-10
arrow keys, remote control 3-6
audio
  connecting from VCR or laserdisc 2-8
  connecting from computer 2-6
  connecting to a microphone 2-9

B

batteries, remote control 4-6
BLUE BACK key 3-7
brightness, adjusting 3-9
BRIGHTNESS setting 3-9, 3-10

C

CALL key 3-5
CHANGE key 3-7
Changing
  air filters 4-3
  batteries 4-6
  lamps 4-2
cleaning
  air filter 4-3
  lens 4-1
color, adjusting 3-11
COLOR setting 3-11
Connector panel 2-3
connecting hardware
  desktop computers 2-4
  laptop computers 2-5
  microphones 2-9
  notebook computers 2-5
connecting audio
  from computer 2-6
  from VCR or laserdisc 2-8
connecting video from VCR 2-6
CONTRAST setting 3-11
Control panel 3-1

D

Desktop Projector
  components 1-2
  positioning 2-2, 2-13
  projection distance 2-11
  turning on 2-10

E

external speakers 2-9
external stereo system 2-9

F

FOCUS key 2-12, 3-2, 3-6
focusing the image 2-12

H

horizontal image adjustment 3-10
H PHASE setting 3-10
H POSI setting 3-10

I

INPUT key 3-1
INPUT SELECT key 3-5
image size 2-11

K

keys
- ARROW keys (MENU) 3-6
- BLUE BACK key 3-7
- CALL key 3-5
- CHANGE key 3-7
- FOCUS key 3-6
- INPUT key 3-1
- INPUT SELECT key 3-5
- LIGHT key 3-7
- MENU keys 3-6
- MUTE key 3-7
- RESET key 3-5
- STANDBY/ON key 3-1
- VOLUME keys 3-7
- ZOOM key 3-1, 3-6

Keystoning 2-13

L

LAMP light 3-3
lamp
- replacing 4-2
- turning on 2-10

laptop computers 2-5
laserdisc, connecting video from 2-6
lens 4-1
LIGHT key 3-7
lights (indicator)
- TEMP 3-2
- LAMP 3-3
- ON 3-3

M

Macintosh video cable adaptor 1-2, 2-4
MENU key 3-6
menus
- COMPUTER (RGB) video menu 3-9
- changing settings on 3-8
- saving changes on 3-8
- Video menu 3-10

microphone 2-9
MUTE key 3-7

N

notebook computers 2-5

O

ON light 3-3
OVERTEMP light 3-2

Downloaded from Projector.com

P

ports, input and output 2-3
positioning the projector 2-2
problems 5-1
  laptops 2-5
  overheating 2-5
projector, *see* Desktop Projector
PowerBooks 2-6

R

remote control 3-4
RESET key 3-5
replacement parts B-2
replacing
  batteries 4-6
  lamp 4-2
  filter 4-3

S

S-VHS 2-7
setting up the projector 2-4, 2-5
SHARP setting 3-11
speakers, external 2-9
specifications A-1
STANDBY/ON key 2-10, 3-5
streaks on the image (H PHASE) 3-10

T

Technical Support 5-3
TEMP light 3-2
tint, adjusting 3-10
TINT setting 3-11
troubleshooting 5-1
turning the lamp on/off 2-10

V

VCRs
  connecting audio from 2-8
  connecting video from 2-6
vertical image adjustment 3-9
VGA video cable 1-2, 2-4
video
  connecting from the computer 2-4, 2-5
  connecting from VCR/laserdisc 2-6
volume, adjusting 3-7
VOLUME keys 3-7
V POSI setting 3-9

W

warning lights 3-2

Z

ZOOM key 3-1, 3-6

Downloaded from Projector.com