myprojectorlamps.com

The most trusted, dependable name in projector lamp sales.

http://www.myprojectorlamps.com

http://www.myprojectorlamps.ca

http://www.myprojectorlamps.eu

The following projector manual has not been modified or altered in any way.

Panasonic®

Operating Instructions

LCD Projector Commercial Use

Model No. **PT-F100NTE**
PT-F100E

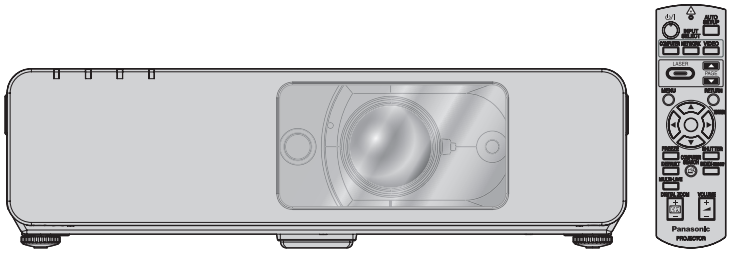

Before operating this product, please read the instructions carefully and save this manual for future use.

TQBJ0214

ENGLISH

Important Safety Notice

Dear Panasonic Customer:

This instruction booklet provides all the necessary operating information that you might require. We hope it will help you to get the most out of your new product, and that you will be pleased with your Panasonic LCD projector. The serial number of your product may be found on its bottom. You should note it in the space provided below and retain this booklet in case service is required.

Model number: **PT-F100NTE / PT-F100E**

Serial number:

WARNING: THIS APPARATUS MUST BE EARTHED.

WARNING: **To prevent damage which may result in fire or shock hazard, do not expose this appliance to rain or moisture.**

Machine Noise Information Ordinance 3. GSGV, January 18, 1991: The sound pressure level at the operator position is equal or less than 70 dB (A) according to ISO 7779.

WARNING:

1. Remove the plug from the mains socket when this unit is not in use for a prolonged period of time.
2. To prevent electric shock, do not remove cover. No user serviceable parts inside. Refer servicing to qualified service personnel.
3. Do not remove the earthing pin on the mains plug. This apparatus is equipped with a three prong earthing-type mains plug. This plug will only fit an earthing-type mains socket. This is a safety feature. If you are unable to insert the plug into the mains socket, contact an electrician. Do not defeat the purpose of the earthing plug.

CAUTION: To assure continued compliance, follow the attached installation instructions, which includes using the provided power cord and shielded interface cables when connecting to computer or peripheral device. If you use serial port to connect PC for external control of projector, you must use optional RS-232C serial interface cable with ferrite core. Any unauthorized changes or modifications to this equipment will void the user's authority to operate.

Indication based on the German law "Geräte- und Produktsicherheitsgesetz"
Directive 2001/95/EC (Article 5);
Panasonic Marketing Europe GmbH
Hagenauer Str. 43 65203 Wiesbaden F.R.GERMANY

Information on Disposal for Users of Waste Electrical & Electronic Equipment (private households)

This symbol on the products and/or accompanying documents means that used electrical and electronic products should not be mixed with general household waste.
For proper treatment, recovery and recycling, please take these products to designated collection points, where they will be accepted on a free of charge basis. Alternatively, in some countries you may be able to return your products to your local retailer upon the purchase of an equivalent new product. Disposing of this product correctly will help to save valuable resources and prevent any potential negative effects on human health and the environment which could otherwise arise from inappropriate waste handling. Please contact your local authority for further details of your nearest designated collection point. Penalties may be applicable for incorrect disposal of this waste, in accordance with national legislation.

For business users in the European Union

If you wish to discard electrical and electronic equipment, please contact your dealer or supplier for further information.

Information on Disposal in other Countries outside the European Union

This symbol is only valid in the European Union.
If you wish to discard this product, please contact your local authorities or dealer and ask for the correct method of disposal.

Declaration of Conformity

Declaration of Conformity (DoC)
This equipment is in compliance with the essential requirements and other relevant provisions of Directive 1999/5/EC.

Customers can download a copy of the original DoC for this product from our DoC server: http://www.doc.panasonic.de

Contact in the EU: Panasonic Services Europe, a Division of Panasonic Marketing Europe GmbH, Panasonic Testing Centre, Winsbergring 15, 22525 Hamburg, F.R.Germany

This product is intended to be used in the following countries.

Austria, Belgium, Bulgaria, Czech, Cyprus, Denmark, Estonia, Finland, France, Germany, Greece, Hungary, Iceland, Ireland, Italy, Latvia, Lithuania, Luxembourg, Malta, Netherlands, Norway, Poland, Portugal, Romania, Slovenia, Slovak, Spain, Sweden, Switzerland & UK

Konformitätserklärung (KE)
Dieses Gerät entspricht den grundlegenden Anforderungen und den weiteren entsprechenden Vorgaben der Richtlinie 1999/5/EU.

Kunden können eine Kopie der Original-KE für dieses Produkt von unserem KE-Server herunterladen: http://www.doc.panasonic.de

Kontaktadresse in der EG: Panasonic Services Europe, a Division of Panasonic Marketing Europe GmbH, Panasonic Testing Centre, Winsbergring 15, 22525 Hamburg, F.R.Germany

Dieses Produkt ist für den Einsatz in den folgenden Ländern vorgesehen.

Österreich, Belgien, Bulgarien, Tschechische Republik, Zypern, Dänemark, Estland, Finnland, Frankreich, Deutschland, Griechenland, Ungarn, Island, Irland, Italien, Lettland, Litauen, Luxemburg, Malta, Niederlande, Norwegen, Polen, Portugal, Rumänien, Slowenien, Slowakei, Spanien, Schweden, Schweiz und Großbritannien

Déclaration de Conformité (DC)
Cet appareil est conforme aux exigences essentielles et aux autres dispositions pertinentes de la Directive 1999/5/EC.

Les clients peuvent télécharger une copie de la DC originale pour ce produit à partir de notre serveur DC: http://www.doc.panasonic.de

Coordonnées dans l'UE : Panasonic Services Europe, a Division of Panasonic Marketing Europe GmbH, Panasonic Testing Centre, Winsbergring 15, 22525 Hamburg, F.R.Germany

Ce produit est conçu pour l'utilisation dans les pays suivants.

Autriche, Belgique, Bulgarie, République Tchéquie, Chypre, Danemark, Estonie, Finlande, France, Allemagne, Grèce, Hongrie, Islande, Irlande, Italie, Lettonie, Lituanie, Luxembourg, Malte, Pays-Bas, Norvège, Pologne, Portugal, Roumanie, Slovénie, Slovaquie, Espagne, Suède, Suisse et Royaume-Uni

Declaración de conformidad (DC)
Este equipo cumple con los requisitos esenciales asi como con otras disposiciones de la Directiva 1999/5/CE.

El cliente puede descargar una copia de la DC original de este producto desde nuestro servidor DC: http://www.doc.panasonic.de

Contacto en la U.E.: Panasonic Services Europe, a Division of Panasonic Marketing Europe GmbH, Panasonic Testing Centre, Winsbergring 15, 22525 Hamburg, F.R.Germany

Este producto ha sido desarrollado para el uso en los siguientes países.

Austria, Bélgica, Bulgaria, República Checa, Chipre, Dinamarca, Estonia, Finlandia, Francia, Alemania, Grecia, Hungría, Islandia, Irlanda, Italia, Letonia, Lituania, Luxemburgo, Malta, Holanda, Noruega, Polonia, Portugal, Rumania, Eslovenia, Eslovaquia, España, Suecia, Suiza y el Reino Unido

Dichiarazione di conformità (DoC)
Questo apparato é conforme ai requisiti essenziali ed agli altri principi sanciti dalla Direttiva 1999/5/CE.

I clienti possono scaricare la copia del DoC originale per questo prodotto dal nostro server DoC: http://www.doc.panasonic.de

Contatto nella EU: Panasonic Services Europe, a Division of Panasonic Marketing Europe GmbH, Panasonic Testing Centre, Winsbergring 15, 22525 Hamburg, F.R.Germany

I prodotti sono stati prodotti per l'uso nei seguenti paesi.

Austria, Belgio, Bulgaria, Repubblica Ceca, Cipro, Danimarca, Estonia, Finlandia, Francia, Germania, Grecia, Irlanda, Islanda, Italia, Lettonia, Lituania, Lussembugo, Malta, Olanda, Norvegia, Polonia, Portogallo, Romania, Regno Unito, Slovenia, Slovacchia, Spagna, Svezia, Svizzera, Ungheria

България
Това устройство отговаря на съществените изисквания и останалите приложими разпоредби на Директива 1999/5/ЕО.

Česky
Toto zařízení je v souladu se základními požadavky a ostatními odpovídajícími ustanoveními Směrnice 1999/5/EC.

Dansk
Dette udstyr er i overensstemmelse med de væsentlige krav og andre relevante bestemmelser i Direktiv 1999/5/EF.

Eesti
See seade vastab direktiivi 1999/5/EÜ olulistele nõuetele ja teistele asjakohastele sätetele.

Ελληνική
Αυτός ο εξοπλισμός είναι σε συμμόρφωση με τις ουσιώδεις απαιτήσεις και άλλες σχετικές διατάξεις της Οδηγίας 1999/5/EC.

Íslenska
Þetta tæki er samkvæmt grunnkröfum og öðrum viðeigandi ákvæðum Tilskipunar 1999/5/EC.

Latviski
Šī iekārta atbilst Direktīvas 1999/5/EK būtiskajām prasībām un citiem ar to saistītajiem noteikumiem.

Lietuvių
Šis įrenginys tenkina 1999/5/EB Direktyvos esminius reikalavimus ir kitas šios direktyvos nuostatas.

Nederlands
Dit apparaat voldoet aan de essentiele eisen en andere van toepassing zijnde bepalingen van de Richtlijn 1999/5/EC.

Malti
Dan l-apparat huwa konformi mal-ħtiġiet essenzjali u l-provedimenti l-oħra rilevanti tad-Direttiva 1999/5/EC.

Magyar
Ez a készülék teljesíti az alapvető követelményeket és más 1999/5/EK irányelvben meghatározott vonatkozó rendelkezéseket.

Norsk
Dette utstyret er i samsvar med de grunnleggende krav og andre relevante bestemmelser i EU-direktiv 1999/5/EF.

Polski
Urządzenie jest zgodne z ogólnymi wymaganiami oraz szczególnymi warunkami określonymi Dyrektyvą UE: 1999/5/EC.

Português
Este equipamento está em conformidade com os requisitos essenciais e outras provisões relevantes da Directiva 1999/5/EC.

România
Acest echipament este conform cu cerințele de bază şi celelalte prevederi relevante ale Directivei 1999/5/CE.

Slovensko
Ta naprava je skladna z bistvenimi zahtevami in ostalimi relevantnimi pogoji Direktive 1999/5/EC.

Slovensky
Toto zariadenie je v zhode so základnými poiadavkami a inými príslušnými nariadeniami direktív: 1999/5/EC.

Suomi
Tämä laite täyttää direktiivin 1999/5/EY olennaiset vaatimukset ja on siinä asetettujen muiden laitetta koskevien määräysten mukainen.

Svenska
Denna utrustning är i överensstämmelse med de väsentliga kraven och andra relevanta bestämmelser i Direktiv 1999/5/EC.

Contents

Quick steps

1. Set up your projector
See “Setting up” on page 16.

2. Connect with other devices
See “Connections” on page 20.

3. Prepare the Remote control
See “Remote control” on page 13.

4. Start projecting
See “Switching the projector on/off” on page 22.

5. Adjust the image
See “Menu Navigation” on page 29.

- **When you start the projection for the first time, the minimum required setting screen for projection will be displayed.**
  See “Minimum required setting screen” on page 12.

Important Information

Important Safety Notice 2
Declaration of Conformity 4
Precautions with regard to safety 8
WARNINGS 8
CAUTIONS 9
Cautions when transporting 10
Cautions when installing 10
Cautions on use 11
Accessories 11

Preparation

Read this first 12
Minimum required setting screen 12
About Your Projector 13
Remote control 13
Projector body 14

Getting Started

Setting up 16
Screen size and throw distance 16
Projection method 17
Front leg adjusters and throwing angle 17
Lens shift and positioning 18
Connections 20
Before connection to the projector 20
Connecting with computers 20
Connecting with AV equipment 21

Basic Operation

Switching the projector on/off 22
Mains lead 22
POWER indicator 22
Switching on the projector 23
Switching off the projector 23
Projecting an image 24
Selecting the input signal 24
Positioning the image 24
Remote control operation 25
Operating range 25
Setting up the image position automatically 25
Switching the input signal 26
Using the laser pointer 26
Capturing an image 27
Stopping the projection temporary 27
Resetting to the factory default settings 27
Projecting an image in INDEX-WINDOW mode 27
Enlarging the centred area 28
Controlling the volume of the speaker 28

Settings

Menu Navigation **29**
Navigating through the MENU 29
Main menu and Sub-menu 30
PICTURE menu **32**
PICTURE MODE 32
CONTRAST 32
BRIGHTNESS 32
COLOUR 32
TINT 32
SHARPNESS 32
COLOUR TEMPERATURE 32
DAYLIGHT VIEW 32
DETAILED SETUP 33
POSITION menu **34**
KEYSTONE 34
POSITION 34
DOT CLOCK 34
CLOCK PHASE 34
ASPECT 34
RESIZING 35
FRAME LOCK 35
OPTION menu **36**
INPUT GUIDE 36
STARTUP LOGO 36
COMPUTER2 SELECT 36
LAMP RUNTIME 36
FILTER REMAINING 37
POWER OFF TIMER 37
DIRECT POWER ON 37
CONTROL PANEL 37
AUTO SETUP 37
SIGNAL SEARCH 37
INSTALLATION 37
HIGHLAND 38
TEST PATTERN 38
DETAILED SETUP 38
SECURITY menu **39**
INPUT PASSWORD 39
PASSWORD CHANGE 39
TEXT DISPLAY 39
TEXT CHANGE 39
NETWORK menu **40**
Items in NETWORK menu 40

Maintenance

TEMP, LAMP and FILTER Indicators **41**
Managing the indicated problems 41
Care and Replacement **42**
Cleaning the projector 42
Replacing the ARF (Auto Rolling Filter) 42
Replacing the Lamp unit 43
Ceiling mount bracket safeguards 44
Troubleshooting **45**

Appendix

Technical Information **46**
List of compatible signals 46
Serial terminal 47
Computer connection guidance 48
REMOTE terminal 49
Specifications 50
Screen size and throw distance for 16:9 aspect ratio 52
Dimensions 53
Trademark acknowledgements 53
Index **54**

Precautions with regard to safety

WARNINGS

If you notice smoke, strange smells or noise coming from the projector, disconnect the mains plug from the mains socket.
- Do not continue to use the projector in such cases, otherwise fire or electric shocks could result.
- Check that no more smoke is coming out, and then contact an Authorised Service Centre for repairs.
- Do not attempt to repair the projector yourself, as this can be dangerous.

Do not install this projector in a place which is not strong enough to take the full weight of the projector.
- If the installation location is not strong enough, it may fall down or tip over, and severe injury or damage could result.

Installation work (such as ceiling suspension) should only be carried out by a qualified technician.
- If installation is not carried out correctly, there is the danger that injury or electric shocks may occur.
- Do not use other than an authorised ceiling mount bracket.

If foreign objects or water get inside the projector, or if the projector is dropped or the cabinet is broken, disconnect the mains plug from the mains socket.
- Continued use of the projector in this condition may result in fire or electric shocks.
- Contact an Authorised Service Centre for repairs.

Do not overload the mains socket.
- If the power supply is overloaded (for example, by using too many adapters), overheating may occur and fire may result.

Never attempt to modify or disassemble the projector.
- High voltages can cause fire or electric shocks.
- For any inspection, adjustment and repair work, please contact an Authorised Service Centre.

Clean the mains plug regularly to prevent it from becoming covered in dust.
- If dust builds up on the mains plug, the resulting humidity can damage the insulation, which could result in fire. Pull the mains plug out from the mains socket and wipe it with a dry cloth.
- If not using the projector for an extended period of time, pull the mains plug out from the mains socket.

Do not handle the mains plug with wet hands.
- Failure to observe this may result in electric shocks.

Insert the mains plug securely into the mains socket.
- If the plug is not inserted correctly, electric shocks or overheating could result.
- Do not use plugs which are damaged or mains sockets which are coming loose from the wall.

Do not place the projector on top of surfaces which are unstable.
- If the projector is placed on top of a surface which is sloped or unstable, it may fall down or tip over, and injury or damage could result.

Do not place the projector into water or let it become wet.
- Failure to observe this may result in fire or electric shocks.

Do not do anything that might damage the mains lead or the mains plug.
- Do not damage the mains lead, make any modifications to it, place it near any hot objects, bend it excessively, twist it, pull it, place heavy objects on top of it or wrap it into a bundle.
- If the mains lead is used while damaged, electric shocks, short-circuits or fire may result.
- Ask an Authorised Service Centre to carry out any repairs to the mains lead that might be necessary.

Do not place the projector on soft materials such as carpets or sponge mats.
- Doing so may cause the projector to overheat, which can cause burns, fire or damage to the projector.

Do not place liquid containers on top of the projector.
- If water spills onto the projector or gets inside it, fire or electric shocks could result.
- If any water gets inside the projector, contact an Authorised Service Centre.

Do not insert any foreign objects into the projector.
- Do not insert any metal objects or flammable objects into the projector or drop them onto the projector, as doing so can result in fire or electric shocks.

Do not allow the + and - terminals of the batteries to come into contact with metallic objects such as necklaces or hairpins.
- Failure to observe this may cause the batteries to leak, overheat, explode or catch fire.
- Store the batteries in a plastic bag and keep them away from metallic objects.

Do not touch the leaked liquid from the batteries.
- If you touch the leaked liquid, it may hurt your skin. Immediately wash away the liquid with water and seek medical advice.
- If you get the leaked liquid in your eye, it may cause blindness or damage. Never rub your eye, and immediately wash away the liquid with water and seek medical advice.

During a thunderstorm, do not touch the projector or the cable.
- Electric shocks can result.

Do not use the projector in a bath or shower.
- Fire or electric shocks can result.

Do not place your skin into the light beam while the projector is being used.
- Strong light is emitted from the projector's lens. If you place directly into this light, it can hurt or damage your skin.

Do not look into the lens while the projector is being used.
- Strong light is emitted from the projector's lens. If you look directly into this light, it can hurt and damage your eyes.
- Be especially careful not to let young children look into the lens. In addition, turn off the power and disconnect the mains plug when you are away from the projector.

Do not place your hands or other objects close to the air outlet port.
- Heated air comes out of the air outlet port. Do not place your hands or face, or objects which cannot withstand heat close to this port [allow at least 50 cm (20") of space], otherwise burns or damage could result.

Replacement of the lamp is recommended to be carried out by a qualified technician.
- The lamp has high internal pressure. If improperly handled, explosion might result.
- The lamp can easily become damaged if struck against hard objects or dropped, and injury or malfunctions may result.

When replacing the lamp, allow it to cool for at least one hour before handling it.
- The lamp cover gets very hot, and touching it can cause burns.

Before replacing the lamp, be sure to disconnect the mains plug from the mains socket.
- Electric shocks or explosions can result if this is not done.

Do not allow infants or pets to touch the remote control unit.
- Keep the remote control unit out of the reach of infants and pets after using it.

CAUTIONS

Do not cover the air inlet port or the air outlet port.
- Doing so may cause the projector to overheat, which can cause fire or damage to the projector.
- Do not place the projector in narrow, badly ventilated places such as closets or bookshelves.
- Do not place the projector on cloth or papers, as these materials could be drawn into the air inlet port.

Do not set up the projector in humid or dusty places or in places where the projector may come into contact with oily smoke or steam.
- Using the projector under such conditions may result in fire, electric shocks or plastic deterioration. The plastic deterioration may cause the falling down of the projector which is mounted in the ceiling.

Do not set up the projector in a high temperature environment, such as near a heater or in direct sunlight.
- Failure to observe this may result in fire, malfunction or plastic deterioration.

When disconnecting the mains lead, hold the plug, not the lead.
- If the mains lead itself is pulled, the lead will become damaged, and fire, short-circuits or serious electric shocks may result.

Always disconnect all cables before moving the projector.
- Moving the projector with cables still attached can damage the cables, which could cause fire or electric shocks to occur.

Do not place any heavy objects on top of the projector.
- Failure to observe this may cause the projector to become unbalanced and fall, which could result in damage or injury.

Do not short-circuit, heat or disassemble the batteries or place them into water or fire.
- Failure to observe this may cause the batteries to overheat, leak, explode or catch fire, and burns or other injury may result.

When inserting the batteries, make sure the polarities (+ and -) are correct.
- If the batteries are inserted incorrectly, they may explode or leak, and fire, injury or contamination of the battery compartment and surrounding area may result.

Use only the specified batteries.
- If incorrect or different kind of batteries are used, they may explode or leak, and fire, injury or contamination of the battery compartment and surrounding area may result.

Precautions with regard to safety

Do not mix old and new batteries.
- If the batteries are inserted incorrectly, they may explode or leak, and fire, injury or contamination of the battery compartment and surrounding area may result.

Remove the used batteries from the remote control promptly.
- If you leave used batteries in the remote control for an extended period of time, it may cause liquid leaking, abnormal internal temperature rising or explosion.

If not using the projector for an extended period of time, disconnect the mains plug from the mains socket and remove the batteries from the remote control.
- If dust builds up on the mains plug, the resulting humidity may damage the insulation, which could result in fire.
- Keeping or leaving the remote control with batteries inside may cause insulation deterioration, electrical leakage or explosion which could result in fire.

Do not put your weight on this projector.
- You could fall or the projector could break, and injury may result.
- Be especially careful not to let young children stand or sit on the projector.

Disconnect the mains plug from the mains socket as a safety precaution before carrying out any cleaning.
- Electric shocks can result if this is not done.

If the lamp has broken, ventilate the room immediately. Do not touch or bring your face close to the broken pieces.
- Failure to observe this may cause the user to absorb the gas which was released when the lamp broke and which contains nearly the same amount of mercury as fluorescent lamps, and the broken pieces may cause injury.
- If you believe that you have absorbed the gas or that the gas has got into your eyes or mouth, seek medical advice immediately.
- Ask your dealer about the replacement of the lamp unit and check the inside of the projector.

Ask an Authorised Service Centre to clean inside the projector at least once a year.
- If dust is left to build up inside the projector without being cleaned out, it can result in fire or problems with operation.
- It is a good idea to clean the inside of the projector before the season for humid weather arrives. Ask your nearest Authorised Service Centre to clean the projector when required. Please discuss with the Authorised Service Centre regarding cleaning costs.

We are constantly making efforts to preserve and maintain a clean environment. Please take non repairable units back to your dealer or a recycling company.

Cautions when transporting

Do not subject the projector to excessive vibration or shocks.
- The projector lens need to be handled with care.
- Cover the lens with the lens cover when transporting the projector.

When transporting the projector, hold the body at the bottom securely.
- Do not hold the adjuster legs or the top cover to move the projector, as this may damage the projector.

Cautions when installing

Avoid setting up in places which are subject to vibration or shocks.
- The internal parts can be damaged, which may cause malfunctions or accidents.

Avoid setting up in places which are subject to sudden temperature changes, such as near an air conditioner or lighting equipment.
- The life of the lamp may be shortened or the projector may be turned off. See “TEMP indicator” on page 40.

Do not set up the projector near high-voltage power lines or near motors.
- The projector may be subject to electromagnetic interference.

If installing the projector to the ceiling, ask a qualified technician to carry out all installation work.
- You will need to purchase the separate installation kit (Model No. ET-PKF100H, ET-PKF100S). Furthermore, all installation work is should only be carried out by a qualified technician.
- See “Ceiling mount bracket safeguards” on page 44 for the **Safety cable** installation.

If using this projector at high elevations (above 1 400 m), set the HIGHLAND to ON. See “HIGHLAND” on page 38.
- Failure to observe this may result in malfunctions or the life of the lamp or the other components may be shortened.

Cautions on use

In order to get the best picture quality

- Draw curtains or blinds over any windows and turn off any lights near the screen to prevent outside light or light from indoor lamps from shining onto the screen.

Do not touch the surfaces of the lens or the front glass with your bare hands.

- If the surface of the lens becomes dirty from fingerprints or anything else, this will be magnified and projected onto the screen. Moreover, when not using the projector, close the **Front panel cover**.

Liquid crystal panel

- Do not project the same image for long periods of time, as this may remain as an afterimage on the liquid crystal panel.
- The liquid crystal panel of the projector is built with very high precision technology to provide fine picture details. Occasionally, a few stuck pixels may appear on the screen as fixed points of blue, green or red. It is recommended to switch off the projector once and try after 1hour later again. Please note that this does not affect the performance of your LCD.

The projector has a high pressure mercury lamp and that is characterised as follows.

- The brightness of the lamp depends on the duration of use.
- The lamp may explode or shorten the lamp life by shocks or chipping damage.
- The lamp may explode only occasionally after using the projector.
- The lamp may explode if using the projector after the instructed lamp replacement timing.
- The lamp life is depends on individual lamp characteristics, usage condition and the installation environment. Especially the consecutive use of the projector for more than 10 hours, or the frequent switching on or off may greatly affect on the lamp life.

Screen

- Do not apply any volatile substances which may cause discolouration to the screen, and do not let it become dirty or damaged.

Optical components

- If you use the projector consecutively 6 hours every day, the optical components may need to be replaced in less than 1 year.

Accessories

Make sure the following accessories are provided with your projector.

Remote control for PT-F100NTE*1 (x1) N2QAYB000152 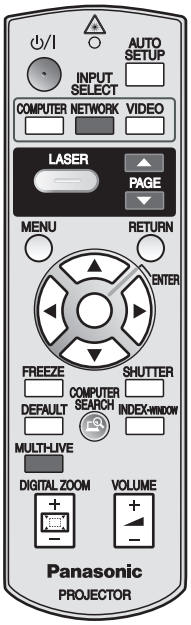	**Remote control** for PT-F100E*2 (x1) N2QAYB000154 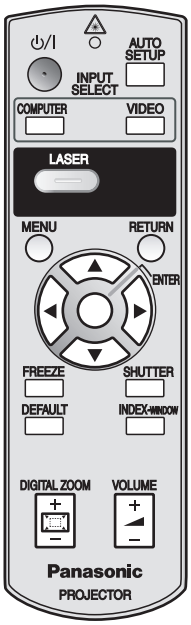	**AAA batteries** for **Remote control** (x2) 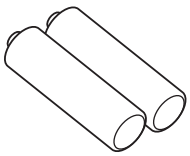	**Safety cable** TTRA0141 Attachment screw (x1) Safety cable (x1) 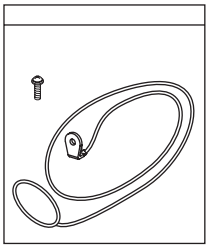
		Mains lead (x1) K2CM3DH00015 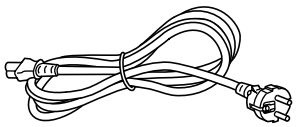	**CD-ROM***3 (x1) TQBH9009

*1. PT-F100NTE only
*2. PT-F100E only
*3. PT-F100NTE only

Minimum required setting screen

When you start the projection for the first time, the minimum required setting screen for projection will be displayed.

LANGUAGE

Select the required language setting.

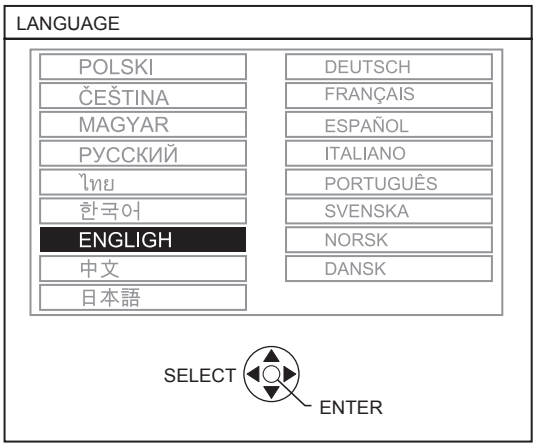

Press ▲ ▼ ◄ ► buttons of the **Remote control** or **Control panel** on the projector to highlight the required language, and press **ENTER** to proceed to the next setting.

OPTIONS

Select the current projection method and fan speed setting. If you need return to the previous setting, press the **RETURTN** button.

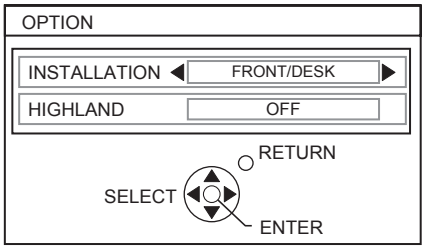

INSTALLATION

Press ◄ ► buttons of the **Remote control** or **Control panel** on the projector to select the required installation method. Press ▼ to proceed to the **HIGHLAND** setting.

FRONT/DESK	Setting on a desk/floor and projecting from front
FRONT/CEILING	Mounting in the ceiling and projecting from front
REAR/DESK	Setting on a desk/floor and projecting from rear
REAR/CEILING	Mounting in the ceiling and projecting from rear

HIGHLAND

If you use the projector at high elevation, the **HIGHLAND** setting need to be **ON** to set the fan speed high. Press ◄ ► to select the required option. If you need to return to the **INSTALLATION**, press ▲.

- **OFF** The fan speed is low.
- **ON** The fan speed is high.

NOTE:

- At 1 400 m (4 593 ft) above sea level, the setting must be **ON**.
- The loudness of fan noise depends on the **HIGHLAND** setting.

Press the ENTER button to start the projection.

- Once you finish the minimum requirement setting, it will not be displayed again unless the projector is initialised. See “INITIALISE ALL” on page 38.
- You can change the settings from the **MAIN MENU**. See “Menu Navigation” on page 29.

About Your Projector

Remote control

POWER button
While the **MAIN POWER** is on, switch between stand-by mode and projection mode.
(page 22)

Project a laser pointer.
(page 26)

Display the **MAIN MENU**.
(page 29)

Navigate through the menus with ▲▼◀▶, and activate the menu item with **ENTER**. (page 29)

Capture the projected image as a frozen picture. (page 27)

Reset some of the settings to the factory default settings.
(page 27)

- **MULTI-LIVE** is only for PT-F100NTE.
- See **CD-ROM** contents.

Control to change the scale by means of digital zoom. (page 28)

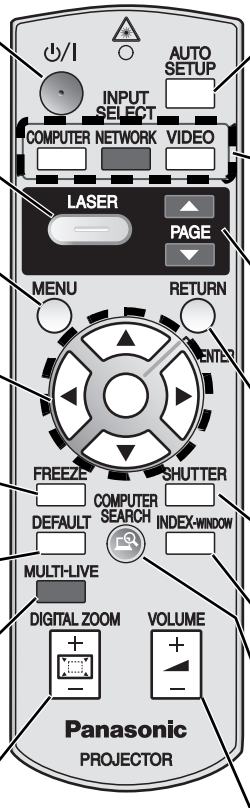

VOLUME
Control to adjust the volume of the speakers.
(page 28)

AUTO SETUP
Automatically adjust the setting of **DOT CLOCK**, **CLOCK PHASE** and **SIGNAL SEARCH** for the projected image of **COMPUTER** signal.
(page 25)

COMPUTER / NETWORK / VIDEO
INPUT SELECT buttons
Switch the required input signal button to select.
- **NETWORK** button is only for PT-F100NTE.
- See **CD-ROM** contents.

PAGE
- **PAGE** buttons are only for PT-F100NTE.
- See **CD-ROM** contents.

RETURN
Return to the previous menu.
(page 29)

SHUTTER
Turn off the projection temporarily.

INDEX-WINDOW
Display the frozen image while the display of subsequent images continues. (page 27)

COMPUTER SEARCH
- **COMPUTER SEARCH** button is only for PT-F100NTE.
- See **CD-ROM** contents.

Battery compartment

1. Press the tab and lift up the cover.
2. Insert the batteries according to the polarity diagram indicated inside.

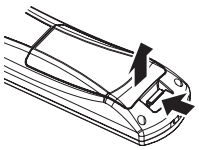

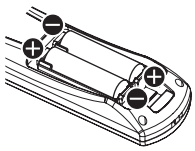

Top view

Remote control signal and Laser pointer beam emitters. (page 25)

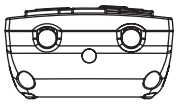

Attaching a hand strap

You can attach a favourite strap on to the **Remote control**.

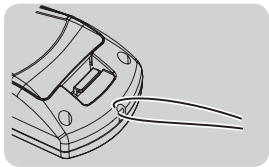

Remote control indicator

If you press any button except the **LASER** button, the **Remote control indicator** will flash. If you press the **LASER** button, it will lit.

Remote control indicator

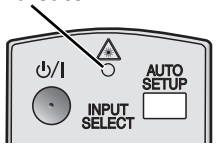

NOTE:

- Do not drop the **Remote control**.
- Avoid contact with liquids or moisture.
- Use manganese batteries or alkaline batteries with the **Remote control**.
- Do not attempt to modify or disassemble the **Remote control**. Contact an Authorised Service Centre for repairs.
- Do not keep pressing the **Remote control** buttons as this may shorten battery life.
- Do not point the laser in other people's eyes or stare into beam.
- See "Remote control operation" on page 25.

Projector body

Top and front view

Indicators
- **POWER** indicator (page 22)
- **LAMP** indicator (page 41)
- **TEMP** indicator (page 41)
- **FILTER** indicator (page 41)

Remote control signal receptor (page 25)

ALS (Ambient Luminance Sensor) (page 32)

Lens shift lever (page 18)

Air intake port

Speaker

Projection lens

Levers
- **Focus lever** (page 24)
- **Zoom lever** (page 24)

Front panel cover
Hold both side of the top corner of the **Front panel cover** to open or close.
- While not operating the controls panel, keep the **Front panel cover** closed.

POWER button
While the **MAIN POWER** is on, switch between stand-by mode and projection mode. (page 22)

Navigation buttons
Navigate through the menus with ▲▼◀▶, and activate the menu item with **ENTER**. (page 29)

Control panel

⏻/I INPUT SELECT MENU ENTER RETURN

INPUT SELECT button
Switch to cycle through the input method. (page 24)

MENU button
Display the **MAIN MENU**. (page 29)

RETURN button
Return to the previous menu. (page 29)

NOTE:
- Do not cover the ventilation openings or place anything within 50 cm (20") of them as this may cause damage or injury.
- While the projector is not in use, keep the **FRONT PANEL COVER** closed to protect the lens.

Back and bottom view

Security lock
Attache the commercial shackle lock, manufactured by Kensington, to protect your projector.
Compatible with the Kensington MicroSaver Security System.

Lamp unit compartment
(page 43)

Air exhaust port
Heated air comes out of this opening.

MAIN POWER
Switch the projector on/off.
(page 23)

AC IN
Connect the **Mains lead** to supply electronic power to the projector.
(page 22)

ARF (Auto Rolling Filter) compartment
(page 42)

Font leg adjusters
Screw up/down to adjust the projection angle. (page 17)

Safety cable attachment point
Attach the **Safety cable** when mounted in the ceiling. (page 44)

COMPUTER1 IN
Connect an RGB signal cable from a computer.
COMPUTER2 IN/1 OUT
Connect an RGB signal cable from a computer. Selectable for input and output by menu operation.

LAN
Connect a LAN cable for network connection. This terminal is PT-F100NTE only

S-VIDEO IN
Connect a S-VIDEO signal cable.
VIDEO IN
Connect an RCA composite video cable.

AUDIO IN
Connect audio cables for inputting audio signal corresponding to **VIDEO IN**, **S-VIDEO IN** and **COMPONENT IN**.

COMPONENT IN
Connect a YPBPR signal cable.

SERIAL
See “Serial terminal” on page 47.
REMOTE
See “REMOTE terminal” on page 49.

COMPUTER AUDIO IN
Connect audio cables for inputting audio signals corresponding to **COMPUTER1 IN** and **COMPUTER2 IN/1 OUT**.

VARIABLE AUDIO OUT
Connect an audio cables for outputting audio signals to the connected equipment.

NOTE:
- Do not cover the ventilation openings or place anything within 50 cm (20") of them as this may cause damage or injury.
- When a cable is connected to the **VARIABLE AUDIO OUT**, the built-in speaker will be disabled.

Setting up

Screen size and throw distance

You can adjust the projection size with 2.0x zoom lens. Calculate and define the throw distance as follows.

Projected image

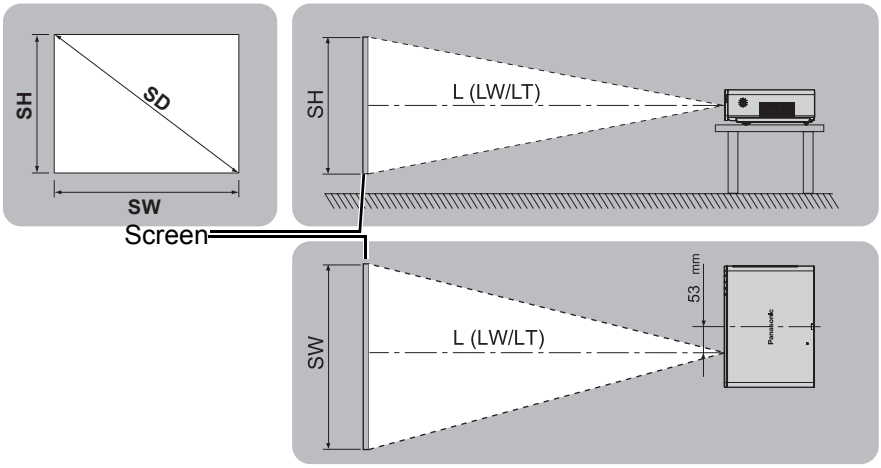

Projection size (4 : 3)			Throw distance (L)	
Screen diagonal (SD)	Screen height (SH)	Screen width (SW)	Minimum distance (LW)	Maximum distance (LT)
33" (0.84 m)	0.50 m (1'7")	0.67 m (2'2")		1.9 m (6'2")
40" (1.02 m)	0.61 m (2')	0.81 m (2'7")	1.2 m (3'11")	2.4 m (7'10")
50" (1.27 m)	0.76 m (2'5")	1.02 m (3'4")	1.5 m (4'11")	3.0 m (9'10")
60" (1.52 m)	0.91 m (2'11")	1.22 m (4')	1.8 m (5'10")	3.6 m (11'9")
70" (1.78 m)	1.07 m (3'06")	1.42 m (4'7")	2.1 m (6'10")	4.2 m (13'9")
80" (2.03 m)	1.22 m (4')	1.63 m (5'4")	2.4 m (7'10")	4.8 m (15'8")
90" (2.29 m)	1.37 m (4'5")	1.83 m (6')	2.7 m (8'10")	5.4 m (17'8")
100" (2.54 m)	1.52 m (4'11")	2.03 m (6'7")	3.0 m (9'10")	6.0 m (19'8")
120" (3.05 m)	1.83 m (6')	2.44 m (8')	3.6 m (11'9")	7.2 m (23'7")
150" (3.81 m)	2.29 m (7'6")	3.05 m (10')	4.5 m (14'9")	9.0 m (29'6")
200" (5.08 m)	3.05 m (10')	4.06 m (13'3")	6.0 m (19'8")	12.1 m (39'8")
250" (6.37 m)	3.81 m (12'6")	5.08 m (16'8")	7.6 m (24'11")	15.1 m (49'6")
300" (5.08 m)	4.57 m (14'11")	6.10 m (20')	9.1 m (29'10")	18.1 m (59'4")

* All measurements above are approximate and may differ slightly from the actual measurements.

Calculation methods for screen dimensions

You can calculate more detailed screen dimension from the screen diagonal.

SW = SD x 0.0203 **SH = SD x 0.0152**

LW = 0.0304 x SD - 0.048 **LT = 0.0606 x SD - 0.057**

Unit: m

* The results above are approximate and may differ slightly from the actual measurements.

NOTE:

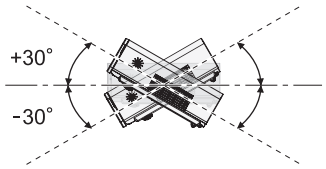

- See “Screen size and throw distance for 16:9 aspect ratio” on page 52.
- Do not use the projector at a raised or a horizontally tilted position as it may cause malfunction of the projector.
- Make sure the projector lens surface is parallel with the screen. You can tilt the projector body approximately ± 30° vertically. Overtilting may result in shortening the component’s life.
- For the best quality of the projection image, install a screen where sun light or room light does not shine directly onto the screen. Close window shades or curtains to block the lights.

Projection method

You can use the projector with any of the following 4 projection methods. To set the desired method in the projector, See “INSTALLATION” on page 37..

Setting on a desk/floor and projecting from front

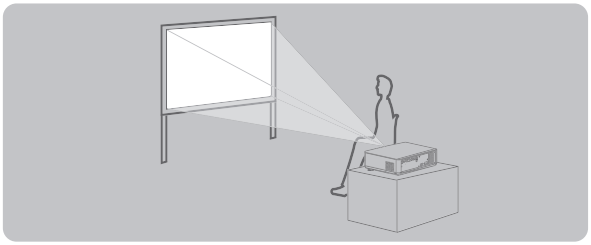

INSTALLATION: FRONT/DESK

Setting on a desk/floor and projecting from rear

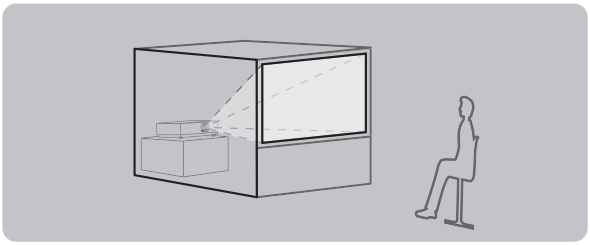

INSTALLATION: REAR/DESK

Mounting in the ceiling and projecting from front

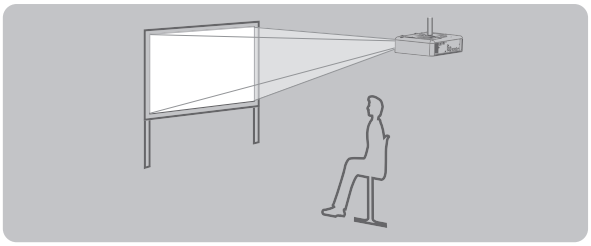

INSTALLATION: FRONT/CEILING

Mounting in the ceiling and projecting from rear

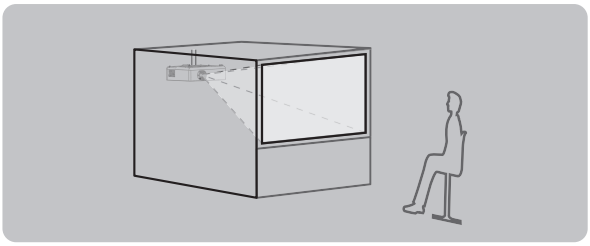

INSTALLATION: REAR/CEILING

NOTE:
- A translucent screen is required for rear projection.
- When mounting the projector in the ceiling, the optional ceiling mount bracket (ET-PKF100, ET-PKF100S) is required.
- See “Ceiling mount bracket safeguards” on page 44.

Front leg adjusters and throwing angle

You can screw up/down the front leg adjusters to control the angle of the projector for adjusting the throwing angle. See “Positioning the image” on page 24.

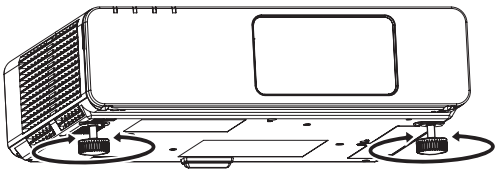

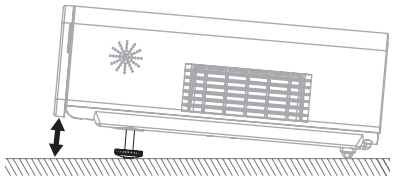

NOTE:
- Heated air comes out of the **Air exhaust port**. Do not touch the **Air exhaust port** directly.
- If keystone distortion occurs, see “KEYSTONE” on page 34.

Lens shift and positioning

If the projector is not positioned right in front of the centre of the screen, you can adjust the projected image position by moving the **Lens shift lever** within the shift range of the lens.

Adjusting the Lens shift lever

1. Open the **Front panel cover**.
2. Screw the **Lens shift lever** counterclockwise to unlock.
3. Move the **Lens shift lever** to adjust the projected image position.
4. Screw the **Lens shift lever** clockwise to lock.

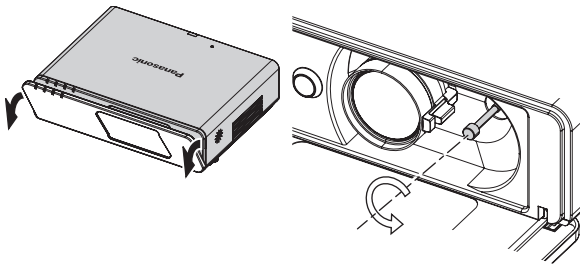

Horizontal shift

You can place the projector where the projector lens is up to 32% horizontally off-centre from the screen and then adjust the image position with the **Lens shift lever**.

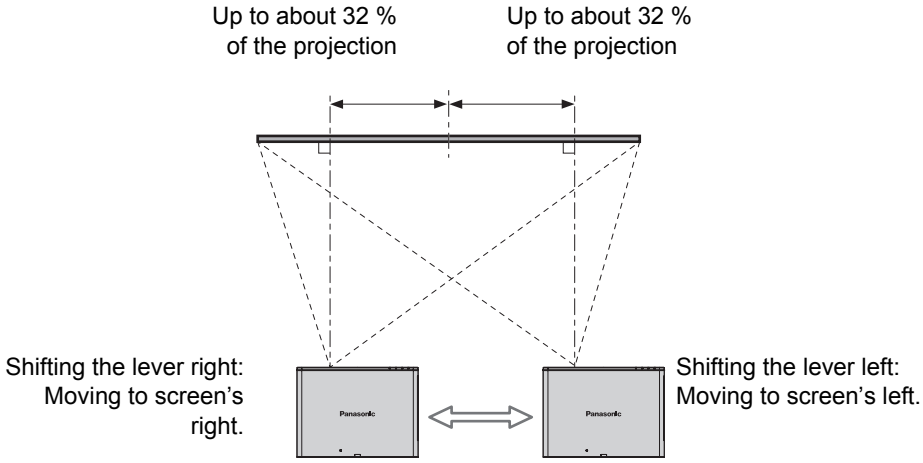

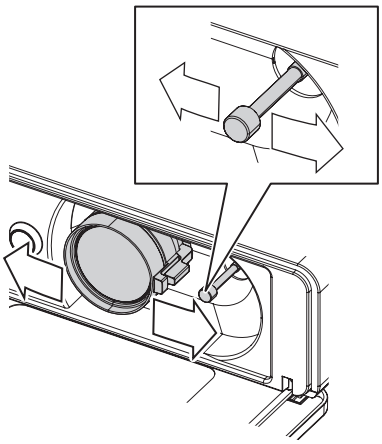

Vertical shift

You can place the projector where the projector lens is up to 50% vertically off-centre from the screen and the adjust the image position with the **Lens shift lever**.

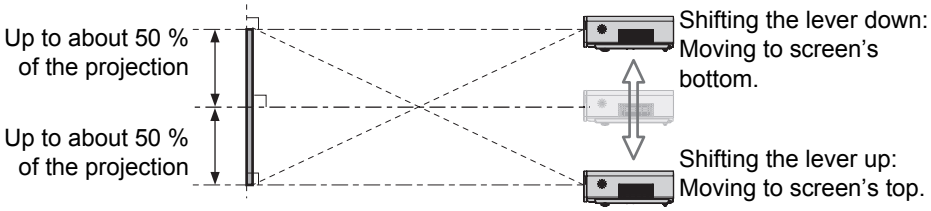

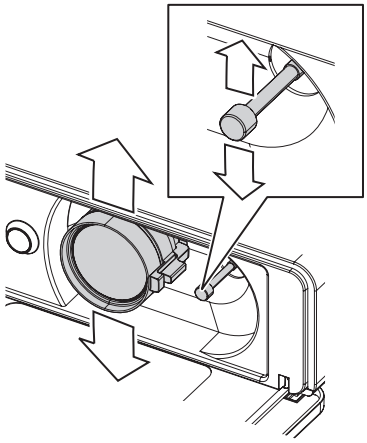

Projector location range

You can determine where to locate the screen and the projector by considering the lens shift possibilities. See “Positioning the image” on page 24.

When the screen position is fixed

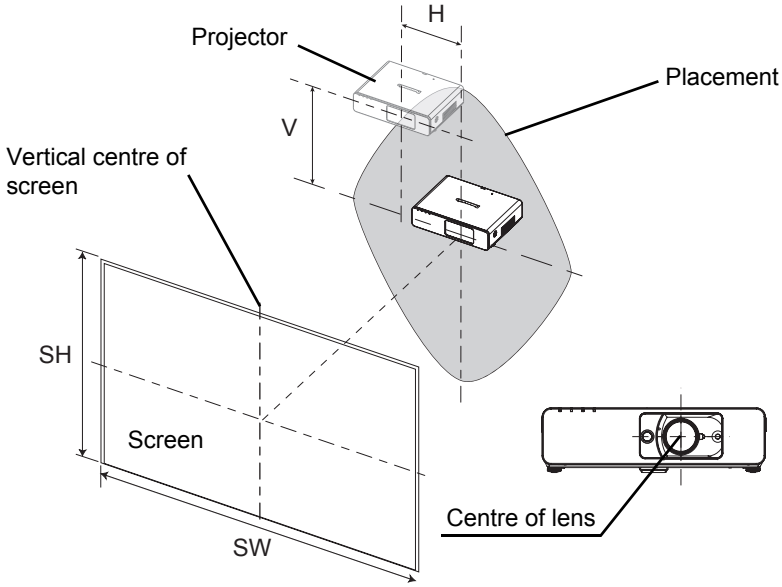

When the projector position is fixed

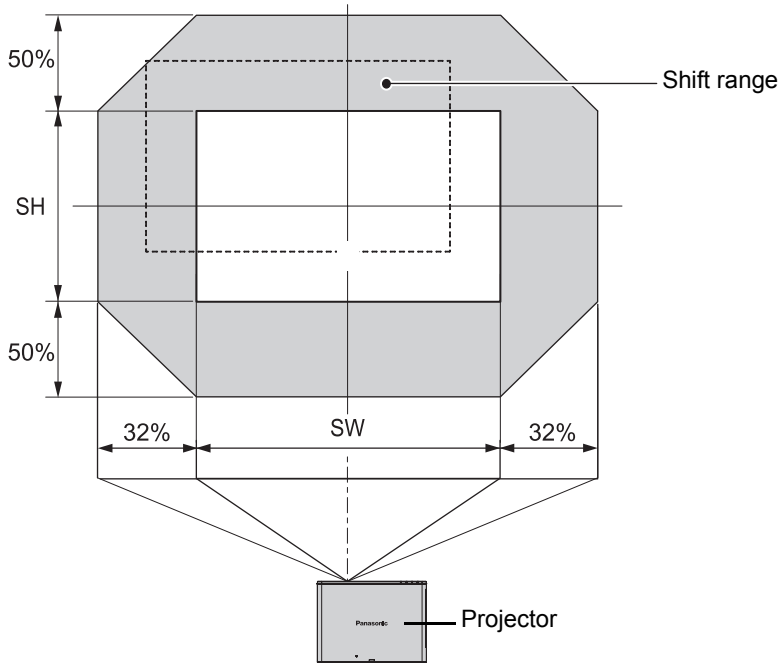

NOTE:

- When the projector is located right in front of the screen and the **Lens shift lever** is centred, you will get the best quality of the projection image.
- When the **Lens shift lever** is at the vertical limit of the shift range, you cannot move the lever to the horizontal limit, likewise when the **Lens shift lever** is at the horizontal limit of the shift range, you cannot move the lever to the horizontal limit.
- When the projector is tilted and you adjust **KEYSTONE**, the centre of the screen and the lens need to be realigned.
- Do not attempt to pull the **Lens shift lever** hard while adjusting.

Connections

Before connection to the projector

- Read and follow the operating and connecting instructions of each peripheral device.
- The peripheral devices must be turned off.
- Use cables that match each peripheral device to be connected.
- If the input signal is affected by signal jitter, the projected image may have poor image quality and timebase correction is effective.
- Confirm the type of video signals. See “List of compatible signals” on page 46.

Connecting with computers

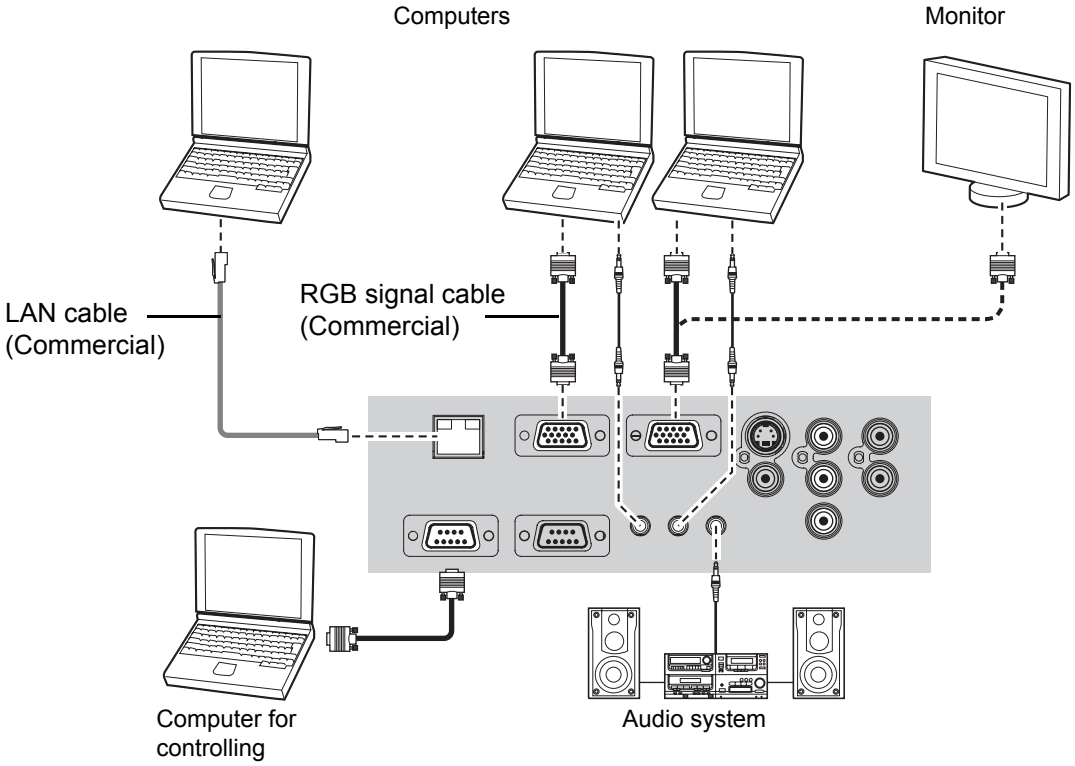

NOTE:
- When **COMPUTER2 SELECT** in the **OPTION** menu is set to **OUTPUT**, do not connect any input signals.
- See **CD-ROM** contents for the LAN network connection.

Connecting with AV equipment

Connecting with VIDEO IN/S-VIDEO IN

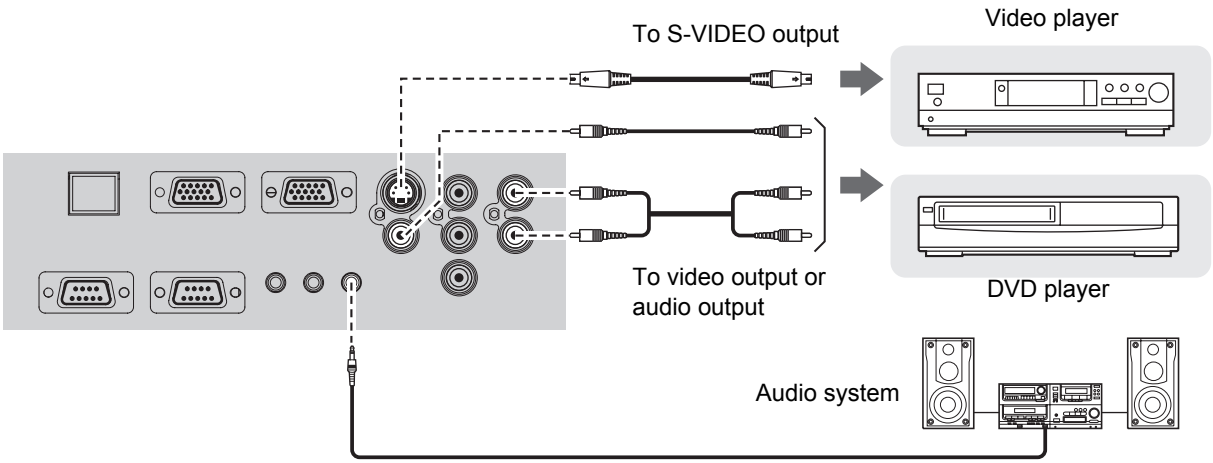

NOTE:
- When you connect more than one AV equipment, switch the audio connection manually.

Connecting with COMPONENT IN

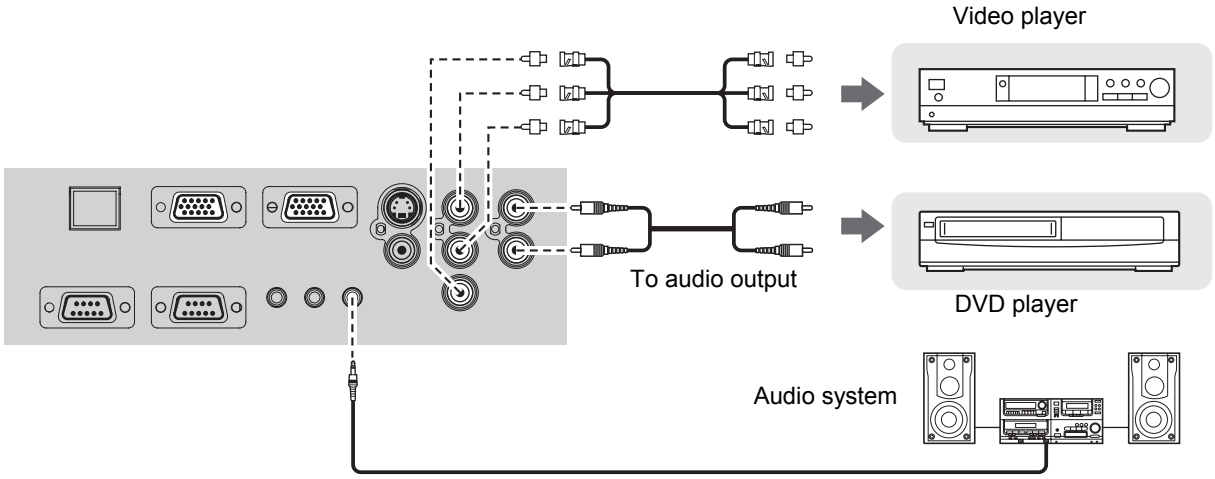

NOTE:
- If you connect the BNC cables, use with a commercial BNC-RCA adaptor.

Switching the projector on/off

Mains lead

Connecting

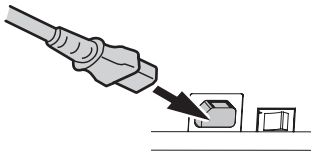

1. Make sure the shape of the mains plug and the **AC IN** connector on the back of the projector match, then push the plug all the way in.
2. Connect the **Mains lead** to a mains socket.

Disconnecting

1. Make sure the **MAIN POWER** is switched off and unplug the **Mains lead** from the mains socket.
2. Hold the plug and unplug the **Mains lead** from the **AC IN** connector on the back of the projector.

Direct power off function

You can disconnect the **Mains lead** from the projector or switch off the **MAIN POWER** button while projecting or soon after projecting. The internal lamp cooling fan will keep operating by the internal power supply.

NOTE:
- If the projector is switched on again while the internal cooling fan is still operating by the internal power supply, it may take a while to start the projection.

Direct power on function

If you activate the **DIRECT POWER ON**, you can start the projection only with connecting the **Mains lead** or switching on the **MAIN POWER**. See “DIRECT POWER ON” on page 37.

NOTE:
- Do not use other than a provided **Mains lead**.
- Ensure all the input devices are connected and turned off before connecting the **Mains lead**.
- Do not force the connector as this may damage the projector and/or the mains lead.
- Dirt or dust build-up around plugs may cause fire or electrical hazards.
- Switch off the power to the projector when not in use.

POWER indicator

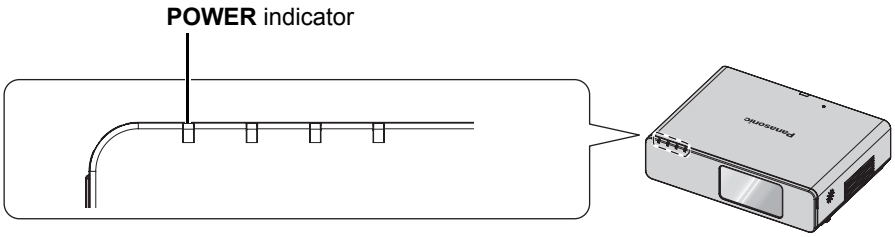

Indicator status		Status
No illumination or flashing		The **MAIN POWER** is switched off.
RED	**Lit**	The **MAIN POWER** is switched on and the projector is in standby. When the **LAMP** or **TEMP** indicator is flashing, the **POWER** indicator will not be lit.
	Flashing	Network connection is ready while the **POWER** is turned off.
GREEN	**Flashing**	The **POWER** is switched on and the projector is getting ready to project.
	Lit	The projector is ready to project.
ORANGE	**Lit**	The **POWER** is switched off and the projector is cooling the lamp.
	Flashing	The **POWER** is switched on again when cooling the lamp and recovering to projection mode. Recovery may take a while.

NOTE:
- If the projector is switched on again while the internal cooling fan is still operating by the internal power supply, it may take a while to start the projection.
- The electric consumption in standby mode is 3 W.

Switching on the projector

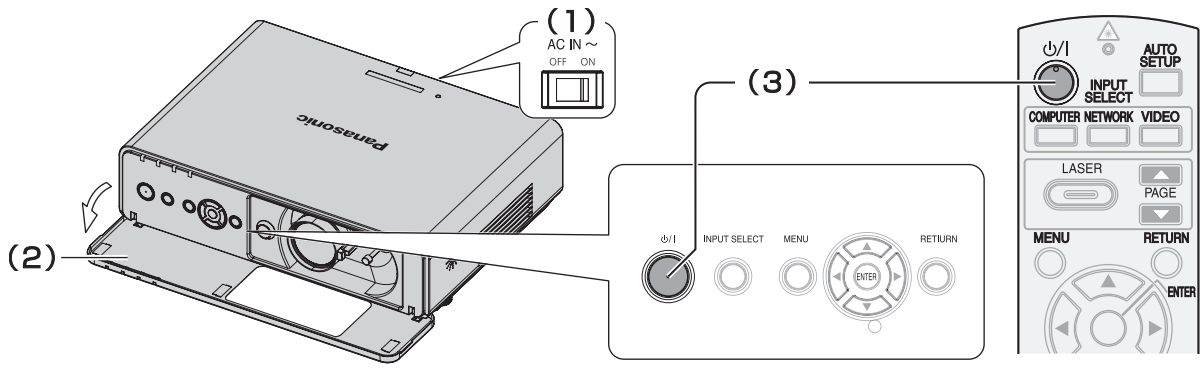

1. Switch the **MAIN POWER** on.
   - The power indicator lights up in **RED**.
2. Open the **Front panel cover**.
   - This is not necessary in **Remote control** operation.
3. Press the **POWER** button.
   - The power indicator lights up in **GREEN** after flashing for a while.
   - The **STARTUP LOGO** is displayed on the screen. See “STARTUP LOGO” on page 36.

NOTE:
- Some small rattling or tinkling sound may be heard when starting up, but this is normal and does not affect the performance of the projector.
- If you disconnected the **Mains lead** or switched off the **MAIN POWER** while on projecting mode, the projection will start with connecting the **Mains lead** or switching on the **MAIN POWER**. See “DIRECT POWER ON” on page 37.

Switching off the projector

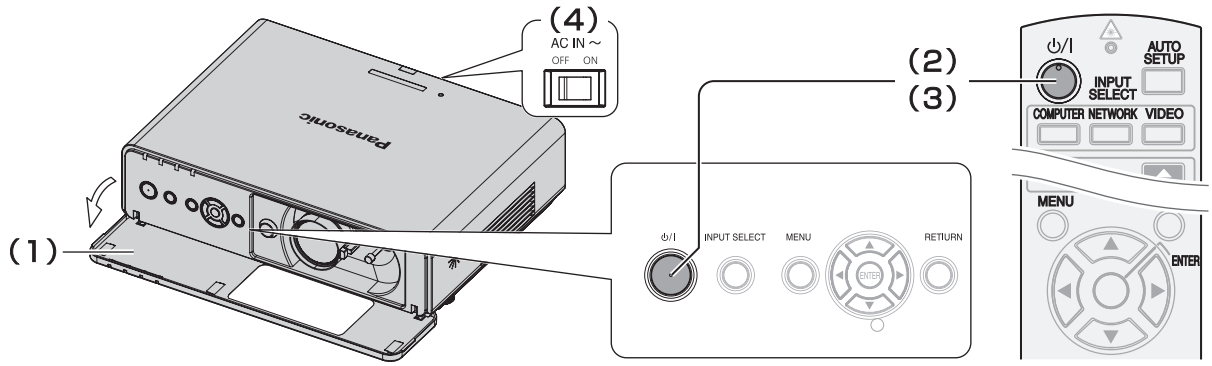

1. Open the **Front panel cover**.
   - This is not necessary in **Remote control** operation.
2. Press the **POWER** button.
   - The confirmation screen is displayed.
   - To return to the projection, press any button except the **POWER** button.
3. Press the **POWER** button.
   - The power indicator lights up in **ORANGE** while cooling the lamp, then illuminates **RED** when is ready to switch off the **MAIN POWER**.
4. Switch off the **MAIN POWER** on the back of the projector.

NOTE:
- Press the **POWER** twice or for a long duration to switch the power off.
- You can disconnect the **Mains lead** or switch off the **MAIN POWER** instead of following this procedure. See “DIRECT POWER ON” on page 37.

Projecting an image

Selecting the input signal

1. Switch on the connected devices.
   - Press the play button of the required device.
2. Press the **INPUT SELECT** buttons to select the required input method if needed. See “Selecting the input signal” on page 24.
   - The image will be projected on the screen.

NOTE:
- **SIGNAL SEARCH** is **ON** as default and the signal from the connected devices is detected automatically. See “SIGNAL SEARCH” on page 37.

Positioning the image

1. Open the **Front panel cover**.
2. Adjust the projected image with the **Lens shift lever**. See “Lens shift and positioning” on page 18.

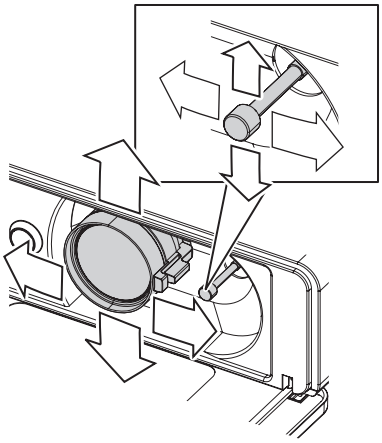

3. Adjust the angle of the projector.
   - Screw down the **Front leg adjusters** and adjust the angle vertically.
   - See “Front leg adjusters and throwing angle” on page 17.

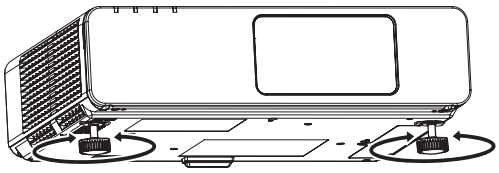

4. Adjust the focus and the projected image size.
   - Turn the **Focus lever** and **Zoom lever** to adjust the image.
   - You can confirm the adjusted effect with the **TEST PATTERN** in **OPTION** menu. See “TEST PATTERN” on page 38.

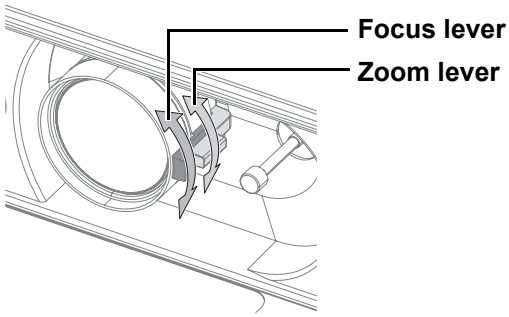

NOTE:
- Do not touch the **Air Exhaust port** as this may cause burns or injury.
- If keystone distortion occurs, see “KEYSTONE” on page 34.
- If you adjust the focus, you may need to adjust the size of the image by moving the **Zoom lever** again.

Remote control operation

Operating range

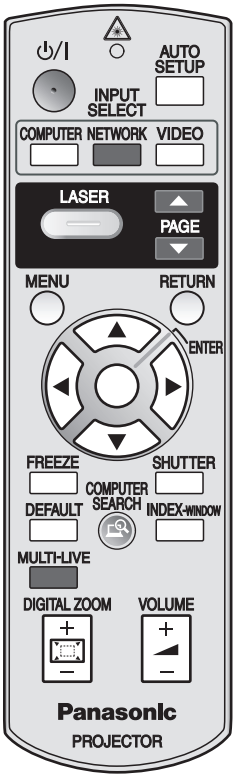

You can operate the projector with the **Remote control** within the remote range 15 m (49'2").

Facing to the projector

Ensure the **Remote control emitter** is facing to the **Remote control signal receptor** on front/back of the projector and press the required buttons to operate.

Facing to the screen

Ensure the **Remote control emitter** is facing to the screen and press the required buttons to operate the projector. The signal will be reflected off the screen. The operating range may differ due to the screen material.

NOTE:

- Do not let strong light shine onto the signal receptor. The **Remote control** may malfunction under strong light such as fluorescent.
- If there are any obstacles between the **Remote control** and the **Remote control signal receptor**, the **Remote control** may not operate correctly.

Setting up the image position automatically

AUTO SETUP

You can adjust the setting of **SIGNAL SEARCH**, **DOT CLOCK** and **CLOCK PHASE** automatically for the projected **COMPUTER** signal image.

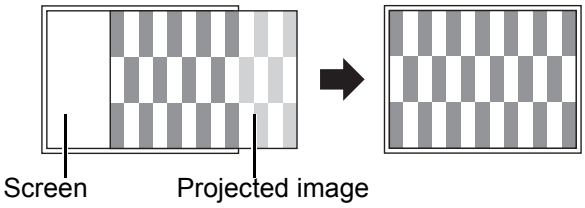

NOTE:

- **SIGNAL SEARCH** will be adjusted only when the **SIGNAL SEARCH** is set to **ON**.
- If the dot clock frequency is 108 MHz or higher, **AUTO SETUP** is not effective.
- If the projected image is dark or blurred around the edge, **AUTO SETUP** may stop the processing before complete. Project a much clearer or lighter image and press the **AUTO SETUP** button again.

Switching the input signal

You can switch the input method manually by pressing the **COMPUTER**, **NETWORK** (PT-F100NTE only) and **VIDEO** buttons. Press the required button several times or ◄ ► to cycle through the input methods as follows. The actual projected image will be changed in a while.

- The graphical guidance will be displayed on the upper right of the projected image and you can confirm the selected input method which is highlighted in yellow. See "INPUT GUIDE" on page 36.

Pressing the COMPUTER button

NOTE:
- Only when the **COMPUTER2 SELECT** is set to **COMPUTER2 IN**, you can switch between **COMPUTER1** and **COMPUTER2**.

Pressing the NETWORK button

- The **NETWORK** button is only for PT-F100NTE.
- See **CD-ROM** contents for more detailed information.

Pressing the VIDEO button

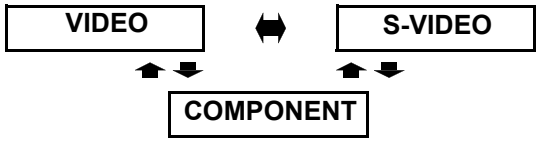

Pressing the INPUT SELECT button on the projector

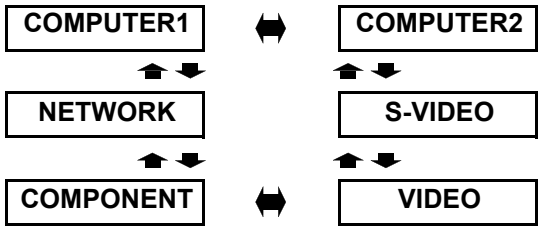

- **NETWORK** is only for PT-F100NTE.

NOTE:
- If you select an unplugged input method, the guidance will blink on and off several times.
- See "List of compatible signals" on page 46.
- See "Connections" on page 20.

Using the laser pointer

You can highlight items on the screen with the red laser pointer while projecting the image in presentations or visual demonstrations as an eye-catching pointing device.
Hold down the **LASER** button to goes on the laser pointer and release to goes off.

NOTE:
- The laser pointer should never be projected directly into the eyes of a person or animal.
- Do not aim the laser at reflective surfaces.
- Do not allow children to use laser pointer.
- Never look directly into the laser beam.
- The laser pointer is not effective with translucent screens.
- Please read the cautions on the **Remote control**.
- This is a Class II laser product.

Deactivating the LASER button

You can deactivate the **LASER** button for an accidental operation.

1. Open the battery compartment cover of the **Remote control**.
2. Slide the switch tab.
3. Close the battery compartment cover of the **Remote control**.
   - See "Battery compartment" on page 13.

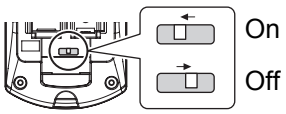

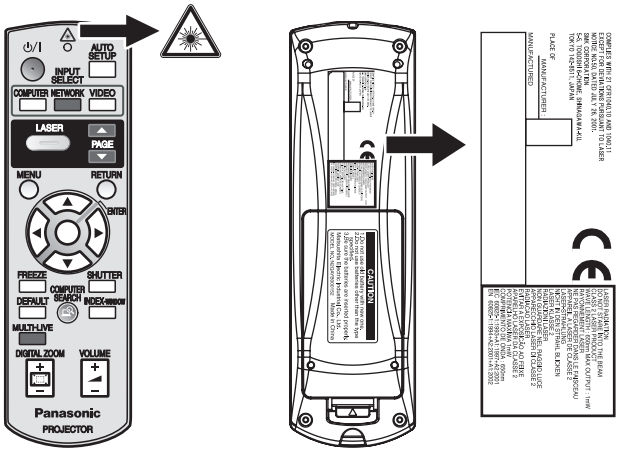

Capturing an image

FREEZE

When projecting an image, press **FREEZE** to capture the projected image and display it on the screen as a still picture. Press again to escape. While the image is frozen, the sound will be stopped.

NOTE:
- Escaping from the freeze mode is available by pressing any button.

Stopping the projection temporary

SHUTTER

You can turn off the lamp and stop the projection temporary for electrical power save.

Press the **SHUTTER** button to return to the projection.

Resetting to the factory default settings

DEFAULT

You can reset most of the customised settings to the factory defaults by pressing **DEFAULT** button of the **Remote control**. Display the required sub menu or the menu items and press the button again.

● See “Main menu and Sub-menu” on page 30.

NOTE:
- Some menu items are not available to reset by pressing the **DEFAULT** button. Adjust each menu items manually.
- To reset all the settings to the factory defaults, see “INITIALISE ALL” on page 38.

Projecting an image in INDEX-WINDOW mode

INDEX-WINDOW

You can project an image in split 2 windows as an **INDEX-WINDOW**, one is frozen, stored in memory and displayed on the screen’s left side, while the display of subsequent images continues on the right.
To escape from the **INDEX-WINDOW**, press the **MENU** or **RETURN** button.

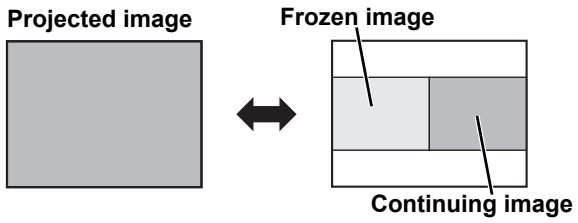

● Switching the position

In default, the frozen image is displayed on the left and the subsequent image is displayed on the right. Press ◄ ► to switch the position.

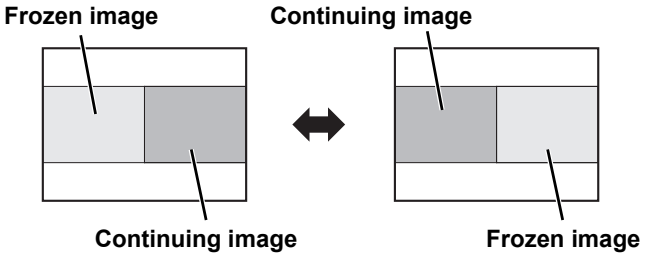

● Changing the image size

Press ▲ ▼ to switch and cycle through in 3 size.

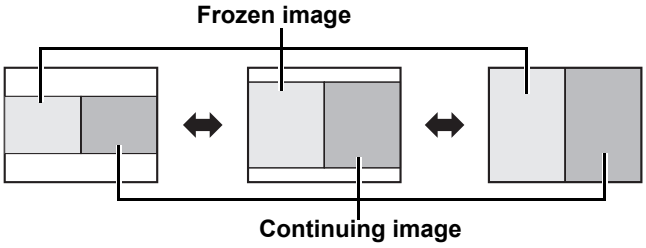

NOTE:
- If you change the window size, the aspect ratio of the image is changed and becomes vertically elongated.

● Capturing a new image

While in **INDEX-WINDOW** mode, press **ENTER** to capture a new image and the frozen image window will be updated in a while.

Enlarging the centred area

You can enlarge the projected image down to a centred area for emphasizing within the range of 1x to 2x.

Enlarging the image

1. Press **DIGITAL ZOOM +/-** once.
   - The centred area of the image will then be enlarged to 1.5x.

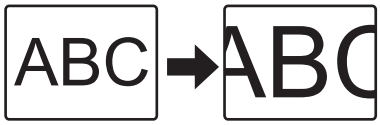

2. Adjust the image size by pressing **DIGITAL ZOOM +/-**.
   - The image size will be changed in steps of 0.1.

Shifting the centre point

Press ▲ ▼ ◄ ► to shift the centre point.

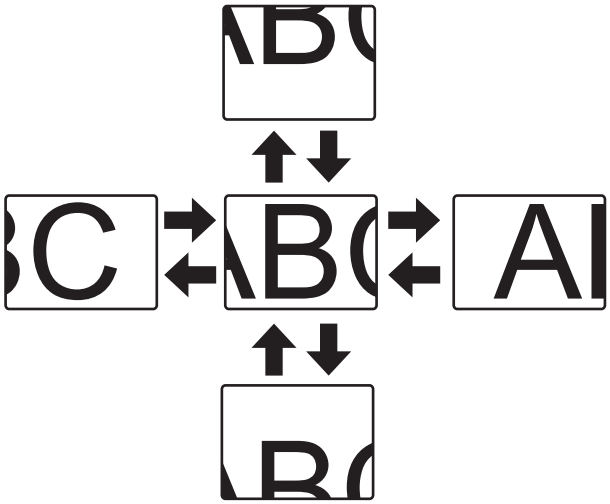

NOTE:
- When the **COMPUTER** signal is projected, the enlargement range will be changed to 1x to 3x. When the **FRAME LOCK** in **POSITION** menu is set to **ON**, the enlargement range is 1x to 2x. See “FRAME LOCK” on page 35.
- When the input signal is changed while the **DIGITAL ZOOM** is activated, the **DIGITAL ZOOM** will be cancelled.

Controlling the volume of the speaker

You can control the volume of the built-in speakers and output sound. Press +/- to control the volume.

NOTE:
- Power consumption can be reduced if the volume level is lowered.

Menu Navigation

The menu system allows you to access functions which do not have their own dedicated buttons on the **Remote control**. The menu options are structured and categorised. You can navigate through the menu with ▲ ▼ ► ◄ buttons.

Navigating through the MENU

Displaying the Main menu

Press the **MENU** button to display the **Main menu** and the operating guidance.

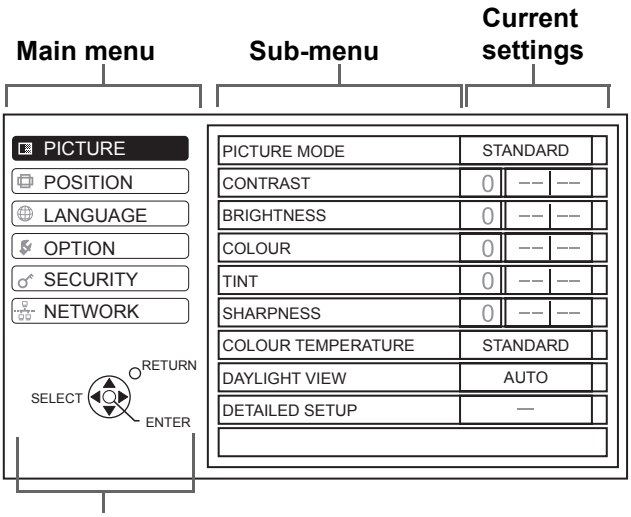

Operating guidance
Contains the required buttons to adjust the settings.

Adjusting with the bar scale items

The triangle mark under the bar indicates factory default setting and the square indicates the current setting.

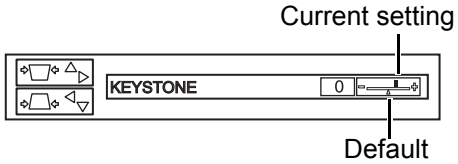

Returning to the previous menu

Press the **MENU** or **RETURN** button to return to the previous menu. Press repeatedly to escape from the menu mode and return to the projection.

Operating procedure

1. Press ▲ ▼ to scroll to the required **Main menu** item and press **ENTER** to select.
   - The selected item is highlighted in orange and the **Sub-menu** is displayed on the right.
   - See “Main menu and Sub-menu” on page 30.

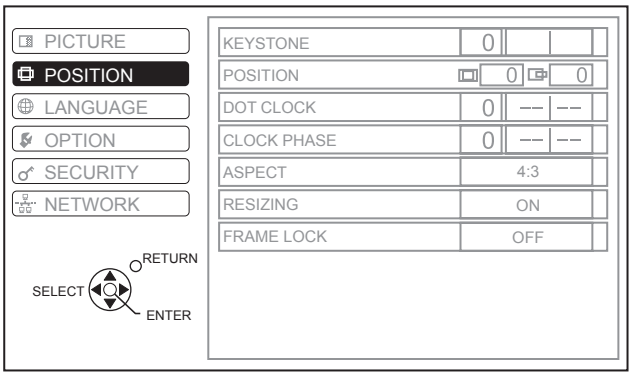

2. Press ▲ ▼ to scroll to the required **Sub-menu** item and press ◄ ► or **ENTER** to adjust.
   - The selected item is called up and the other menu items disappear from the screen. Called up item will be disappear after 5 seconds and return to the menu mode.
   - If there is a lower level, the next level will be displayed.

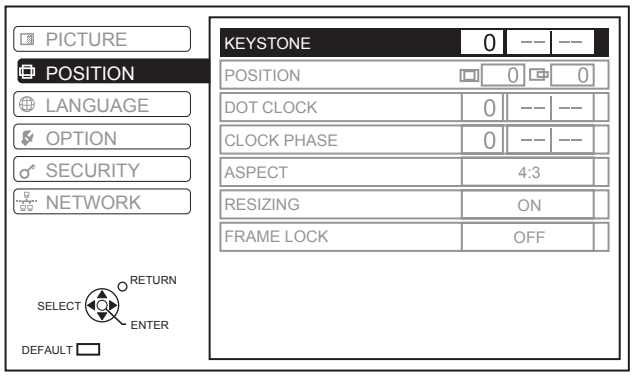

3. Press ◄ ► to adjust or set the selected item.
   - For items using a bar scale, the current settings are displayed on the left of the bar scale.
   - You can cycle through the options of an item by pressing ◄ ►.

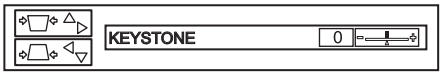

4. Press **MENU** or **RETURN** to return to the previous menu.

NOTE:
- See “Resetting to the factory default settings” on page 27 to reset each menu items.
- See “INITIALISE ALL” on page 38 to reset all the settings.

Main menu and Sub-menu

The **Main menu** has 6 options. Select the required menu item and press **ENTER** to display the **Sub-menu**.

NOTE:
- Some default settings vary by the selected input signal.
- **Sub-menu** items vary according to the selected input signal.
- Some settings are adjustable without any signals.

Main menu	Sub-menu	Options (* is default setting)		Page
PICTURE	**PICTURE MODE**	**NATURAL** **STANDARD*** **DYNAMIC** **BLACKBOARD**		page 32
	CONTRAST	• Default: 0		page 32
	BRIGHTNESS	• Default: 0		page 32
	COLOUR	• Default: 0		page 32
	TINT	• Default: 0		page 32
	SHARPNESS	• Default: 0		page 32
	COLOUR TEMPERATURE	**LOW** **HIGH** **STANDARD***		page 32
	DAYLIGHT VIEW	**AUTO*** **OFF** **ON**		page 32
	DETAILED SETUP[*1]	**WHITE BALANCE** (RGB signals only) • Default: 0	**WHITE BALANCE RED** **WHITE BALANCE GREEN** **WHITE BALANCE BLUE**	page 33
		TV-SYSTEM (S-VIDEO/VIDEO signals only)	**AUTO*** **NTSC** **NTSC 4.43** **PAL** **PAL-M** **PAL-N** **SECAM**	
		STILL MODE (S-VIDEO/VIDEO)	**OFF*** **ON**	
		NOISE REDUCTION (S-VIDEO/VIDEO)	**ON*** **OFF**	
POSITION	**KEYSTONE**[*2]	• Default: 0		page 34
	POSITION	**H**	• Default: 0	page 34
		V	• Default: 0	
	DOT CLOCK[*3]	• Default: 0		page 34
	CLOCK PHASE[*4]	• Default: 0		page 34
	ASPECT	**4:3** **16:9** **S4:3** **AUTO**		page 34
	RESIZING	**OFF***	**ON**	page 35
	FRAME LOCK[*2]	**OFF***	**ON**	page 35
LANGUAGE	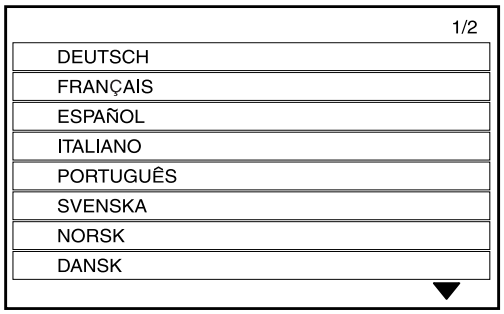			

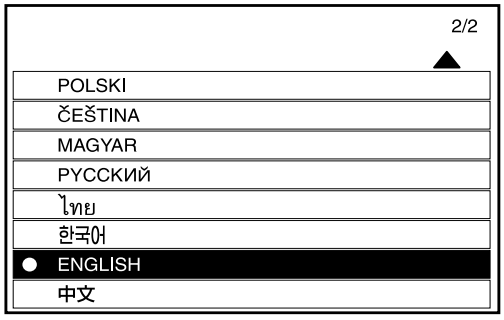

*1. **S-VIDEO**/**VIDEO**/**COMPUTER** signals only
*2. Only **KEYSTONE** is available in **POSITION** menu with signals from **WIRED LAN** or **WIRELESS LAN**.
*3. **COMPUTER** signals only
*4. **COMPUTER**/**COMPONENT** signals only

Main menu	Sub-menu	Options (* is default setting)			Page
OPTION	**INPUT GUIDE**	**DETAILED***	**SIMPLE**		page 36
		OFF			
	STARTUP LOGO	**ON***	**OFF**		page 36
		USER			
	COMPUTER2 SELECT	**INPUT***	**OUTPUT**		page 36
	LAMP RUNTIME				page 36
	FILTER REMAINING				page 37
	POWER OFF TIMER	**OFF***	**35 MIN.**		page 37
		15 MIN.	**40 MIN.**		
		20 MIN.	**45 MIN.**		
		25 MIN.	**50 MIN.**		
		30 MIN.	**60 MIN.**		
	DIRECT POWER ON	**OFF***	**ON**		page 37
	CONTROL PANEL	**VALID***	**INVALID**		page 37
	AUTO SETUP	**AUTO***	**BUTTON**		page 37
	SIGNAL SEARCH	**ON***	**OFF**		page 37
	INSTALLATION	**FRONT/DESK**	**REAR/DESK**		page 37
		FRONT/CEILING	**REAR/CEILING**		
	HIGHLAND	**OFF**	**ON**		page 38
	TEST PATTERN				page 38
	DETAILED SETUP	**OSD DESIGN**	**TYPE1**	**TYPE2**	page 38
			TYPE3		
		SXGA MODE	**SXGA**	**SXGA+**	
		XGA MODE	**XGA**	**WXGA**	
		BLACKBOARD	**ON***	**OFF**	
		BACK COLOUR	**BLUE***	**BLACK**	
		VOLUME	• Default: 0		
		AUDIO BALANCE	• Default: 0		
		INITIALISE ALL			
SECURITY	**INPUT PASSWORD**	**OFF***	**ON**		page 39
	PASSWORD CHANGE				page 39
	TEXT DISPLAY	**OFF***	**ON**		page 39
	TEXT CHANGE				page 39
NETWORK	**WIRED LAN**				page 40
	WIRELESS LAN				
	NAME CHANGE				
	INPUT PASSWORD				
	PASSWORD CHANGE				
(PT-F100NTE only)	**NETWORK STANDBY**				
	WEB CONTROL				
	LIVE MODE CUT IN				
	STATUS				
	INITIALISE	(See **CD-ROM** contents for detailed information)			

PICTURE menu

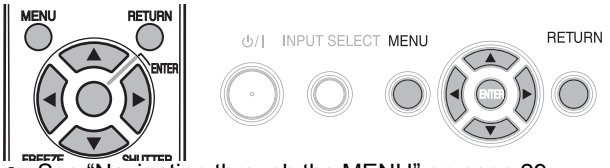

- See “Navigating through the MENU” on page 29.
- See “Main menu and Sub-menu” on page 30.

PICTURE MODE

Depending on the projection environment, you can use these preset parameter settings to optimise image projection. Press ◄ ► to cycle through the options.

NATURAL	Reproduces the original colour of the image
STANDARD	Setting for a general image
DYNAMIC	Bright and sharp setting
BLACKBOARD	Setting for when projecting on a blackboard See “BLACKBOARD” on page 38.

NOTE:
- It may take for a while until the selected mode is stabilised.

CONTRAST

You can adjust the contrast of the projected image. Adjust the **BRIGHTNESS** in advance if necessary.

Lower **Higher**

BRIGHTNESS

You can adjust the brightness of the projected image.

Darker **Brighter**

COLOUR

You can adjust the colour saturation of the projected image.

Lighter **Darker**

TINT

You can adjust the skin tone in the projected image.

More reddish **More greenish**

SHARPNESS

You can adjust the sharpness of the projected image.

Less sharp **More sharp**

COLOUR TEMPERATURE

You can adjust the white balance of the projected image.

- **LOW** More bluish
- **STANDARD** Balanced white
- **HIGH** More reddish

DAYLIGHT VIEW

You can keep the projected image bright and vivid even in well-lit rooms where the ambient light sources cannot be controlled, such as when a door opens or when window coverings fail to block out sunlight.

- **AUTO**: Automatic adjustment
- **ON**: Active
- **OFF**: Deactive

NOTE:
- Do not cover the **ALS** (Ambient Luminance Sensor) of the projector. See “ALS (Ambient Luminance Sensor)” on page 14.
- **AUTO** is not available when **INSTALLATION** setting in **OPTION** menu is set to **REAR/DESK** or **REAR/CEILING**.

DETAILED SETUP

You can perform more detailed image adjustment manually.

For S-VIDEO/VIDEO signals

TV-SYSTEM

When the video signal is changed, the setting switches automatically. You can switch the setting manually to match the video data. Press ◄ ► to cycle through the options.

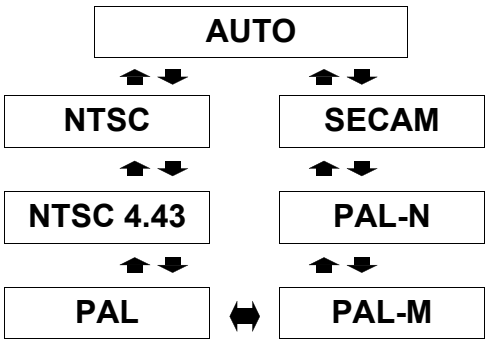

NOTE:
- **AUTO** setting will select from **NTSC**/**NTSC 4.43**/**PAL**/PAL60/**PAL-M**/**PAL-N**/**SECAM**.

STILL MODE

You can reduce the vertical flicker when projecting a still image.
- **OFF**: Deactive
- **ON**: Active

NOTE:
- Set to **OFF** when projecting a moving image.

NOISE REDUCTION

You can switch the automatic noise reduction system on/off. Press ◄ ► to select the required setting.
- **ON**: Automatic noise reduction
- **OFF**: No noise reduction

NOTE:
- Applying noise reduction may affect image quality.

For RGB signals

WHITE BALANCE

You can adjust the white balance more properly in 3 colours temperature by pressing ◄ ►.
- **WHITE BALANCE RED**
- **WHITE BALANCE GREEN**
- **WHITE BALANCE BLUE**

POSITION menu

Remote control **Control panel**

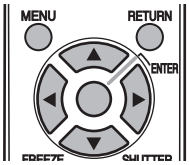

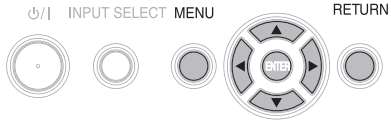

- See “Navigating through the MENU” on page 29.
- See “Main menu and Sub-menu” on page 30.

KEYSTONE

If the projector is aligned non-perpendicularly to the screen, or if the projection screen has an angled surface, you can correct keystone.

Image	Operation
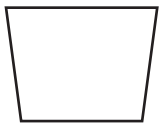	
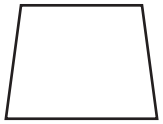	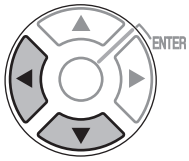

NOTE:
- You can correct the distortion ± 30 degrees from the plane. For a better quality image, installing the projector with a minimum of distortion is recommended.
- Some distortion may be retained for lens shift adjustment.
- The distortion of the **Main menu** screen is not correctable.
- The result of the keystone correction will affect the aspect ratio and the size of the image.

POSITION

You can move the projected image for fine adjustment. Press ◄ ► to move horizontally and ▲ ▼ vertically.

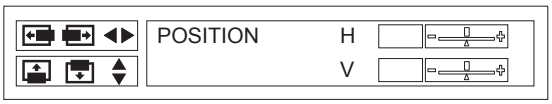

DOT CLOCK

If you have interference patterns of the projected image, which is sometimes referred to as moire or noise, you can minimize it by pressing ◄ ► to adjust the clock frequency.

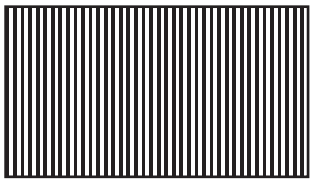

NOTE:
- If the projecting signal’s dot clock frequency is higher than 108 MHz, the adjustment may not make a difference.
- **DOT CLOCK** needs to be adjusted before adjusting the **CLOCK PHASE**.

CLOCK PHASE

If you require further adjustment for the same reason as the **DOT CLOCK** adjustment, you can fine adjust the timing of the clock. Press ◄ ► to adjust.

NOTE:
- If the projecting signal’s dot clock frequency is higher than 108 MHz, the adjustment may not make a difference.
- **CLOCK PHASE** is available with **PC** signals and the following **COMPONENT** connection.

ASPECT

You can switch the aspect ratio manually when needed. Press ◄ ► to cycle through the options.

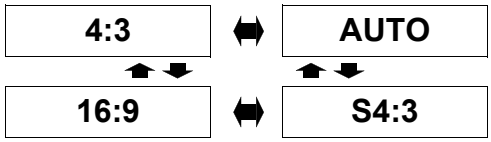

- **4:3**

  The input signal will be projected without any change.

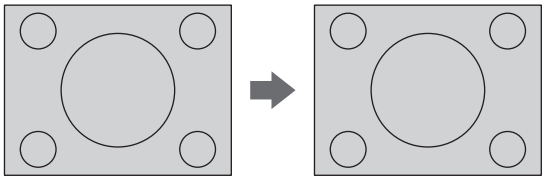

Settings

- **16:9**

  The squeezed signal will be projected in 16:9 ratio.

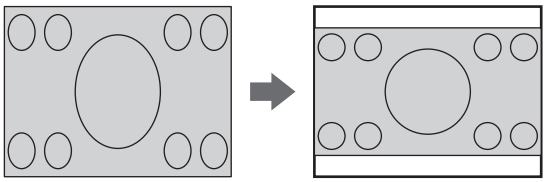

- **S4:3**

  The input signal will be sized down 75 % and projected. **S4:3** mode is effective when projecting 4:3 image on to a 16:9 screen.

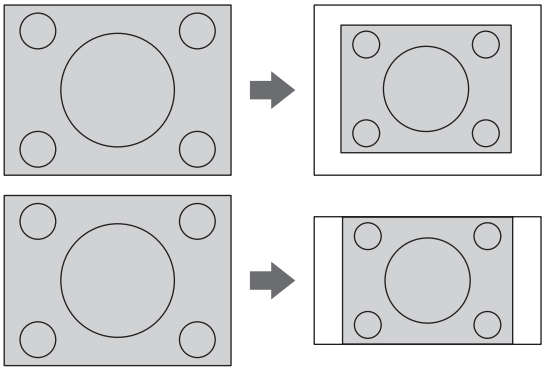

- **AUTO**

  The S1 signal which contains an identifying signal will be detected and automatically project the image in proper ratio.

NOTE:
- If you project an image with an unmatched aspect ratio, the image may distort or some portions may be cropped. Select an aspect ratio which preserves the intention of the image creator.
- The order of **ASPECT** types is defined not only by the input method but also by the input signals. “List of compatible signals” on page 46
- If you project a copyrighted image enlarged or distorted by using **ASPECT** function in commercial use in a public place, such as a restaurant or hotel, you might infringe on the copyright of the creator which is protected by copyright law.

RESIZING

When the input signal resolution is lower than the projector resolution, it will be projected at the projector resolution. You can deactivate the **RESIZING** and project the lower resolution input signal at its original resolution. Press ◄ ► to select the required setting.

- **ON** Active
- **OFF** Deactive

NOTE:
- Usually the recommended setting is **ON**.
- When the **RESIZING** is set to **ON**, the lower resolution input signal may be projected in less quality.

When the RESIZING is set to OFF;
- The size of the image will be projected smaller and you may need to adjust **ZOOM** and **FOCUS**, or the projector position backwards and forwards.
- **DIGITAL ZOOM**, **KEYSTONE** and **INDEX-WINDOW** are not available.

FRAME LOCK

If the projected image is degraded, you can activate **FRAME LOCK** for synchronisation. Press ◄ ► to select the required option.

- **OFF** Deactive
- **ON** Active

NOTE:
- This function is available with **COMPUTER** signals only.

OPTION menu

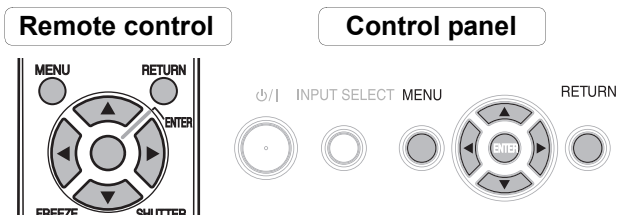

- See “Navigating through the MENU” on page 29.
- See “Main menu and Sub-menu” on page 30.

INPUT GUIDE

When you change the input method, the guidance appears in the upper right corner of the screen. The following display methods are available. Press ◄ ► to cycle through the options.

Options	Function
OFF	Turn off the guidance.
SIMPLE	Display the input method by text. The **INPUT GUIDE** will go out after 5 seconds without any operation.
DETAILED	Display the input method by graphic. The **INPUT GUIDE** will go out after 10 seconds without any operation. If you select any **COMPUTER** terminal which has no signal, the computer connection guidance will be displayed. See “Computer connection guidance” on page 48.

STARTUP LOGO

You can switch the logo on/off that is displayed when starting up the projector. Press ◄ ► to select the required option.

- **ON** Active
- **OFF** Deactive
- **USER** Display the original text

Editing the original text

If you select **USER**, you can display the 2 lines of original text up to 40 characters in 1 line instead of the logo.

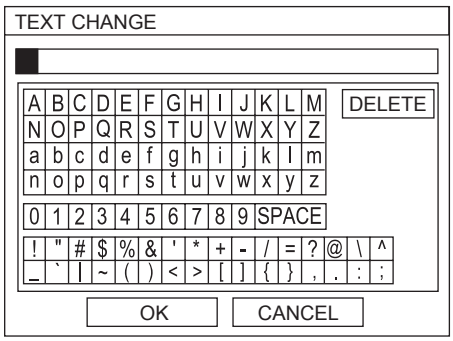

1. Select **USER** and press **ENTER**.
2. Select the required line to enter or edit the original text, and press **ENTER**.
3. Use ▲ ▼ ◄ ► to specify the location of the required character and press **ENTER**.
   - The selected character will be displayed in the box.
   - Select **DELETE** to delete the last entered character and press **ENTER**.
4. Repeat the step 3 until you finish the text to display in a line.
5. Select **OK** and press **ENTER** to set the entered text in a box.
   - Press ▼ and edit the **TEXT2** if you need to, and repeat the step 3 - 5.

COMPUTER2 SELECT

You can switch the function of the **COMPUTER2 IN/ 1 OUT** terminal.

- **INPUT** **COMPUTER2 IN**
- **OUTPUT** **COMPUTER1 OUT**

LAMP RUNTIME

You can check how long the lamp has been used.

NOTE:

- **LAMP RUNTIME** is a relevant matter for lamp replacement timing. See “Replacing the Lamp unit” on page 43.
- When the lamp unit is replaced with the new one (ET-LAF100), the setting will be reset to “0”.

FILTER REMAINING

You can check the remaining amount of the **ARF** (Auto Rolling Filter). The colour of the bar scale is indicating the condition of the **ARF**.

- Yellow — The filter remaining amount is getting low.
- Red — No more remaining.

NOTE:
- See “Replacing the ARF (Auto Rolling Filter)” on page 42.
- After you replace the ARF, **FILTER REMAINING** should be reset to “0” by pressing the **ENTER** button for 3 seconds.

POWER OFF TIMER

You can set the off timer to switch off the **POWER** of the projector after a certain period of time automatically when no signal is detected. Press ◄ ► to select the required period from 15 to 60 minutes at intervals of 5 minutes.

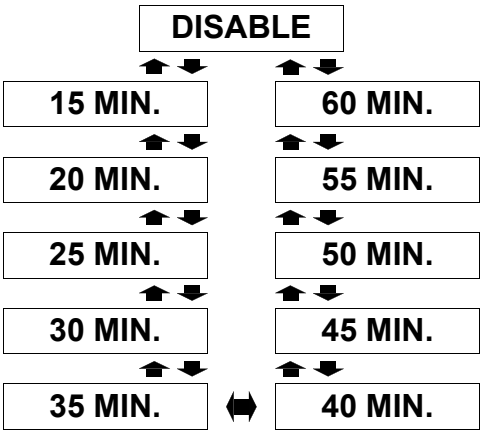

DIRECT POWER ON

You can switch the projector start up status for when the **Mains lead** is connected while the **MAIN POWER** is on, or for when the **MAIN POWER** is switched on while the **Mains lead** is connected. Press ◄ ► to select the required option.

- **OFF** — The projector will start from the standby mode or the projecting mode.
- **ON** — The projector will start from the projecting mode.

NOTE:
- When the projector is started from the projecting mode, pressing the **POWER** button procedure is skippable.

CONTROL PANEL

You can turn off the function of the control panel buttons on the projector body. Press ◄ ► to select the required option.

- **INVALID** — Invalidate the control panel buttons Confirmation screen will be displayed.
- **VALID** — Validate the control panel buttons

AUTO SETUP

You can turn off the **AUTO SETUP** function for when the **COMPUTER** signal is detected.

- **AUTO** — When the projector detect a **COMPUTER** signal, adjust the projected image position automatically for **SIGNAL SEARCH**, **DOT CLOCK** and **CLOCK PHASE**.
- **BUTTON** — Only when the **AUTO SETUP** button is pressed, the projected image position will be adjusted for **DOT CLOCK** and **CLOCK PHASE**. See “Remote control” on page 13.

NOTE:
- Usually the recommended setting is **AUTO**.

SIGNAL SEARCH

You can turn off the auto signal detecting system.

- **ON** — Detect the input signal from the terminals and project the image.
- **OFF** — Deactive

NOTE:
- **SIGNAL SEARCH** is not available when any input signal is projecting.
- Usually the recommended setting is **ON**.

INSTALLATION

When installing the projector, select the projection method according to the projector position. Press ◄ ► to cycle through the options. See “Projection method” on page 17.

FRONT/DESK	Setting on a desk/floor and projecting from front
FRONT/CEILING	Mounting in the ceiling and projecting from front
REAR/DESK	Setting on a desk/floor and projecting from rear
REAR/CEILING	Mounting in the ceiling and projecting from rear

HIGHLAND

If you use the projector at high elevation, the **HIGHLAND** setting need to be **ON** to set the fan speed high. Press ◄ ► to select the required option.

- **OFF** The fan speed is low.
- **ON** The fan speed is high.

NOTE:
- At 1 400 m (4 593 ft) above sea level, the setting must be **ON**.
- The loudness of fan noise depends on the **HIGHLAND** setting.

TEST PATTERN

You can use the 7 different test patterns to adjust the focus of the image. See “Lens shift and positioning” on page 18.

1. Press **ENTER** to display the test pattern 1.
2. Press ▲ ▼ to select the required test pattern.
3. Adjust the focus with the **Focus lever**.
4. Press **MENU** or **RETURN** to return to the previous menu, oar press repeatedly to escape the menu mode.

NOTE:
- When the projector and/or the screen is tilted, adjust the focus at the centre of the image. The upper and lower edge might be out of focus.
- When the image is distorted in keystone, adjust the **KEYSTONE** in **POSITION** menu.

DETAILED SETUP

You can perform more detailed setting in various items.

OSD DESIGN

You can change the background colour of the menu. Press ◄ ► to select the required option.

TYPE1	Semi transparent black
TYPE2	Solid blue
TYPE3	Semi transparent dark blue

SXGA MODE

You can switch the setting between **SXGA** and the larger setting, **SXGA+**. Press ◄ ► to select the required option.

XGA MODE

You can switch the setting between **XGA** and the wider setting, **WXGA**. Press ◄ ► to select the required option.

BLACKBOARD

You can exclude the **BLACKBOARD** in menu items of **PICTURE MODE** in **PICTURE** menu. Press ◄ ► to select the required option.

- **ON** Include the **BLACKBOARD** in menu items.
- **OFF** Exclude the **BLACKBOARD** in menu items.

BACK COLOUR

You can choose a **BLUE** or **BLACK** screen for when the projector is idle. Press ◄ ► to select the required option.

VOLUME

You can adjust the volume of the built-in monaural speaker and **VARIABLE AUDIO OUT** terminal.

- ◄ Decrease
- ► Increase

AUDIO BALANCE

You can adjust to hear the sound played equally through both right and left external stereo speakers, or shift the balance so more sound plays through the left or right side.

- ◄ More sound plays through the left side
- ► More sound plays through the right side

INITIALISE ALL

You can reset all of the customised settings to the factory defaults except **LAMP RUNTIME** and **FILTER REMAINING** menu settings. Press **ENTER** to initialise and restart the projector by pressing the **POWER** button.

SECURITY menu

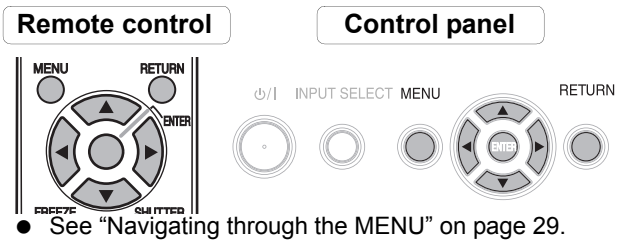

- See “Navigating through the MENU” on page 29.
- See “Main menu and Sub-menu” on page 30.

Entering the SECURITY

Every time when you apply to the **SECURITY** menu, you will be asked to perform the password operation.

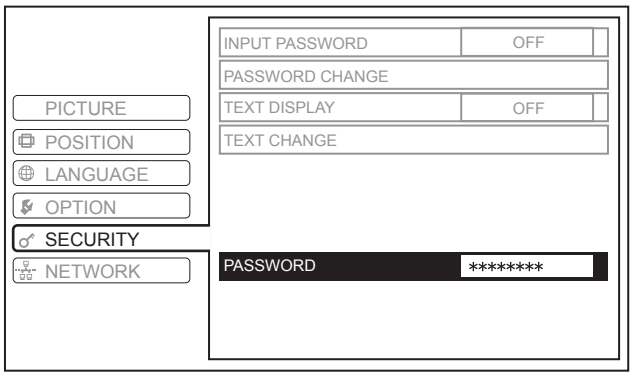

When you apply to the **SECURITY** menu before you change the password to your original, perform to input the following factory default password operation.

- Press ▲ ► ▼ ◄ ▲ ► ▼ ◄ and **ENTER**.

After you change the password

When you apply to the **SECURITY** menu after you change the password to your original in the **PASSWORD CHANGE** menu, input the original password operation.

NOTE:
- The factory default password is valid until you change the password in **PASSWORD CHANGE** menu.
- The entered password operations will appear as asterisks in the box.

INPUT PASSWORD

You can activate the security system and the password operation will be asked to perform when the projecting mode started. Unless you perform the correct password operation, all of the button controls will be disabled except the **POWER** button.

- **OFF** Deactive
- **ON** Active

NOTE:
- When you activated the security system, make sure to change the password to your original for safety.
- The factory default password is valid until you change the password in **PASSWORD CHANGE** menu.

PASSWORD CHANGE

You can change the password operation to your original.

1. Press a series of button operation up to 8 as a password by using ▲ ▼ ◄ and ► buttons.
2. Press **ENTER**.
3. Press the exact same series of button operation you entered in the **NEW** password box for confirmation.
   - If a series of button operation is incorrect, you will be asked to perform again.
4. Press **ENTER**.

NOTE:
- The entered password operations will appear as asterisks in the box.

TEXT DISPLAY

You can set your original text, such as company name or URL information, to display regularly at the bottom of the projected image while projecting.

- **OFF** Deactive
- **ON** Active

TEXT CHANGE

You can enter your original text up to 22 characters for **TEXT DISPLAY**.

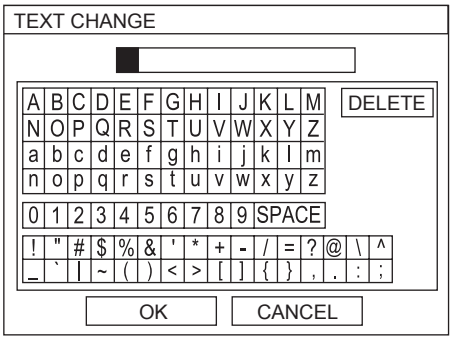

1. Use ▲ ▼ ◄ ► to specify the location of the required character.
2. Press **ENTER**.
   - The selected character will be displayed in the **TEXT CHANGE** box.
3. Repeat until finish your original text.
   - Select **DELETE** to delete the last entered character and press **ENTER**.
4. Select **OK** and press **ENTER** to set the entered text.
   - Select **CANCEL** or press **MENU**/**RETURN** buttons to return to the previous menu.

NETWORK menu

Remote control **Control panel**

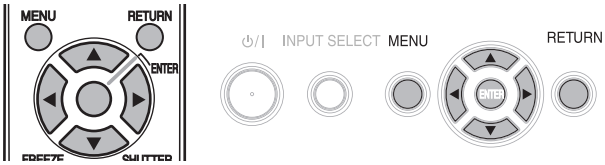

- See “Navigating through the MENU” on page 29.
- See “Main menu and Sub-menu” on page 30.

NOTE:

- The **NETWORK** menu is available only with PT-F100NTE.
- See more detailed instructions in the contents of the **CD-ROM** which is provided with the projector.

Items in NETWORK menu

In **NETWORK** menu, the following items are available.

- **WIRED LAN**
- **WIRELESS LAN**
- **NAME CHANGE**
- **INPUT PASSWORD**
- **PASSWORD CHANGE**
- **NETWORK STANDBY**
- **WEB CONTROL**
- **LIVE MODE CUT IN**
- **STATUS**
- **INITIALISE**

TEMP, LAMP and FILTER Indicators

Managing the indicated problems

If a problem should occur with the projector, the **TEMP**, **LAMP** and/or **FILTER** indicators will inform you. Manage the indicated problems as follow.

1. Confirm the status of all indicators and projector, and switch off the projector in proper way.
2. Find out the cause of the problem by status of the **TEMP**, **LAMP** and/or **FILTER** indicators.
3. Follow the instruction for each indication below and solve the problem.
4. Turn on the projector in the correct way and confirm the indicator is not indicating a problem any longer.

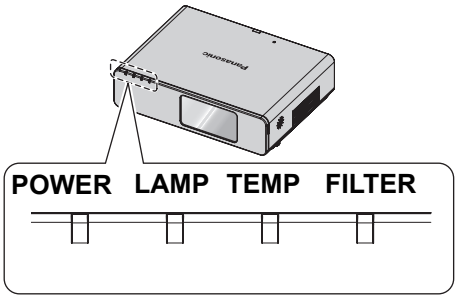

NOTE:
- If no problem is found or the problem remains, do not turn on the projector. Instead contact an Authorised Service Centre.

LAMP indicator

Indicator	● Illuminating **RED**	● Flashing **RED**		
Problem	**LAMP RUNTIME** has reached 2 800 hours.	**LAMP** circuit failure, abnormal function or **Lamp unit** is damaged.		
Cause	**Lamp unit** will run out soon and needs to be replaced.	The **MAIN POWER** is switched on again before the **Lamp unit** is cooled enough.	**LAMP** circuit failure, abnormal function.	**Lamp unit** is damaged.
Remedy	See “Replacing the Lamp unit” on page 43.	Let the **Lamp unit** cool down and turn on the **MAIN POWER**.	Contact an Authorised Service Centre.	See “Replacing the Lamp unit” on page 43.

TEMP indicator

Indicator	● Illuminating **RED** and still projecting ● Flashing **RED** and **POWER** is turned off			
Problem	The temperature inside and/or outside the projector is abnormally high.			
Cause	The ventilation openings are covered.	The room temperature is too high.	The **ARF** is excessively dirty and the ventilation is poor.	The projector is located at high elevations (above 1 400 m).
Remedy	Remove the object(s) from the ventilation openings or clear around the projector.	Reinstall the t a temperature controlled place. See page 16.	Replace the **ARF** in the proper method. See page 42.	Turn on the projector*1 and set the **HIGHLAND** to **ON**. See page 38.

*1. The projector will perform only 2 minutes with OFF setting at high elevation.

FILTER indicator

When the **ARF** indicator is flashing **GREEN**, the **ARF** is normally rolling up.

Indicator	● Illuminating **RED**	● Flashing **RED**	● Illuminating **ORANGE**	● Flashing **ORANGE**
Problem	**FILTER REMAINING** has turned red. See page 37.	The projector cannot detect the **ARF**.	The **ARF** cannot operate properly.	**FILTER REMAINING** has turned yellow. See page 37.
Cause	**ARF** has been run out.	**ARF** is not attached.	Foreign object is blocking the **ARF** operation.	**ARF** is running out.
Remedy	See “Replacing the ARF (Auto Rolling Filter)” on page 42.	Attach the **ARF**.	Remove the foreign object or contact an Authorised Service Centre.	Prepare the **ARF** for replacement.

Care and Replacement

Cleaning the projector

Before cleaning the projector

- Switch off the **MAIN POWER** and disconnect the mains plug from the mains socket.
- Unplug all the cables from the projector.

Cleaning the outer surface of the projector

Wipe off dirt and dust gently with a soft cloth.

- If it is difficult to remove the dirt, soak a cloth in a neutral detergent diluted with water, wring the cloth well and then wipe the projector. Dry off the projector with dry cloth.
- If you use a chemical treated wipe, follow the instructions supplied with it.

Cleaning the lens and front glass surface

Wipe off dirt and dust gently with a lint-free cloth.

- Make sure no dirt or dust remains on the surface of the lens. It will be enlarged and projected onto a screen.

Replacing the ARF (Auto Rolling Filter)

Before replacing the ARF

- Switch off the **MAIN POWER** and disconnect the mains plug from the mains socket.
- Prepare a Phillips-head screw driver.
- Contact an Authorised Service Centre to purchase a replacement **ARF** (ET-RFF100).

When to replace the ARF

ARF is consumable product and effects on ventilation. **ARF** indicator will inform you of the replacement timing. You can check the remaining amount of the **ARF** in **FILTER REMAINING** menu.

NOTE:

- See “FILTER REMAINING” on page 37.
- See “FILTER indicator” on page 41.

Replacement procedure

1. Turn the projector upside down and place it gently on a soft cloth.
2. Use a Phillips-head screwdriver to loosen 2 **ARF cover** fixing screws until the screws turn freely and remove the **ARF cover**.
3. Use a Phillips-head screwdriver to loosen an **ARF** fixing screws and release the clamp, then slightly slide up the used **ARF** to remove.
4. Insert the new **ARF** into the compartment in correct direction and slightly push down until it clicks.
5. Tighten the **ARF** fixing screws securely with a Phillips-head screwdriver.
6. Attach the **ARF cover** and tighten the **ARF cover** fixing screws securely with a Phillips-head screwdriver.
7. Turn on the projector and reset **FILTER REMAINING** to “0”. See “FILTER REMAINING” on page 37.

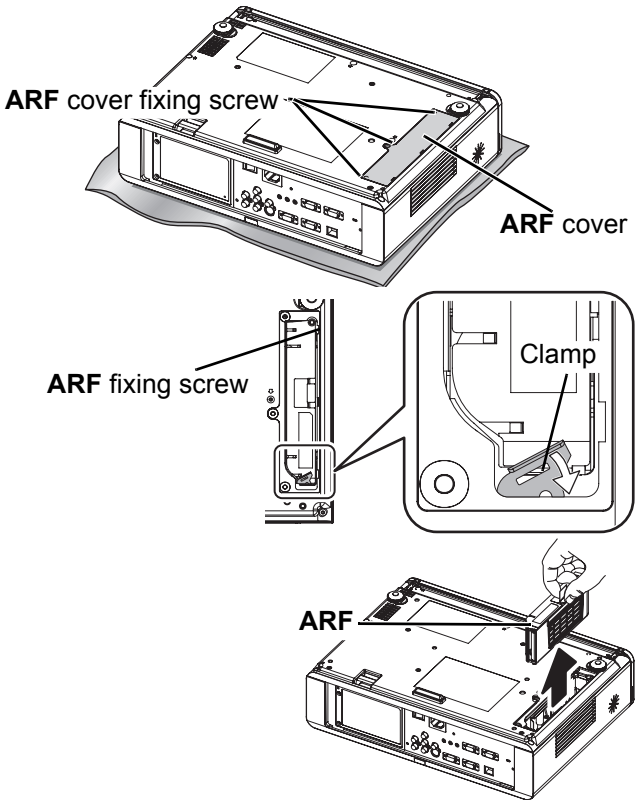

NOTE:

- If the **ARF** and/or **ARF cover** are attached incorrectly, the projector may not be turned on.
- Do not switch the power on while the **ARF cover** removed.

Maintenance

Replacing the Lamp unit

Before replacing the Lamp unit

- Switch off the **MAIN POWER** and disconnect the mains plug from the mains socket.
- Make sure the **Lamp unit** and the surroundings are cooled enough.
- Prepare a Phillips-head screwdriver.
- Contact an Authorised Service Centre to purchase a replacement **Lamp unit** (ET-LAF100).
- When the projector is mounted in the ceiling, do not work directly under the projector or put your face closer to the projector.

NOTE:
- Prior to replacing the lamp unit, allow it to cool down to prevent the risk of burns, damage and other hazards.
- Do not attempt replacement with an unauthorised lamp unit.

When to replace the Lamp unit

The **Lamp unit** is consumable and the brightness decreases by duration of usage. The **LAMP** indicator will inform you of the replacement timing at 2 800 hours, and at 3 000 hours, the projector will be turned off. Those figures are rough guidance and might be shortened by the usage conditions, characteristics of the **Lamp unit**, environmental conditions, and so on. You can check the duration of usage time using **LAMP RUNTIME** in the **OPTION** menu.

Indication	On screen REPLACE LAMP	**LAMP** indicator LAMP
Over 2 800 hours	"**REPLACEMENT LAMP**" is displayed on the upper left of the screen for 30 seconds.	Illuminates **RED**.
Over 3 000 hours	"**REPLACEMENT LAMP**" is displayed on the upper left of the screen, and it will stay until you respond. To clear the screen, press any button.	

NOTE:
- The guide times, 2 800 and 3 000 hours, are rough estimates based on certain conditions and is not a guaranteed time.
- For more information about the **Lamp unit**, such as guaranteed time, see the instructions which is provided with the **Lamp unit**.
- If the lamp usage time has passed 3 000 hours, the projector will switch to standby mode after approximately 10 minutes of operation.

Replacement procedure

Removing and replacing the lamp unit

1. Use a Phillips-head screwdriver to loosen the 3 **Lamp unit cover** fixing screws on the back of the projector until the screws turn freely, and remove the **Lamp unit cover**.

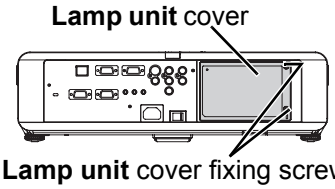

2. Use a Phillips-head screwdriver to loosen the 2 **Lamp unit** fixing screws.
3. Hold the handles of the **Lamp unit** and release the lamp unit lock.
4. Pull the used **Lamp unit** gently from the projector.

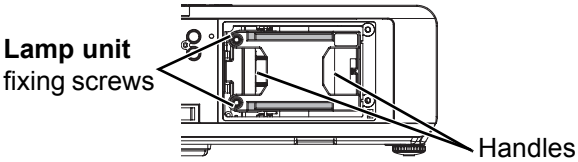

5. Replace the new **Lamp unit** in correct direction.

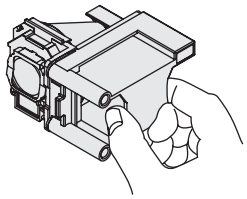

6. Press in the **Lamp unit** until it clicks and make sure the unit is installed securely.
7. Tighten the 2 **Lamp unit** fixing screws securely with a Phillips-head screwdriver.

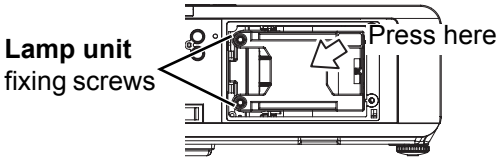

8. Attach the **Lamp unit cover** and tighten the 3 **Lamp unit cover** fixing screws securely with a Phillips-head screwdriver.

Ceiling mount bracket safeguards

The projector and the ceiling mount bracket are designed sufficiently safety though, make sure the safety cable provided with the projector is installed and attached to the bottom of the projector when mounting in the ceiling for safety and security.

NOTE:
- Even if it is guarantee period, the manufacturer is not responsible for any hazard or damage caused by using a ceiling mount bracket which is not purchased from an authorised distributors, or environmental conditions.
- Make sure to use a torque driver and do not use an electrical screwdriver or an impact screwdriver.
- Installation work of the ceiling mount bracket should only be carried by a qualified technician.
- Remove an unused ceiling mount bracket promptly.

Installing the safety cable

1. Install the ceiling mount bracket according to the installation instructions.
2. Loop the security cable around the ceiling mount bracket with less slack.
   - Lace the cable of the end with a latch through the loop on the other end of the cable.
3. Attach the latch on to the bottom of the projector with a provided screw.
   - Torque: 125±20 CN·m

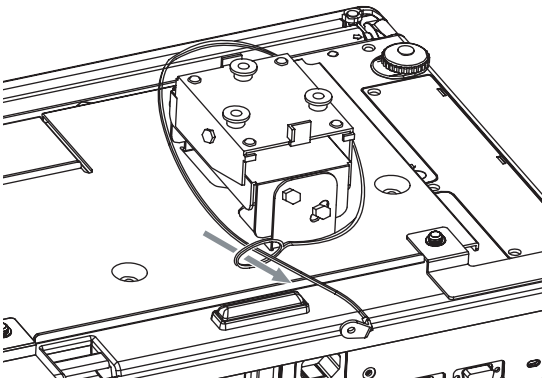

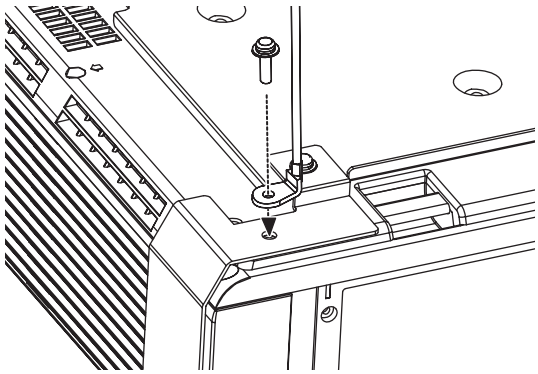

Troubleshooting

Should any problem persist, contact your dealer.

Problem	Cause	Reference page
Power does not turn on.	● The mains lead may not be connected. ● The **MAIN POWER** switch is turned off. ● No electric supply is at the mains socket. ● **TEMP** indicator is lit or flashes. ● **LAMP** indicator is lit or flashes. ● The lamp unit cover has not been securely installed. ● The circuit breakers have tripped.	22 23 22 41 41 44 -
No picture appears.	● The video signal input source may not be connected to a terminal properly. ● The input selection setting may not be correct. ● The **BRIGHTNESS** adjustment setting may be at the minimum setting. ● The **SHUTTER** function may be in use.	21 26 32 27
The picture is fuzzy.	● The lens focus may not have been set correctly. ● The projector may not be at the correct distance from the screen. ● The lens may be dirty. ● The projector may be tilted too much.	18 16 11 18
The colour is pale or greyish.	● **COLOUR** or **TINT** adjustment may be incorrect. ● The input source which is connected to the projector may not be adjusted correctly.	32 30
No sound can be heard from the internal speaker.	● The audio signal source may not be connected properly. ● A cable may be connected to the **VARIABLE AUDIO OUT** terminal. ● The volume adjustment may be at the lowest possible setting.	20 15 28
The control buttons of the projector do not operate.	● **CONTROL PANEL** in **OPTION** menu is invalidated. If you have a loss of the **Remote control** while the **CONTROL PANEL** is invalidated, press and hold the **MENU** button for 2 seconds with pressing the **ENTER** button.	37
The Remote control does not operate.	● The batteries may be weak. ● The batteries may not have been inserted correctly. ● The remote control signal receptor on the projector may be obstructed. ● The remote control unit may be out of the operation range.	- 15 25 25
The picture does not display correctly.	● The signal format (**TV-SYSTEM**) may not have been set correctly. ● There may be a problem with the VCR or other signal source. ● A signal which is not compatible with the projector is being input.	33 - 46
Picture from a computer does not appear.	● The cable may be longer than the optional cable. ● The external video output from a laptop computer may not be correct. (You may be able to change the external output settings by pressing the [Fn] + [F3] or [Fn] + [F10] keys simultaneously. The actual method varies depending on the type of computer; refer to the documentation provided with your computer for further details.) ● **COMPUTER2 SELECT** setting in **OPTION** menu is not correct.	- 48 36

Technical Information

List of compatible signals

Mode	Display resolution (dots)*1	Scanning frequency		Dot clock frequency (MHz)	Picture quality*2	Terminals
		H (kHz)	V (kHz)			
NTSC/NTSC 4.43/ PAL-M/PAL60	720 x 480i	15.7	59.9		A	VIDEO/S-VIDEO
PAL/PAL-N/SECAM	720 x 576i	15.6	50.0		A	
480i	720 x 480i	15.7	59.9	13.5	A	COMPONENT/ COMPUTER
576i	720 x 576i	15.6	50.0	13.5	A	
480p	720 x 483	31.5	59.9	27.0	A	
576p	720 x 576	31.3	50.0	27.0	A	
1 080/60i	1 920 x 1 080i	33.8	60.0	74.3	A	
1 080/50i	1 920 x 1 080i	28.1	50.0	74.3	A	
720/60p	1 280 x 720	45.0	60.0	74.3	A	COMPONENT
720/50p	1 280 x 720	37.5	50.0	74.3	A	
VESA	640 x 400	31.5	70.1	25.2	A	COMPUTER
	640 x 400	37.9	85.1	31.5	A	
VGA480	640 x 480	31.5	59.9	25.2	A	
	640 x 480	35.0	66.7	30.2	A	
	640 x 480	37.9	72.8	31.5	A	
	640 x 480	37.5	75.0	31.5	A	
	640 x 480	43.3	85.0	36.0	A	
SVGA	800 x 600	35.2	56.3	36.0	A	
	800 x 600	37.9	60.3	40.0	A	
	800 x 600	48.1	72.2	50.0	A	
	800 x 600	46.9	75.0	49.5	A	
	800 x 600	53.7	85.1	56.3	A	
MAC	832 x 624	49.7	74.6	57.3	A	
	1 152 x 870	68.7	75.1	100.0	A	
XGA	1 024 x 768	48.4	60.0	65.0	AA	
	1 024 x 768	56.5	70.1	75.0	AA	
	1 024 x 768	60.0	75.0	78.8	AA	
	1 024 x 768	68.7	85.0	94.5	AA	
MXGA	1 152 x 864	64.0	71.2	94.2	A	
	1 152 x 864	67.5	74.9	108.0	A	
	1 152 x 864	76.7	85.0	121.5	A	
MSXGA	1 280 x 960	60.0	60.0	108.0	A	
SXGA	1 280 x 1 024	64.0	60.0	108.0	A	
	1 280 x 1 024	80.0	75.0	135.0	A	
	1 280 x 1 024	91.1	85.0	157.5	A	
SXGA60+	1 400 x 1 050	64.0	60.0	108	A	
	1 400 x 1 050	65.1	59.9	122.4	A	
UXGA	1 600 x 1 200	75.0	60.0	162.0	A	
WXGA	1 280 x 768	47.8	59.9	79.5	A	
	1 280 x 800	49.1	60.2	69.1	A	
	1 280 x 800	49.7	59.8	83.5	A	
WXGA+	1 440 x 900	55.9	59.9	106.5	A	

*1. The “i” appearing after the resolution indicates an interlaced signal.
*2. The following symbols are used to indicate picture quality.
AA Maximum picture quality can be obtained.
A Signals are converted by the image processing circuit before picture is projected.

Serial terminal

The serial connector which is on the connector panel of the projector conforms to the RS-232C interface specification, so that the projector can be controlled by a personal computer which is connected to this connecter.

Connection

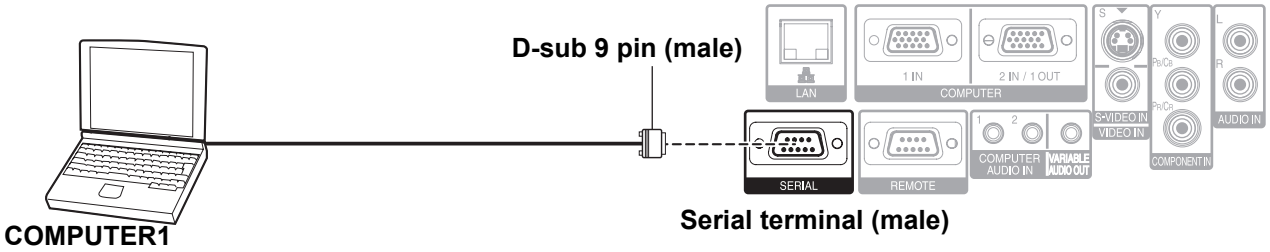

Pin assignments and signal names

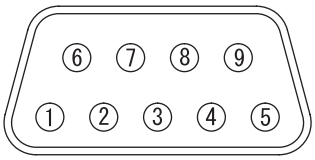

Pin No.	Signal name	Contents
①		NC
②	TXD	Transmitted data
③	RXD	Received data
④		NC
⑤	GND	Earth
⑥		NC
⑦	RTS	Connected internally
⑧	CTS	
⑨		NC

Communication settings

Signal level	RS-232C	**Character length**	8 bits
Sync. method	Asynchronous	**Stop bit**	1 bit
Baud rate	9 600 bps	**X parameter**	None
Parity	None	**S parameter**	None

Basic format

STX	Command	:	Parameter	ETX
Start byte (02h)	3 bytes	1 byte	1 byte - 4 bytes	End (03h)

The data streaming from the computer will start with STX, and proceed to Command, Parameter and end with ETX. You can add the required parameter.

- The projector can not receive any command for 10 seconds after the lamp is switched on. Wait 10 seconds before sending the command.
- If sending multiple commands, check that a response has been received from the projector for one command before sending the next command.
- When a command which does not require parameters to be sent, the colon (:) is not required.
- If an incorrect command is sent from the personal computer, the ER401 command will be sent from the projector to the personal computer.

Cable specifications

(When connected to a personal computer)

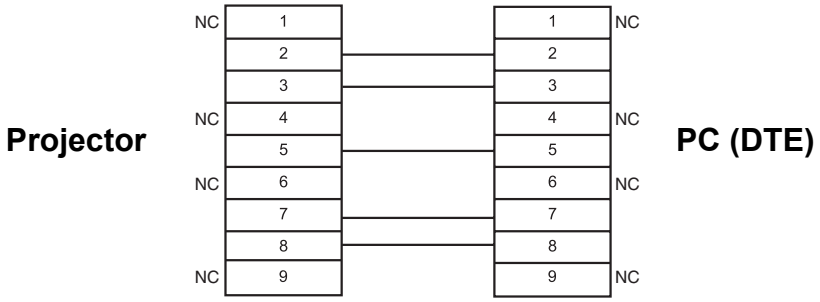

Control commands

Command	Control contents	Remarks
PON	Power ON	In standby mode, all commands other than the PON command are ignored. ● The PON command is ignored during lamp ON control. If a PON command is received while the cooling fan is operating after the lamp has switched off, the lamp is not turned back on again straight away in order to protect the lamp.
POF	Power OFF	
AVL	Volume	Parameter 000 - 063 (Adjustment value 0 - 63)
IIS	INPUT	Parameter: VID = VIDEO IN SVD = S-VIDEO IN RG1 = COMPUTER1 RG2 = COMPUTER2 NWP = WIRELESS (PT-F100NTE only)
Q$S	Lamp condition query	Call back 0 = Standby 2 = Lamp ON 1 = Lamp ON control active 3 = Lamp OFF control active
OSH	SHUTTER	Turning off the projection temporarily. Send the command to switch between ON and OFF. Do not send the command consecutively.

Computer connection guidance

You can switch the signals which to output from the **COMPUTER1 OUT** terminal by pressing the computer key command. The key commands are depend on the manufactures. If you select the computer terminals which has no signals while the **INPUT GUIDE** is set to **DETAILED**, the computer connection guidance will be displayed.

Manufacturer	Key command	Manufacturer	Key command	Manufacturer	Key command
Panasonic NEC	Fn + F3	TOSHIBA SHARP HP	Fn + F5	IBM SONY	Fn + F7
				Apple	F7
FUJITSU	Fn + F10	EPSON DELL	Fn + F8	Other	Fn + □/⧈

NOTE:
- The computer connection guidance will disappear after 5 minutes.
- Please refer the instructions which provided with the computers for more detailed information.

REMOTE terminal

You can remotely operate the projector from the outside the **Remote control** range by connecting to the **REMOTE** terminal.

Pin assignments and signal names

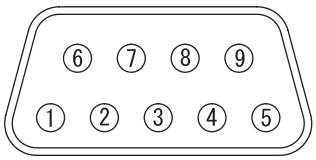

Pin No.	Signal name	Contents
①	GND	Ground
②	POWER	POWER ON
③	INPUT SEL3	Select input signal 3
④		NC
⑤	INPUT SEL1	Select input signal 1
⑥	INPUT SEL2	Select input signal 2
⑦		Connect internally
⑧		
⑨	ENABLE	Control by external contact

LAMP switching

Pin No.	Settings	
② - ①	Short	Open
Operation	On	Off

Switching input signals

Pin No.	Settings					
③ - ①	Open	Open	Short	Short	Short	Open
⑤ - ①	Open	Short	Open	Open	Short	Short
⑥ - ①	Open	Open	Short	Open	Open	Short
Input signal	COMPUTER1	COMPUTER2	COMPONENT	VIDEO	S-VIDEO	NETWORK

NOTE:

- When pin ① and pin ⑨ are short-circuited, the buttons on the projector's control panel, **POWER** and **INPUT SELECT** buttons on the **Remote control** cannot be used. In addition, the RS-232C commands and network functions that correspond to these functions cannot be used either.
- While pin ⑨ is "Open", do not short-circuit pin ①, ②, ③, ⑤ and ⑥. The projector would reject all the signals from the **Remote control**.

Specifications

Power supply		AC 100 - 240 V 50 Hz/60 Hz	
Power consumption		330 W During standby (when fan is stopped): 3 W	
Amps		3.9 A - 1.4 A	
LCD panel	**Panel size (diagonal)**	0.7 type (17.78 mm)	
	Aspect ratio	4 : 3	
	Display method	3 transparent LCD panels (RGB)	
	Drive method	Active matrix method	
	Pixels	786 432 (1 024 x 768) x 3 panels	
Lens		Manual zoom (2 x)/Manual focus F 1.7 - 2.6, f 21.6 mm - 43.0 mm	
Lamp		UHM lamp (250 W)	
Luminosity		3 200 lm	
Operating environment		Temperature	0 °C - 40 °C (32 °F - 104 °F) When the **HIGHLAND** (page 38) is set to ON: 0 °C - 35 °C (32 °F - 95 °F)
		Humidity	20% - 80% (no condensation)
Scanning frequency*1 (for RGB signal)	**Horizontal scanning frequency**	15 kHz - 91 kHz	
	Vertical scanning frequency	50 Hz - 85 Hz	
	Dot clock frequency	Less than 108 MHz	
COMPONENT (YPBPR) signals		480i, 480p, 576i, 576p, 720/50p, 720/60p, 1 080/50i, 1 080/60i,	
Colour system		7 (NTSC/NTSC 4.43/PAL/PAL-M/PAL-N/PAL60/SECAM)	
Projection size		33" - 300" (838.2 mm - 7 620 mm)	
Throw distance		1.2 m - 18.1 m (3'11" - 59'4")	
Screen aspect ratio		4 : 3	
Installation		FRONT/DESK, FRONT/CEILING, REAR/DESK, REAR/CEILING (Menu selection method)	
Speaker		1 piece	4 cm (1-9/16")
Max. useable volume output		3.0 W	

*1. See “List of compatible signals” on page 46 for available signals.

Terminals	S-VIDEO IN	Single - line, Mini DIN 4p Y: 1.0 V [p-p], C: 0.286 V [p-p], 75 Ω	
	VIDEO IN	Single - line, RCA pin jack 1.0 V [p-p], 75Ω	
	COMPONENT1 IN	Single - line, D - sub HD 15-pin (female)	
		R.G.B.	0.7 V [p-p], 75 Ω
		HD, VD/SYNC	TTL high impedance, automatic positive/negative polarity compatible
	COMPUTER2 IN/ 1 OUT	Single - line, D - sub HD 15-pin (female) Selectable for input and output by menu operation.	
		R.G.B.	0.7 V [p-p], 75 Ω
		HD, VD/SYNC	TTL high impedance, automatic positive/negative polarity compatible
	COMPONENT IN	Y, PB/CB, PR/CR	Single - line, RCA pin jack x 3
		Y:	1.0 V [p-p] (including sync), 75 Ω
		PB/CB, (PR/CR)	0.7 V [p-p], 75 Ω
	AUDIO IN	Single - line, 0.5V [rms], RCA pin jack x 2 (L - R)	
	COMPUTER AUDIO IN	Single - line, 0.5V [rms], M3 jack (Stereo MINI)	
	VARIABLE AUDIO OUT	Single - line, 0.5V [rms], M3 jack (Stereo MINI) Monitor output/stereo compatible 0 V [rms] - 2.0 V [rms] (variable)	
	SERIAL	D-sub 9-pin RS-232C compatible	
	REMOTE	D-sub 9-pin	For external control
	LAN (RJ-45)	Single - line, For network connection 10 Base-T/100Base-TX/1000Base-T	
Wireless LAN	Compatible	IEEE802.11b/IEEE802.11g (Wireless LAN standard protocol)	
	Wireless channel	IEEE802.11b/IEEE802.11g: 1 - 13 channels	
	Distance	30 m (98'5") Depends on the usage environment	
Cabinet		Moulded plastic (PC+ABS)	
Dimensions		Width	432 mm (17")
		Height	124.5 mm (4 - 7/8")
		Length	319 mm (12 - 17/32")
Weight		6.0 kg (13.2 lbs.)	
Certifications		EN60950-1, EN55022, EN61000-3-2, EN61000-3-3, EN55024	
Remote control	Power supply	3 V DC (AA battery x 2)	
	Operating range	Approx. 15 m (49'2") (when operated directly in front of signal receptor)	
	Weight	117 g (4.2 ozs.) (including batteries)	
	Dimensions	Width	48 mm (1 - 7/8")
		Length	163 mm (6 - 13/32")
		Height	24.5 mm (-15/16") (not including surface projection parts)
Options	Ceiling bracket	ET-PKF100H/ET-PKF100S	
	AV Cables	TY-SC10CP	

Screen size and throw distance for 16:9 aspect ratio

Projection size (16 : 9)			Throw distance (L)	
Screen Diagonal (SD)	Screen height (SH)	Screen width (SW)	Minimum distance (LW)	Maximum distance (LT)
(0.84 m) 33"	0.41 m (1'4")	0.73 m (2'4")		2.1 m (6'10")
(1.02 m) 40"	0.50 m (1'7")	0.89 m (2'11")	1.3 m (4'3")	2.6 m (8'6")
(1.27 m) 50"	0.62 m (2')	1.11 m (3'7")	1.6 m (5'2")	3.2 m (10'5")
(1.52 m) 60"	0.75 m (2'5")	1.33 m (4'4")	1.9 m (6'2")	3.9 m (12'9")
(1.78 m) 70"	0.87 m (2'10")	1.55 m (5'1")	2.3 m (7'6")	4.6 m (15'1")
(2.03 m) 80"	1.00 m (3'3")	1.77 m (5'9")	2.6 m (8'6")	5.2 m (17')
(2.29 m) 90"	1.12 m (3'8")	1.99 m (6'6")	2.9 m (9'6")	5.9 m (19'4")
(2.54 m) 100"	1.25 m (4'1")	2.21 m (7'3")	3.3 m (10'9")	6.5 m (21'3")
(3.05 m) 120"	1.49 m (4'10")	2.66 m (8'8")	3.9 m (12'9")	7.9 m (25'11")
(3.81 m) 150"	1.87 m (6'1")	3.32 m (10'10")	4.9 m (16')	9.8 m (32'1")
(5.08 m) 200"	2.49 m (8'2")	4.43 m (14'6")	6.6 m (21'7")	13.1 m (42'11")
(6.37 m) 250"	3.11 m (10'2")	5.53 m (18'1")	8.3 m (27'2")	16.4 m (53'9")
(7.62 m) 300"	3.74 m (12'3")	6.64 m (21'9")	9.9 m (32'5")	19.7 m (64'7")

* All measurements above are approximate and may differ slightly from the actual measurements.

Calculation methods for screen dimensions

You can calculate more detailed screen dimension from the screen diagonal.

SW = SD x 0.0221 **SH = SD x 0.0125** **Unit: m**

LW = 0.0332 x SD - 0.049 **LT = 0.066 x SD - 0.055**

* The results above are approximate and may differ slightly from the actual measurements.

Dimensions

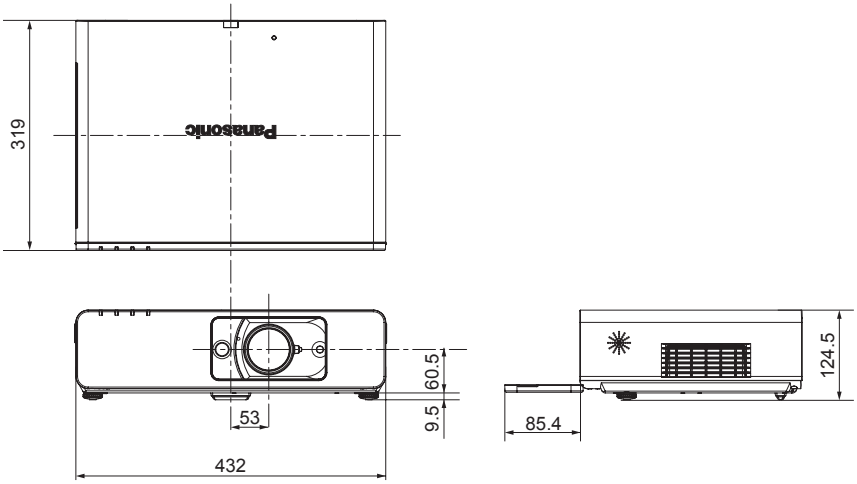

Trademark acknowledgements

- VGA and XGA are trademarks of International Business Machines Corporation.
- S-VGA is a registered trademark of the Video Electronics Standards Association.
- HDMI, the HDMI logo and High-Definition Multimedia Interface are trademarks or registered trademarks of HDMI Licensing LLC.
- The font used in the on-screen displays is a Ricoh bitmap font, which is manufactured and sold by Ricoh Company, Ltd.

All other trademarks are the property of the various trademark owners.

These Operating Instructions are printed on recycled paper.

Index

A

AC IN 15
Accessories 11
Air exhaust port 15
Air intake port 14
ALS (Ambient Luminance Sensor) 14
ARF (Auto Rolling Filter)
- Compartment 15
- FILTER indicator 14
- FILTER indicator status 41
- FILTER REMAINING 37
- Replacing 42

ASPECT 34
AUDIO BALANCE 38
AUDIO IN 15
AUTO SETUP
- Menu 37
- Remote control 25
- Remote control button 13

B

BACK COLOUR 38
Battery compartment 13
BLACKBOARD 38
BRIGHTNESS 32

C

Calculation methods
- 16:9 52
- 4:3 16

CD-ROM
- Accessories 11

Cleaning 42
CLOCK PHASE 34
COLOUR 32
COLOUR TEMPERATURE 32
COMPONENT IN 15
COMPUTER
- Connection guidance 48
- Remote control 26
- Remote control button 13

COMPUTER AUDIO IN 15
COMPUTER SEARCH 13
COMPUTER1 IN 15
COMPUTER2 IN/1 OUT 15
COMPUTER2 SELECT 36
Connections 20
CONTRAST 32
CONTROL PANEL 37

D

DAYLIGHT VIEW 32
DEFAULT
- Remote control 27
- Remote control button 13

DETAILED SETUP
- OPTION menu 38
- PICTURE menu 33

DIGITAL ZOOM
- Remote control 28
- Remote control button 13

Dimensions 53
Direct power off 22
DIRECT POWER ON
- Function 22
- Menu 37

DOT CLOCK 34

E

ENTER
- Control panel button 14
- Remote control button 13

F

FILTER REMAINING 37
Focus lever 14, 24
FRAME LOCK 35
FREEZE
- Remote control 27
- Remote control button 13

Front leg adjusters 15, 17, 24
Front panel cover 14

H

Hand strap 13
HIGHLAND 38

I

INDEX-WINDOW
- Remote control 27
- Remote control button 13

INITIALISE ALL 38
INPUT GUIDE 36
INPUT PASSWORD 39
INPUT SELECT
- Control panel button 14
- Remote control button 13
- Selecting 24, 26

INSTALLATION
- Menu 37
- Projection method 17

K

KEYSTONE 34

L

LAMP
- Indicator 14
- Indicator status 41
- LAMP RUNTIME 36
- Lamp unit compartment 15
- Replacing 43

LAN 15
LANGUAGE 30
LASER
- Remote control 26
- Remote control button 13

Lens shift lever 14, 18, 24
Lever
- Focus lever 14
- Lens shift lever 14
- Zoom lever 14

M

Mains lead
- Accessories 11
- Connecting 22

Appendix

MENU
Control panel button 14
Main menu 30
Navigation 29
Remote control button 13

N

Navigation buttons
Control panel button 14
Remote control button 13
NETWORK
Remote control 26
Remote control button 13
NOISE REDUCTION 33

O

OPTION menu 36
OSD DESIGN 38

P

PAGE 13
PASSWORD CHANGE 39
PICTURE menu 32
PICTURE MODE 32
POSITION 34
POSITION menu 34
POWER
Control panel 14
Indicator 14
Indicator status 22
Remote control button 13
POWER OFF TIMER 37
Projection lens 14

R

REMOTE 15
LAMP switching 49
Pin assignments 49
Switching input signals 49
Remote control
Accessories 11
Indicator 13
Signal emitter 13
Signal receptor 14
RESIZING 35
RETURN
Control panel button 14
Remote control button 13

S

Safety cable
Accessories 11
Attachment point 15
Safeguards 44
Screen size
16:9 52
4:3 16
Security lock 15
SECURITY menu 39
SERIAL 15
Basic format 47
Cable specifications 48
Communication settings 47
Connection 47
Control commands 48
Pin assignments 47
SHARPNESS 32
SHUTTER
Remote control 27
Remote control button 13
SIGNAL SEARCH 37
Speaker 14
Specifications 50
STARTUP LOGO 36
STILL MODE 33
Sub-menu 30
S-VIDEO IN 15
SXGA MODE 38

T

Technical Information 46
TEMP
Indicator 14
Indicator status 41
TEST PATTERN 38
TEXT CHANGE 39
TEXT DISPLAY 39
Throw distance
16:9 52
4:3 16
Throwing angle 17
TINT 32
Troubleshooting 45
TV-SYSTEM 33

V

VARIABLE AUDIO OUT 15
VIDEO
Remote control 26
Remote control button 13
VIDEO IN 15
VOLUME 38
Remote control 28
Remote control button 13

W

WHITE BALANCE 33

X

XGA MODE 38

Z

Zoom lever 14, 24

Matsushita Electric Industrial Co., Ltd.
Web Site: http://panasonic.net

© 2007 Matsushita Electric Industrial Co., Ltd. All Rights Reserved.

Printed in Japan
S0207-1037B