myprojectorlamps.com

The most trusted, dependable name in projector lamp sales.

http://www.myprojectorlamps.com

http://www.myprojectorlamps.ca

http://www.myprojectorlamps.eu

The following projector manual has not been modified or altered in any way.

Operating Instructions

D-ILA™ PROJECTOR

Model No. PT-D995U

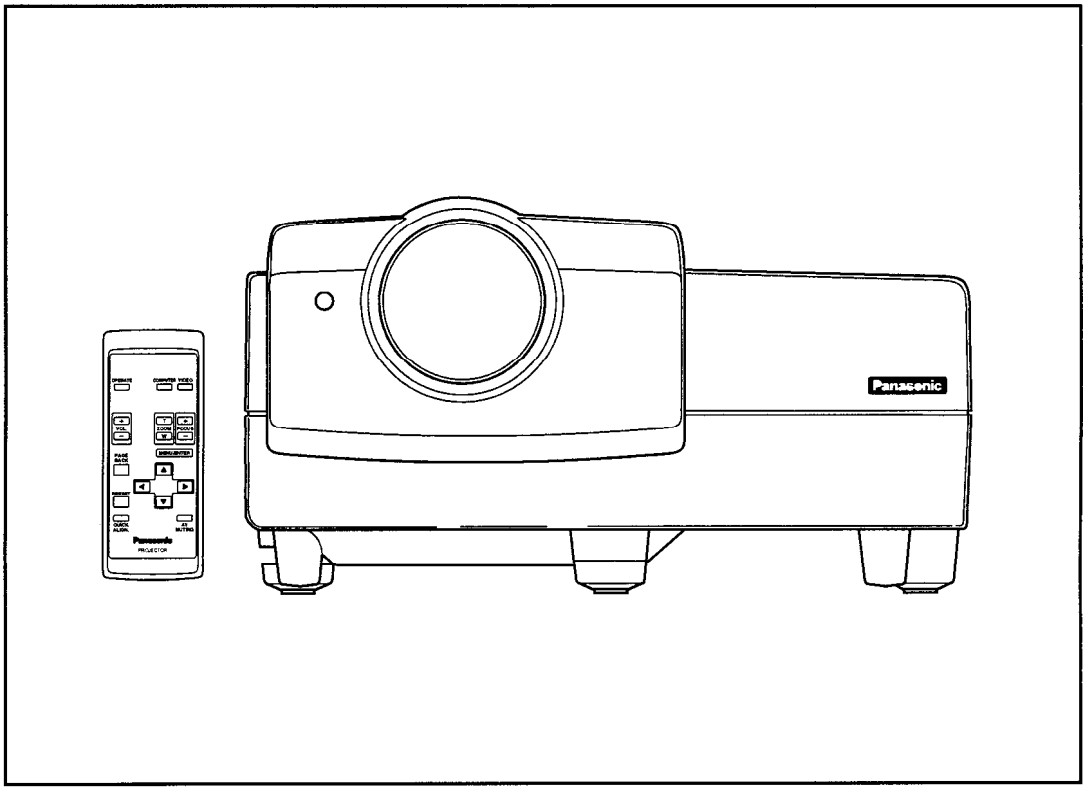

Operating Instructions 1-60

Panasonic®

Read these instructions completely before operating this unit.

TQBJ0026

Dear Panasonic Customer:

This instruction booklet provides all the necessary operating information that you might require. We hope it will help you to get the most performance out of your new product, and that you will be pleased with your Panasonic D-ILA projector.
The serial number of your product may be found on its back. You should note it in the space provided below and retain this booklet in case service is required.

Model number: **PT-D995U** _____ Serial number: _____

SAFETY PRECAUTIONS

IMPORTANT INFORMATION

WARNING :

TO PREVENT FIRE OR SHOCK HAZARDS, DO NOT EXPOSE THIS APPLIANCE TO RAIN OR MOISTURE.

CAUTION :

To reduce the risk of electric shock, do not remove cover. Refer servicing to qualified service personnel.

This projector is equipped with a 3-blade grounding-type plug to satisfy FCC rules. If you are unable to insert the plug into the outlet, contact your electrician.

FCC INFORMATION (U.S.A. only)

CAUTION: Changes or modification not approved by Panasonic could void the user's authority to operate the equipment.

NOTE: This equipment has been tested and found to comply with the limits for a Class A digital device, pursuant to Part 15 of the FCC Rules. These limits are designed to provide reasonable protection against harmful interference when the equipment is operated in a commercial environment. This equipment generates, uses, and can radiate radio frequency energy and, if not installed and used in accordance with the instruction manual, may cause harmful interference to radio communications. Operation of this equipment in a residential area is likely to cause harmful interference, in which case the user will be required to correct the interference at his own expense.

About burning-in of the D-ILA device

Do not allow the same still picture to be projected for a long time or an abnormally bright video picture to be projected. Do not project video images with high-intensity or high-contrast on a screen. The video image could be burned into the D-ILA device.

Use special care when projecting video games or computer program images. There is no problem with ordinary video-cassette playback images.

IMPORTANT SAFEGUARDS

Electrical energy can perform many useful functions. This unit has been engineered and manufactured to assure your personal safety. But **IMPROPER USE CAN RESULT IN POTENTIAL ELECTRICAL SHOCK OR FIRE HAZARD.** In order not to defeat the safeguards incorporated into this product, observe the following basic rules for its installation, use and service. Please read these "Important Safeguards" carefully before use.

– All the safety and operating instructions should be read before the product is operated.

– The safety and operating instructions should be retained for future reference.

– All warnings on the product and in the operating instructions should be adhered to.

– All operating instructions should be followed.

– Unplug this product from the wall outlet before cleaning. Do not use liquid cleaners or aerosol cleaners. Use a damp cloth for cleaning.

– Do not use attachments not recommended by the product manufacturer as they may be hazardous.

– Do not use this product near water. Do not use immediately after moving from a low temperature to high temperature, as this causes condensation, which may result in fire, electric shock, or other hazards.

– Do not place this product on an unstable cart, stand, or table. The product may fall, causing serious injury to a child or adult, and serious damage to the product. The product should be mounted according to the manufacturer's instructions, and should use a mount recommended by the manufacturer.

– When the product is used on a cart, care should be taken to avoid quick stops, excessive force, and uneven surfaces which may cause the product and cart to overturn, damaging equipment or causing possible injury to the operator.

– Slots and openings in the cabinet are provided for ventilation. These ensure reliable operation of the product and protect it from overheating. These openings must not be blocked or covered. (The openings should never be blocked by placing the product on bed, sofa, rug, or similar surface. It should not be placed in a built-in installation such as a bookcase or rack unless proper ventilation is provided and the manufacturer's instructions have been adhered to.)

For proper ventilation, separate the product from other equipment, which may prevent ventilation and keep distance more than 50 cm (19-3/4").

- This product should be operated only with the type of power source indicated on the label. If you are not sure of the type of power supply in your home, consult your product dealer or local power company.
- This product is equipped with a three-wire plug. This plug will fit only into a grounded power outlet. If you are unable to insert the plug into the outlet, contact your electrician to install the proper outlet. Do not defeat the safety purpose of the grounded plug.
- Power-supply cords should be routed so that they are not likely to be walked on or pinched by items placed upon or against them. Pay particular attention to cords at doors, plugs, receptacles, and the point where they exit from the product.
- For added protection of this product during a lightning storm, or when it is left unattended and unused for long periods of time, unplug it from the wall outlet and disconnect the cable system. This will prevent damage to the product due to lightning and power line surges.
- Do not overload wall outlets, extension cords, or convenience receptacles on other equipment as this can result in a risk of fire or electric shock.
- Never push objects of any kind into this product through openings as they may touch dangerous voltage points or short out parts that could result in a fire or electric shock. Never spill liquid of any kind on the product.
- Do not attempt to service this product yourself as opening or removing covers may expose you to dangerous voltages and other hazards. Refer all service to qualified service personnel.
- Unplug this product from the wall outlet and refer service to qualified service personnel under the following conditions:

  a) When the power supply cord or plug is damaged.

  b) If liquid has been spilled, or objects have fallen on the product.

  c) If the product has been exposed to rain or water.

  d) If the product does not operate normally by following the operating instructions. Adjust only those controls that are covered by the Operation Manual, as an improper adjustment of controls may result in damage and will often require extensive work by a qualified technician to restore the product to normal operation.

  e) If the product has been dropped or damaged in any way.

  f) When the product exhibits a distinct change in performance – this indicates a need for service.
- When replacement parts are required, be sure the service technician has used replacement parts specified by the manufacturer or with same characteristics as the original part. Unauthorized substitutions may result in fire, electric shock, or other hazards.
- Upon completion of any service or repairs to this product, ask the service technician to perform safety checks to determine that the product is in proper operating condition.
- The product should be placed more than one foot away from heat sources such as radiators, heat registers, stoves, and other products (including amplifiers) that produce heat.
- When connecting other products such as VCR's, and personal computers, you should turn off the power of this product for protection against electric shock.
- Do not place combustibles behind the cooling fan. For example, cloth, paper, matches, aerosol cans or gas lighters that present special hazards when over heated.
- Do not look into the projection lens while the illumination lamp is turned on. Exposure of your eyes to the strong light can result in impaired eyesight.
- Do not look into the inside of this unit through vents (ventilation holes), etc. Do not look at the illumination lamp directly by opening the cabinet while the illumination lamp is turned on. The illumination lamp also contains ultraviolet rays and the light is so powerful that your eyesight can be impaired.
- Xenon gas is enclosed with high pressure inside the light-source lamp (lamp unit) of this projector. If you drop or impart a shock to the lamp, or discard it as is, there is the possibility of explosion, leading to personal injury. Use special care when handling the lamp. For any unclear points, consult your product dealer.
- Use only the accessory cord designed for this product to prevent shock.

  The power supply rating of this product is 120 V AC, and the power cord normally supplied with it conforms to that power supply voltage.

  When used on a different power supply voltage, the power cable must be changed. Use only the power cord designated by our dealer to ensure Safety and EMC requirement.

  Consult your product dealer.

Power cord

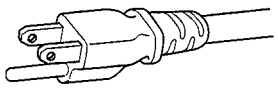

Power supply voltage: 120 V AC

***DO NOT allow any unqualified person to install the unit.**

Be sure to ask your dealer to install the unit (eg. attaching it to the ceiling) since special technical knowledge and skills are required for installation.
If installation is performed by an unqualified person, it may cause personal injury or electrical shock.

Contents

SAFETY PRECAUTIONS 3

Accessories 7

Controls and Features 8

Front Side /Top Surface / Right Side 8
Left-hand side 9
Bottom Surface 10
Control Panel 11
Connector Panel 13
Remote Control Unit 15
Installing Batteries 16

Installing the Projector 17

Precautions for installation 17
Projection Distance and Screen Size 18
Relationship between Projection Distances and Projection Screen Sizes 19
Effective Range and Distance of the Remote Control unit 20

Connecting to Various Devices 21

Signals that Can Be Input to the Projector 21
Connecting to Video Devices 22
Connecting to Hi-Vision Devices 22
Connecting to Other Devices 23
Connecting to Devices which Control the Projector 23
Connecting to Computer Devices 24
Connecting the Power Cord (Supplied) 26
When Turning On the Devices Connected to the Projector 27

Basic Operations 28

1. Turning on the Power 28
2. Selecting the video input to be projected 29
3. Adjusting the screen size 29
4. Adjusting focus 30
5. Adjusting sound volume 30
• For Operating Other Functions 31

Operating the Setting Menu 33

Making Basic Settings 33

Operating the Main Menu 34

Configuration of the Main Menu 34
Operating the Main Menu (Basic Operation of the Main Menu) 36
Changing the Color System 37
Changing the Language Display 38
Adjusting the Pixel Clock 39
Adjusting the Screen Position 40
Adjusting Picture Quality 41
Adjusting Sound Quality 44
Setting and Adjusting Other Functions (OPTIONS) 45
Changing (Setting) the Source 48

Replacing the Light-Source Lamp 50

Resetting the Lamp Use Time 52

Cleaning and Replacing the Filter 53

Troubleshooting 54

Specifications 56

Accessories

The following accessories are included with this projector. Check for them; if any item is missing, please contact your dealer.

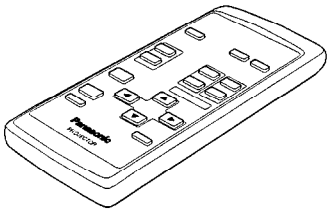

Remote control unit (TNQE168)

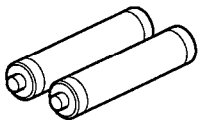

AAA/R03-size dry cell battery (x2)
(for checking operation)

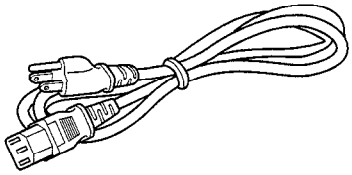

Power cord
[approx. 2.5 m (8.2 ft)]

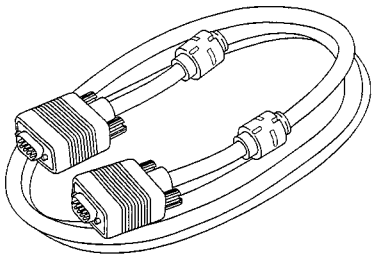

Personal computer connection cable
[approx. 2 m (6.56 ft)]
(D-sub, 3-row 15 pin)

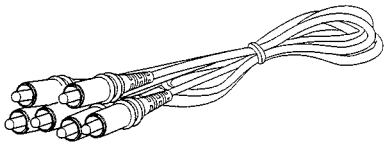

AV connection cable
[approx. 1.5 m (4.92 ft)]

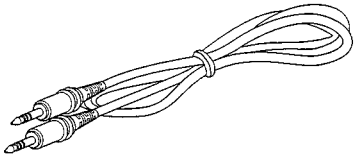

Audio cable
[approx. 3 m (9.84 ft)]
(3.5 mm dia. stereo mini plug)

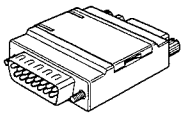

Conversion adapter for Mac
(for Macintosh)

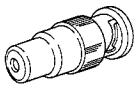

BNC-RCA conversion plug

Controls and Features

Front Side /Top Surface / Right Side

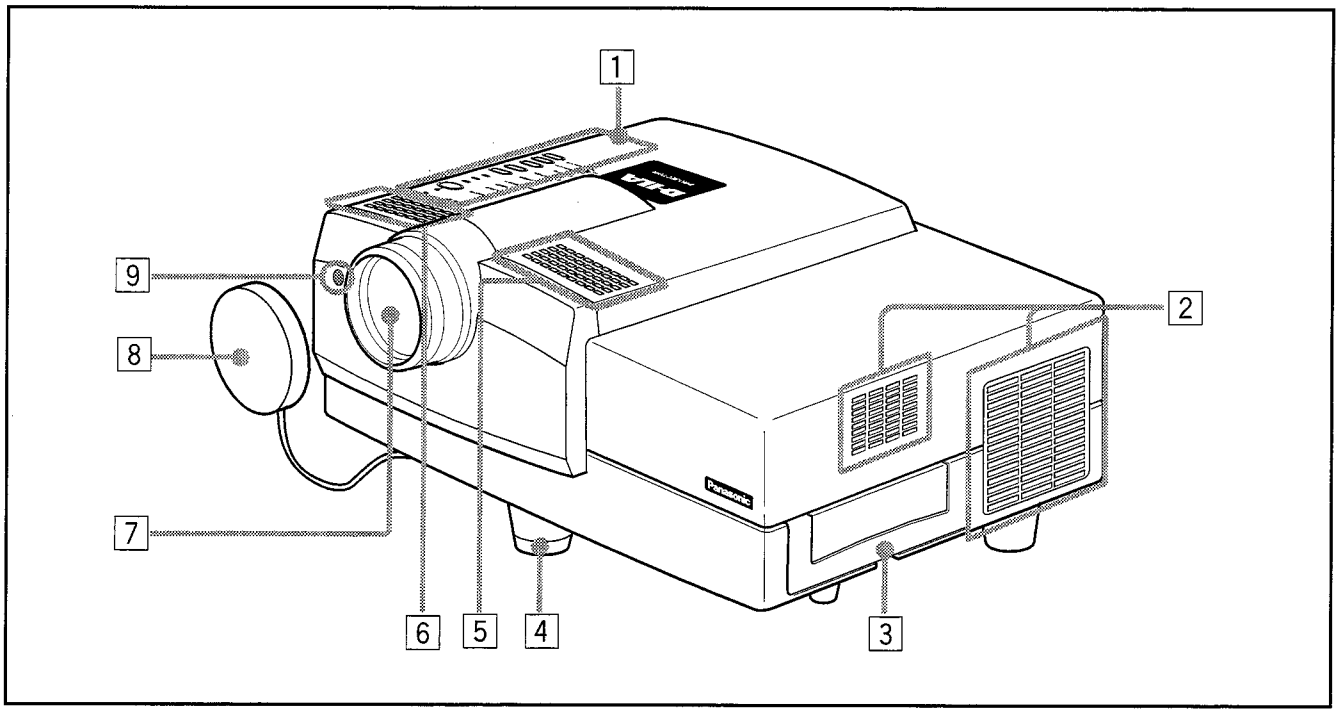

1 Control panel
For details, refer to “Control Panel” (page 11).

2 Exhaust vents
Vents for cooling fans through which warm air comes out.

CAUTION

- Do not block the exhaust vents, or heat builds up inside, possibly causing a fire. Also, do not touch the vents, or this could cause a low-temperature burn.

3 Carrying handle
Raise this handle when carrying the projector.

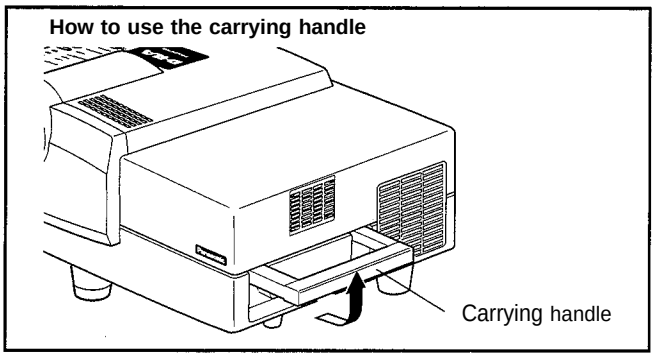

CAUTIONS

- When carrying the projector, do not shock it. Be careful to keep its balance.
- Do not carry it while the light source lamp is on or the cooling fan is operating. This could cause personal injury.

4 Adjustable foot (for adjusting upper/lower angles)
It is adjusted to be level when shipped from the factory. Turning to extend the foot allows adjustment up to + 7°.

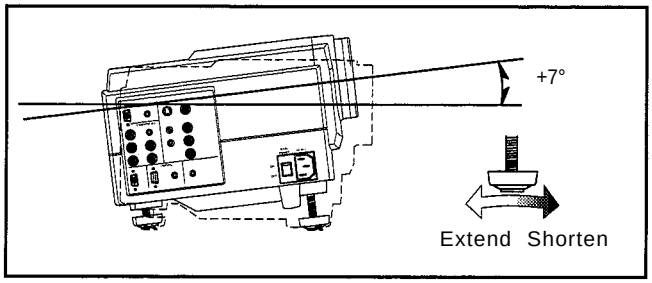

5 Built-in speaker (left)

6 Built-in speaker (right)

7 Lens
Projection lens, which is an electrically driven, approx. 1.5 x zoom lens. Before projection, remove the lens cap.

8 Lens cap
The cap has a string attached and the string is fixed to the projector when shipped from the factory. It is recommended that the cap be fitted on to prevent the lens becoming dirty when the projector is not used.

9 Remote sensor
When operating with the remote control, aim it toward this sensor. You can also operate the remote control by pointing it to a screen and allowing the remote sensor to receive the reflected light.

Left-hand side

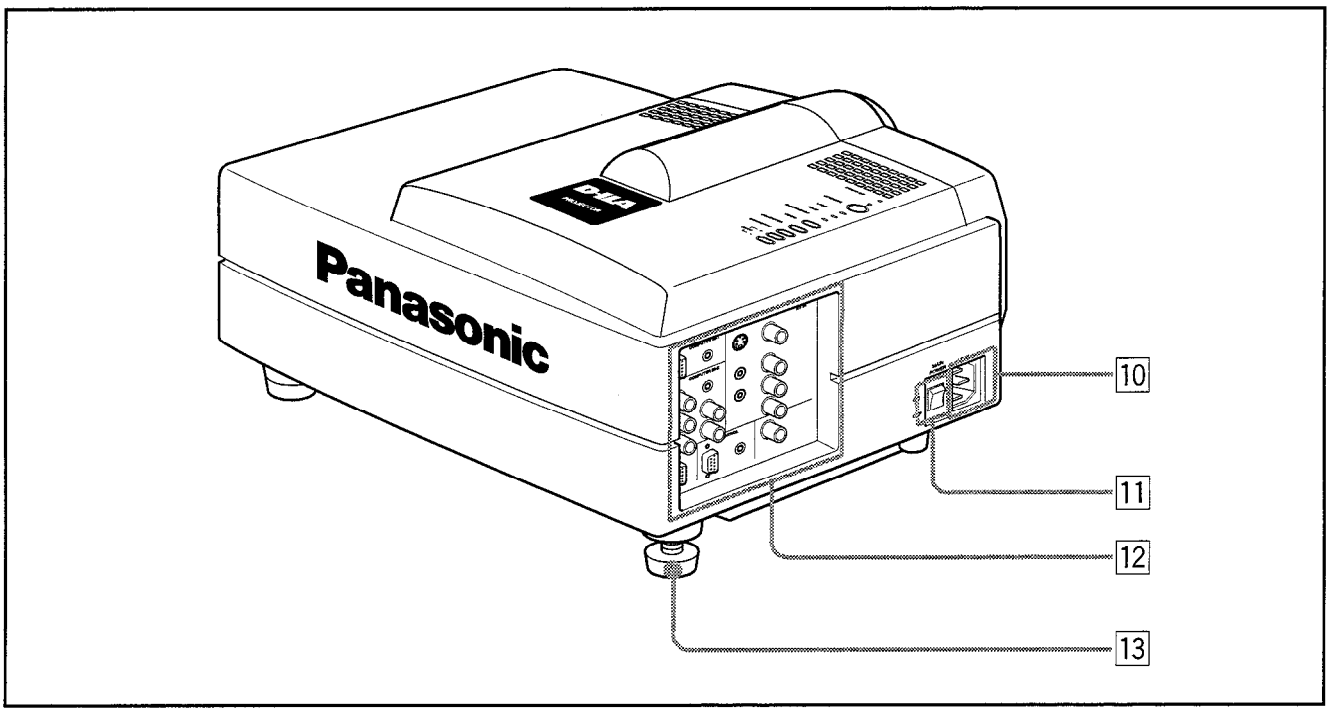

10 **AC IN (power input) terminal**
This is the power input terminal where the supplied power cord is connected. For details, refer to page 26.

11 **MAIN POWER switch**
This is the main power switch. When it is turned on, the projector goes into stand-by state, and the STAND BY indicator on the control panel comes on.
ON [I] : The main power turns on.
OFF [O] : The main power turns off.

12 **Connector panel**
For details, refer to “Connector Panel” on page 13.

13 **Adjustable foot (for horizontal angle adjustment)**
It is set at the shortest position when shipped from the factory Turn the foot to make the projector level. Adjustment can be made in the range of + 1.5° and – 1.5° from the horizontal position.

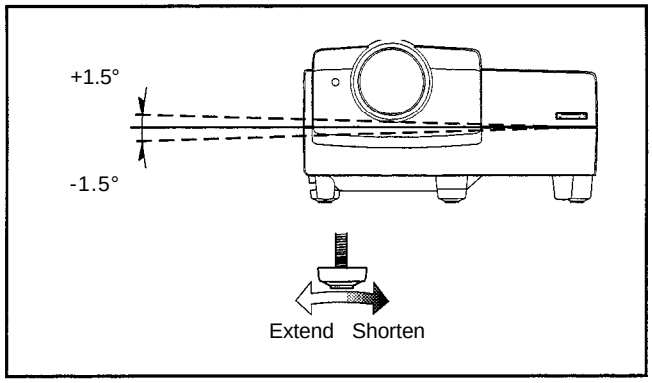

Bottom Surface

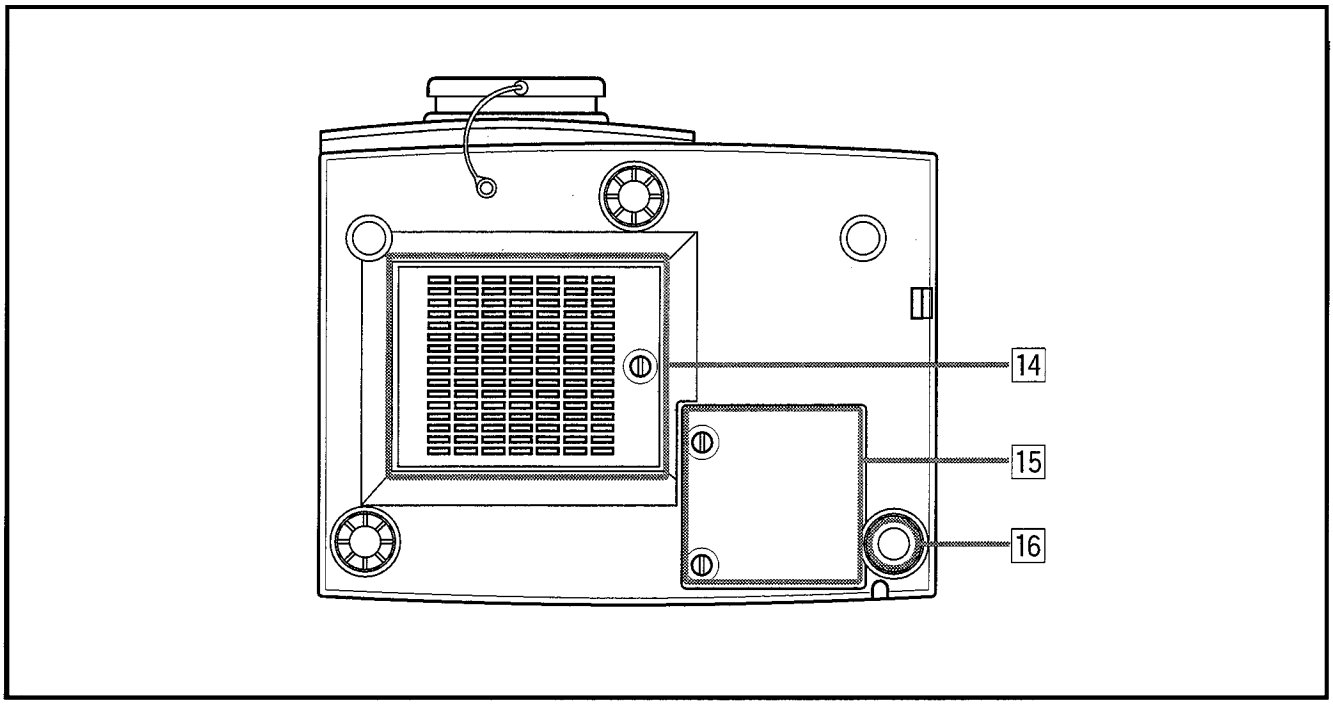

14 Air intake area (filter)

Air is taken in through this area to cool the light-source lamp. If this area is blocked or if something that obstructs taking in or exhausting air is placed around the projector, heat may build up inside and could cause a fire. For details, refer to “Precautions for Installation” on page 17.

CAUTIONS

- Be careful as paper, cloth or soft cushion could be drawn in if placed nearby Do not block the intake area, or heat may build up and could cause a fire.
- Clean the filter periodically. For details, refer to ‘Cleaning and Replacing the Filter” on page 53.
  Deposition of dirt on the filter works to reduce the cooling effect, causing heat to build up inside, which could cause a fire or malfunction.

15 Opening for replacing the light-source lamp

For replacing the light-source lamp, refer to “Replacing the Light-Source Lamp” on page 50.

16 Fixing foot

Control Panel

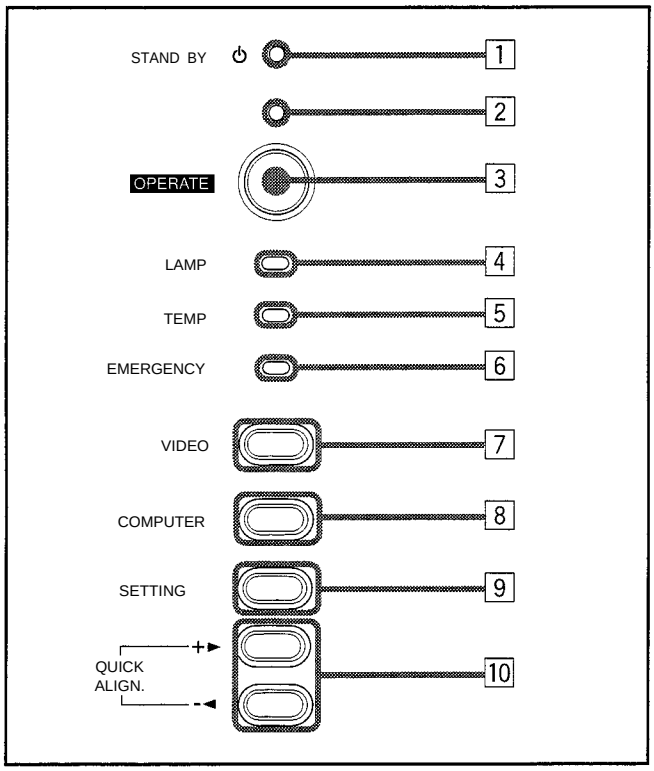

1 STAND BY Indicator

ON : When in stand-by mode.
Blinking : When in cool-down mode.

Memo

About the cool-down mode:
This projector has a function to cool down the heated lamp for a fixed period of time after projection is finished. This feature is referred to as the cool-down mode.

CAUTION

- The purpose of the cool-down mode is to prevent inner parts from being deformed or broken by heat from the heated lamp as well as to prolong the life of the lamp. Do not turn off the main power switch while in the cool-down mode. Also, do not place the projector on its side or stand it upright; this may block the exhaust vents.

2 OPERATE indicator

ON : When the projector is in operation (projecting)

3 OPERATE button

When the projector is in the stand-by mode, press this button, and the main power switch is turned on, causing the OPERATE indicator to light. Press it again, and the projector goes into the cool-down mode, then stand-by mode.

Memo

While in the cool-down mode:
If you press the OPERATE button, the projector is not tuned on.

4 LAMP indicator

ON : After the light-source lamp has been used for more than approx. 900 hours.
Blinking : Replace the lamp. Refer to "Replacing the Light-Source Lamp" on page 50.

5 TEMP indicator

ON : The temperature inside the projector is abnormally high.

Note

- While the TEMP indicator is on (during abnormal temperature), the power is automatically cut off, and an emergency mode is shown (with the EMERGENCY indicator blinking).

6 EMERGENCY indicator

Blinking : Something abnormal has occurred with the projector.

Memo

About the emergency mode:
The emergency mode is shown when the following anomalies have occurred with the projector (the EMERGENCY indicator blinks). In the emergency mode, projection is automatically interrupted and the cooling fans operate for about 20 seconds.

- **When the air filter is displaced.**
- **When the filter is clogged.**
- **When the light-source lamp has suddenly gone off.**
- **When the fans have stopped.**
- **When the temperature inside has risen abnormally high.**

CAUTION

- **When an emergency mode is shown:**

After the cooling fans have stopped, turn off the main power switch and unplug the power cord from the wall outlet.
Make sure the lamp-replacement cover and the air filter are correctly installed. Then, plug in the power cord again and operate the projector.
If it goes into an emergency mode again, after the cooling fans have stopped, turn off the main power switch, unplug the power cord, and call your dealer for repair.

Control Panel (Cont.)

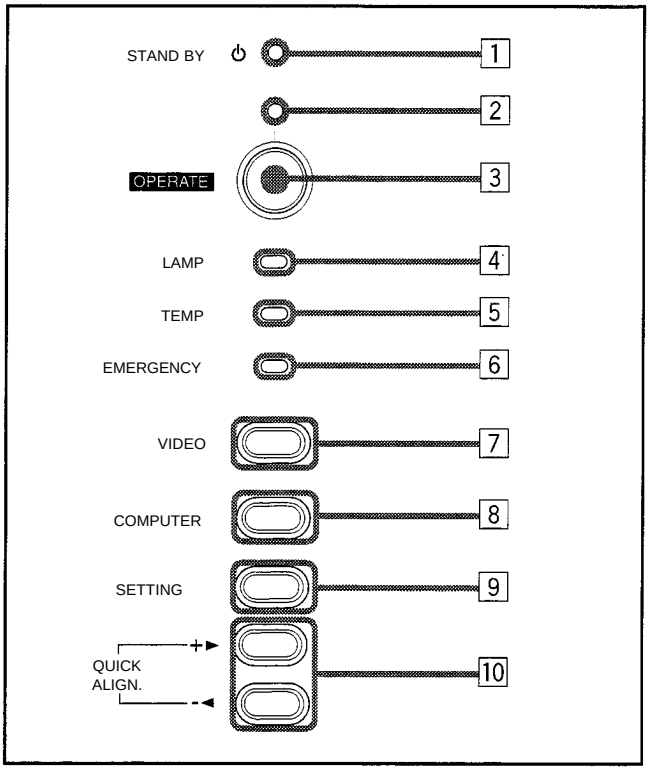

7 VIDEO button

Use this button to select a device such as a video deck connected to the AV IN terminal of the projector. Each time you press the button, the device selected changes as follows:

Y/C → VIDEO → Y,PB/B-Y,PR/R-Y

8 COMPUTER button

Use this button to select a device connected to the COMPUTER -1 or -2 terminals. Each time you press the button, the selection changes as follows:

COMPUTER 1 → COMPUTER 2

9 SETTING button

Use this button to call up the setting menu. For details, refer to “Making Basic Settings” on page 33.

10 QUICK ALIGN. button

While a menu screen is shown, use this button to adjust the values for the item selected. When no menu is shown, the quick alignment function works.

- **When a menu is shown**
  - **+ ► button:** The value for the selected item increases.
  - **- ◄ button:** The value for the selected item decreases.
- **When no menu is shown**

  Press the +► button and -◄ button at the same time: QUICK ALIGNMENT is displayed on the screen and the quick alignment function works (TRACKING, PHASE, H. POS. and V. POS. are automatically adjusted). When the adjustment is finished, the display goes off automatically.

Memo

The quick alignment function :

- Works for computer input (COMPUTER- 1 and - 2 input terminals) signals.
- Does not work for video input (AV IN input terminal) signals.

CAUTION

- Automatic adjustment with the quick alignment function should be done on a bright still-picture screen. This function may not work correctly on a dark screen or motion-picture screen. If adjustment with this function is not satisfactory, adjust TRACKING, PHASE, H. POS. and V. POS. manually (see pages 33, 39 and 40).

Connector Panel

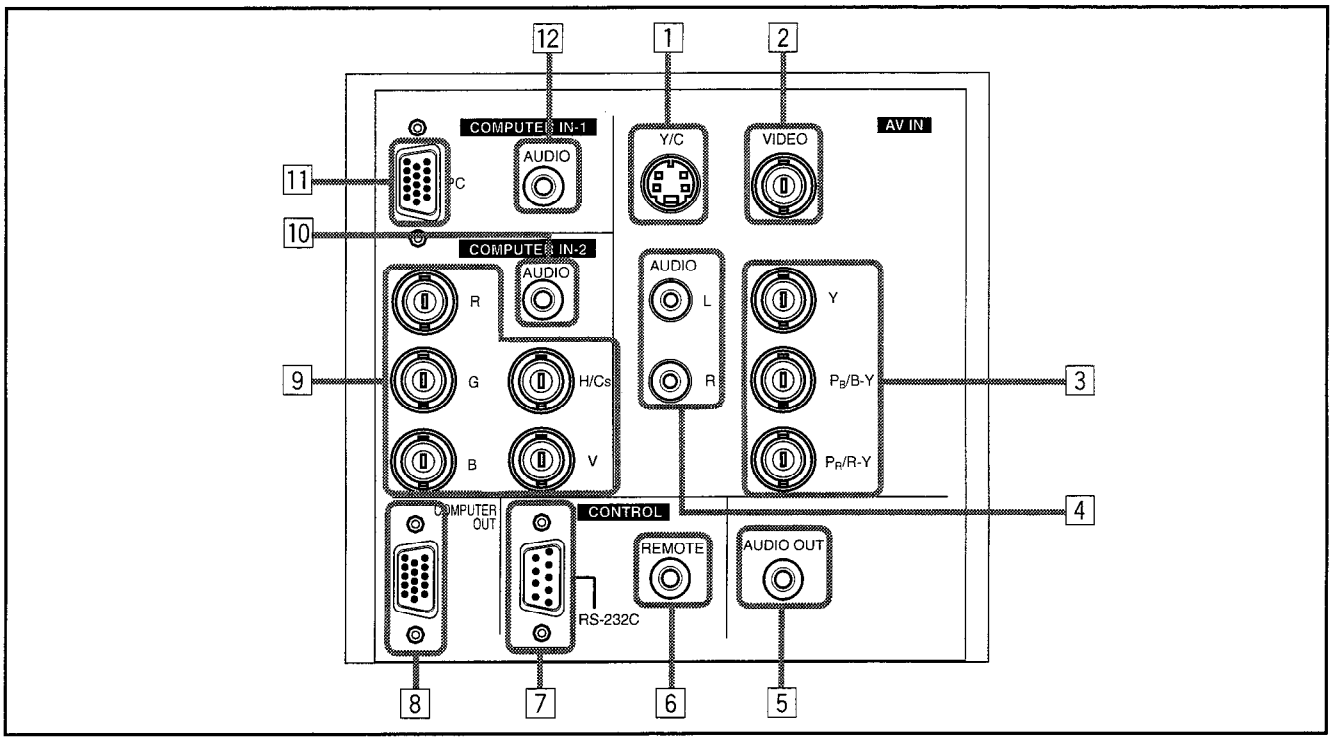

1 **Y/C (S video) input terminal (Mini DIN 4 pin)**
Connect this terminal to the S video output terminal of a video deck, etc.

2 **VIDEO (composite video) input terminal (BNC)**
Connect this terminal to the composite video output terminal of a video deck, etc.

3 **Y, PB/B-Y, PR/R-Y input terminals (BNC)**
These are input terminals for component (Y, B-Y, R-Y) signals and Hi-Vision base band (Y, PB, PR) signals. Devices with component signal output terminals for NTSC or Hi-Vision can be connected.

4 **AUDIO L/R (Audio • left/right) input terminals (pin jacks)**
Of devices connected to the video input terminals, such as a video deck, etc., the audio output terminals of the device to de projected is connected to these terminals. The input audio signal is reproduced by the speakers of the projector. The signal is also output from the AUDIO OUT terminal of the projector.
* When the input signal is stereo signal, connection should be made to both L and R.
* Signals from a monaural device should be connected to only L. That way, the projector's speakers and the AUDIO OUT terminal produce the same sound from both Land R.

5 **AUDIO OUT (audio output) terminal (stereo mini jack)**
Of input signals inputted to the projector, the audio signal of the device being projected is output. Volume should be adjusted using the VOL. (+/-) buttons on the remote control or VOLUME on the setting menu. When a cable is connected to this jack, no audio sound is produced from the projector's speakers.

6 **REMOTE terminal (mini jack)**
Connect an infrared remote control extension unit, etc. to this jack.
* For details, consult your dealer.

7 **RS-232C connector (D-sub 9 pin)**
This is a RS-232C interface-specified connector. This projector can be controlled by a computer connected externally.
* For details, consult your dealer.

8 **COMPUTER OUT (computer output) connector (D-sub 3-row 15 pin)**
The computer input signal projected on the screen is output. A display unit can be used by connecting it to this connector.

Memo

To select the proper audio input for video input:
The video input terminals (AV IN input terminals) can be switched with the projector's or remote control's VIDEO button. However, since this projector has only a single audio input terminal, reconnect audio input in accordance with the AV device to be used.

Connector Panel (Cont.)

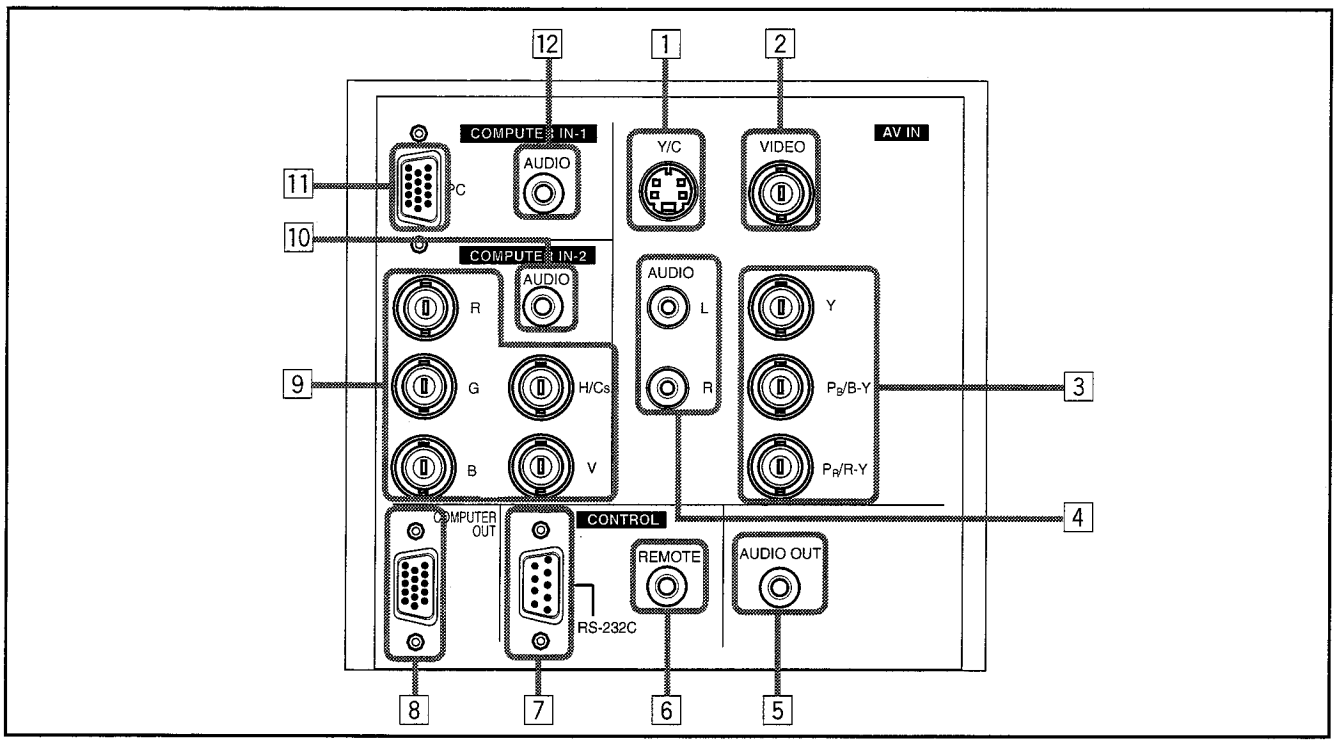

9 COMPUTER IN (computer input) -2 terminals (BNC)

These are input terminals for analog RGB signals, vertical sync (V) signals, and horizontal sync (H) signals/composite signals(Cs). Devices which have analog RGB signal output terminals can be connected.

***Input of external sync signals is automatically detected.**

Detection of H/D signals or Cs signals causes automatic switch to external sync. The priority order is H/D > Cs.

CAUTION

- When computer-related signals are input, the uppermost edge of the screen may appear bowing if the sync signal input is composite sync (Cs) or G on sync signal. In that case, use separate sync signals for vertical sync (V) and horizontal sync (H).

10 AUDIO input terminal (stereo mini jack)

This is an audio input terminal for COMPUTER IN (computer input) -2 terminal. Connect the audio output signal of a device connected to COMPUTER IN (computer input) -2 terminal.

* When input to COMPUTER -2 is selected, the audio signal input is reproduced by the projector's speakers. Also, signals can be output from the AUDIO OUT (audio output) terminal.

(However, if a cable is connected to AUDIO OUT (audio output) terminal, audio sound does not come out from the projector's speakers.)

11 COMPUTER IN (computer input) -1 connector (D-sub 3- row 15 pin)

This is an input connector (PC) dedicated for computer signals (RGB video signals and sync signals).

Connect the display output connector of the computer to this connector. When a Macintosh computer is to be connected, use the Conversion adapter for Mac supplied.

CAUTION

- When computer-related signals are input, the uppermost edge of the screen may appear bowing if the sync signal input is composite sync (Cs) or G on sync signal. In that case, use separate sync signals for vertical sync (V) and horizontal sync (H).

12 AUDIO (audio) input terminal (stereo mini jack)

This is an audio input terminal for COMPUTER IN (computer input) -1 terminal. Connect the audio output signal of a device connected to COMPUTER IN (computer input) -1 terminal.

* When input to COMPUTER -1 is selected, the audio signal input is reproduced by the projector's speakers. Also, signals can be output from the AUDIO OUT (audio output) terminal.

(However, if a cable is connected to AUDIO OUT (audio output) terminal, audio sound does not come out from the projector's speakers.)

Remote Control Unit

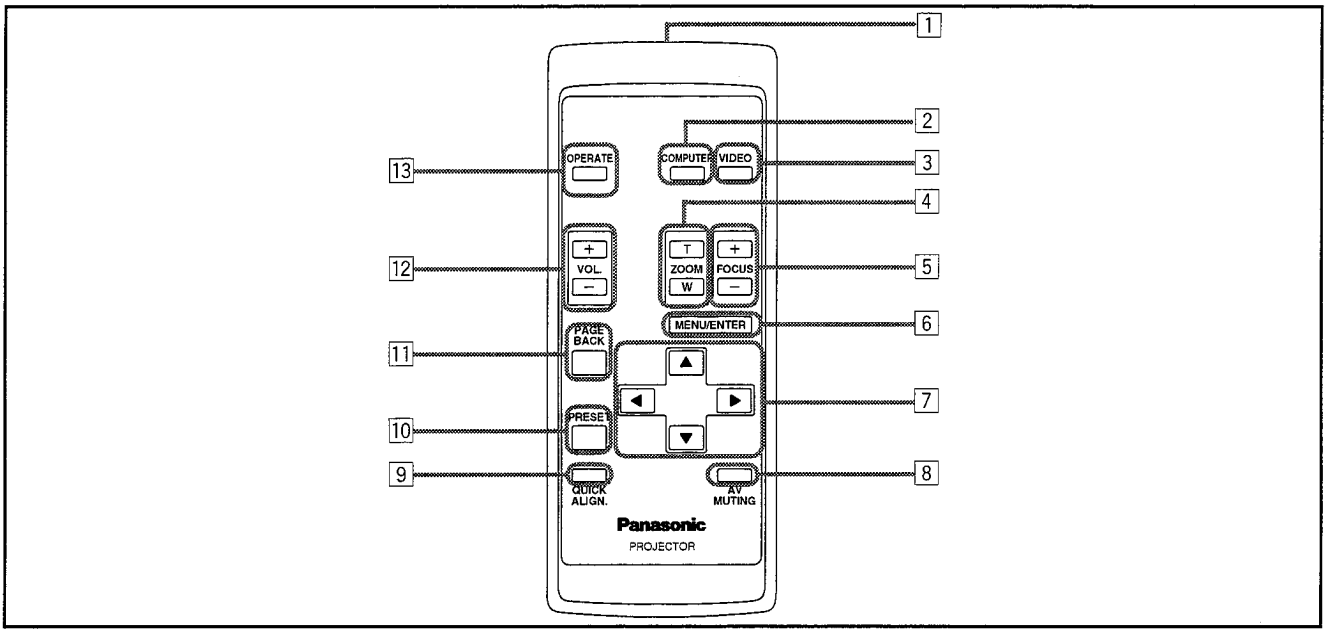

1 **Remote control's signal transmitter**

2 **COMPUTER button**

Use this button to select the devices connected to the projector's COMPUTER IN (computer input) -1 and -2 input connector/terminals. Each time you press the button, the selection changes as follows:

COMPUTER 1 → COMPUTER 2

3 **VIDEO button**

Use this button to select the devices such as a video connected to the projector's AV IN (AV input) terminals. Each time you press the button, the selection changes as follows:

Y/C → VIDEO → Y,PB/B-Y,PR/R-Y

4 **ZOOM (T/W) button**

Use these buttons to increase or decrease the screen size. (The projector's projection lens is an electrically driven zoom lens of about 1.5 x.)

T : The screen size decreases.

W: The screen size increases.

5 **FOCUS (+/-) button**

Use these buttons to adjust the focus of the projected video.

+: The focus point becomes more distant.

-: The focus point becomes nearer.

6 **MENU/ENTER button**

Use this button to display the main menu. While the main menu is displayed, pressing this button displays a details setting (submenu) for items with details settings.

7 **Cursor (▲/▼/◄/►) button**

While the main menu is displayed, use these buttons to select an item to adjust or make adjustment.

8 **AV MUTING (On/Off) button**

Use this button to turn off the video image and audio sound temporarily. Pressing it again makes the video image and audio sound to resume.

9 **QUICK ALIGN. (Quick Alignment) button**

Use this button to automatically adjust TRACKING, PHASE, H. POS. and V. POS. of the projected video. During the automatic adjustment, QUICK ALIGNMENT appears on the screen, and disappears after it is finished.

Memo

Quick alignment function:

Does not work for video input (AV IN terminals) signals.

Works only for computer-related (COMPUTER-1 and-2 input connector/terminals) signals.

CAUTION

- Automatic adjustment with the quick alignment function should be done on a bright still-picture screen. This function may not work correctly on a dark screen or motion-picture screen. If adjustment with this function is not satisfactory, adjust TRACKING, PHASE, H. POS. and V. POS. manually (see pages 33, 39 and 40).

10 **PRESET button**

While making adjustment on the main or setting menu, use this button to reset the setting of the selected item to the factory-set value. This button works only for numerical settings and does not work for switching ON to OFF.

11 **PAGE BACK button**

While a details setting is displayed, use this button to go back to the previous page.

12 **VOL. (Volume) (+/-) button**

Use these buttons to adjust the sound volume:

+: Increases the volume level.

-: Decreases the volume level.

13 **OPERATE button**

To turn on the power, press this button for one second or more.

* About 30 seconds after the power has been turned on, a video image will appear on the screen.

Installing Batteries

Install batteries in the remote control. If the remote control has started to work erratically, replace the batteries.

1 Open the back cover.

While pushing on the back cover, slide it in the direction of the arrow.

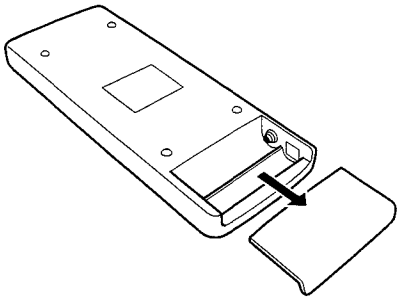

2 Install the batteries.

Place the two batteries (AAA/R03-size) supplied in the remote control as illustrated below.

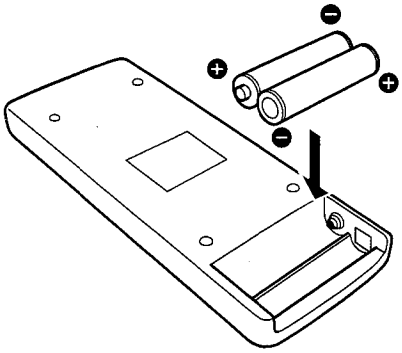

3 Close the back cover.

Slide the back cover in the direction of the arrow until a click is heard.

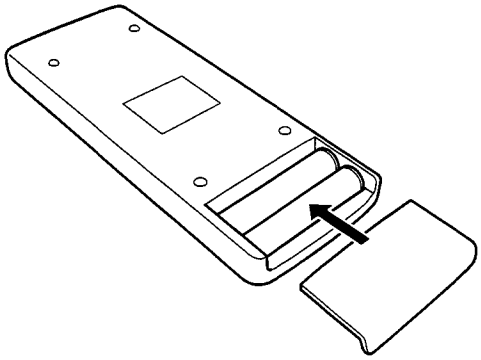

Precautions for using batteries

If batteries are used incorrectly, they may crack or leak liquid. This could cause a fire, burn, malfunction, or staining or damaging the surrounding.

Beware of the following:

- Do not mix new and old batteries.
- Do not mix different types of batteries as they differ in characteristics.
- Place batteries so they match the polarities indicated: (+) to (+) and (-) to (-).
- Be sure to put the minus (-) end in first to avoid short-circuiting.
- Use only designated batteries.
- Remove the batteries if not used for a prolonged period of time.
- When the batteries are exhausted, replace them immediately. Otherwise, liquid could leak, or malfunction could occur due to leaked liquids. If the leaked liquid contacts the skin, wipe it off with a cloth, otherwise the skin could become irritated.
- Do not put batteries into fire or try to recharge them.
- Batteries run for six months to one year in normal use. But the batteries supplied are for confirming operation and may not run that long. When the remote control starts failing to work properly, replace the batteries with new ones.

Installing the Projector

Precautions for Installation

CAUTION

Do not install the projector in places where :

- There is much water, humidity or dust.
- The projector may be subjected to oil smoke or cigarette smoke.
- The surface is soft, such as a carpet or cushion.
- The projector may be subjected to direct sunlight.
- Temperature is high or humidity is low.

  Allowable operation temperature range: + 5°C to + 35°C (41°F to 95°F)
  Allowable relative humidity range: 20% to 80% (no condensation)
  Allowable storage temperature range: -10°C to +60°C (14°F to 140°F)

■ When installing the projector, observe the followings:

- **Do not use the projector placed on its side.**
  Avoid using the projector placed on its side. This could cause a malfunction.
- **Use the projector within the installed angle.**
  Avoid using the projector inclined ±30° or more right-to-left or left-to-right. This could cause color variation or harm the lamp life.
- **Do not block the exhaust vents.**
  Do not use a cover which encloses the projector air-tight or blocks the exhaust vents. Allow sufficient space around the projector. When the projector is enclosed in a space of the following dimensions, use an air conditioner so the temperature inside becomes equal to the outside temperature.

Allowable minimum space required

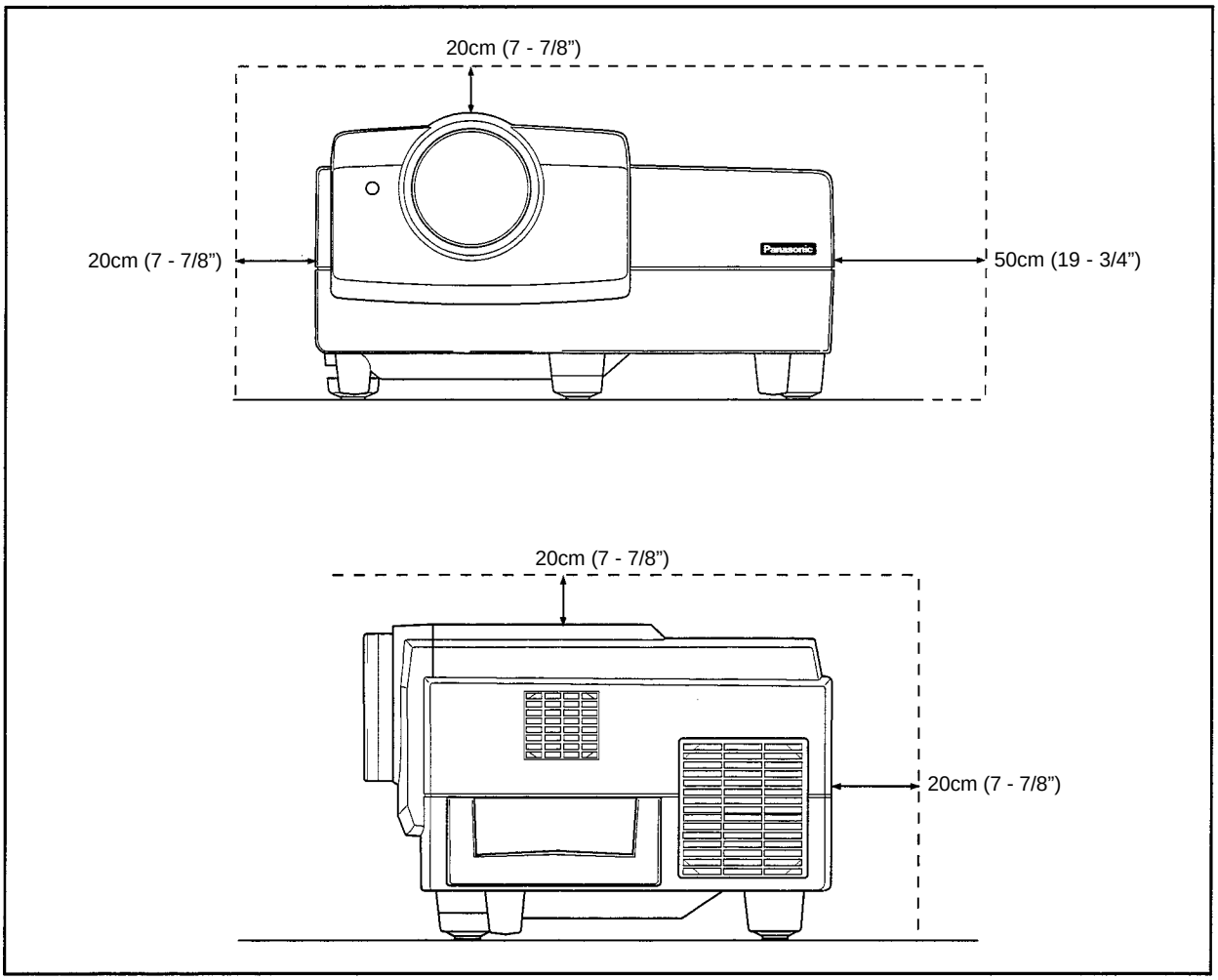

Projection Distance and Screen Size

- **The projector's projection lens is a zoom lens of about 1.5 x. The screen size at the maximum enlargement is 1.5 times that of the minimum size.**
- **The projection distance that can be focused is 2.5 to 20 m. Install the projector within this range.**

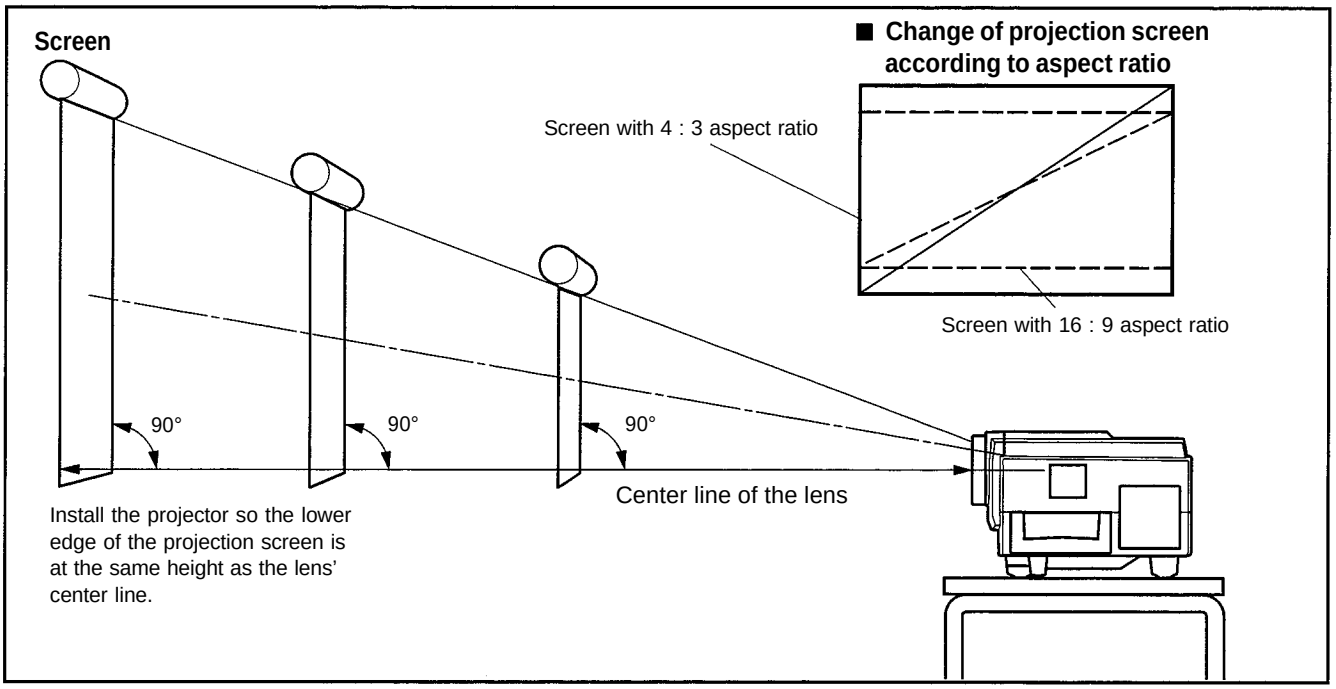

Projection distance	Projection screen size (diagonal length)			
	When screen aspect ratio is 4 : 3		When screen aspect ratio is 16 : 9	
	Minimum projection screen	Maximum projection screen	Minimum projection screen	Maximum projection screen
8.2 ft (2.5 m)	42" (approx. 107 cm)	63" (approx. 160 cm)	39" (approx. 100 cm)	57" (approx. 144 cm)
16.4 ft (5 m)	86" (approx. 219 cm)	128" (approx. 325 cm)	79" (approx. 201 cm)	117" (approx. 297 cm)
32.8 ft (10 m)	172" (approx. 437 cm)	259" (approx. 657 cm)	158" (approx. 402 cm)	237" (approx. 601 cm)
65.6 ft (20 m)	345" (approx. 877 cm)	521" (approx. 1,323 cm)	317" (approx. 806 cm)	478" (approx. 1,214 cm)

*Also, refer to the table of "Relationship Between Projection Distances and Projection Screen Sizes" on page 19 as a reference.

CAUTIONS and NOTES

- Install the screen so the lower edge of the projected picture aligns with the extended center line of the projector's lens. That way, the lower edge of the picture projected on a 4 : 3 aspect ratio screen aligns with the extended center line of the lens. Also, the screen must be at right angles with the extended center line of the lens (so that projection occurs at right angles with the screen).
- When installing the screen, use a 4 : 3 aspect ratio picture.
  (A 16 : 9 aspect ratio picture is projected based on the width of the range in which a 4 : 3 aspect ratio picture is projected.)
- The diagonal length of a 16 : 9 aspect ratio picture is about 91.8% that of a 4 : 3 aspect ratio picture. This value is a guide and should be used as a reference.
- When projecting at the maximum projection distance (20 m/65.6 ft), we recommend that the projector be used with the zoom on the Tele (T).
- If sunlight or lamp light strikes the projection screen directly, the picture becomes whitish and dim. Be sure to use a curtain, etc. to shield the light.
- Trapezoidal distortion may not be corrected.
  Adjust the projector within the range of angle adjustment (up/down adjustment angle: +7°; horizontal adjustment angle: ±1.5°) so that it is set up level.
- The numeric values listed in the table of Relationship between Projection Distances and Screen Sizes on page 19 are provided only as a guide or reference. The projection sizes may vary within manufacturing tolerances of the projection lens.
- When hanging the projector from the ceiling, use a dedicated hanging fixture.

Relationship between Projection Distances and Projection Screen Sizes

■ For 4 : 3 aspect ratio screens

Projection distance	Projection screen size (diagonal length)	
	Minimum projection screen size (Tele end)	Maximum projection screen size (Wide end)
8.2 ft (2.5 m)	42” (approx. 107 cm)	63” (approx. 160 cm)
9.84 ft (3.0 m)	51” (approx. 130 cm)	76” (approx. 193 cm)
13.12 ft (4.0 m)	68” (approx. 173 cm)	102” (approx. 259 cm)
16.4 ft (5.0 m)	86” (approx. 219 cm)	128” (approx. 325 cm)
19.68 ft (6.0 m)	103” (approx. 262 cm)	154” (approx. 391 cm)
22.96 ft (7.0 m)	120” (approx. 305 cm)	180” (approx. 457 cm)
26.24 ft (8.0 m)	138” (approx. 351 cm)	207” (approx. 525 cm)
29.52 ft (9.0 m)	155” (approx. 394 cm)	233” (approx. 591 cm)
32.8 ft (10.0 m)	172” (approx. 437 cm)	259” (approx. 657 cm)
36.08 ft (11 .O m)	190” (approx. 483 cm)	285” (approx. 723 cm)
39.36 ft (12.0 m)	207” (approx. 526 cm)	310” (approx. 787 cm)
42.64 ft (13.0 m)	224” (approx. 569 cm)	338” (approx. 858 cm)
45.92 ft (14.0 m)	242” (approx. 615 cm)	364” (approx. 924 cm)
49.2 ft (15.0 m)	260” (approx. 661 cm)	390” (approx. 990 cm)
52.48 ft (16.0 m)	276” (approx. 702 cm)	416” (approx. 1,056 cm)
55.76 ft (17.0 m)	294” (approx. 747 cm)	443” (approx. 1 ,125 cm)
59.04 ft (18.0 m)	311” (approx. 790 cm)	469” (approx. 1 ,191 cm)
62.32 ft (19.0 m)	328” (approx. 834 cm)	495” (approx. 1,257 cm)
65.6 ft (20.0 m)	345” (approx. 877 cm)	521” (approx. 1,323 cm)

■ For 16 : 9 aspect ratio screens

Projection distance	Projection screen size (diagonal length)	
	Minimum projection screen size (Tele end)	Maximum projection screen size (Wide end)
8.2 ft (2.5 m)	39” (approx. 100 cm)	57” (approx. 144 cm)
9.84 ft (3.0 m)	47” (approx. 120 cm)	69” (approx. 175 cm)
13.12 ft (4.0 m)	63” (approx. 161 cm)	93” (approx. 236 cm)
16.4 ft (5.0 m)	79” (approx. 201 cm)	117” (approx. 297 cm)
19.68 ft (6.0 m)	95” (approx. 242 cm)	140” (approx. 355 cm)
22.96 ft (7.0 m)	110” (approx. 280 cm)	165” (approx. 419 cm)
26.24 ft (8.0 m)	126” (approx. 321 cm)	189” (approx. 480 cm)
29.52 ft (9.0 m)	142” (approx. 361 cm)	213” (approx. 541 cm)
32.8 ft (10.0 m)	158” (approx. 402 cm)	237” (approx. 601 cm)
36.08 ft (11.0 m)	174” (approx. 442 cm)	260” (approx. 660 cm)
39.36 ft (12.0 m)	190” (approx. 483 cm)	286” (approx. 726 cm)
42.64 ft (13.0 m)	206” (approx. 524 cm)	310” (approx. 787 cm)
45.92 ft (14.0 m)	222” (approx. 564 cm)	334” (approx. 848 cm)
49.2 ft (15.0 m)	238” (approx. 605 cm)	358” (approx. 909 cm)
52.48 ft (16.0 m)	254” (approx. 646 cm)	382” (approx. 970 cm)
55.76 ft (17.0 m)	270” (approx. 686 cm)	406” (approx. 1,031 cm)
59.04 ft (18.0 m)	285” (approx. 724 cm)	430” (approx. 1,092 cm)
62.32 ft (19.0 m)	301” (approx. 765 cm)	454” (approx. 1,153 cm)
65.6 ft (20.0 m)	317” (approx. 806 cm)	478” (approx. 1,214 cm)

Effective Range and Distance of the Remote Control Unit

The operable distance of the remote control unit is about 10 m (32.8 ft) for direct reception. The remote control can be used by having it reflected on the screen, etc. When you use the remote control by reflecting it at the screen, the total distance of A + B should be about 10 m (32.8 ft) or less. The operable angles of the remote control unit is 50° right to left, and 15° up and down.

The effective range and distance of the remote control unit

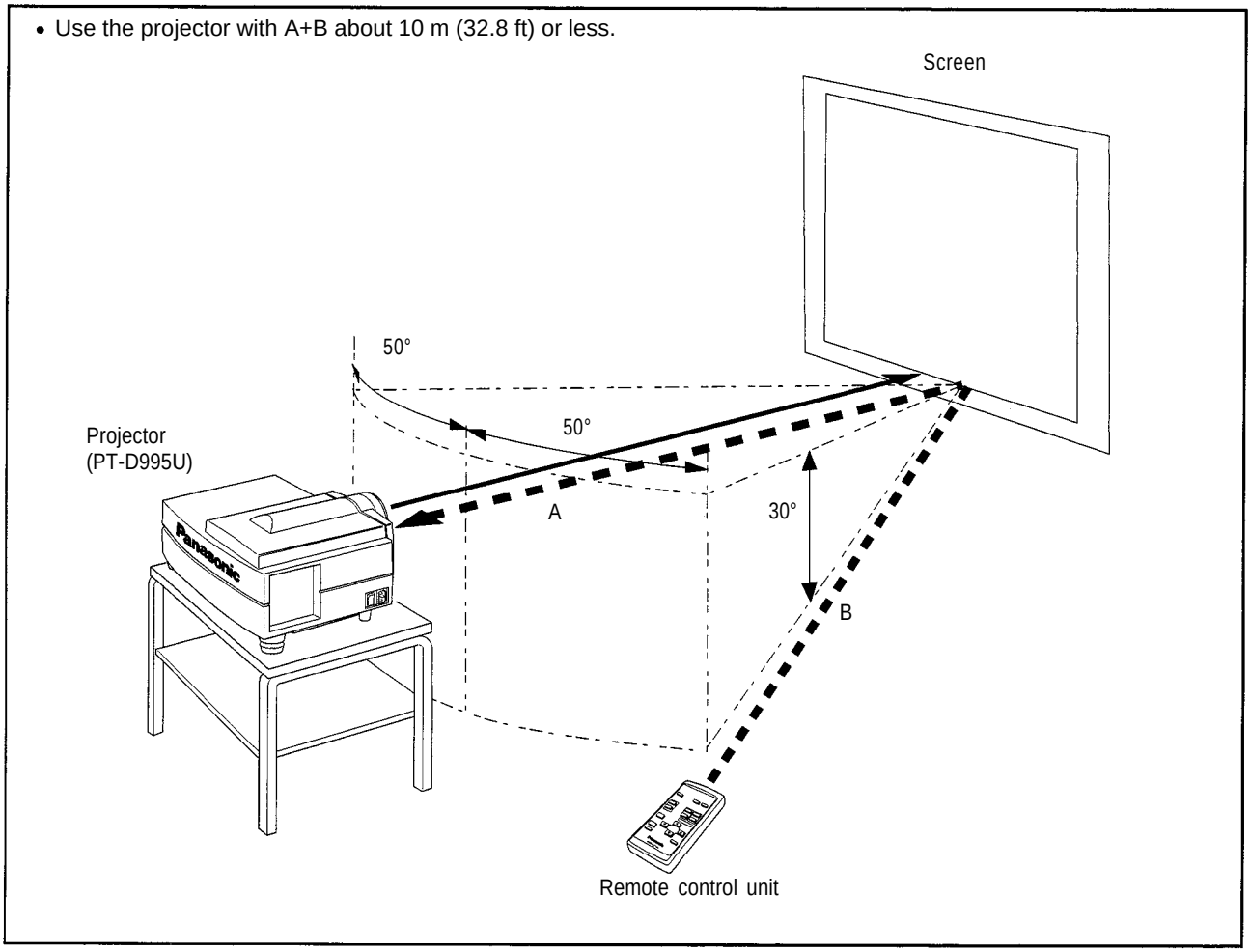

Note

- Depending on the type of the screen used, the effective distance of the remote control may be reduced.

Connecting to Various Devices

*** Before connection, be sure to turn off the projector and connected devices.**
*** Read the manual which comes with each device thoroughly.**

Signals that Can Be Input to the Projector

The following signals can be input to the projector:

■ Video signals

(1) Response to color systems

Color system / Input terminal	N T S C	NTSC4.43	PAL	SECAM
VIDEO	○	○	○	○
Y/C	○	○*1	○	- - - - -
Y, PB/B-Y, PR/R-Y	○*2	○*2	○*2	○*2
G, B, R, H/CS, V	○*2	○*2	○*2	○*2

*1 : Responds if Y/C output is available.
*2 : Signifies that component signals ("Y, PB, PR"/"Y, B-Y, R-Y"/"G, B, R, H/CS, V") conform to the signal timing (synchronization and video period) of each color system. The color systems are used for convenience only.

(2) Response to double density (*1), high-vision signals

*1 : Signals whose density of scanning lines/field is twice as high.

Input terminal	NTSC*2	PAL*3	High-vision signal
Y, PB/B-Y, PR/R-Y	○	○	○
G, B, R, H/CS, V	○	○	○

*2 : Responds to signals whose horizontal scanning frequency is 31.5 kHz. NTSC can be made twice as dense by a line doubler. Also, possible to respond to fully-specified, decoded wide-clear-vision signals and 525P progressive signals.
*3 : Responds to signals whose horizontal scanning frequency is 33.5 kHz. PAL can be made twice as dense by a line doubler.

■ Computer signals

- Signals with the following resolutions can be input to the input connector/terminals of COMPUTER IN-1 (PC) or COMPUTER IN-2 (G, B, R, H/CS, V). (The following signals are preset.)

Screen resolution (standard name)	Horizontal frequency	Vertical frequency	Scanning method
640 x 400 (PC-9801)	24.8kHz	56.4Hz	Non-interlace
640 x 350 (VGA1)	31.5kHz	70.1Hz	Non-interlace
640 x 480 (VGA3)	31.5kHz	59.9Hz	Non-interlace
640 x 480 (Macintosh 13")	35.0kHz	66.7Hz	Non-interlace
640 x 480 (VGA VESA)	37.5kHz	75.0Hz	Non-interlace
800 x 600 (SVGA1)	37.9kHz	60.3Hz	Non-interlace
800 x 600 (SVGA2)	48.1kHz	72.2Hz	Non-interlace
832 x 624 (Macintosh 16")	49.7kHz	74.6Hz	Non-interlace
1024 x 768 (XGA1)	48.4kHz	60.0Hz	Non-interlace
1024 x 768 (XGA2)	56.5kHz	70.1Hz	Non-interlace
1024 x 768 (Macintosh 19")	60.2kHz	74.9Hz	Non-interlace
1152 x 870 (Macintosh 21")	68.7kHz	75.0Hz	Non-interlace
1280 x 1024 (SXGA1)	64.0kHz	60.0Hz	Non-interlace5
1280 x 1024 (SXGA2)	70.8kHz	67.0Hz	Non-interlace
1360 x 1024 (SXGA3: Mac Board)	80.0kHz	75.1Hz	Non-interlace

Notes

- Interlace signals are not handled.
- Some signals other than listed above can be displayed. But they require adjustment. Even some of the signals listed above may require adjustment depending on the video board used.
- When a signal other than listed above is input, the screen could be partially erased or an unneeded fold-over screen could appear.
- Even signals in the frequency range that can be input may not be displayed normally depending on the type of the signal.
- Composite sync.(CS) and G on sync. signals can not handled depending on the devices connected.

Connecting to Video Devices

Before connection, be sure to turn off both the projector and video device.

- Read the manual which comes with each video device thoroughly.
- Use the supplied AV connection cable. An AV connection cable with an S video terminal is not supplied.

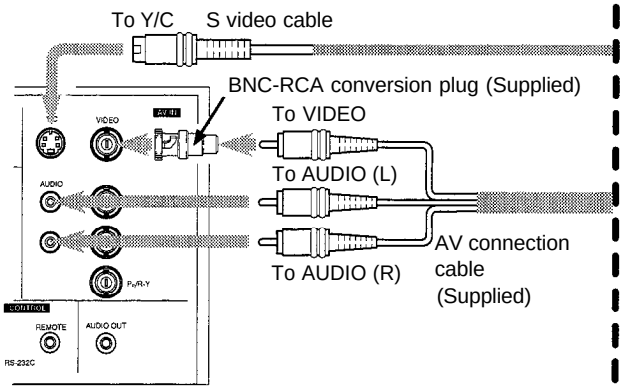

Video devices

- VCR (Video Cassette recorder)

- Laser video disc player

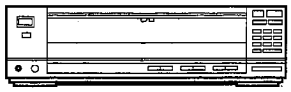

- Camcorder

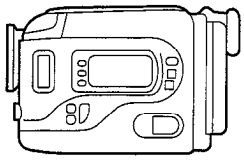

To select the proper audio input for video input

The video input terminals (AV IN terminal) can be switched with the VIDEO button. However, since this projector has only a single audio input terminal, reconnect audio input in accordance with the AV device to be used.

Memo

- Use of an extension cable to connect a video device and the projector could cause video degradation.
- When a signal with much jitter is reproduced on a VCR or special-effect playback is performed, the upper part of the picture or the picture itself may be erased or distorted.

Connecting to Hi-Vision Devices

Before connection, be sure to turn off both the projector and Hi-Vision devices.

- Read the manual which comes with each Hi-Vision device thoroughly.
- Use separately available BNC cables and audio cables to connect Hi-Vision devices.

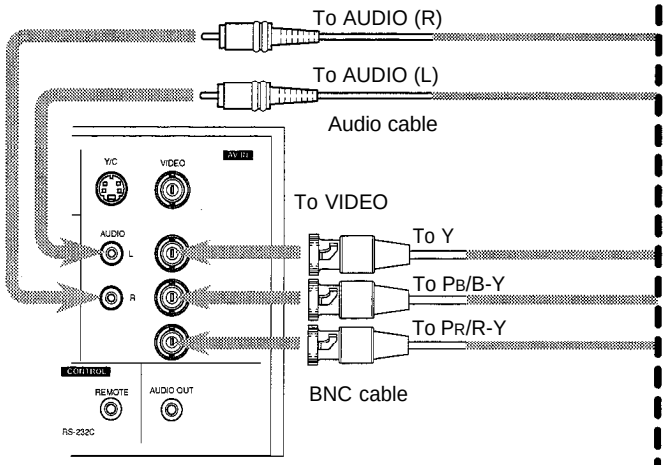

Hi-Vision devices

- W-VHS VCR

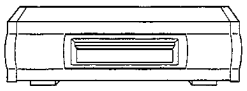

- Text/video camera

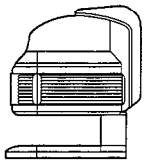

- Hi-Vision video camera

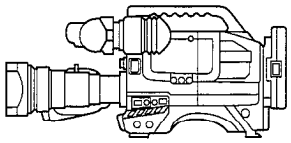

To select the proper audio input for video input

The video input terminals (AV IN terminal) can be switched with the VIDEO button. However, since this projector has only a single audio input terminal, reconnect audio input in accordance with the AV device to be used.

Memo

Other devices with component signal output terminals (DVD player (NTSC), etc.) can be connected.
*DVD: Digital Video Disc

Connecting to Other Devices

Before connection, be sure to turn off both the projector and other devices to be connected.

- Thoroughly read the manual which comes with the device to be connected.
- Speakers with a built-in amplifier and game devices can be connected. Use the AV connection cable and audio cable supplied, or the cable supplied with a game device.

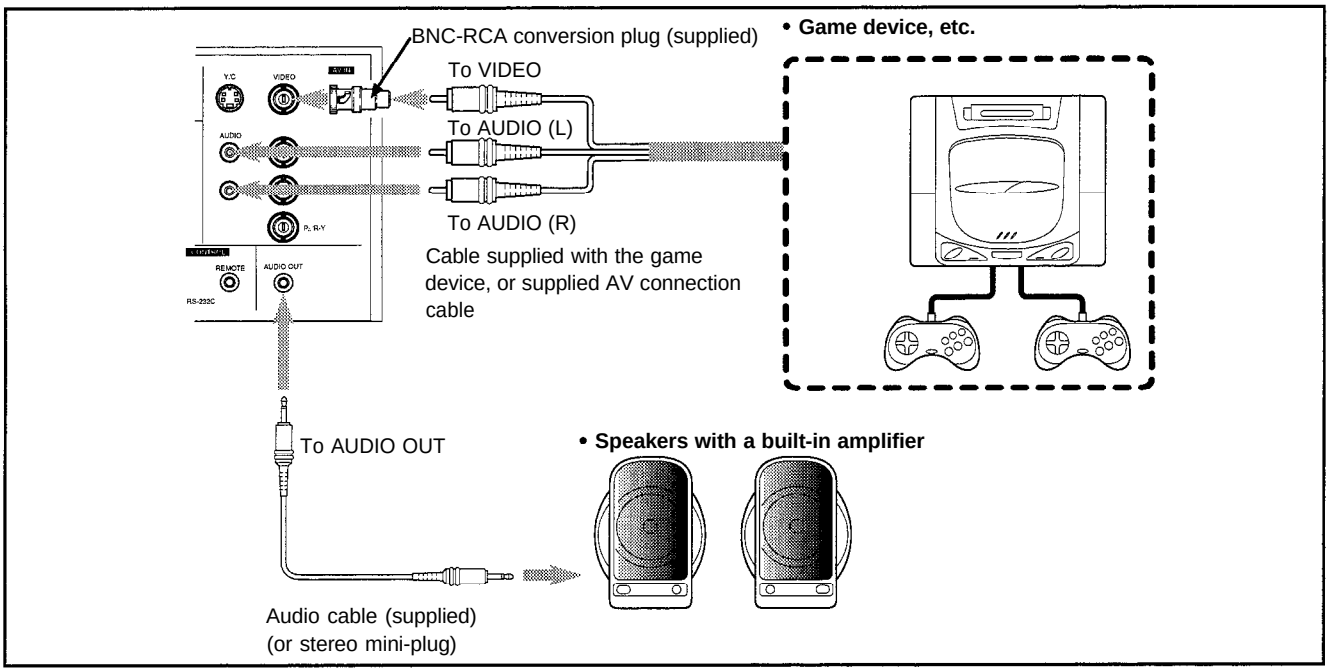

Connecting to Devices which Control the Projector

Before connection, be sure to turn off both the projector and devices to be connected.

- Read the manual thoroughly which comes with each device to be connected.
- By connecting a computer to the RS-232C connector, you can control the projector. Also, you can make an infrared remote sensor extension unit and connect it to the REMOTE terminal of the projector.
  * Obtain connection cables as required.
  * For details, consult your Panasonic-authorized dealer or service center.

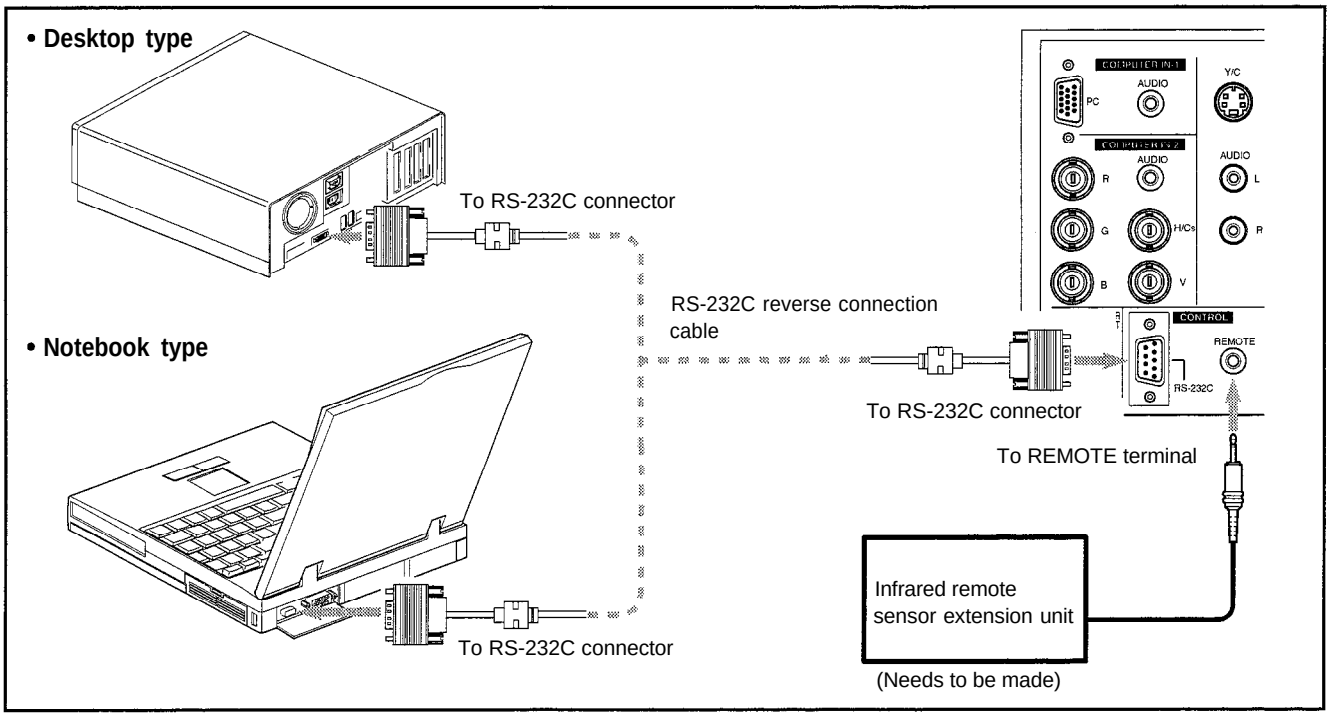

Connecting to Computer Devices

Before connection, be sure to turn off both the projector and computer devices.

- Read the manual which comes with each device thoroughly.

■ Connection to an IBM PC or IBM-compatible computer

- Use the supplied computer connection cable. Also, prepare cables required for connecting the devices connected.

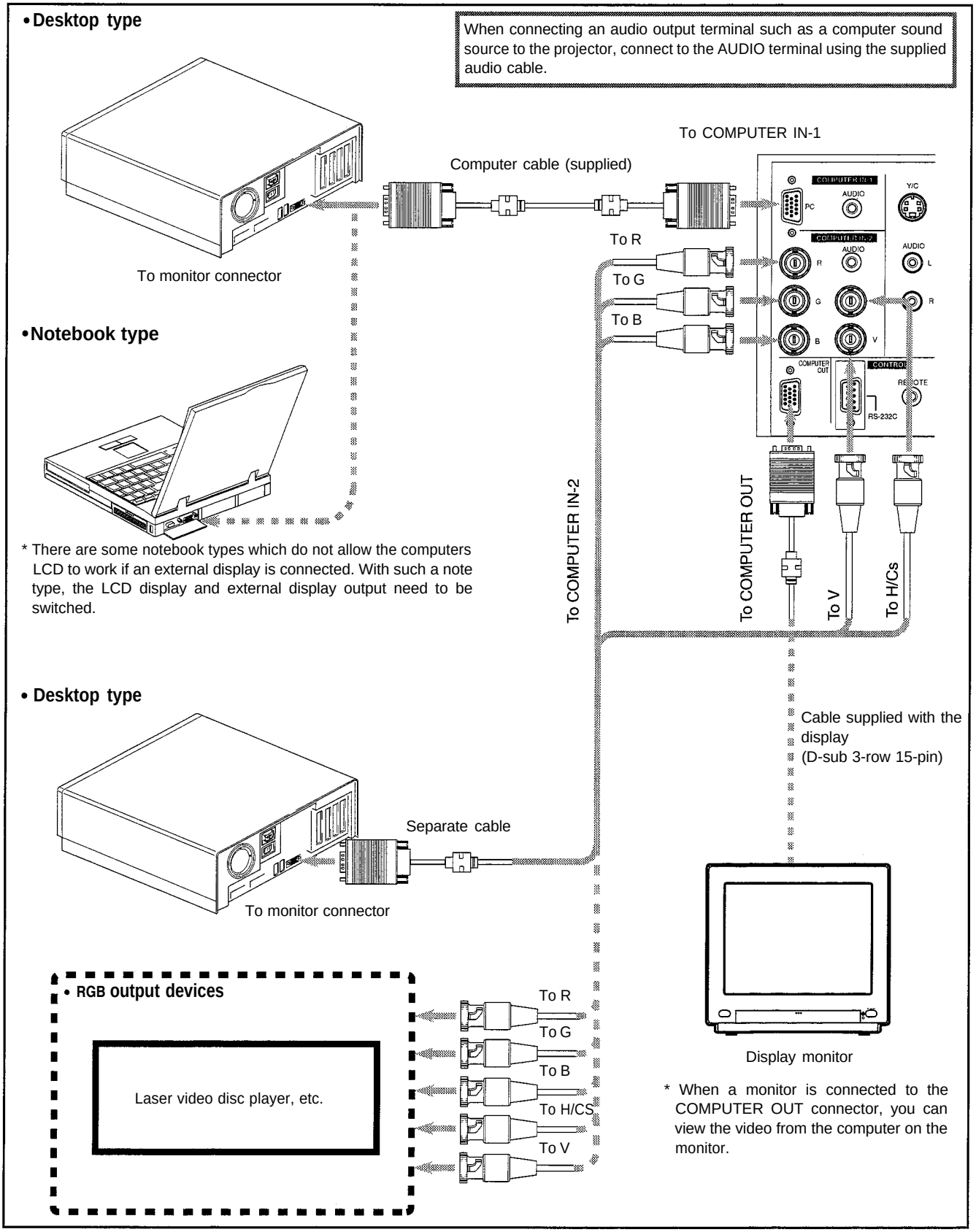

Connecting to Computer Devices (Cont.)

Before connection, be sure to turn off both the projector and computer devices.

- Read the manual which comes with each device thoroughly.

■ Connection to Macintosh

- Use the supplied Personal computer connection cable and the supplied conversion adapter for Mac.

- When connecting an audio output terminal such as a computer sound source to the projector, connect to the AUDIO terminal using the supplied audio cable.
- Other connections are the same as in the connection example for IBM PC or IBM compatible PCs.

• Desktop type

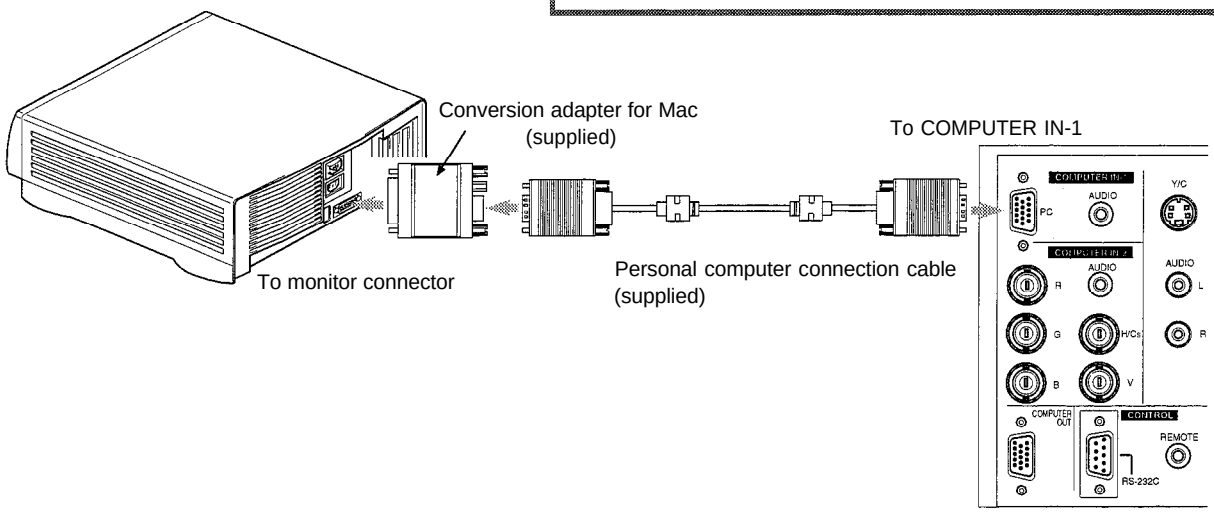

Connecting the Power Cord (Supplied)

After all devices have finished being connected, connect the projector's power cord. At this time, do not turn on the MAIN POWER switch yet.

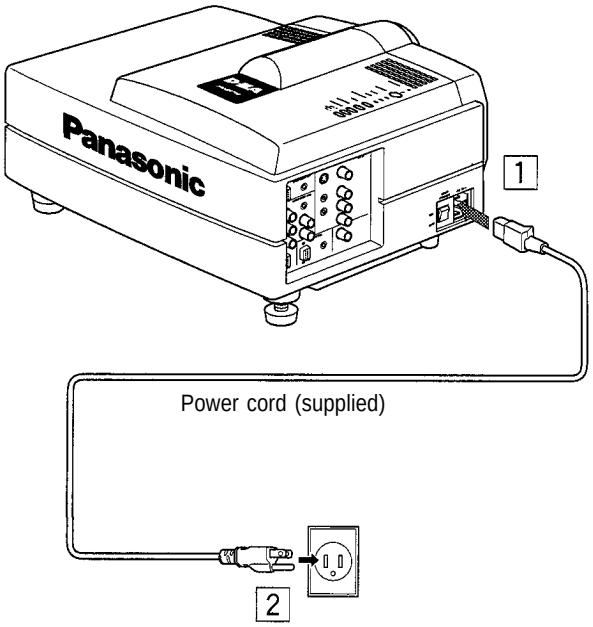

1 Insert the supplied power cord into the power input terminal (AC IN ~) of the projector.

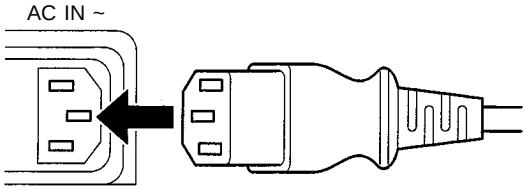

2 Insert the plug of the supplied power cord into a wall outlet.

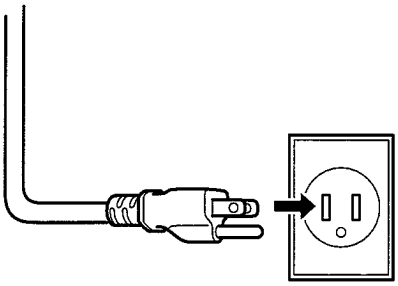

CAUTIONS

To prevent fire and electric shock, observe the following:

- When you do not use devices, pull out their power cords from wall outlets.
- Do not connect the devices with power cords other than supplied.
- Do not use voltage other than the power voltage indicated.
- Do not scar, damage, or walk on the power cords. Also, do not put a heavy object on, heat or pull the power cords, otherwise they may be damaged.
- Do not insert or pull out the plugs with a wet hand.

CAUTION

- Since the power requirement of the projector is high, be sure to insert the power plug directly into a wall outlet.

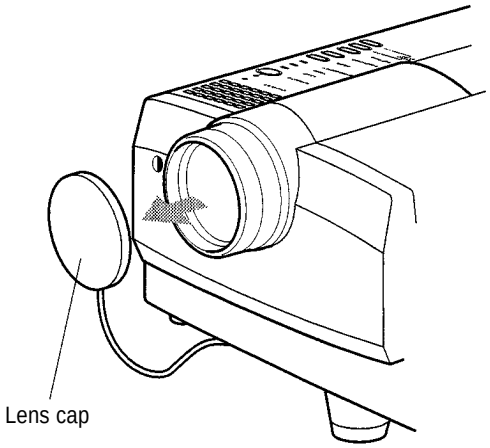

■ To use the projector

- **Remove the lens cap.**

  * The lens cap has a string attached and it is fixed to the projector.

  Be sure to place the cap on the lens when the projector will not be used for some time.

When Turning On the Devices Connected to the Projector

Turn on the switches of the projector and the devices connected in the following order.
Skip over unconnected devices if there is any.

Power switch of the monitor of the computer which provides input to the projector

↓

Peripheral devices of the computer which provides input to the projector
(Hard disk, magneto optical disk, scanner, etc.)

↓

Power switch of AV devices which provide input to the projector

↓

Projector itself

↓

Power switches of devices to which the projector provides output
(AV devices and display monitor)

↓

Power switch of the computer which provides input to the projector

*When turning off the power switches, do so in the reverse order.

Memo

When the OPERATE button is pressed but the power is not supplied:
If the filter or lamp replacement opening cover is displaced, the power is not supplied. Check them for correct installation.

CAUTIONS and NOTES

Do not turn off the MAIN POWER switch suddenly while the projector is being used or immediately after it has been used. This could cause a malfunction.

- Since the projector uses a high-intensity lamp and is heated to high temperature, cooling fans are designed to operate during projection. And after use, the cooling fans continue to run from when the OPERATE button is pressed until the light-source lamp is cooled down. During cooling, the STAND BY indicator blinks to alert the cooling fans are running. During this time, do not turn off the main power switch. After the cooling of the light-source lamp is finished (the fans stop) and the STAND BY indicator comes on, then turn off the main power switch.
- If you press the OPERATE button immediately after the light-source lamp lights, it takes about 40 seconds for the lamp to go off. To turn the lamp on again, wait 10 seconds or more before pressing the OPERATE button.

When the TEMP indicator lights, the power turns off automatically.

- While the light-source lamp is on, if an abnormal temperature rise is detected, the TEMP indicator comes on, the power is automatically cut off, and the projector's EMERGENCY indicator blinks (goes into an emergency mode).

When the EMERGENCY indicator blinks, turn off the main power switch after the fans have stopped running.

- If the following abnormality occur to the projector, it goes into an emergency mode (the EMERGENCY indicator blinks). When the projector goes into an emergency mode, it stops projecting automatically and runs the fans for about 20 seconds.
  - When the filter is dislodged.
  - When the filter is clogged.
  - When the light-source lamp suddenly goes off.
  - When the fans stop running.
  - When the temperature inside rises abnormally high.
- When the projector goes into an emergency mode:
  After the fans have stopped, turn off the MAIN POWER switch and pull out the power cord. After that, re-insert the power cord and try to operate the projector. If it goes into emergency again, after the fans have stopped, turn off the main power switch, pull out the power cord, and consult your Panasonic-authorized dealer or service center for repair.

Basic Operations

■ Projector's buttons

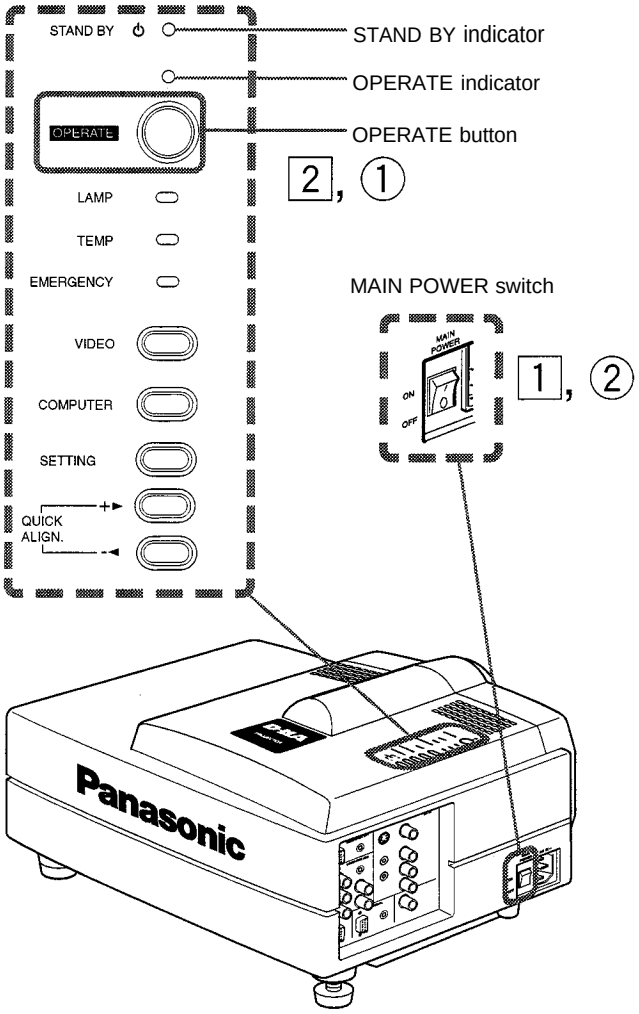

■ Remote control unit

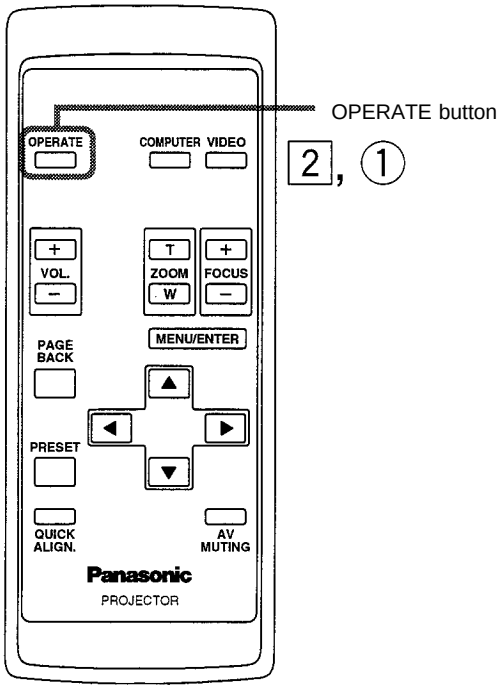

The following describes the basic procedure for normal use of the projector.

1. Turning on the Power

1 Turn on the MAIN POWER switch.

ON [I]: The main power turns on and the STAND BY indicator comes on.

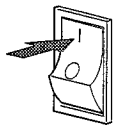

Projector's indicator

2 Press the OPERATE button. (Or press the remote control's OPERATE button for one second or more.)

- The OPERATE indicator comes on.
- About 30 seconds after the MAIN POWER switch is turned on, you can start projecting.

Remote control unit

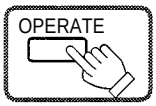

or

Projector

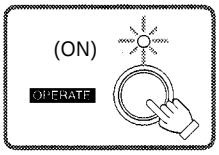

Note

- After the power is turned on, the screen may be jumbled for a few seconds. but this is not a malfunction.

■ Turning off the Power

① Press the OPERATE button. (Or press the remote control's OPERATE button for one second or more.)

- The STAND BY indicator changes to blinking, and the projector goes into cool-down mode.

Example of the projector's button

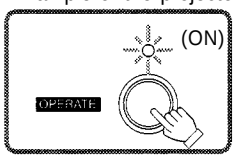

➡

Projector

② Turn off the MAIN POWER switch after the STAND BY indicator changes to steady on.

OFF [O]: The MAIN POWER switch turns off and the STAND BY indicator goes off.

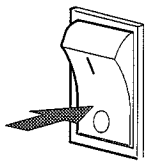

Projector

* Do not turn off the MAIN POWER switch during cool down mode (the STAND BY indicator blinking). Turn it off after the STAND BY indicator becomes on (stand-by mode).

■ Projector's buttons

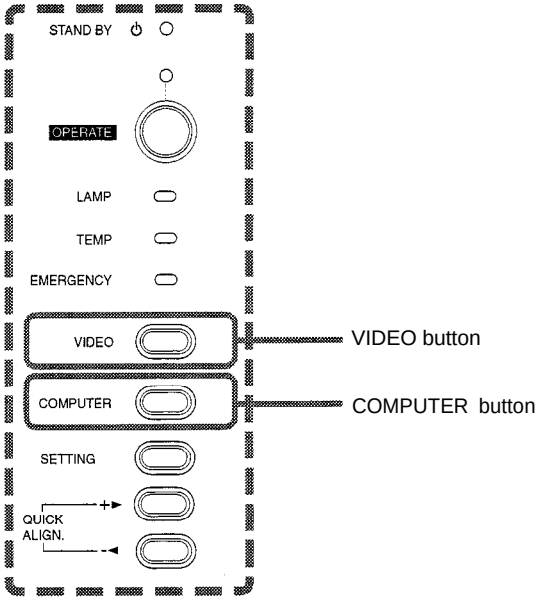

■ Remote control unit

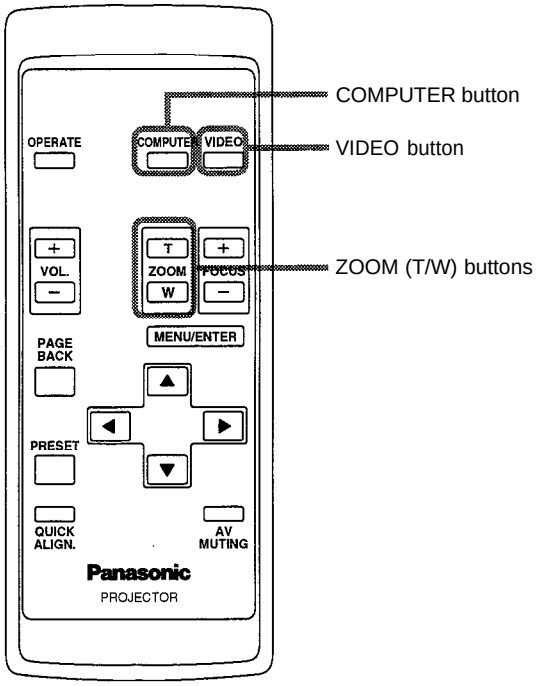

ATTENTION

- **DO NOT give any shock to this projector while operating it;** otherwise, the light-source lamp goes off (the EMERGENCY indicator lights up).

  If the shock turns off the light-source lamp —
  Turn off the power by pressing the MAIN POWER switch, then turn it on again. Now you can operate the projector as usual.

2. Selecting the video input to be projected

■ Press the VIDEO button or the COMPUTER button to switch the input.

- Each time you press either button, the selected input changes as follows.

■ When you press VIDEO:

Y/C → VIDEO → Y,PB/B-Y,PR/R-Y

■ When you press COMPUTER:

COMPUTER 1 → COMPUTER 2

Remote control unit

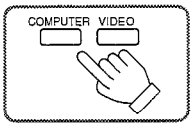

Projector

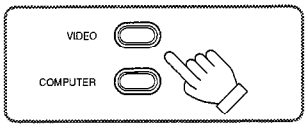

Screen display

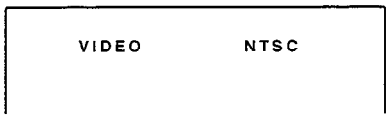

* When the input is switched, the line display (ex. VIDEO) and the source display (ex. NTSC) are shown on the upper part of the screen (they disappear in about five seconds). However, they will not be shown if LINE DISPLAY in "Setting and Adjusting Other Functions (OPTIONS)" on page 45 is set to OFF.
(For setting the source, see page 48.)

Note

- **To select the proper audio input for video input**
  The video input terminal (AV IN input terminal) can be switched with the VIDEO button. However, since this projector has only a single audio input terminal, reconnect audio input in accordance with the AV device to be used.

3. Adjusting the screen size

■ Adjust the screen size with the remote control's ZOOM (T/W) buttons.

■ To enlarge the screen size:

Press the ZOOM (W) button.

■ To reduce the screen size:

Press the ZOOM (T) button.

Remote control unit

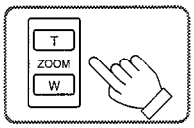

Note

- The adjustment of the screen size (zoom adjustment) can also be made on the setting menu.
  For operating the setting menu, refer to "Making Basic Settings" on page 33.

■ **Remote control unit**

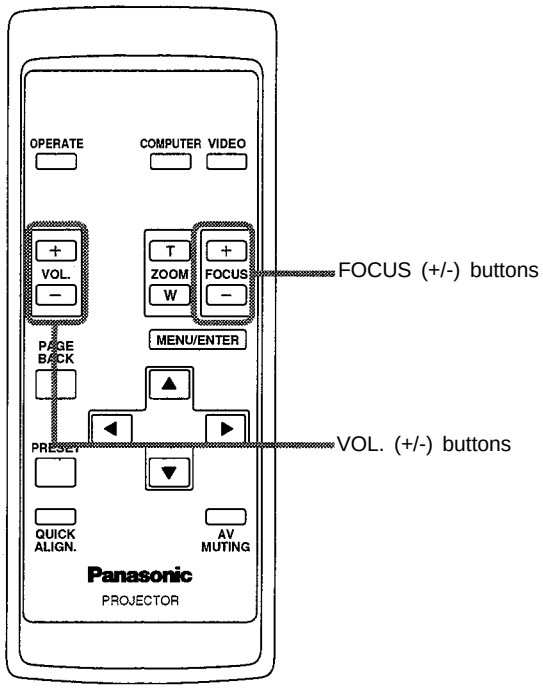

4. Adjusting focus

■ **Adjust focus with the remote control's FOCUS (+/–) buttons.**

■ **To focus on farther points:**

Press the FOCUS (+) button.

■ **To focus on nearer points:**

Press the FOCUS (-) button.

Remote control unit

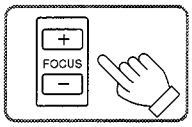

Note

- Focus adjustment can also be made on the setting menu. For operating the setting menu, refer to "Making Basic Settings" on page 33.

5. Adjusting sound volume

■ **Adjust sound volume with the remote control's VOL. (+/–) buttons.**

■ **When you press the VOL. (+) button:**

The sound volume becomes higher. (0 → 50)

■ **When you press the VOL. (–) button:**

The sound volume becomes lower. (50 → 0)

- When you press either button, the corresponding AUDIO-VOL. level is displayed on the screen (the display will disappear in about five seconds).

Remote control unit

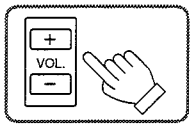

Screen display

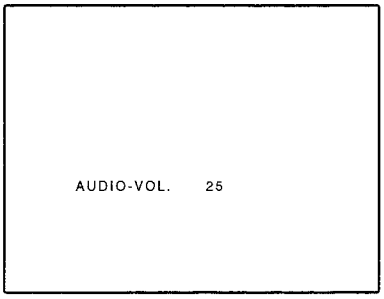

Note

- Sound volume can be adjusted on the setting menu. For operating the setting menu, refer to "Making Basic Settings" on page 33.

■ **Remote control unit**

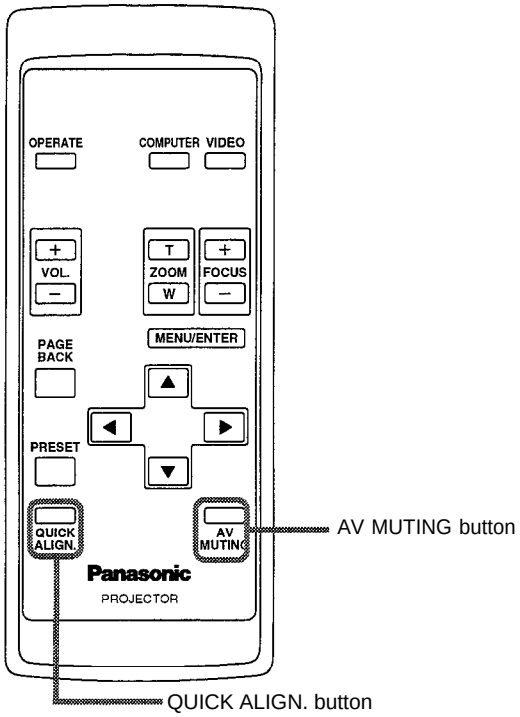

■ **Projector's button**

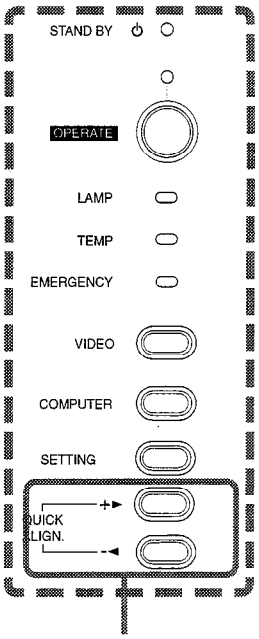

• For Operating Other Functions

■ **To turn off video image and audio sound temporarily**

Press the AV MUTING button.

■ **Press once:**

Video image and audio sound turn off (do not come out).

■ **Press again:**

Video image and audio sound come out again.

Remote control unit

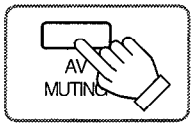

■ **To use the quick alignment function**

The quick alignment function is used to automatically adjust (set) the screen settings of "TRACKING, PHASE, H. POS. and V. POS." of computer system input video.

• Use either the remote control's or projector's button.

■ **When using the remote control unit:**

Press the QUICK ALIGN. button.

■ **When using the projector:**

Clear the menu display, and press the projector's QUICK ALIGN. "+ ►" and "- ◄" buttons at the same time.

* During the automatic adjustment, "QUICK ALIGNMENT" appears on the screen and disappears automatically after the adjustment is completed.

Remote control unit

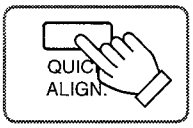

Projector

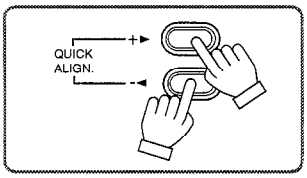

Screen display

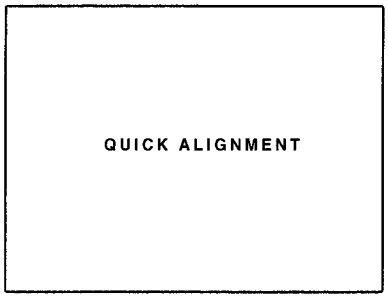

Note

• **This function works only for computer system inputs.**
It does not work for AV inputs.

CAUTION

• **When performing automatic adjustment using the quick alignment function:**
Use a bright, still-picture screen. It may not function correctly on a dark or motion-picture screen.
If the condition adjusted by using the quick alignment function is not good, manually adjust TRACKING, PHASE, H. POS. and V. POS. (see pages 33, 39 and 40).

■ Projector button

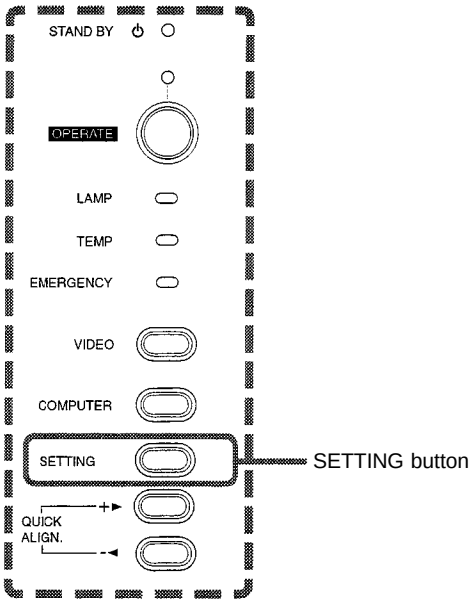

■ Remote control unit

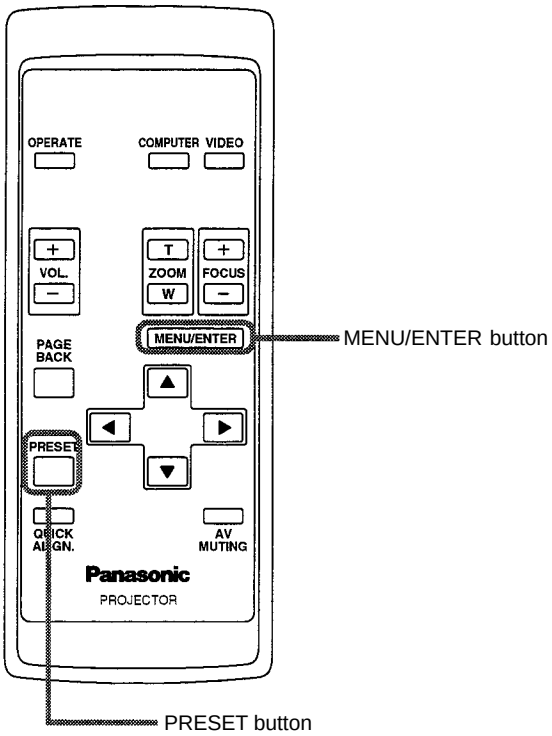

■ To display the SETTING menu

The setting menu is used to make basic adjustments and settings (TRACKING, PHASE, H. POS., V. POS. FOCUS, ZOOM and AUDIO-VOL.) of the video picture being projected after installation (connection) or after inputs are switched. For operating the setting menu, refer to “Making Basic Settings” on page 33.

- **Press the projector’s SETTING button.**
  The setting menu is displayed on the screen.

Projector

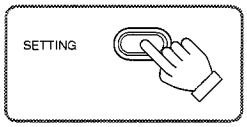

■ To display the MAIN menu

The main menu is used to adjust or set the projected video picture and the projector’s condition, etc. (PIXEL CLOCK, POSITION, PICTURE, SOUND, OPTIONS, SOURCE DECODER and LANGUAGE). For operating the main menu, refer to pages 36 to 49.

- **Press the remote control’s MENU/ENTER button.**
  The main menu appears on the screen.

Remote control unit

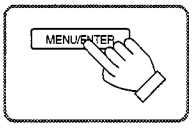

Note

- **To change the menu language displayed**
  English is set when the projector is shipped from the factory. The language displayed can be selected from the following six languages: 日本語 (Japanese), ENGLISH, DEUTSCH (German), ESPAÑOL (Spanish), ITALIANO (Italian), and FRANÇAIS (French). However, some words such as “QUICK ALIGNMENT” are displayed only in English. Pronouns such as line display and source display are similarly treated.

■ To use the remote control’s PRESET button

The PRESET button is used for adjustments made on the main menu or setting menu.

- **When resetting only the selected settings to the factory-set values, press the remote control’s PRESET button.**
  Only the selected item’s setting is reset to the factory-set value.

Remote control unit

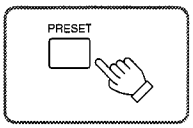

Notes

- This button works only for numeric values. It does not work for switching between ON and OFF.
- For items such as PIXEL CLOCK (TRACKING and PHASE), POSITION (H. POS. and V. POS.), SOUND (TREBLE and BASS), both settings are reset at the same time.

Operating the Setting Menu

Making Basic Settings

■ Projector's buttons

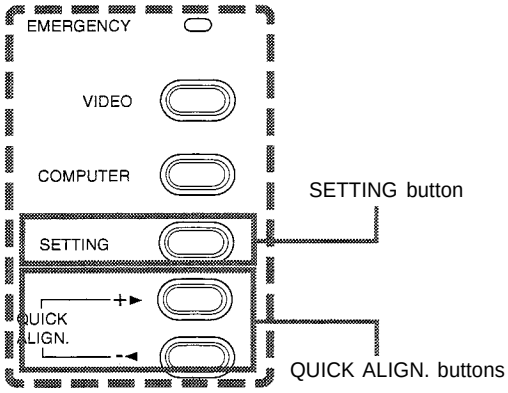

■ Setting menu

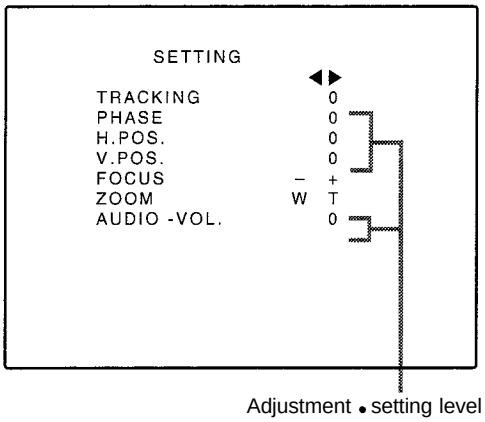

Description of adjustment and setting items

TRACKING : If wide vertical stripes appear on the screen, adjust the lateral video size and display area so that they disappear. (-255 ↔ 0 ↔ +255)

PHASE : If characters on the screen flicker or become dim, adjust so they become clear. (-127 ↔ 0 ↔ +127)

H. POS. : If the screen position is displaced to the right or left, adjust the horizontal position of the screen. (-255 ↔ 0 ↔ +255)

V. POS. : If the screen position is displaced upward or downward, adjust the vertical position of the screen. (-120 ↔ 0 ↔ +120)

FOCUS : Adjust the focus of video picture.
-: Focuses on near points.
+: Focuses on farther points.

ZOOM : Adjust the screen size (angle of view).
T : Becomes smaller.
W : Becomes larger.

AUDIO-VOL. : Adjust the sound level. (0 ↔ 50)

Here, we make basic video adjustment and sound volume adjustment which are set up after installation (connection).

Notes

- This adjustment menu (setting menu) can be displayed with only the projector's button. After displaying the setting menu, you can select or set (adjust) items with cursor buttons on the remote control unit.
- If settings and connections are changed, adjust and set those items again.
- After this adjustment (setting menu), if video picture adjustment is necessary by using the devices connected, perform the details setting and adjustment on the main menu (pages 36 to 49).
- For computer-related inputs, use of the quick alignment function allows automatic adjustment of TRACKING, PHASE, H. POS. and V. POS. (See pages 33, 39 and 40).

1 Press the SETTING button of the projector.

- The setting menu is displayed on the screen.

2 Press the SETTING button to select the desired item.

- The selected item is shown in magenta color. Each time you press the button, the selected item changes as follows:

Memo

To select items using the remote control unit:
Items can be selected using the cursor buttons ▲ (backward) or ▼(forward) on the remote control unit. In this case, menu clearing in the above order is not available. The selection changes from AUDIO-VOL to TRACKING directly.

3 Adjust and set the selected item using the QUICK ALIGN. buttons +► or -◄ .

- To adjust and set multiple items, repeat steps 2 and 3.
- To reset the adjustment value of the selected item (TRACKING, PHASE, H. POS. or V. POS.) to the factory-set value, press the remote control's PRESET button. This button does not work for focus, zoom or sound volume.

Memo

To adjust and set items using the remote control unit:
Items can be adjusted and set using the cursor buttons ◄ or ► on the remote control unit.

4 Clear the setting menu by pressing the SETTING button repeatedly.

Memo

To clear the setting menu using the remote control unit:
You can also clear the setting menu by pressing the PAGE BACK button on the remote control unit.

Memo

Using the quick alignment function:
This function works only for computer-related signals inputted. Press the remote control's QUICK ALIGN. button, or after clearing the menu displayed, press the projector's QUICK ALIGN. buttons "+ ► " and "- ◄" at the same time. TRACKING, PHASE, H. POS. and V. POS. are automatically adjusted.
During the adjustment, "QUICK ALIGNMENT" appears on the screen, and disappears after the adjustment finishes.

Operating the Main Menu

Configuration the Main Menu (AV Input) For computer inputs, see the following page.

You can adjust video quality (PICTURE), audio quality (SOUND), etc. using the menus.
The menus are configured as follows:

Main menu (AV inputs : During AV IN input signal)

- PIXEL CLOCK
  - TRACKING : Normally, no adjustment is required. The lateral size and display area of video image are adjusted.
  - PHASE : Normally, no adjustment is required. Flickering or dim video image is adjusted.
- POSITION
  - V. POS. : The vertical position of the video image being projected is adjusted.
  - H. POS. : The horizontal position of the video image being projected is adjusted.
- PICTURE
  - BRIGHTNESS : The brightness of the video image being projected is adjusted.
  - CONTRAST : The contrast of the video image being projected is adjusted.
  - SHARPNESS : The sharpness of the video image being projected is adjusted.
  - COLOR : The color density of the video image being projected is adjusted.
  - TINT : The tint of the video image being projected is adjusted. (Displayed only for NTSC signal)
  - ALL RESET : All the items adjusted are reset.
- SOUND
  - TREBLE : The treble of the audio sound being input is adjusted.
  - BASS : The bass of the audio sound being input is adjusted.
- OPTIONS
  - MENU AUTO OFF : Sets whether to turn off menu display automatically (YES) or not (NO).
  - LINE DISPLAY : Sets whether to make the line display effective (ON) or not (OFF) for about 5 seconds after input switching.
  - RIGHT LEFT REV. : Video image is reversed right-to-left (for upside-down hanging (ceiling)).
  - TOP BOTTOM INV. : Video image is inverted top-to-bottom (for upside-down hanging (ceiling)).
  - CLAMP : Sets the clamp pulse's position at the back porch (BP) or on the sink tip (ST). Normally, the clamp pulse is used at BP If, with some PCs or workstations, the screen becomes unstable such as being too dark or too bright, try to switch to ST.
  - RESIZE : Does not work with AV (video) input. (RESIZE is shown in gray.)
  - BACK COLOR : Specifies the background color when there is no video signal. Background color can be selected from BLUE, CYAN, BLACK, GREEN, MAGENTA, RED, and YELLOW.
  - COLOR TEMP. : Adjusts the color temperature of the image being projected. Make adjustment when the image becomes reddish or bluish.
    Color temperature can be set to LOW, MIDDLE, or HIGH.
  - ASPECT CHANGE : Selects the vertical-to-horizontal ratio of the image projected. The factory-set ratio is 4 : 3. When projecting high-vision video image, a ratio of 16 : 9 can be selected.
  - SLEEP TIME : Sets the sleep time.
    After an input signal is no longer detected. The projector goes into a stand-by state. The stand-by state is not entered immediately. It takes time (the sleep time). This time is selectable : 10, 20, 30, 60 minutes.
  - LAMP TIME : Indicates the accumulated used hours of the light-source lamp.
- SOURCE : Normally used in AUTO. If use in AUTO is unstable such as color not appearing, the screen image is disturbed or intermitted, then set to the dedicated source (forced mode) in accordance with the input signal.
- DECODER : Normally, set to AUTO. The color system of an input signal is automatically identified and shown in ( ). When use in AUTO is unstable such as no color being shown, set the dedicated color system in accordance with the input signal. You can select from AUTO, NTSC, NTSC4.43, PAL, and SECAM.
- LANGUAGE : Text on the screen can be changed to a language other than English. Languages that can be displayed are the following six : 日本語 (Japanese), ENGLISH, DEUTSCH (German), ESPAÑOL (Spanish), ITALIANO (Italian), and FRANÇAIS (French). However, some text such as "QUICK ALIGNMENT", etc. are shown only in English.

Configuration of the Main Menu (Computer-related input)

Main menu (Computer-related inputs : During COMPUTER IN-1 or -2 input signal)

PIXEL CLOCK
- TRACKING : The lateral size and display area of video image are adjusted.
- PHASE : Flickering or dim video image is adjusted.

POSITION
- V. POS. : The vertical position of the video image being projected is adjusted.
- H. POS. : The horizontal position of the video image being projected is adjusted.

PICTURE
- BRIGHTNESS : The brightness of the video image being projected is adjusted.
- CONTRAST : The contrast of the video image being projected is adjusted.
- R-GAIN : The gain in red signal of the video image being projected is adjusted.
- G-GAIN : The gain in green signal of the video image being projected is adjusted.
- B-GAIN : The gain in blue signal of the video image being projected is adjusted.
- TEXT MODE : Adjust easiness for reading text during RESIZE.
  - Normal : Normal
  - Text 1 : Display the outline of small letters already.
  - Text 2 : Makes the outline of large letters sharp.
- ALL RESET : All the items adjusted are reset.

SOUND
- TREBLE : The treble of the audio sound being input is adjusted.
- BASS : The bass of the audio sound being input is adjusted.

OPTIONS
- MENU AUTO OFF : Sets whether to turn off menu display automatically (YES) or not (NO).
- LINE DISPLAY : Sets whether to make the line display effective (ON) or not (OFF) for about 5 seconds after input switching.
- RIGHT LEFT REV. : Image is reversed right-to-left (for upside-down hanging (ceiling)).
- TOP BOTTOM INV. : Image is inverted top-to-bottom (for upside-down hanging (ceiling)).
- CLAMP : Sets the clamp pulse's position at the back porch (BP) or on the sink tip (ST). Normally, the clamp pulse is used at BP If, with some PCs or workstations, the screen becomes unstable such as being too dark or too bright, try to switch to ST.
- RESIZE : When the number of pixels (resolution) sought by the video image input is smaller than that (resolution) of D-ILA device, the video image is then enlarged to a virtually full screen size of D-ILA device and projected. (Resizing indication)
- BACK COLOR : Specifies the background color when there is no image signal. Background color can be selected from BLUE, CYAN, BLACK, GREEN, MAGENTA, RED, and YELLOW.
- COLOR TEMP. : Adjusts the color temperature of the video image being projected. Make adjustment when the video image becomes reddish or bluish.
  Color temperature can be set to LOW, MIDDLE, or HIGH.
- ASPECT CHANGE : Selects the vertical-to-horizontal ratio of the video image projected. The factory-set ratio is 4 : 3. When projecting high-vision image, a ratio of 16 : 9 can be selected.
- SLEEP TIME : Sets the sleep time.
  After an input signal is no longer detected. The projector goes into a stand-by state. The stand-by state is not entered immediately. It takes time (the sleep time). This time is selectable : 10, 20, 30, 60 minutes.
- LAMP TIME : Indicates accumulated used hours of the light-source lamp.

SOURCE : Normally used in AUTO. If use in AUTO is unstable such as color not appearing, the screen image is disturbed or intermitted, then set to the dedicated source (forced mode) in accordance with the input signal.

DECODER : Does not work with computer-related inputs. (The color system is indicated in gray.)

LANGUAGE : Text on the screen can be changed to a language other than English. Languages that can be displayed are the following six : 日本語 (Japanese), ENGLISH, DEUTSCH (German), ESPAÑOL (Spanish), ITALIANO (Italian), and FRANÇAIS (French). However, some text such as "QUICK ALIGNMENT", etc. are shown only in English.

Operating the Main Menu (Basic Operation of the Main Menu)

■ Remote control unit

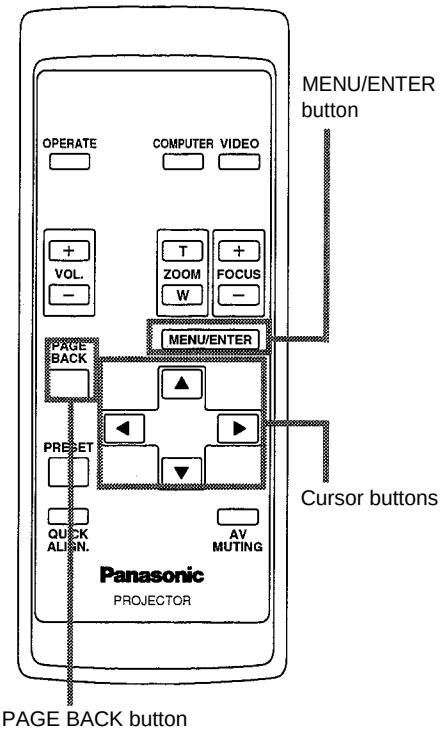

■ Main menu

(Example: During video signal input)

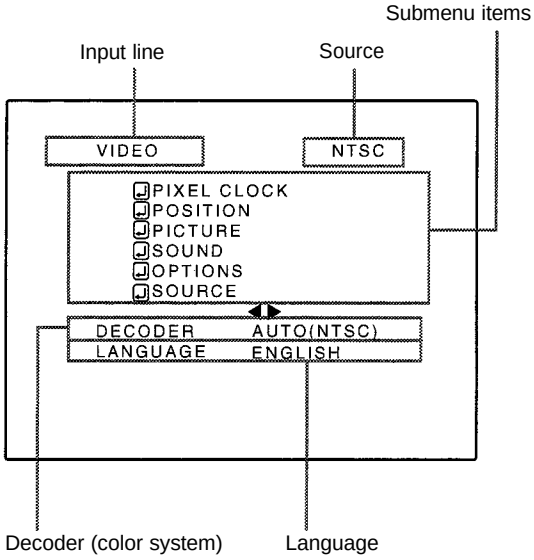

For projector's menus, the setting menu and the main menu are available.

Here, we explain about the operation of the main menu. (see pages 36 to 49)

For the setting menu, refer to "Making Basic Settings" on page 33.

1 Press the MENU/ENTER button.

- The main menu is displayed on the screen.

2 Select an item with the cursor button ▲ or ▼.

- The selected item (displayed text) is shown in magenta color on the screen.

3 Set (adjust) the item.

■ When you have selected DECODER or LANGUAGE,

- Set it with the cursor button ◄ or ►

* To finish the main menu, press the PAGE BACK button.

■ When you have selected an item on the submenu,

- Press the MENU/ENTER button to display the submenu, then set (adjust) the item with the cursor buttons ◄ / ► or ▲ / ▼.

*To return to the main menu, press PAGE BACK again. (To finish the main menu from the submenu, press PAGE BACK twice.)

■ About main menu display:

Line display: The selected input-mode designation is displayed. For input-mode designation, "Y/C", "VIDEO", "Y, PB/B-Y, PR/R-Y", "COMPUTER 1" and "COMPUTER 2" are available.

Source display: The type of signal being input is displayed. With this projector, unique designations are previously given to specific horizontal and vertical frequencies. This allows the source selected under SOURCE (submenu item) to be indicated. The source setting can be selected from AUTO mode and dedicated (forced) modes. When AUTO is selected, the horizontal and vertical frequencies of a signal being input are detected and the matched designation is displayed in ( ).
Display example: "AUTO (NTSC)"
Therefore, be careful as the source display does not always correspond to the indication or type of the input signal.
For the unique designations for the specific horizontal and vertical frequencies, see pages 21 and 48.

Submenu item display:

PIXEL CLOCK	: See page 39.
POSITION	: See page 40.
PICTURE	: See pages 41-43.
SOUND	: See page 44.
OPTIONS	: See pages 45-47.
SOURCE	: See pages 48 and 49.

Decoder (Color system) display: See page 37.

Language display : See page 38.

Changing the Color System

■ Remote control unit

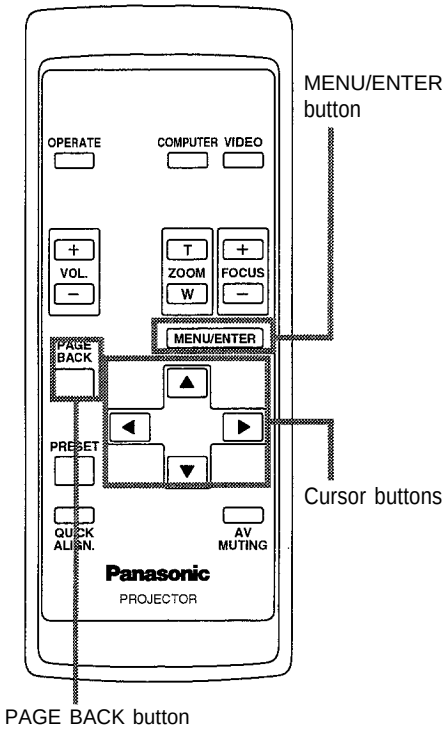

■ Main menu

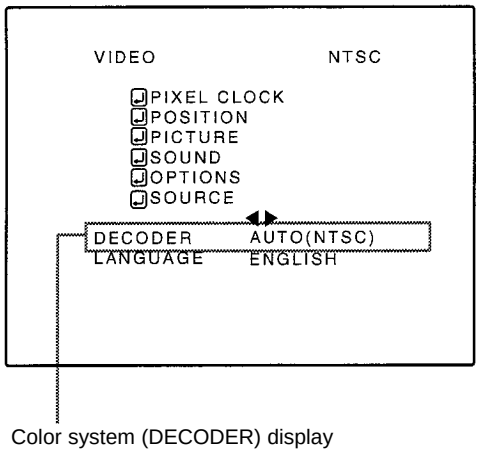

Note

- When computer-related signal is input, the display of the color system is changed to gray color, making operation impossible. When video signals from AV devices are input, the item for the color system can be set.

AUTO is set for the color system when the projector is shipped from the factory. Normally, use it in AUTO. If operation in AUTO is unstable such as with color not being shown, set to a dedicated color system in accordance with the color system of the signal being input.

1 Press the MENU/ENTER button.

- The main menu is shown on the screen.

2 Select "DECODER" with the cursor button ▲ or ▼.

- The selected item (displayed in text) is shown in magenta color on the screen.

3 Set the color system with the cursor button ◄ or ►.

- Each time you press the cursor button ◄ or ►, the color system changes as follows.

► : Forward / ◄ : Backward

AUTO ..... Normally, set to AUTO. The color system of a signal being input is automatically identified.

NTSC ..... Dedicated to NTSC.

NTSC4.43 ..... Dedicated to NTSC4.43.

PAL ..... Dedicated to PAL.

SECAM ..... Dedicated to SECAM.

Memo

About automatic signal identification

- AUTO is selected when shipped from the factory. In AUTO, the color system (DECODER) of the signal being input is automatically identified and indicated in ( ). Refer to the main menu display.
- If operation in AUTO is unstable such as with color not being shown, set to a dedicated color system in accordance with the color system of the signal being input. When the dedicated color system is set, be careful as automatic identification does not work.

● **To finish the main menu, press the PAGE BACK button.**

Changing the Language Display

■ Remote control unit

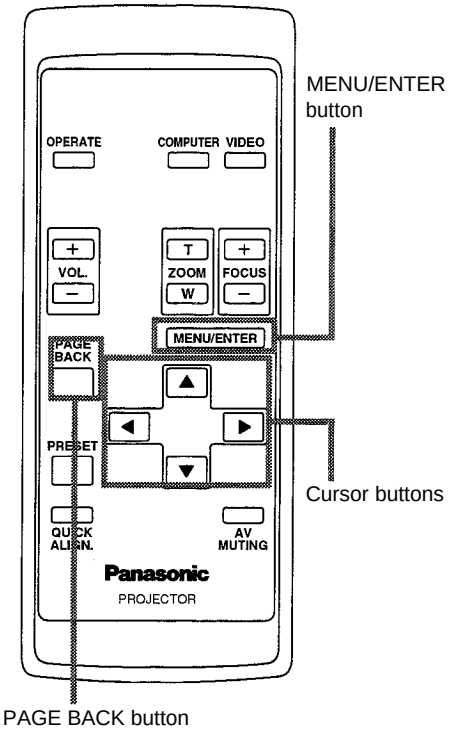

■ Main menu

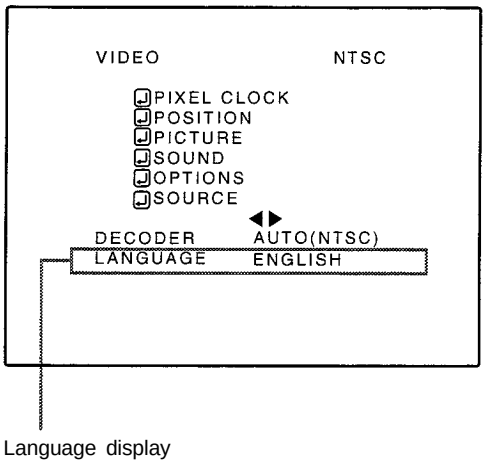

Note

- The selected item is shown in magenta color. Items shown in gray cannot be operated or set in the current mode.

The language in the menu display is set to English when shipped from the factory. When you want to change to another language, set it as follows.

1 Press the MENU/ENTER button.

- The main menu is shown on the screen.

2 Select "LANGUAGE" with the cursor button▲ or ▼

- The selected item (displayed in text) is shown in magenta color on the screen.

3 Set the desired language with the cursor button◄ or ►.

- Each time you press the cursor button ◄ or ►, the selected language changes as follows.

► : Forward / ◄ : Backward

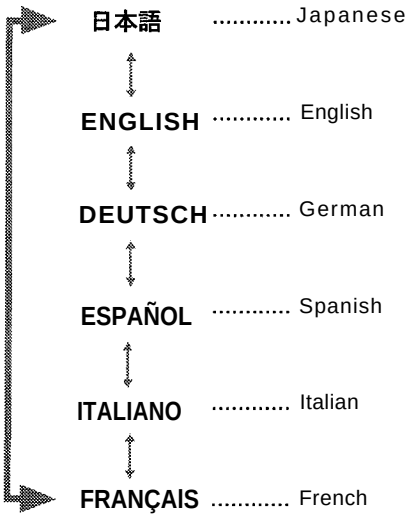

Memo

About language display

English is selected when the projector is shipped from the factory. The languages in the menu display are the following six : 日本語 (Japanese), ENGLISH, DEUTSCH (German), ESPAÑOL (Spanish), and FRANÇAIS (French).

However, some text such as "QUICK ALIGNMENT" is displayed only in English. Unique designations such as line display and source display are similarly indicated.

● To finish the main menu, press the PAGE BACK button.

Adjusting the Pixel Clock

■ Remote control unit

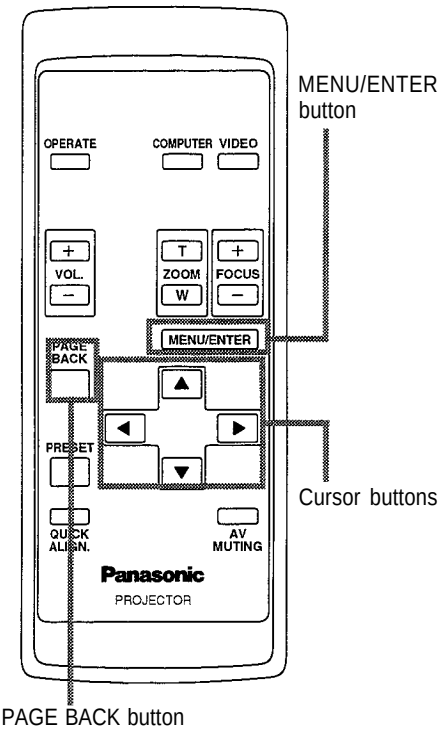

■ Main menu

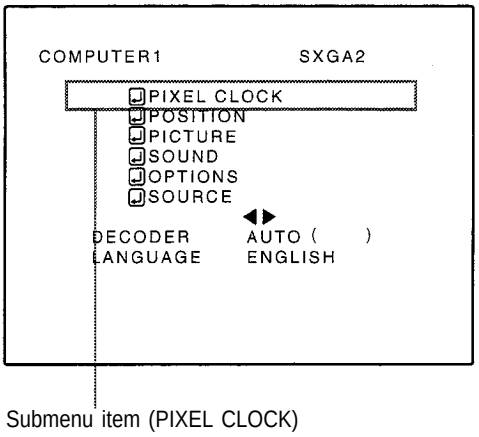

Notes

- The selected item is shown in magenta color. Items shown in gray color cannot be operated or set in the current mode.
- A dim screen could be caused by insufficient adjustment of brightness and contrast. Before adjusting phase, make sure that brightness and contrast are correctly adjusted.

The pixel clock should be adjusted mainly for computer-related inputs. (Normally, it does not need to be adjusted for video inputs.) If a wide stripe appears on the screen, adjust the lateral size of video image and the display area (tracking adjustment) so the stripe disappears. Also, if text on the video screen appears flickering or dim, make adjustment so it becomes clear (phase adjustment).

1 Press the MENU/ENTER button.

- The main menu appears on the screen.

2 Select "PIXEL CLOCK" with the cursor button ▲ or ▼.

- The selected item (displayed in text) is shown in magenta color on the screen.

3 Press the MENU/ENTER button.

- The submenu items of the PIXEL CLOCK menu appears on the screen.

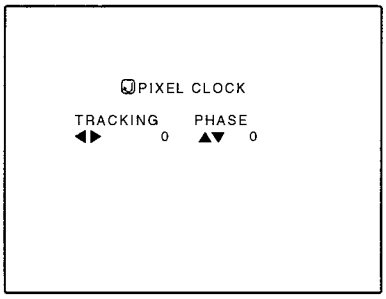

(PIXEL CLOCK menu)

4 Adjust "TRACKING" and "PHASE" with the cursor buttons.

- Adjust the tracking and phase of the video screen being projected. To adjust the phase, first check for correct tracking adjustment.

Adjustment item	Button	Adjustment content
TRACKING	◄	The screen shrinks laterally (right-to-left). (-255 ← 0 ← +255)
	►	The screen extends laterally (right-to-left). (-255 → 0 → +255)
PHASE		Set to a position where text appears clear.
	▲	(-127 → 0 → +127)
	▼	(-127 ← 0 ← +127)

* To reset to the factory-set adjustment values, press the remote control's PRESET button.
Tracking and phase are reset to the factory-set adjustment values.

● To return to the main menu, press the PAGE BACK button. To finish the main menu, press PAGE BACK again.

- To finish the menu display from the submenu display (PIXEL CLOCK menu), press PAGE BACK twice.

Adjusting the Screen Position

■ Remote control unit

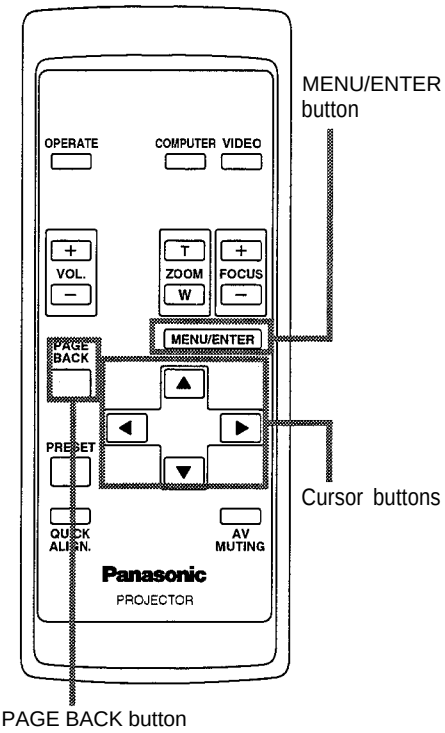

■ Main menu

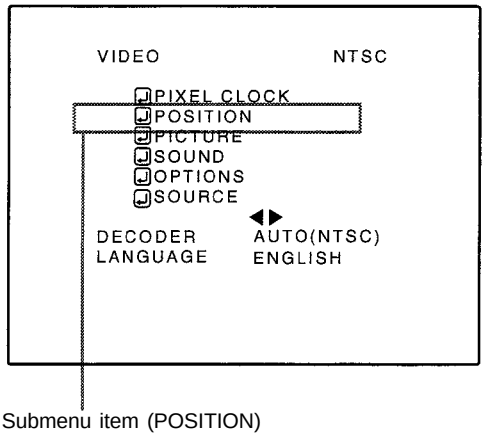

Note

- The selected item is shown in magenta color. Items shown in gray color cannot be operated or set in the current mode.

Adjust the position of the screen if it is displaced.

1 Press the MENU/ENTER button.

- The main menu appears on the screen.

2 Select "POSITION" with the cursor button ▲ or ▼ .

- The selected item (displayed in text) is shown in magenta color on the screen.

3 Press the MENU/ENTER button.

- The submenu items of the POSITION menu appear on the screen.

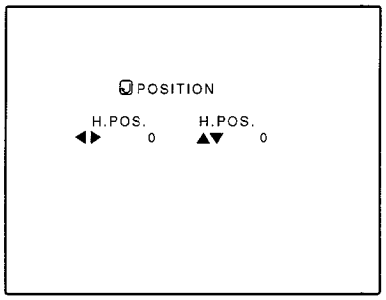

(POSITION menu)

4 Adjust "H. POS." and "V. POS." with the cursor buttons.

- Adjust the horizontal and vertical positions of the video picture screen being projected.

Adjustment item	Button	Adjustment content
H. POS.	◄	The screen moves to the left. (-255 ← 0 ← +255)
	►	The screen moves to the right. (-255 → 0 → +255)
V. POS.	▲	The screen moves upwards. (-120 → 0 → +120)
	▼	The screen moves downwards. (-120 ← 0 ← +120)

* To reset to the factory-set adjustment values, press the remote control's PRESET button. H. POS. and V. POS. are reset to the factory-set adjustment values.

● To return to the main menu. Dress the PAGE BACK button. To finish the main menu, press PAGE BACK again.

- To finish the menu display from the submenu display (POSITION menu), press PAGE BACK twice.

Adjusting Picture Quality

■ Remote control unit

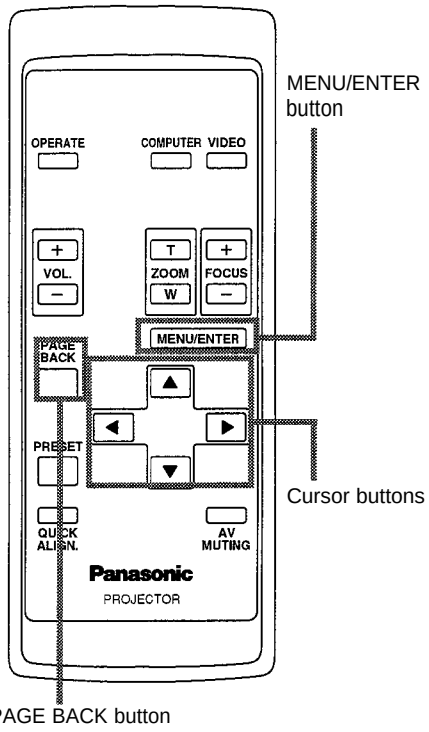

■ Main menu

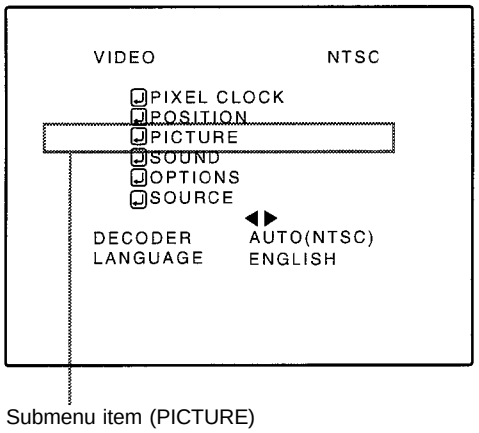

Notes

- The selected item is shown in magenta color. Items shown in gray color cannot be operated or set in the current mode.
- Adjustment items (on the PICTURE menu) are different when AV signals are input and when computer-related signals are input.

Adjust brightness, contrast, etc. so you have the desired screen. Adjustment items (on the PICTURE menu) are different when video-related signals are input and when computer-related signals are input.

1 Press the MENU/ENTER button.

- The main menu appears on the screen.

2 Select "PICTURE" with the cursor button▲ or ▼.

- The selected item (displayed in text) is shown in magenta color on the screen.

3 Press the MENU/ENTER button.

- The submenu items of the PICTURE menu appear on the screen.

■ When AV signals are input

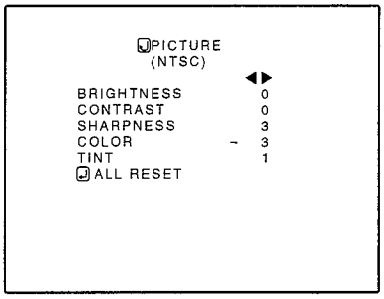

(PICTURE menu)

■ When computer-related signals are input

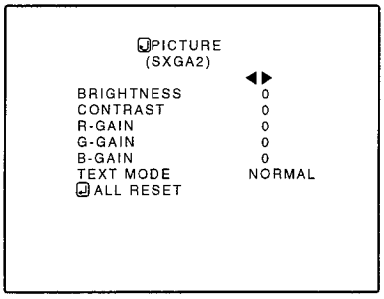

(PICTURE menu)

4 Select the item to adjust with the cursor button▲ or ▼.

- The items to adjust (shown in text) is displayed in magenta color.

(To be continued on the next page)

Adjusting Picture Quality (Cont.)

■Remote control unit

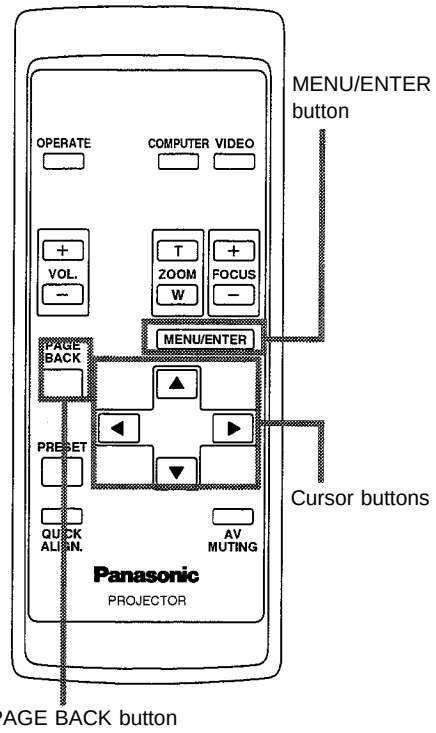

■Submenu items

[PICTURE menu]

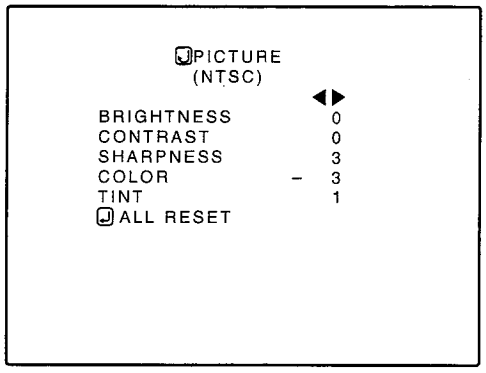

Notes

- The selected item is shown in magenta color. Items shown in gray color cannot be operated or set in the current mode.
- Adjustment items (on the PICTURE menu) are different when AV signals are input and when computer-related signals are input.

5 Make adjustment with the cursor button ◄ or ► .

■For video system input

- To adjust multiple items, repeat steps 4 and 5.
- To reset all items (to factory-set adjustment values “0”), select ALL RESET with the cursor buttons and press the MENU/ENTER button.
- To reset only the selected items (ALL RESET excluded) to the factory-set adjustment value, press the remote control’s PRESET button. The selected item is reset to the factory-set adjustment value.

Adjustment item	Button	Adjustment content
BRIGHTNESS	◄	Gets darker. (-30 ← 0 ← +30)
	►	Gets brighter. (-30 → 0 → +30)
CONTRAST	◄	Gets lower. (-30 ← 0 ← +30)
	►	Gets higher. (-30 → 0 → +30)
SHARPNESS	◄	Gets softer. (0 ← 7)
	►	Gets sharper. (0 → 7)
COLOR	◄	Gets softer. (-30 ← 0 ← +30)
	►	Gets deeper. (-30 → 0 → +30)
TINT	◄	Gets reddish. (-30 ← 0 ← +30)
	►	Gets greenish. (-30 → 0 → +30)
ALL RESET	MENU/ ENTER	Resets all adjustment values of items on the PICTURE menu to the factory-set values (0).

Notes

- The adjustment item, TINT, is displayed only for NTSC system. It is not displayed (cannot be adjusted) when PAL or SECAM system signals are input.
- When video signals are input to the COMPUTER IN-2 terminal, adjustment items “COLOR” and “TINT” are indicated but cannot be adjusted.

■For computer system input

- To adjust multiple items, repeat steps 4 and 5.
- To reset all items (to factory-set adjustment values “0”), select ALL RESET with the cursor buttons and press the MENU/ENTER button.
- To reset only the selected items (ALL RESET excluded) to the factory-set adjustment value, press the remote control’s PRESET button. The selected item is reset to the factory-set adjustment value.

(To be continued on the next page)

Adjusting Picture Quality (Cont.)

■Remote control unit

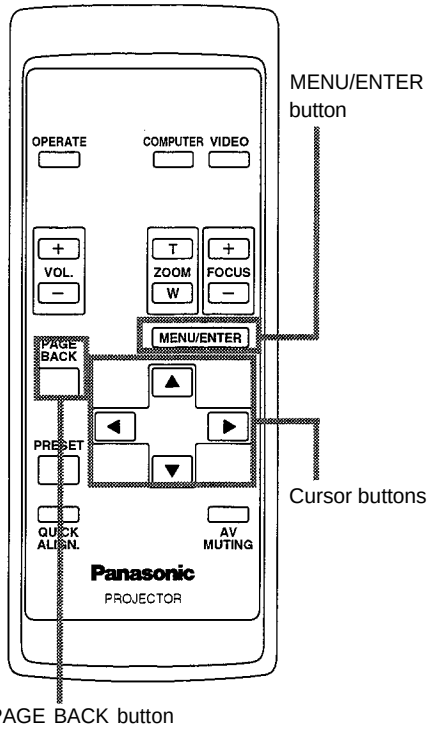

Adjustment item	Button	Adjustment content
BRIGHTNESS	◄	Gets darker. (-30 ←0 ←+30)
	►	Gets brighter. (-30 →0 →+30)
CONTRAST	◄	Gets lower. (-30 ←0 ←+30)
	►	Gets higher. (-30 →0 →+30)
R-GAIN	◄	Gets less reddish. (-30 ←0 ←+30)
	►	Gets more reddish. (-30 →0 →+30)
G-GAIN	◄	Gets less greenish. (-30 ←0 ←+30)
	►	Gets more greenish. (-30 →0 →+30)
B-GAIN	◄	Gets less bluish. (-30 ←0 ←+30)
	►	Gets more bluish. (-30 →0 →+30)
TEXT MODE		Sets a mode which allows easy text reading.
	◄	NORMAL ← TEXT1 ← TEXT2 ←
	►	→ NORMAL → TEXT1 → TEXT2 →
ALL RESET	MENU/ ENTER	Resets all adjustment values of items on the PICTURE quality menu to the factory-set status (adjustment values: 0, text mode: NORMAL).

■Submenu items

[PICTURE menu]

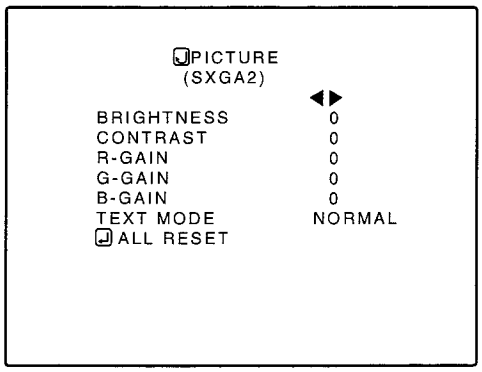

Notes

- The selected item is shown in magenta color. Items shown in gray color cannot be operated or set in the current mode.
- Adjustment items (on the PICTURE menu) are different when AV signals are input and when computer-related signals are input.

Note

- There is a relationship between the adjustment of items R-GAIN, G-GAIN, and B-GAIN and that of item CONTRAST. For example, when adjustment values are : R-GAIN: 0, G-GAIN: 5, B-GAIN: 0, and CONTRAST: 0, changing CONTRAST to 1 changes the adjustment values as follows: R-GAIN: 1, G-GAIN: 6, and B-GAIN: 1.
  Also, when the adjustment value of any of R-GAIN, G-GAIN, and B-GAIN has reached -30 (minimum) or +30 (maximum), CONTRAST cannot be adjusted to any higher value. For example, when R-GAIN is 0, G-GAIN is 5, B-GAIN is 0, and CONTRAST is 0, increasing CONTRAST allows the other adjustment values to increase until R-GAIN: 25, G-GAIN: 30, and B-GAIN: 25, then CONTRAST becomes 25 and cannot be adjusted to any higher value.

● To return to the main menu, press the PAGE BACK button.To finish the main menu, press PAGE BACK again.

- To finish the menu display from the submenu display (PICTURE menu), press PAGE BACK twice.

Adjusting Sound Quality

■ Remote control unit

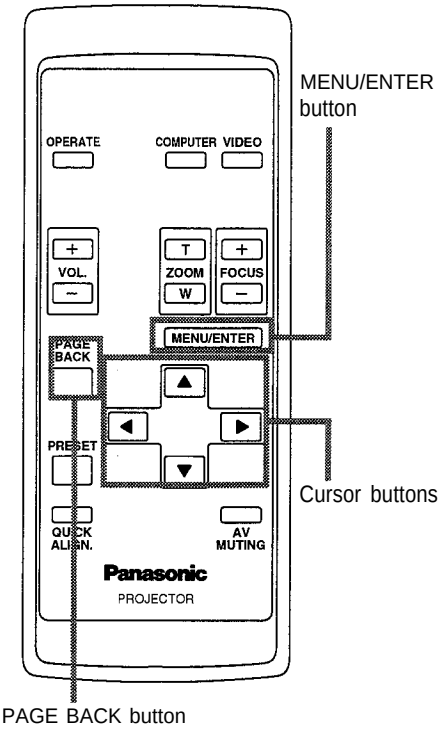

■ Main menu

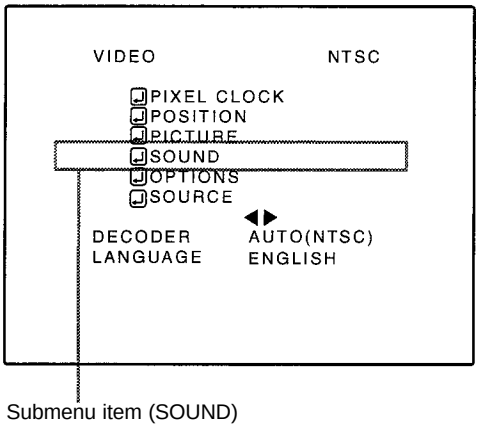

Note

- The selected item is shown in magenta color. Items shown in gray color cannot be operated or set in the current mode.

Adjust the quality (treble/bass) of sound.

1 Press the MENU/ENTER button.

- The main menu appears on the screen.

2 Select the "SOUND" with the cursor button ▲ or ▼.

- The selected item (displayed in text) is shown in magenta color on the screen.

3 Press the MENU/ENTER button.

- The submenu items of the SOUND menu appear on the screen.

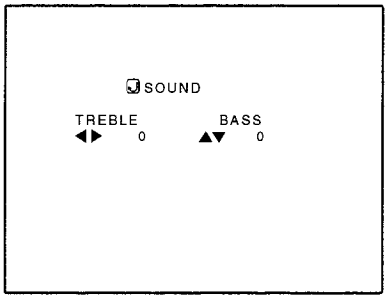

(SOUND menu)

4 Adjust "TREBLE" and "BASS" with the cursor buttons.

- Adjust the quality (TREBLE and BASS) of sound.

Adjustment item	Button	Adjustment content
TREBLE	◄	Gets weaker. (-5 ← 0 ← +5)
	►	Gets stronger. (-5 → 0 → +5)
BASS	▲	Gets stronger. (-5 → 0 → +5)
	▼	Gets weaker. (-5 ← 0 ← +5)

*To reset to the factory-set adjustment values, press the remote control's PRESET button. The treble and bass are reset to the factory-set adjustment values.

● To return to the main menu, press the PAGE BACK button. To finish the main menu, press PAGE BACK again.

- To finish the menu display from the submenu display (SOUND menu), press PAGE BACK twice.

Setting and Adjusting Other Functions (OPTIONS)

■ Remote control unit

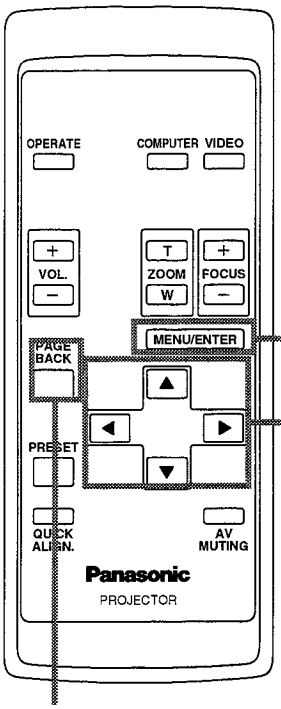

■ Main menu

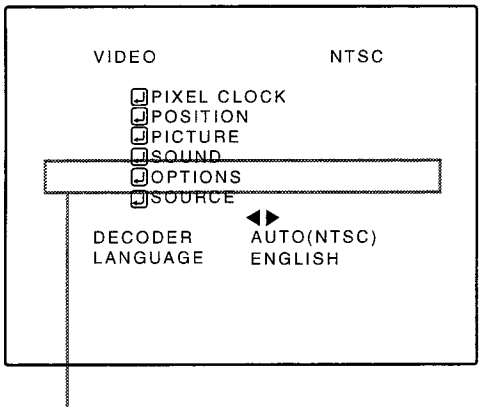

Notes

- The selected item is shown in magenta color. Items shown in gray color cannot be operated or set in the current mode.
- Items to be set (adjusted) are different when AV signals are input and when computer system signals are input.

The following optional functions can be set (adjusted).

- MENU AUTO OFF
- LINE DISPLAY
- RIGHT LEFT REV
- TOP BOTTOM INV.
- CLAMP
- RESIZE
- BACK COLOR
- COLOR TEMPERATURE
- ASPECT CHANGE
- SLEEP TIME
- LAMP TIME

Memo

About the lamp use time

The lamp use time indicates the accumulated used hours of the light-source lamp and cannot be set or adjusted. When you have replaced with a new light-source lamp, reset the lamp use time (see page 52).

Note

- The RESIZE function works for only computer system input. It does not work for video system input.

1 Press the MENU/ENTER button.

- The main menu appears on the screen.

2 Select the "OPTIONS" with the cursor button ▲ or ▼ .

- The selected item (displayed in text) is shown in magenta color on the screen.

3 Press the MENU/ENTER button.

- The submenu items of the OPTIONS menu are displayed.

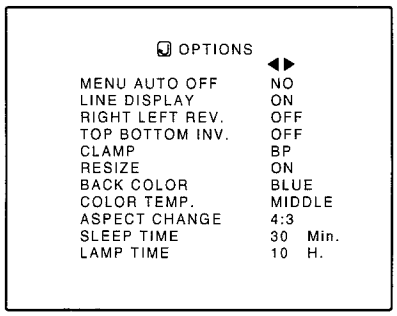

(OPTIONS menu)

4 Select the item to set (adjust) with the cursor button ▲ or ▼ .

- The item to set (adjust) is shown in magenta color.

(To be continued on the next page)

Setting and Adjusting Other Functions (OPTIONS) (Cont.)

■Remote control unit

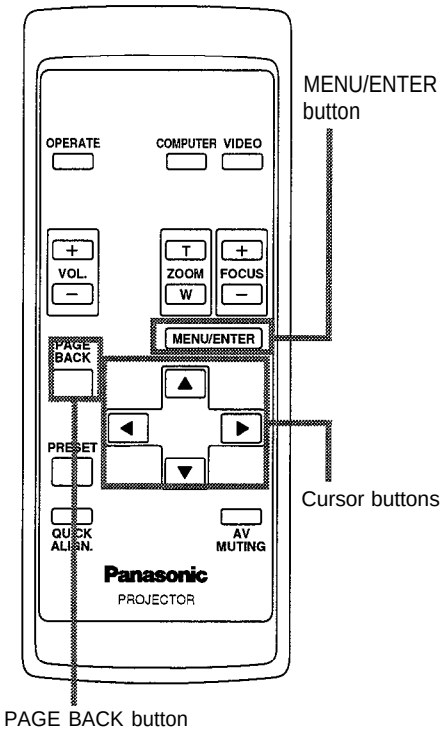

■Submenu items

[OPTIONS menu]

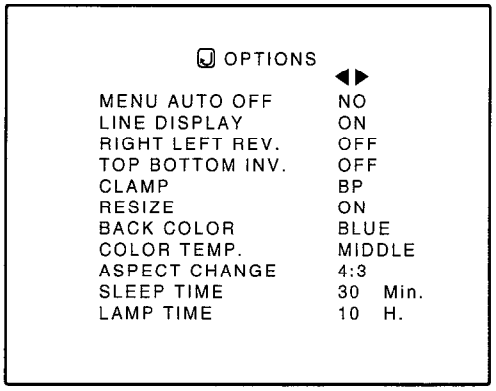

Notes

- The selected item is shown in magenta color. Items shown in gray color cannot be operated or set in the current mode.
- Items to be set (adjusted) are different when AV signals are input and when computer-system signals are input.
- When you turn the RESIZE function ON, allowing the screen to be enlarged virtually to its full size for projection (resizing display), the video image (resolution) becomes coarse.

5 Set (adjust) the desired item with the cursor button◄ or►.

- To adjust multiple items, repeat steps 4 and 5.

Adjustment item	Button	Adjustment content
MENU AUTO OFF	◄/►	Sets whether to clear the menu display automatically a fixed time later or not. (Factory setting : NO) **YES:** Clears the display automatically in about 25 seconds. **NO** : Does not clear the display automatically. **NO ◄——► YES**
LINE DISPLAY	◄/►	Sets whether to show the line display (Y/C, VIDEO, etc.) at the top of the projected screen or not. (Factory setting : ON) **OFF:** Does not show the line-display. **ON** : Shows the line display. (The line display disappears about 5 seconds after it is shown.) **OFF ◄——► ON**
RIGHT LEFT REV.	◄/►	Reverses video image right-to-left. (Factory setting : OFF) **OFF:** For the front method **ON** : For upside hanging from the ceiling **OFF ◄——► ON**
TOP BOTTOM INV.	◄/►	Inverses video image upside-down. (Factory setting : OFF) **OFF:** For normal set-up **ON** : For upside hanging from the ceiling **OFF ◄——► ON**
CLAMP	◄/►	Sets the clamp pulse's position at the back porch (BP) or on the sink tip (ST). Normally, the clamp is used at BP If, with some PCs or workstations, the screen becomes unstable such as being too dark or too bright, try to switch to ST (factory setting: BP) **BP** : The clamp pulse is positioned at the back porch. **ST** : The clamp pulse is positioned on the sink tip. **BP ◄——► ST**
RESIZE	◄/►	When the number of pixels (resolution) sought by the input video is smaller than that (resolution) of D-LA device, the video image is then enlarged to virtually full screen size of D-LA device and projected (resizing display). (Factory setting : ON) Does not work (cannot be set) for video system input. **OFF** : Does not enlarge the video image for projection. When the number of pixels sought by video image is smaller than that of D-ILA device, projection takes place on a small screen size with a black area around the screen. **ON** : Enlarges virtually to the full screen size of D-ILA device for projection (resizing display). **OFF ◄——► ON**

(To be continued on the next page)

Setting and Adjusting Other Functions (OPTIONS) (Cont.)

■Remote control unit

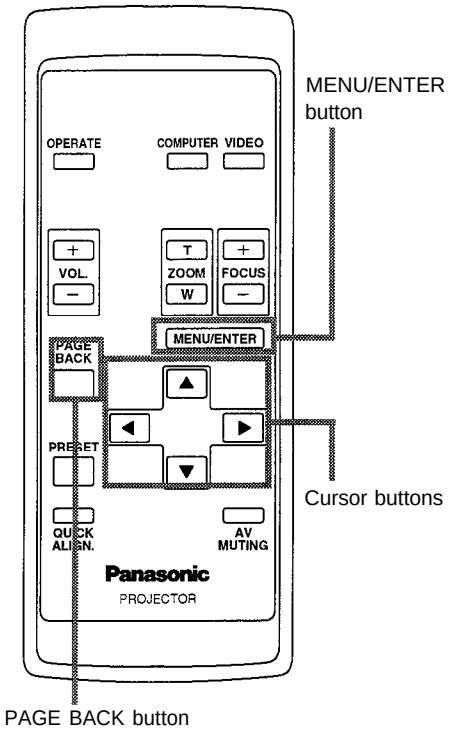

Adjustment item	Button	Adjustment content
BACK COLOR	◄/►	Sets background color when there is no input signal. (Factory setting : BLUE) BLUE ⟷ CYAN ⟷ BLACK ⟷ GREEN ↕ ↕ YELLOW ⟷ RED ⟷ MAGENTA
COLOR TEMP.	◄/►	Sets the color temperature of the video image being projected. Make adjustment when the image becomes reddish or bluish. (Factory setting : MIDDLE) **LOW** : Color temperature decreases (video image becoming reddish). **MIDDLE** : Results in middle color temperature. **HIGH** : Color temperature increases (video image becoming bluish). LOW ⟷ MIDDLE ⟷ HIGH
ASPECT CHANGE	◄/►	Sets the vertical-to-horizontal ratio (4 : 3 or 16 : 9) of the video image projected. (Factory setting : 4 : 3) **4 : 3 :** The aspect ratio of the screen becomes 4 : 3. Set it to 4 : 3 for video of NTSC, NTSC4.43, PAL, SECAM. **16 : 9:** The aspect ratio of the screen becomes 16 : 9. Set it to 16 : 9 for Hi-Vision devices (W-VHS VCR, etc.) 4 : 3 ⟷ 16 : 9
SLEEP TIME	◄/►	Sets the length of sleep time which automatically brings the projector into stand-by state. You can select one of the following sleep times : 10 minutes, 20 minute, 30 minutes, and 60 minutes. (Factory setting : 30 minutes) 10 ⟷ 20 ⟷ 30 ⟷ 60

■Submenu items

[OPTIONS menu]

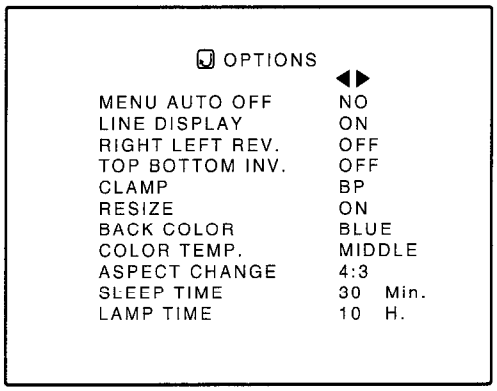

Notes

- The selected item is shown in magenta color. Items shown in gray color cannot be operated or set in the current mode.
- Items to be set (adjusted) are different when AV signals are input and when computer-system signals are input.

● **To return to the main menu, press the PAGE BACK button. To finish the main menu, press PAGE BACK again.**

- To finish the menu display from the submenu display (OPTIONS menu), press PAGE BACK twice.

Note

- When you view a conventional (normal) 4 : 3 video picture, which is not a wide video picture, do not use the 16 : 9 mode. The upper and lower parts of the picture will be invisible in that mode. View such an original video picture in 4 : 3 mode, respecting the producer's intention.

Changing (Setting) the Source

■Remote control unit

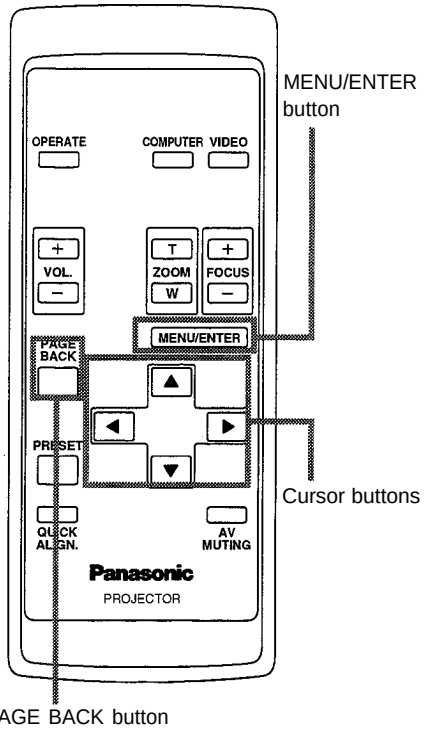

■Main menu

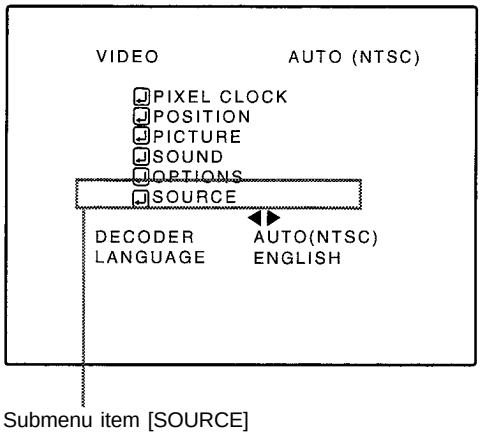

Notes

- The selected item is shown in magenta color. Items shown in gray color cannot be operated or set in the current mode.
- Items that can be set are different when video signals are input and when computer signals are input.
- For dedicated source signals (corresponding frequency, etc.) for computer signals, see page 21.

Normally, use the source setting in AUTO. If use in AUTO is unstable such as color not appearing, the screen image is disturbed or intermitted, then set to the dedicated source (forced mode) in accordance with the input signal.

- When shipped from the factory, the source settings are as follows:

Input mode	Factory setting	Input mode	Factory setting
VIDEO	NTSC	COMPUTER 1	AUTO
Y/C	NTSC	COMPUTER 2	AUTO
Y, PB/B-Y, PR/R-Y	AUTO	—	—

Notes

- Depending on the signal from a device connected, adjustment may be needed after a dedicated source is set. If that is the case, adjust the appropriate items.
- When the input mode (SOURCE) is VIDEO or Y/C, and if AUTO is set, the automatic detecting function may work, possibly causing the screen to be intermitted or disturbed. In that case, set to a dedicated source (forced mode).
- When special effect playback (fast-forward/ twice-speed/triple-speed) is performed on a video deck, etc, the picture may be disturbed or intermitted, depending on the device.

1 Press the MENU/ENTER button.

- The main menu appears on the screen.

2 Select a submenu item "SOURCE" using the cursor button ▲ or ▼.

- The SOURCE item (shown in text) is indicated in magenta color.

3 Press the MENU/ENTER button.

- The submenu items, SOURCE menu, appears on the screen.

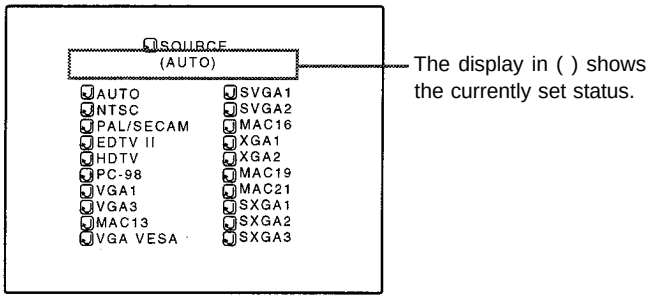

(SOURCE menu)

4 Select the item to set using the cursor buttons ▲/▼ or ◄/►.

- The item to set is shown in magenta color.

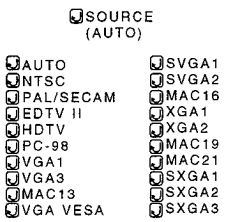

(To be continued on the next page)

Changing (Setting) the Source (Cont.)

■ Remote control unit

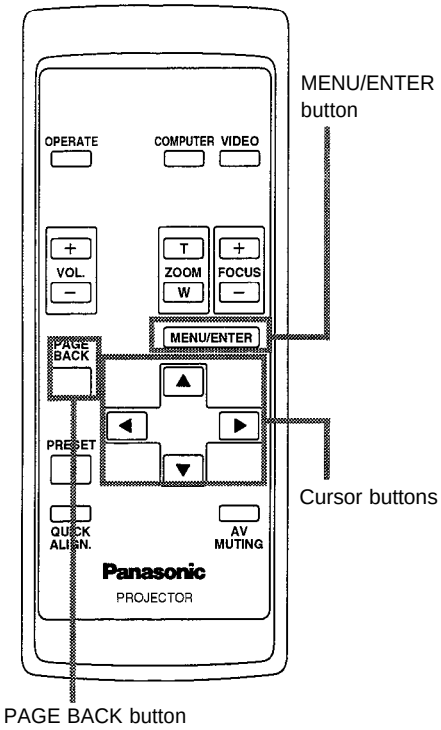

■ Submenu item

(SOURCE menu)

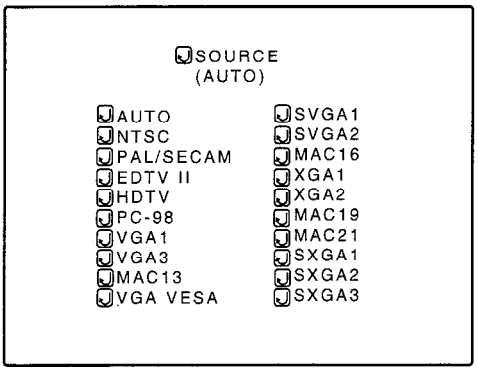

Notes

- The selected item is shown in magenta color. Items shown in gray color cannot be operated or set in the current mode.
- Items that can be set are different when video signals are input and when computer signals are input.
- For dedicated source signals (corresponding frequency, etc.) for computer signals, see page 21.

5 Press the MENU/ENTER button to set (fix) it.

■ When AUTO is selected:

The main menu is automatically cleared, completing the setting procedure, and the source display inputted appears.

- Both line display and source display appear on the screen and disappear in five seconds. However, they do not appear if the line display is set to OFF.

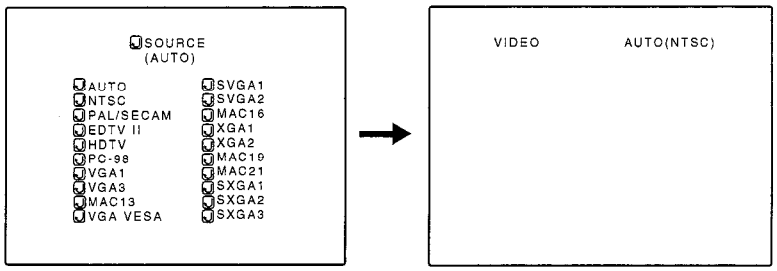

■ When other than AUTO is selected:

The selected item is shown in ( ) beneath the indicated text "SOURCE" at the top of the screen, completing the setting procedure.

- To finish the menu display, press the PAGE BACK button twice (the first press returns you to the main menu and the second press clears it).

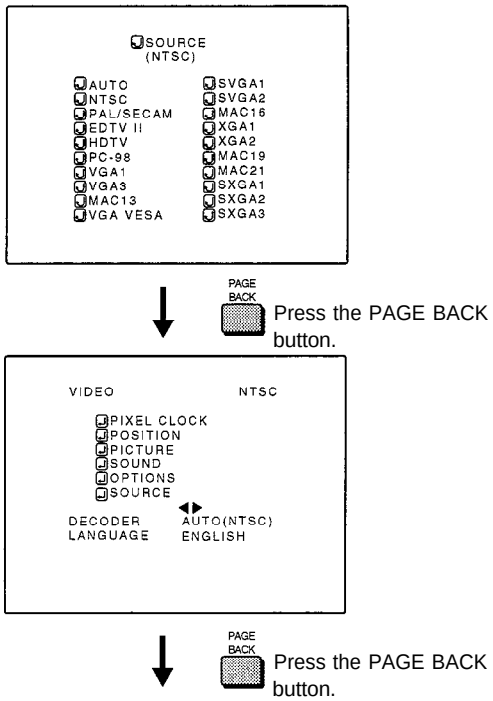

The menu display is finished.

Replacing the Light-Source Lamp

The light-source lamp has its service life. It is approximately 1000 hours.

When the light-source lamp approaches the end of its service life, its degradation progresses rapidly. When the lamp's used hours exceed 900 hours, the projector's LAMP indicator comes on. Also, at the start of projection (lamp energized), the message "REPL.-LAMP" appears on the projection screen for about two minutes. Then, replace with a new light-source lamp, or arrange for a replacement lamp. When lamp's service has reached 1000 hours, the projector's LAMP indicator starts blinking, and if you press the OPERATE button (or press the remote control's OPERATE button for more than one second), the light-source lamp does not turn on. The specified lamp replacement period is 1000 hours, but depending on use conditions, the replacement period may vary. If video image is dark and its color tint is extraordinary even after you have adjusted color tint and brightness, replace the light-source lamp a little earlier.

Purchase new light-source lamps (part No. : ET-LA995) from the Panasonic-authorized dealer where you have purchased the projector, or consult the nearest Panasonic Service center.

CAUTIONS and NOTES

- If the projector is set up in a tight place which is unsuitable for work, and if you perform replacement work there, this could hurt you. Move the projector to a place wide enough for work, and then replace the lamp.
- Use a genuine product for the light-source lamp. If you use other than a genuine product, this could cause a malfunction. Also, never use an old light-source lamp. An old lamp could cause marked degradation in performance or explode itself, possibly causing the projector to malfunction. Also, its broken pieces could come out of the projector and harm you when replacing the light-source lamp.
- Do not replace the light-source lamp immediately after the projector has been used. The temperature of the light-source lamp is still high and could cause a burn. Be sure to allow a cooling period of one hour or more before performing replacement work.
- Before starting lamp replacement work, turn off the MAIN POWER switch (see page 28), and disconnect the power cord from the wall outlet. If you perform the replacement work with the power cord left connected, this could cause harm or electric shock.
- Never discard an old light-source lamp (used lamp), as is. Otherwise, this could involve a great danger. The lamp contains a xenon gas inside, which is applying a high pressure. If the gas is not removed, it could cause the lamp to explode.
  For handling used lamps, refer to the manual supplied with the new replacement lamp you have purchased.

1 Remove the lamp-replacement opening cover by loosening screws.

Loosen the two screws with a flat-end screwdriver.

Note

- The screws are fitted so that they do not come off the lamp-replacement opening cover.

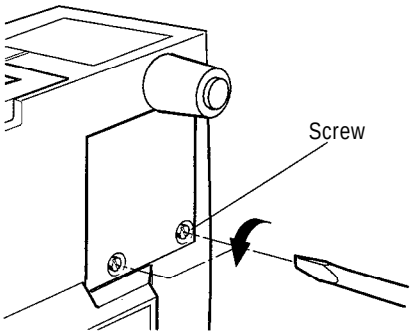

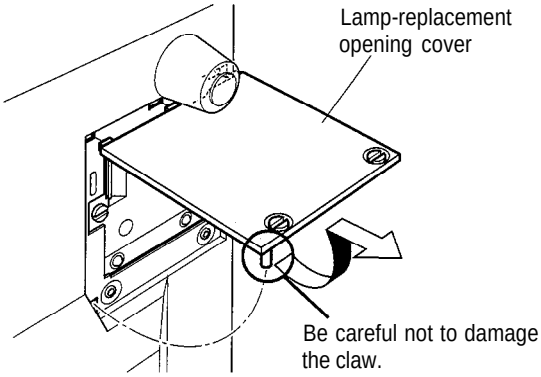

2 Loosen the lamp-unit screws, raise the handle, and pull out the lamp unit.

Loosen the two screws with a flat-end screwdriver.

Note

- The screws are fitted so that they do not come off the lamp-unit.

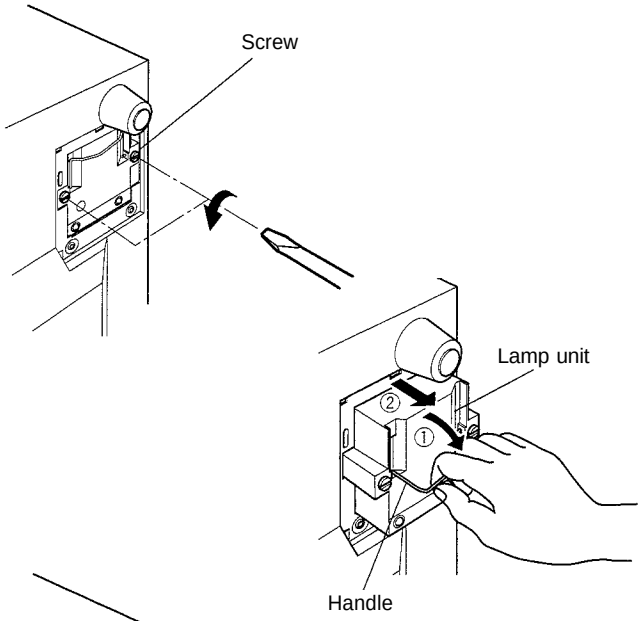

3 Insert the new lamp unit fully inside and fasten the screws.

Fasten the two screws with a flat-end screwdriver.

CAUTION

- **Do not touch the glass surface of the light-source lamp directly with your hand as well as staining it. If you touch with a bare hand, stains on your hand may adhere to the lamp, possibly preventing the lamp from performing as specified due to a shortened lamp life, a darkened screen, etc. To handle a new light-source lamp, hold its plastic part. Never touch the metal part or the front glass surface.**

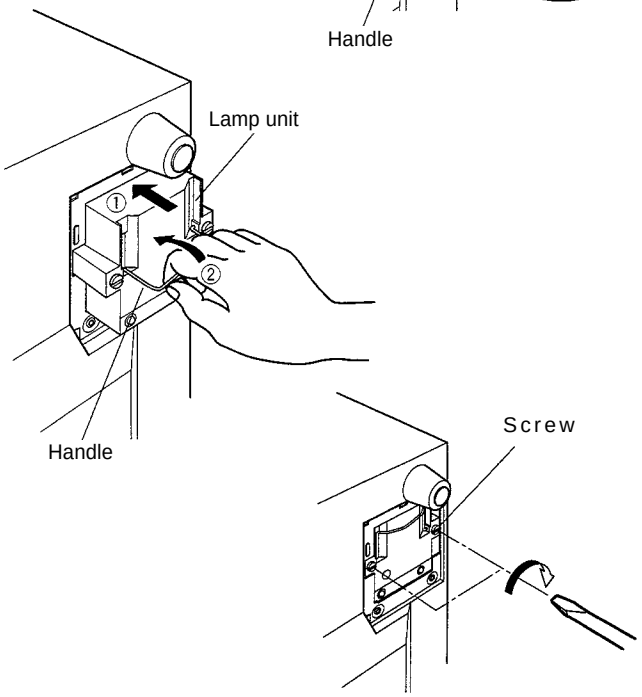

4 Replace the lamp-replacement opening cover and fasten the screws.

Fasten the two screws with a flat-end screwdriver.

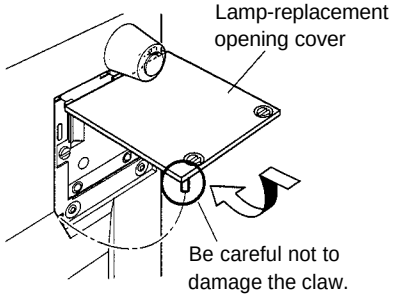

CAUTIONS

- **Install the lamp unit and close the lamp-replacement opening cover correctly; otherwise, a safety switch is activated to prevent the projector from operating.**
- **If the claw on the lamp-replacement opening cover is damaged, the projector may not possibly operate. Then, replace with a new lamp-replacement opening cover.**
- **After replacing the lamp, be sure to reset the lamp use time (see page 52).**

Resetting the Lamp Use Time

After replacing with a new light-source lamp, reset the counter inside the projector. This works to reset the life calculation of the light-source lamp, allowing the used time of the new light-source lamp to be accumulated.

■Projector's button

[MAIN POWER switch]

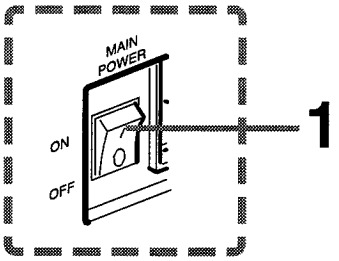

[Control panel]

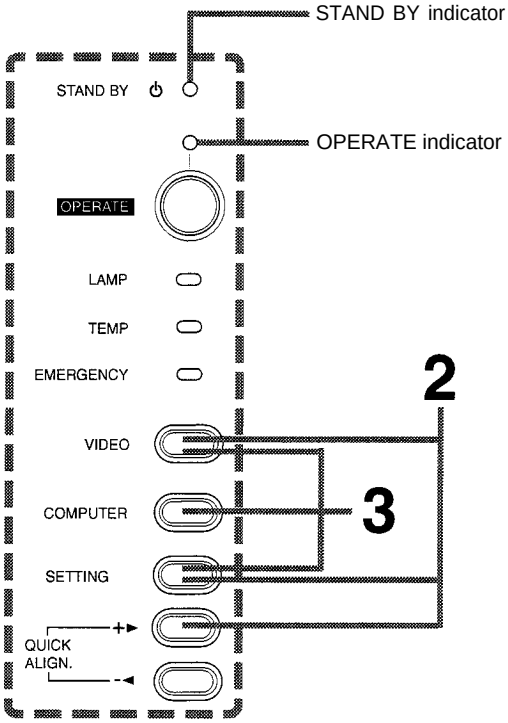

1 Turn on the MAIN POWER switch to go into stand-by mode.

- **ON [I]**: The main power turns ON and the STAND BY indicator lights.

2 Press and hold down the "VIDEO", "SETTING" and "QUICK ALIGN. + ►" at the same time for six seconds or more.

- The STAND BY and OPERATE indicators come on at the same time.

3 While the STAND BY and OPERATE indicators are on, press the "VIDEO", "SETTING", and "COMPUTER" buttons at the same time.

- The STAND BY and OPERATE indicators blink two seconds alternately, and after blinking, the projector returns to stand-by state (the STAND BY indicator lights).

*** This completes the resetting of the lamp use time.**

Memo

To check the lamp use time has been reset :

You can check it by LAMP TIME on the OPTIONS menu.

CAUTIONS

- **After replacing with a new light-source lamp, be sure to reset the lamp use time. When the lamp use time indicates 1000 hours, and if it is not reset, the projector does not operate. (The light-source lamp does not turn on.)**
- **Reset the lamp use time only when you have replaced with a new light-source lamp. Never reset it at a halfway time. Otherwise, the replacement time may become unclear, degrade performance markedly, or cause lamp explosion.**

Cleaning and Replacing the Filter

Clean the filter periodically. If the filter is heavily stained and does not get clean, or if it is damaged, replace the filter with a new filter. Otherwise, dirt may get inside and appear on the screen, possibly preventing you from enjoying the video image fully. If dirt gets inside or if you need information about the filter, consult a Panasonic-authorized dealer where you have purchased the projector or nearest Panasonic Service center.

1 Turn off the MAIN POWER switch.

After the projector goes into stand-by state with the STAND BY indicator on, turn off the main power switch and pull out the power cord from the projector and the wall outlet.

2 Remove the filter.

Loosen the screw with a flat-end screwdriver.

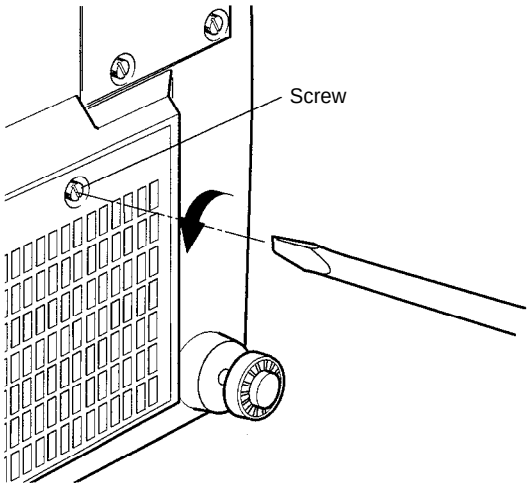

Notes

- The screws are fitted so that they do not come off the filter.
- If the filter is clogged with dirt, etc., the projector goes into an emergency mode (the EMERGENCY indicator blinks).
  So, clean the filter periodically. For the emergency mode, refer to pages 11 and 27.

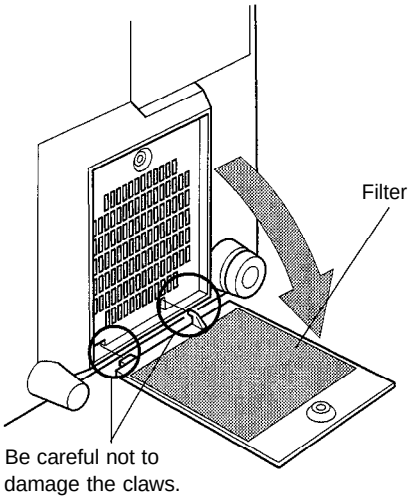

3 Clean the filter.

Clean the filter with a neutral detergent, wash it in water, and then dry it in the shade.

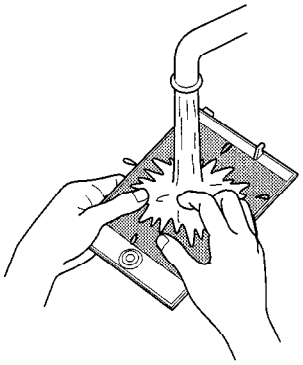

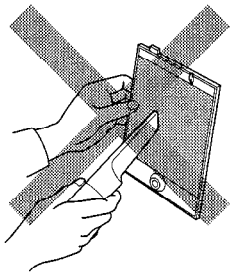

CAUTIONS

- **Put on rubber gloves when using neutral detergent.**
- **After you have washed the filter in water, make sure the filter is completely dry before reinstalling it. Otherwise, electric shock or malfunction could occur.**
- **Do not clean the filter using a vacuum cleaner. Since the filter is soft, it may be sucked into the vacuum cleaner or damaged.**

4 Reinstall the filter.

Fasten the screw with a flat-end screwdriver.

Notes

- Install the filter correctly. Otherwise, the projector does not operate. (Goes into an emergency mode.)
- If the filter's claws are damaged, the projector may not operate. Then, replace with a new filter.

Troubleshooting

Solutions to common problems related to your projector are described here. If none of the solutions presented here solves the problem, unplug the projector and consult a Panasonic-authorized dealer or service center.

Symptom	Probable cause	Corrective action	Page
Power is not supplied.	• Is the power cord disconnected?	• Insert the power cord (plug) firmly.	26
	• Is the main power switch turned on?	• Turn on the MAIN POWER switch.	28
	• Is the lamp-replacement opening cover closed correctly?	• Turn off the MAIN POWER switch, close the lamp-replacement opening cover, and turn on the main power switch again.	28, 50
	• Is the air filter closed correctly?	• Turn off the MAIN POWER switch, fit the air filter correctly, and turn on the main power switch again.	28, 53
	• Has the lamp life expired? (Has the lamp use time reached 1000 hours?)	• Turn off the MAIN POWER switch, replace with a new light-source lamp, and turn on the MAIN POWER switch. Reset the lamp use time after replacing with a new lamp.	28, 50, 52
Light is not emitted, or light level is low.	• Is the lens cap removed?	• Remove the lens cap.	26
	• Is the lamp life near its end?	• Check the lamp use time on the menu, and if the lamp life is near its end, arrange for a replacement lamp, or replace a little earlier.	45
With power on, operation starts but stops in a few minutes.	• Is the air intake or exhaust area blocked?	• Turn off the MAIN POWER switch, remove any blocking objects. and turn on the MAIN POWER switch again.	8, 10 17, 28
Video image does not appear, or audio sound does not occur.	• Is the correct input selected?	• Select the correct inputs with the VIDEO and COMPUTER buttons.	29
	• Are connected devices connected correctly?	• Connect connected devices correctly.	21
	• Are signals being supplied from the connected devices?	• Set connected devices correctly.	—
	• Are input signals (scanning frequency, etc.) appropriate?	• Check if the signal is correct as input (scanning frequency, etc.). Input the appropriate signal.	21
	• Is the source setting correctly selected? Is a wrong source (forced mode) selected?	• Set the source setting to AUTO or to the correct dedicated source (forced mode).	48, 49
	• Is brightness adjusted correctly?	• Adjust brightness on the menu.	41
	• Is volume set at minimum?	• Adjust volume with the remote control's VOL. (+/-) buttons.	30
	• Are video and audio turned off by pressing the remote control's AV MUTING button?	• Press the remote control's AV MUTING button to turn video and audio on.	31
Video image dims.	• Is focus adjusted correctly?	• Adjust focus with the remote control's FOCUS (+/-) buttons.	30, 33
	• Is distance too short or too long?	• Set the projector at the correct distance.	18, 19
	• Are TRACKING and PHASE adjusted correctly?	• Adjust TRACKING and PHASE on the menu.	33, 39
Color is poor or unstable.	• Is picture quality (color density, etc.) adjusted correctly?	• Adjust picture quality on the menu.	41
	• Is the correct broadcast system (color system) selected?	• Set the broadcast system (color system) to AUTO.	37
	• Are signals (scanning frequency, etc.) to connected devices appropriate?	• Check if the signal is appropriate (scanning frequency, etc.), and input the appropriate signal.	21
	• Is the source setting correctly selected? Is a wrong source (forced mode) selected?	• Set the source setting to AUTO. If the problem still persists, set it to the correct dedicated source (forced mode).	48

Symptom	Probable cause	Corrective action	Page
The upper part of the video image bows or distorts.	• While computer system signal is input, isn't a sync signal for composite sync (Cs) or G on sync being input?	• Input separate sync signals for vertical sync (V) and horizontal sync (H) signals.	14
	• Isn't signal with much jitter or skew distortion being input to a video deck?	• Input signals with little jitter or distortion.	—
	• Is the source setting correctly selected? Is a wrong source (forced mode) selected?	• Set the source setting to AUTO. If the problem still persists, set it to the correct dedicated source (forced mode).	48
Video image and audio sound suddenly go out.	• Are video picture and audio turned off by pressing the AV MUTING button on the remote control unit?	• Turn on video picture and audio by pressing the remote control's AV MUTING.	31
Remote control unit does not work.	• Are batteries installed correctly?	• Match the polarities of batteries correctly (+ to + and - to -).	16
	• Are batteries exhausted?	• Replace with new batteries.	16
	• Is there a shielding object between the remote control unit and the remote sensor?	• Remove any shielding objects.	20
	• Is the distance too long?	• Use the remote control unit at a nearer point.	20

* This projector is equipped with a microcomputer that may operate abnormally due to interference from external components. If this happens, turn off the main power and disconnect the power cord from the wall AC outlet. Then reconnect the power cord to AC outlet and turn on the main power again.
(For the turning on and off the power, see pages 27 to 28.)

Maintenance

- **Stains on the cabinet**
  Should be wiped off with a soft cloth. If the cabinet is heavily stained, wipe it with a cloth soaked in water-diluted neutral detergent and wrung well, then wipe clean with a dry cloth.
- **Since the cabinet may deteriorate in quality, become damaged or get its paint peeled off, be careful about the following:**
  – Do not wipe it with a hard cloth.
  – Do not wipe it forcefully.
  – Do not wipe it with thinner or benzene.
  – Do not apply any volatile substance such as insecticides to it.
  – Do not allow any rubber or vinyl article to remain in contact with it for a long time.
- **Stains on the lens**
  Should be cleaned off with commercially available blowers or lens cleaning paper (for cleaning glasses and cameras).
  Do not use liquid cleaning agents. This could cause the surface coating to be removed.
  Do not rub or hit the lens as its surface is prone to damage.

Specifications

Opto-mechanical system

• Projection method	3D-ILA device, 1 lens, 3 primary color optical shutter method
• D-ILA device	0.9” (approx. 2.3cm) measured diagonally (1365 x 1024 pixels) x 3 (Total number of pixels : 4,193,280)
• Projecting lens	Electric-driven zoom of 1.5 x
• Screen size	42” (approx. 107cm) to 300” (approx. 762cm) [recommended] to 521” (approx. 1,323cm) [maximum] measured diagonally (*with aspect ratio : 4 : 3)
• Light-source lamp	400 W xenon lamp

Electrical system

• Color system	NTSC, NTSC4.43, PAL, SECAM (* Automatic switching / manual switching)
• Resolution	1365 x 1024 dots (*S-XGA full resolution, during RGB input) 1000TV lines (*Horizontal resolution, aspect ratio 4 : 3, during video input)
• Scanning frequency	Horizontal frequency : 15 kHz - 82 kHz Vertical frequency : 50 Hz - 78 Hz

Input / output

[AV IN (AV input)]

• Y/C	1 -line, mini-DIN 4 pin x 1 Y (luminance signal) : 1Vp-p, 75Ω (negative sync) C (chroma signal) : 0.286Vp-p (burst signal), 75Ω [NTSC] : 0.3Vp-p (burst signal), 75Ω [PAL]
• VIDEO	1-line, BNC x 1 Composite video signal : 1 Vp-p, 75Ω (negative sync)
• Y, PB/B-Y, PR/R-Y	1-line, BNC x 3 Component (Y,B-Y,R-Y) signals Y : 1Vp-p, 75Ω(negative sync) B-Y : 0.7Vp-p, 75Ω R-Y : 0.7Vp-p, 75Ω High-vision base band (Y,PB,PR) signals Y : 1Vp-p, 75Ω(3-value sync) PB : + 0.35Vp-p, 75Ω PR : + 0.35Vp-p, 75Ω
• AUDIO L/R (for AV IN)	1-line, RCA x 2 Audio signal : 0.5Vrms, high impedance

[COMPUTER IN (COMPUTER input)]

• COMPUTER IN-1 (PC)	1-line, D-sub 3-row 15 pin x 1 Analog RGB signal R : 0.7Vp-p, 75Ω B : 0.7Vp-p, 75Ω G : 0.7Vp-p, 75Ω G on Sync : 1Vp-p, 75Ω (negative sync) Sync signal : 1 to 5Vp-p, high impedance (positive/negative polarity) * Some connected devices may not correspond to composite sync (CS) or G on sync signal.
• AUDIO (For COMPUTER IN-1)	1-line, stereo mini-jack x 1 0.5Vrms, high impedance
• COMPUTER IN-2	1-line, BNC x 5 Analog RGB signal R : 0.7Vp-p, 75Ω B : 0.7Vp-p, 75Ω G : 0.7Vp-p, 75Ω G on sync : 1 VP-p, 75Ω (negative sync)

Horizontal sync/composite sync signal (H/Cs)
H : 1 to 5Vp-p, high impedance (positive/negative polarity)
Cs : 1 to 5Vp-p, high impedance (positive/negative polarity)
Vertical sync signal (V)
V : 1 to 5Vp-p, high impedance (positive/negative polarity)
* Some connected devices may not correspond to composite sync (Cs) or G on sync signal.

- AUDIO (For COMPUTER IN-2): 1-line, stereo mini-jack x 1; 0.5Vrms, high impedance

[COMPUTER OUT (COMPUTER output)]

- COMPUTER OUT: 1-line, D-sub 3-row 15-pin x 1

Analog RGB signal
R : 0.7Vp-p, 75Ω
B : 0.7Vp-p, 75Ω
G : 0.7Vp-p, 75Ω
G on sync : 1Vp-p, 75Ω (negative sync)
Horizontal sync/composite sync signal (H/Cs)
H : TTL level (Polarity : Same as input)
Cs : TTL level (Polarity : Same as input)
Vertical sync signal (V)
V : TTL level (Polarity : Same as input)

- AUDIO OUT: 1-line, stereo mini-jack x 1; 0 to 0.5Vrms (variable output)

[CONTROL]

- RS-232C: : 1-line, D-sub 9-pin x 1
  * RS-232C-interface specified control terminal for controlling this projector with a personal computer.
- REMOTE: : 1 -line, mini-jack x 1
  * Remote terminal for connecting an infrared remote sensor extension unit, etc.

[Other]

- Audio power output (effective): 1 W + 1 W
- Built-in speaker: 6 x 3 cm (2-$^{3}/_{8}$" x 1 -$^{1}/_{8}$") oval type x 2, impedance 8Ω

General

- Power requirements: 120 V AC, 60 Hz
- Power consumption: 8 A (7 W during stand-by)
- Allowable operation temperature: + 5°C to + 35°C (41°F to 95°F)
- Allowable relative humidity: 20% to 80% (no condensation)
- Allowable storage temperature: -10°C to +60°C (14°F to 140°F)
- Maximum outside dimensions: Approx. (W)425 x (H)246 x (D)375 mm (16-$^{3}/_{4}$" x 9-$^{3}/_{8}$" x 14-$^{7}/_{8}$") (excluding protruding parts)
- Weight: 32.56 lbs.(14.8kg)
- Accessories: (Refer to page 7.)

** Design and specifications are subject to change without notice.*
** D-ILA devices are manufactured with a very high-precision technology, allowing 99.99% of the pixels to be effective. Only 0.0 1% or less of the pixels are missing or always on.*
**For easy understanding, pictures and illustrations are shown by being emphasized, omitted or composed, and may be more or less different from actual products.*
**TRADEMARKS*
IBM ,IBM PC, and VGA are registered trademarks of International Business Machines Corporation. Macintosh is registered trademarks of Apple Computer, Inc.
VESA is a trademark of the non-profit organization Video Electronios Standard Association.
All other product names mentioned herein are used for identification purposes only and may be the trademarks or registered trademarks of their respective companies.

Outside dimensions

■ Top

Unit: inch (mm)

*1: Protrusion excluded

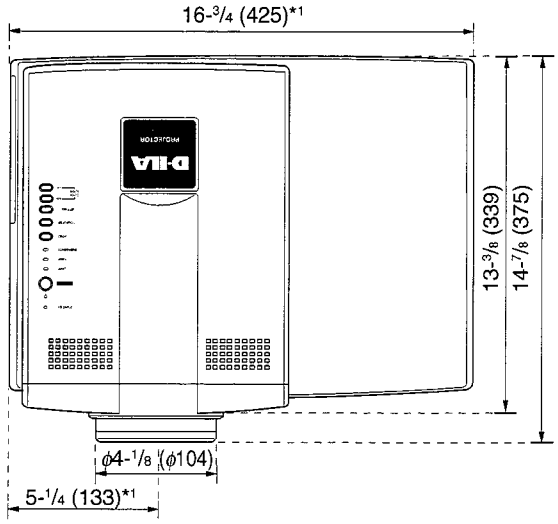

■ Front

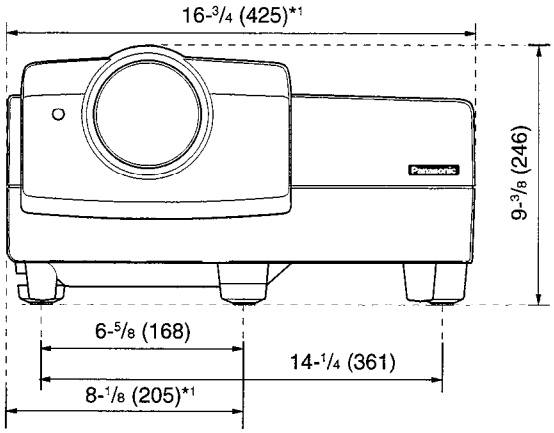

■ Side

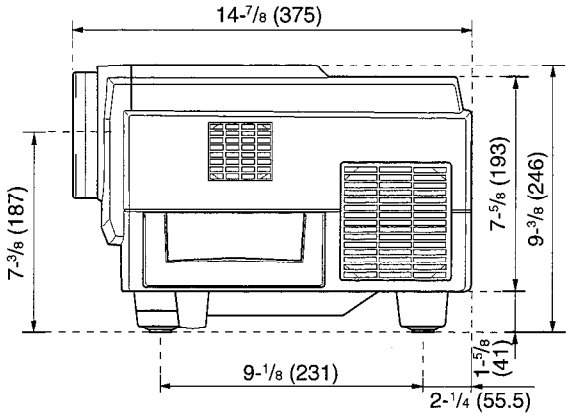

Pin assignment (Specifications for connectors/terminal)

■Y/C terminal

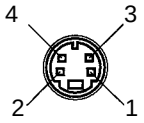

Pin number	Signal name
1	GND (Y)
2	GND (C)
3	Y
4	C

■RS-232C connector

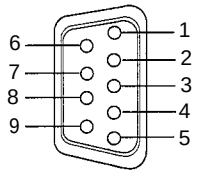

Pin number	Signal name	Pin number	Signal name
1	N/C	6	N/C
2	RD	7	N/C
3	TD	8	N/C
4	N/C	9	N/C
5	GND		

■COMPUTER IN-1 (PC) / COMPUTER OUT connector

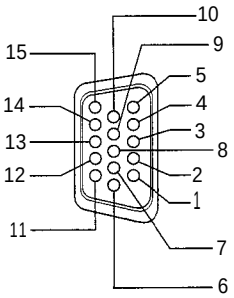

Pin number	Signal name	Pin number	Signal name
1	Red	9	N/C
2	Green	10	GND (SYNC)
3	Blue	11	GND
4	N/C	12	N/C
5	N/C	13	H.SYNC
6	GND (Red)	14	V.SYNC
7	GND (Green)	15	N/C
8	GND (Blue)		

Panasonic®

Professional/Industrial Video

Panasonic Broadcast & Television Systems Company
Division of Matsushita Electric Corporation of America

Executive Office:
One Panasonic Way (2E-6) Secaucus, New Jersey 07094

EASTERN ZONE:
610 (269) 8369
CENTRAL ZONE:
608 (846) 4778
WESTERN ZONE:
707 (584) 7189

Government Marketing Department: 52 West Gude Drive, Rockville, MD 20850 (301) 738-3840

Panasonic Canada Inc.
5770 Ambler Drive, Mississauga, Ontario L4W 2T3 (905) 624-5010

Printed in Japan
LCT0294-001B