myprojectorlamps.com

The most trusted, dependable name in projector lamp sales.

http://www.myprojectorlamps.com

http://www.myprojectorlamps.ca

http://www.myprojectorlamps.eu

The following projector manual has not been modified or altered in any way.

Panasonic®

Operating Instructions

DLP™ Based Projector Commercial Use

Model No. PT-D5700E
PT-D5700EL
PT-DW5100E
PT-DW5100EL

ENGLISH
DEUTSCH
FRANÇAIS
ESPAÑOL
ITALIANO

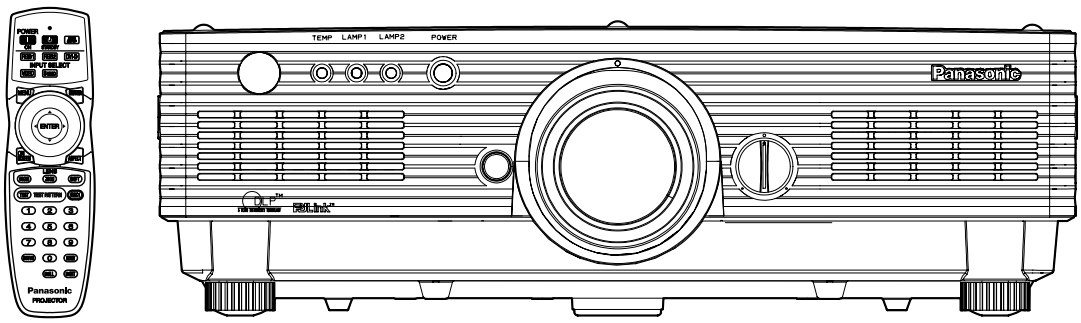

Read these instructions completely before operating this unit.

TQBJ0220-1

Dear Panasonic Customer:

This instruction booklet provides all the necessary operating information that you might require. We hope it will help you to get the most performance out of your new product, and that you will be pleased with your Panasonic DLP™ based projector.
The serial number of your product may be found on its back. You should note it in the space provided below and retain this booklet in case service is required.

Model number: **PT-D5700E/PT-D5700EL/PT-DW5100E/PT-DW5100EL**

Serial number:

IMPORTANT SAFETY NOTICE

WARNING: THIS APPARATUS MUST BE EARTHED.

WARNING: To prevent damage which may result in fire or shock hazard, do not expose this appliance to rain or moisture.

Machine Noise Information Ordinance 3. GSGV, January 18 1991: The sound pressure level at the operator position is equal or less than 70 dB (A) according to ISO 7779.

WARNING:

1) Remove the plug from the wall outlet when this unit is not in use for a prolonged period of time.
2) To prevent electric shock, do not remove cover. No user serviceable parts inside. Refer servicing to qualified service personnel.
3) Do not remove the earthing pin on the power plug. This apparatus is equipped with a three prong earthing-type power plug. This plug will only fit an earthing-type power outlet. This is a safety feature. If you are unable to insert the plug into the outlet, contact an electrician. Do not defeat the purpose of the earthing plug.

CAUTION:

To assure continued compliance, follow the attached installation instructions, which include using the shielded interface cables when connecting to a computer or peripheral device.

Pursuant to at the directive 2004/108/EC, article 9(2)
Panasonic Testing Centre
Panasonic Service Europe, a division of
Panasonic Marketing Europe GmbH
Winsbergring 15, 22525 Hamburg, F.R. Germany

IMPORTANT: THE MOULDED PLUG (U.K. only)

FOR YOUR SAFETY, PLEASE READ THE FOLLOWING TEXT CAREFULLY.

This appliance is supplied with a moulded three pin mains plug for your safety and convenience. A 13 amp fuse is fitted in this plug. Should the fuse need to be replaced, please ensure that the replacement fuse has a rating of 13 amps and that it is approved by ASTA or BSI to BS1362. Check for the ASTA mark or the BSI mark on the body of the fuse.
If the plug contains a removable fuse cover, you must ensure that it is refitted when the fuse is replaced. If you lose the fuse cover, the plug must not be used until a replacement cover is obtained. A replacement fuse cover can be purchased from an Authorized Service Centre.
If the fitted moulded plug is unsuitable for the socket outlet in your home, then the fuse should be removed and the plug cut off and disposed of safely. There is a danger of severe electrical shock if the cut off plug is inserted into any 13 amp socket.

If a new plug is to be fitted, please observe the wiring code as shown below.
If in any doubt, please consult a qualified electrician.

WARNING: –THIS APPLIANCE MUST BE EARTHED.
IMPORTANT: –The wires in this mains lead are coloured in accordance with the following code: –

Green-and-Yellow:	Earth
Blue:	Neutral
Brown:	Live

As the colours of the wire in the mains lead of this appliance may not correspond with the coloured markings identifying the terminals in your plug, proceed as follows.

The wire which is coloured GREEN-AND-YELLOW must be connected to the terminal in the plug which is marked with the letter E or by the Earth symbol ⏚ or coloured GREEN or GREEN-AND-YELLOW.

The wire which is coloured BLUE must be connected to the terminal in the plug which is marked with the letter N or coloured BLACK.

The wire which is coloured BROWN must be connected to the terminal in the plug which is marked with the letter L or coloured RED.

How to replace the fuse. Open the fuse compartment with a screwdriver and replace the fuse.

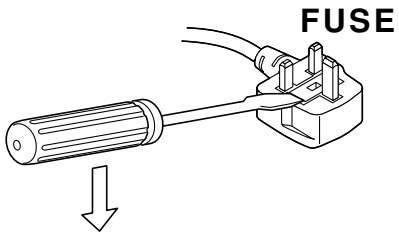

ENGLISH

Contents

IMPORTANT SAFETY NOTICE 2
Precautions with regard to safety 5
Accessories 7
Precautions on handling 8
Name and function of parts....9
Remote control 9
Front and side of the projector 11
Rear view of the main unit/Controls on rear panel 12
Side-mounted connection terminals 13
Using the remote control unit 14
Loading dry cells 14
Effective range of remote control operation 14
Setting projector ID number to remote control 15
Connect to the projector to use with a cable 15
Installation 16
Projection schemes 16
Installation geometry 16
Projection distance by projection lens 17
Calculation formulas for projection distance by lens types ..19
Connection 20
Setup precautions 20
Example of connecting with AV products 21
Example of connecting with PCs 21
Projection....22
Powering up the projector 22
Making adjustment and selection 22
Powering off the projector 23
Direct power off function....23
How to install and remove the projection lens....24
How to install the projection lens....24
How to remove the projection lens 24
How to adjust the lens 24
How to adjust the FOCUS, ZOOM and SHIFT 24
How to adjust the lens position to the left or right....25
Status function 25
Automatic adjustment (AUTO SETUP)....25
Using the SHUTTER function....25
On-screen menus....26
Structure of menu screens 26
Basic menu operations....27
Returning to the previous page 27
Menu items shown in black characters 27
Menu items setting 27
Resetting to the factory default....27
Adjusting the picture 28
PICTURE MODE....28
CONTRAST....28
BRIGHTNESS 28
COLOR....28
TINT 28
COLOR TEMP....28
WHITE GAIN 28
SYSTEM DAYLIGHT VIEW 28
SHARPNESS 29
NOISE REDUCTION....29
AI 29
SYSTEM SELECTOR 29
Adjusting the position 29
SHIFT 29
ASPECT 29
ZOOM....30
CLOCK PHASE....30
KEYSTONE....30
How to use ADVANCED MENU 30
DIGITAL CINEMA REALITY 30
BLANKING 30
INPUT RESOLUTION 31
CLAMP POSITION....31
EDGE BLENDING....31
RASTER POSITION....32
XGA MODE 32
SXGA MODE....32
Changing the display language 32
OPTION1 settings....33
COLOR MATCHING 33
Adjusting the colour matching using a colourimeter....33
COLOR CORRECTION 34
CONTRAST MODE....34
AUTO SIGNAL 34
BACK COLOR....34
STARTUP LOGO 34
SUB MEMORY LIST 34
DVI EDID....35
DVI SIGNAL LEVEL 35
FUNC1 35
OSD POSITION 35
OSD MEMORY 35
OPTION2 settings....36
PROJECTOR ID....36
INSTALLATION....36
ALTITUDE 36
DIRECTION....36
LAMP SELECT....37
LAMP RELAY....37
LAMP POWER 37
RS-232C....37
SYSTEM INFORMATION 38
AUTO POWER OFF....38
DATE AND TIME....38
PASSWORD 38
Displaying the internal test pattern 38
Cycle of displayed internal test patterns....38
Setting the network....39
Returning the network function setting back to the factory setting ..39
Connecting the PC 39
System requirements 39
Connection example....39
Using Web Browser Control 40
Accessing from Web browser....40
Password change page....40
Basic control page....41
Detail control page 42
Monitor information page....42
Error information page....43
E-mail set up page 44
Authentication server set up page....45
DNS server set up page 46
Ping test page 46
Contents of mail sent....47
Adjust clock page 47
Network config page....48
Network status page....48
Using the PJLink™ protocol 49
Supported commands 49
PJLink™ security authentication 49
Setting the security....50
PASSWORD 50
PASSWORD CHANGE 50
DISPLAY SETTING....50
TEXT CHANGE....50
CONTROL DEVICE SETUP 50
Using the serial terminals 51
Examples of connection 51
Pin assignments and signal names....51
Communication conditions 51
Basic format 51
Control commands 52
Cable specifications 52
Using the Remote 2 terminal....52
Indication of lamp monitor 53
Cleaning and replacement of air filter....54
Procedure of cleaning 54
Replacing the lamp unit....55
When to replace the Lamp unit 55
Lamp unit replacement steps 56
Ceiling Mount Bracket Safeguards....57
Before asking for service 58
Specifications....59
Compatible Signal List 61
Dimensions....62
Installation dimensions diagram 62

Precautions with regard to safety

WARNING

If you notice smoke, strange smells or noise coming from the projector, disconnect the power cord plug from the wall outlet.

- Do not continue to use the projector in such cases, otherwise fire or electric shocks could result.
- Check that no more smoke is coming out, and then contact an Authorized Service Centre for repairs.
- Do not attempt to repair the projector yourself, as this can be dangerous.

Installation work (such as ceiling suspension) should only be carried out by a qualified technician.

- If installation is not carried out correctly, there is the danger that injury or electric shocks may occur.
- Use the dedicated ceiling mount bracket specified for the model.
- Use the provided safety wire cable and take measures to prevent the projector from falling.

Do not overload the wall outlet.

- If the power supply is overloaded (for example, by using too many adapters), overheating may occur and fire may result.

Do not look into the lens while the projector is being used.

- Strong light is emitted from the projector's lens. If you look directly into this light, it can hurt and damage your eyes.
- Be especially careful not to let young children look into the lens. In addition, turn off the power and disconnect the power cord plug when you are away from the projector.

Never attempt to modify or disassemble the projector.

- High voltages can cause fire or electric shocks.
- For any inspection, adjustment and repair work, please contact an Authorized Service Centre.

Do not install this projector in a place which is not strong enough to take the full weight of the projector or on top of a surface which is unstable.

- If the projector is installed in a place which is not strong enough or on top of a surface which is sloped or unstable, it may fall down or tip over, and severe injury or damage could result.

If foreign objects or water get inside the projector, or if the projector is dropped or the cabinet is broken, disconnect the power cord plug from the wall outlet.

- Continued use of the projector in this condition may result in fire or electric shocks.
- Contact an Authorized Service Centre for repairs.

Do not place liquid containers on top of the projector.
Do not place the projector into water or let it become wet.

- If water spills onto the projector or gets inside it, fire or electric shocks could result.
- If any water gets inside the projector, contact an Authorized Service Centre.

Do not insert any foreign objects into the projector.

- Do not insert any metal objects or flammable objects into the projector or drop them onto the projector, as doing so can result in fire or electric shocks.

Use only the power cord supplied with the projector.
Do not use the supplied power cord with equipment other than the projector.

- Failure to observe this may result in electric shocks.

Insert the power cord plug securely into the wall outlet.

- If the plug is not inserted correctly, electric shocks or overheating could result.
- Do not use plugs which are damaged or wall outlets which are coming loose from the wall.

Do not do anything that might damage the power cord or the power cord plug.

- Do not damage the power cord, make any modifications to it, place it near any hot objects, bend it excessively, twist it, pull it, place heavy objects on top of it or wrap it into a bundle.
- If the power cord is used while damaged, electric shocks, short-circuits or fire may result.
- Ask an Authorized Service Centre to carry out any repairs to the power cord that might be necessary.

Clean the power cord plug regularly to prevent it from becoming covered in dust.

- If dust builds up on the power cord plug, the resulting humidity can damage the insulation, which could result in fire. Pull the power cord plug out from the wall outlet and wipe it with a dry cloth.
- If not using the projector for an extended period of time, pull the power cord plug out from the wall outlet.

Do not handle the power cord plug with wet hands.

- Failure to observe this may result in electric shocks.

Precautions with regard to safety

Do not set up the projector in humid or dusty places or in places where the projector may come into contact with oily smoke or steam.

- Using the projector under such conditions may result in fire, electric shocks or plastic deterioration. The plastic deterioration may cause the falling down of the projector which is mounted in the ceiling.

Do not place the projector on soft materials such as carpets or sponge mats.

- Doing so may cause the projector to overheat, which can cause burns, fire or damage to the projector.

During a thunderstorm, do not touch the projector or the cable.

- Electric shocks can result.

Do not place your hands or other objects close to the air outlet port.

- Heated air comes out of the air outlet port. Do not place your hands or face, or objects which cannot withstand heat close to this port [allow at least 50 cm of space], otherwise burns or damage could result.

Do not use or handle the batteries improperly.

- Failure to observe these precautions may cause the batteries to leak, overheat, explode or catch fire.
  - Do not disassemble the dry cell batteries.
  - Do not heat, or disassemble the batteries or place them into fire or liquids such as water.
  - Do not connect the + and - terminals with wire or other metallic objects.
  - Do not store batteries together with metallic objects such as necklaces or hairpins.
  - Make sure the polarities (+ and -) are correct when inserting the batteries.
  - Do not use a new battery together with an old battery or mix different types of batteries.
  - Do not use batteries with the outer covering peeling away or removed.
  - Do not use rechargeable batteries in place of the dry cell batteries.
  - The batteries have a protective outer covering. Do not remove this covering, as this may result in a short circuit.

If the battery fluid leaks, do not touch it with bare hands, and take the following measures if necessary.

- Battery fluid entering your eyes may result in loss of sight. In this case, do not rub your eyes. Rinse with clean water and seek medical advice immediately.
- Battery fluid on your skin or clothing may result in skin inflammation or injury. Rinse with clean water and seek medical advice immediately.

Remove empty batteries from the remote control at once.

- Do not leave empty batteries inside the equipment, as this may cause the batteries to leak, overheat or explode.

Before replacing the lamp, be sure to disconnect the power cord plug from the wall outlet.

- Electric shocks or explosions can result if this is not done.

When replacing the lamp, allow it to cool for at least one hour before handling it.

- The lamp cover gets very hot, and touching it can cause burns.

Do not disassemble the lamp unit.

- If the lamp section breaks, it may cause injury.

Caution

When disconnecting the power cord, hold the plug, not the cord.

- If the power cord itself is pulled, the cord will become damaged, and fire, short-circuits or serious electric shocks may result.

Always disconnect all cables before moving the projector.

- Moving the projector with cables still attached can damage the cables, which could cause fire or electric shocks to occur.

Do not place a projector or other heavy object on top of the unit.
Do not put your weight on this projector.

- Failure to observe this may cause the projector to become unbalanced and fall, which could result in damage or injury.
- The projector may be damaged or deformed.

Do not prevent heat loss.

- Doing so may cause the projector to overheat, which can cause fire or damage to the projector.
- Do not place the projector in narrow, badly ventilated places such as closets or bookshelves.
- Do not place the projector on cloth or papers, as these materials could be drawn into the air inlet port.

If the lamp has broken, ventilate the room immediately. Do not touch or bring your face close to the broken pieces.

- Failure to observe this may cause the user to absorb the gas which was released when the lamp broke and which contains nearly the same amount of mercury as fluorescent lamps, and the broken pieces may cause injury.
- If you believe that you have absorbed the gas or that the gas has got into your eyes or mouth, seek medical advice immediately.
- Ask your dealer about the replacement of the lamp unit and check the inside of the projector.

If not using the projector for an extended period of time, disconnect the power cord plug from the mains socket.

- If dust builds up on the power cord plug, the resulting humidity may damage the insulation, which could result in fire.

Disconnect the power cord plug from the wall outlet as a safety precaution before carrying out any cleaning.

- Electric shocks can result if this is not done.

Be careful not to catch your fingers between the lens and shroud when shifting the lens.

- Do not catch your fingers between the lens and shroud when shifting the lens as it may cause injury.

Ask an Authorized Service Centre to clean inside the projector at least once a year.

- If dust is left to build up inside the projector without being cleaned out, it can result in fire or problems with operation.
- It is a good idea to clean the inside of the projector before the season for humid weather arrives. Ask your nearest Authorized Service Centre to clean the projector when required. Please discuss with the Authorized Service Centre regarding cleaning costs.

If not using the projector for an extended period of time, remove the batteries from the remote control.

- Failure to do so may cause the batteries to leak, overheat, catch fire or explode, possibly resulting in fire or corruption of surrounding areas.

Do not use the old lamp unit.

- The lamp section may break.

Do not place the projector in extremely hot locations.

- Doing so may cause the outer casing or internal components to deteriorate, or result in fire.
- Take particular care in locations exposed to direct sunlight or near stoves.

ENGLISH

Accessories

Check that all of the accessories shown below have been included with your projector.

Remote control unit [N2QAYB000164 x 1]	Power cord for U.K. [K2CT3FZ00003 x 1]	Battery for remote control unit (AA) [R6DW/2ST]	Lens cover [TKKL5244-1 x 1]	Sefety cable [TTRA0146]
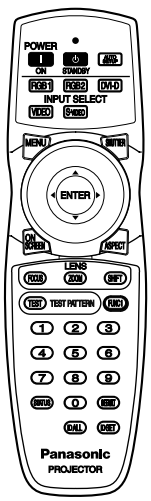	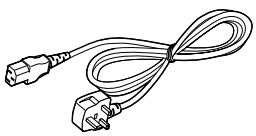 for Continental [K2CM3FZ00003 x 1] 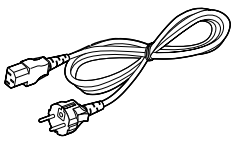	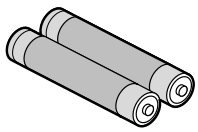	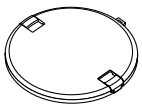	Wire cable (x 1) Wire fastening M6 (Length:10 mm) screw (x 1)

Precautions on handling

■ Precautions on transport

Make absolutely sure that the lens cap is in place when transporting the projector or carrying it around. Both the projector and the projection lens are precision-made and, as such, are susceptible to vibration and impacts. When transporting the projector and lens or carrying them around, place them in the boxes in which they were housed at the time of purchase, and take care to keep them away from vibration and impacts.

■ Precautions on installation

Be sure to observe the following precautions when installing the product.

- **Avoid installing the product in a place exposed to vibrations or impacts.**

  If the projector is installed in a place where vibrations are transmitted from a source of driving power and others or mounted in a car or a vessel, vibrations or impacts may be transmitted to the product to damage the internal parts, causing failure. Install the product in a place free from vibrations and impacts.
- **Do not move the projector while it is operating or subject it to vibration or impact.**

  The service life of its internal motors may be shortened.
- **Do not install the projector near high-voltage power lines or power sources.**

  The product may be exposed to interference if it is installed in the vicinity of high-voltage electrical power lines or power sources.
- **Do not place the projector on a vinyl sheet or carpet.**

  If a vinyl sheet sucked up and blocks the air filter intake port, the internal temperature of the projector may increase, which triggers the protection circuit, turning off the power.
- **Be sure to ask a specialized technician when installing the product to a ceiling.**

  If the product is to be installed hanging from the ceiling, purchase an optional hanging attachment (for high ceiling: Model No. ET-PKD56H) (for low ceiling: Model No. ET-PKD55S). Please call a specialized technician or contact an Authorized Service Centre for installation.
- **Install the projector so that it will be supported only by its bottom panel and by none of its other parts or surfaces.**
- **Do not place the projector over 2 700 m above sea level. When using it over 1 400 m above sea level, set the "ALTITUDE", described on page 36, to "HIGH".**

  Otherwise the life of the product may be shortened. When using it over 2 700 m above sea level, consult your dealer.
- **Lens Focus**

  Do not adjust the lens focus in the initial period (within approx. 30 minutes) after switching the projector on. The high clarity projector lens is thermally affected by the light from the light source, making the focus unstable in the period just after switching on. Please allow a warm-up time of at least 30 minutes before adjusting the lens focus. Failure to do so may cause heating focus drift.

■ Disposal

To discard the product, call the dealer or a specialized dealer.

■ Precautions on use

- **To view clear images:**
  - The audience cannot enjoy high-contrast and clear images if outside light or the illumination interferes the screen surface. Draw window curtains or blinds, turn off the lightings near the screen or take other proper measures.
  - Depending on where the projector is used, there are rare occasions when hot air from the air exhaust vents or the warm air from air conditioning can cause a shimmering effect on the screen. For this reason, take care not to shield the air exhaust vents and consider the direction of the air flowing from air conditioning.
- **Do not touch the surface of the projection lens with bare hand.**

  If fingerprints or stains are left on the projection lens surface, they are magnified and projected on the screen. Keep your hands away from the lens. Cover the lens with the supplied lens cap when the projector is not used.
- **Lamp**

  A mercury lamp with high internal pressure is used for the light source of this product. A high-pressure mercury lamp has the following characteristics:
  - It may burst with a loud sound or end its life cycle by not illuminating because of given impacts, flaws, or deterioration due to used hours.
  - The life cycle of a mercury lamp varies according to the individual difference or conditions of use. In particular, turning the power on and off frequently and/or repeatedly will greatly affect the life cycle.
  - In rare cases, it may burst shortly after the first lighting.
  - The possibility of burst increases when the lamp is used beyond the replacement time.
  - If the lamp bursts, gas inside the lamp is released and smoke may appear.
  - **Lamp deterioration accelerates when used continuously for 24 hours or more. Lamp deterioration due to continuous use can be reduced by using the "LAMP RELAY" function.**

Cleaning and maintenance

Be sure to remove the power cord plug from the receptacle before cleaning.

Use soft and dry cloth to clean the cabinet.

If stains are hard to remove, use a cloth dampened with a kitchen detergent solution (neutral) and squeezed to wipe the cabinet and finish with a dry cloth. If a chemical wipe is used, follow its instructions.

Do not clean the lens surface with fuzzy or dusty cloth.

If dust adheres to the lens, it will be magnified and projected on the screen.
Use a soft and clean cloth to wipe off dust.

Name and function of parts

Remote control

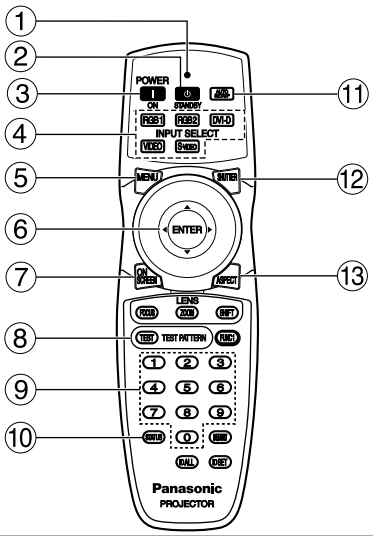

① **Remote control operation indicator lamp**
The lamp flashes when any remote control button is pressed.

② **POWER STANDBY (⏻) button (page 23)**
Switched the power to the “standby” mode if the MAIN POWER has been put to the “I” position.

③ **POWER ON (I) button (page 22)**
Turns on the power if the MAIN POWER has been put to the “I” position.

④ **Input selector (RGB1, RGB2, DVI-D, VIDEO, S-VIDEO) button**
Use to toggle through the RGB1, RGB2, DVI-D, VIDEO and S-VIDEO input ports.

⑤ **MENU button (page 27)**
Displays and clears the MAIN MENU. It can also return to the previous screen when the menu is displayed.

⑥ **Arrow ▲ ▼ ◀ ▶ buttons (page 27)**
Use these buttons to select an item on the menu screen, change setting and adjust the level.
Also use them to enter the “SECURITY” password.

ENTER button (page 27)
Press this button to enter your menu selection or to run function.

⑦ **ON SCREEN button**
This button turns on and off the on-screen indication function.

⑧ **TEST PATTERN button (page 38)**
This displays the test pattern.

⑨ **Numeric (0 - 9) buttons (pages 15, 38)**
These buttons are used for systems where more than one projector is being used.
They are used to enter ID numbers when selecting an ID, and they are also used by service personnel for entering passwords when password entry is needed.

⑩ **STATUS button (page 25)**
Press this button to display projector information. It can also be used to send information about the projector’s status via E-mail.

⑪ **AUTO SETUP button (page 25)**
Pressing this button while projecting an image automatically corrects the picture positioning on the screen. While the auto setup feature is active, a message “AUTO SETUP” appears on the screen.

⑫ **SHUTTER button (page 25)**
Press this button to black out the image temporarily.

⑬ **ASPECT button (page 29)**
Switches the image aspect ratio.

ENGLISH

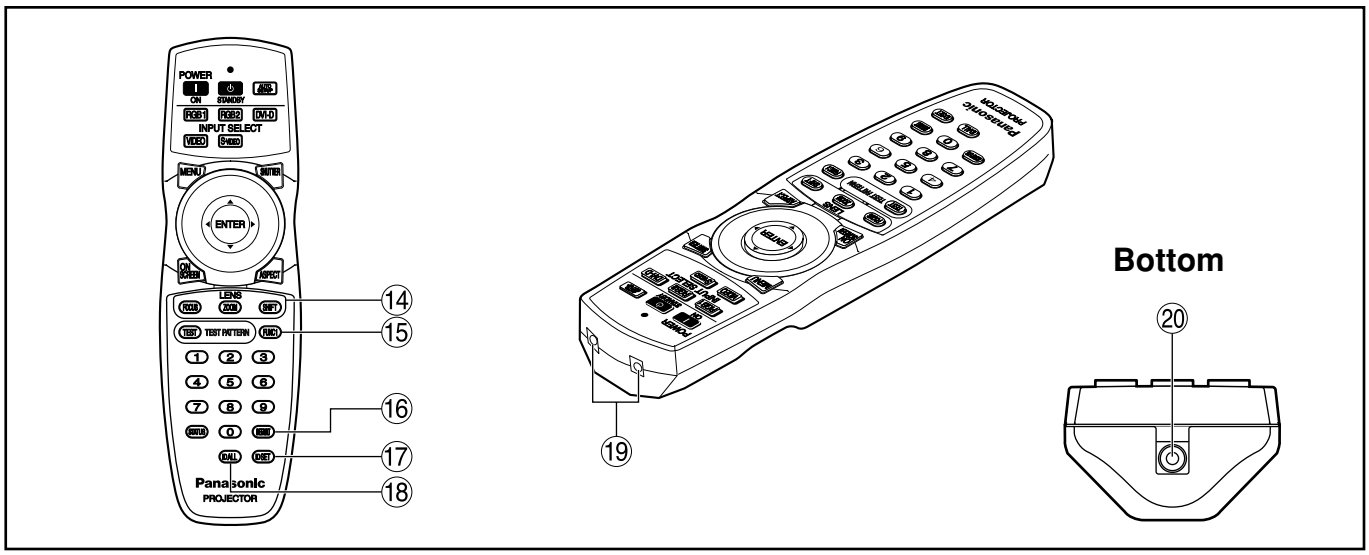

⑭ **LENS (FOCUS, ZOOM, SHIFT) buttons (page 24)**
These buttons are used to adjust the projection lens.

⑮ **Function 1 (FUNC1) button (page 35)**
This button can control the functions set in “FUNC1” of the “OPTION1” screen from the MAIN MENU.

⑯ **DEFAULT button (page 27)**
Press this button to restore the default factory setting.

⑰ **ID SET button (page 15)**
When two or more main units are used in the system, this button specifies the ID of the remote control.

⑱ **ID ALL button (page 15)**
When two or more main units are used in the system, this button switches to the mode to control them simultaneously with a single remote control.

⑲ **Remote control transmitter window**
Operate the remote control aiming at the remote control receiver window on the main unit.

⑳ **Remote control wired terminal (page 15)**
To use the wired output terminal, connect the remote control and the main unit with the M3 stereo mini jack cable available in the market.

Front and side of the projector

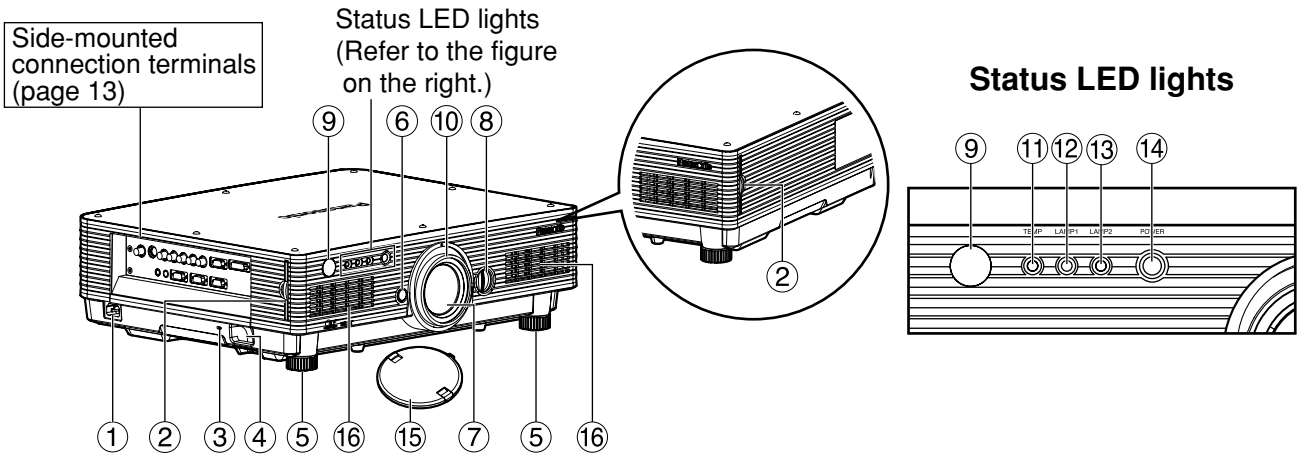

① **AC IN terminal (page 22)**
Connect the supplied line power cord into this receptacle.
Do not connect any other cable to this socket.

② **Air filter (page 54)**

③ **Security lock**
Attach a commercial burglar prevention cable (e.g., from Kensington) to this lock port. It is compatible with the Microsaver Security System from Kensington.

④ **Anti-theft hook**
Attach a chain or other fastening device available from a hardware store through this clamp.

⑤ **Level-adjusting feet (page 22)**
Use these feet to adjust the tilt of the projector. (The leveling feet at the front left and right can be adjusted.)

⑥ **Lens release button (page 24)**
Press this to remove the projection lens.

⑦ **Projection lens**
Lens for projecting images on the screen.

⑧ **Lens left/right adjusting dial (page 25)**
Turn this clockwise to move the screen to the left; conversely, turn it counterclockwise to move it to the right.

⑨ **Remote control receiver window (front) (page 14)**
This window receives the signal beam emitted from the remote control.

⑩ **Focus ring (page 24)**
For focus adjustment.
Powered focus adjustment is also available.

⑪ **Temperature monitor (TEMP) (page 53)**
Lighting or blinking of this lamp indicates an abnormal condition of the internal temperature.

⑫ **LAMP1 monitor (page 53)**
This lamp lights up when the time to replace lamp unit 1 is reached. It also blinks if something unusual occurs in the lamp circuit.

⑬ **LAMP2 monitor (page 53)**
This lamp lights up when the time to replace lamp unit 2 is reached. It also blinks if something unusual occurs in the lamp circuit.

⑭ **Power indicator (pages 22, 53)**
The lamp lights in red when the MAIN POWER switch is turned to “I” (on). It turns to green when the POWER ON button of the remote control or the main unit is pressed.

⑮ **Lens cap**
Cap the lens whenever the projector is left unused.

⑯ **Air intake vents**

Attention • Do not remove the upper cover (white or black top panel).

ENGLISH

Rear view of the main unit

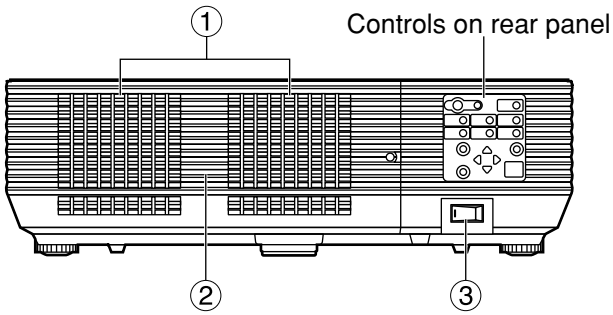

Controls on rear panel

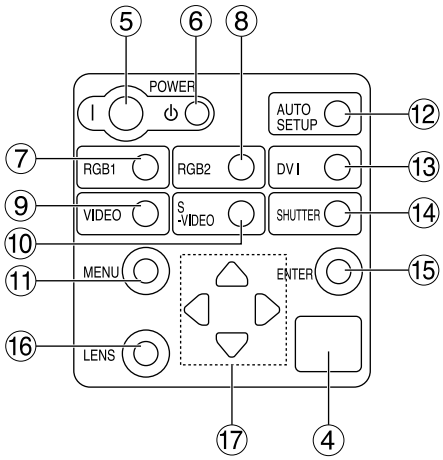

① **Air exhaust vents**

Do not place your hands or other objects close to the air outlet port.

- Heated air comes out of the air outlet port. Do not place your hands or face, or objects which cannot withstand heat close to this port [allow at least 50 cm of space], otherwise burns or damage could result.

② **Lamp unit cover**
The lamp unit is housed.

③ **MAIN POWER switch (page 22)**
Use this switch to turn on “I” and off “O” the main power applied to the projector.

④ **Remote control receiver window (rear) (page 14)**
This also receives the signal beam coming from the remote control.

⑤ **POWER ON (I) button (page 22)**
Turns on the power.

⑥ **POWER STANDBY (⏻) button (page 23)**
Switches the power to the “standby” mode.

⑦ **RGB1 button (page 22)**
Switches to RGB1 input.

⑧ **RGB2 button (page 22)**
Switches to RGB2 input.

⑨ **VIDEO button (page 22)**
Switches to video input.

⑩ **S-VIDEO button (page 22)**
Switches to S-VIDEO input.

⑪ **MENU button (page 27)**
Displays and clears the MAIN MENU. It can also return to the previous screen when the menu is displayed.
The on-screen display (OSD) selection menu can be displayed by holding down the menu key for at least three seconds.

⑫ **AUTO SETUP button (page 25)**
Pressing this button while projecting an image automatically corrects the picture positioning on the screen.

⑬ **DVI button (page 22)**
Switches to DVI-D input.

⑭ **SHUTTER button (page 25)**
Press this button to black out the image temporarily.

⑮ **ENTER button (page 27)**
Press this button to enter your menu selection or to run function.

⑯ **LENS button (page 24)**
Switches to the adjustment mode for lens focus, zoom and shift (position).

⑰ **Arrow (▲ ▼ ◀ ▶) buttons (page 27)**
Use to select an item on the menu screen, change setting and adjust the level.
Also use them to enter the “SECURITY” password.

Side-mounted connection terminals

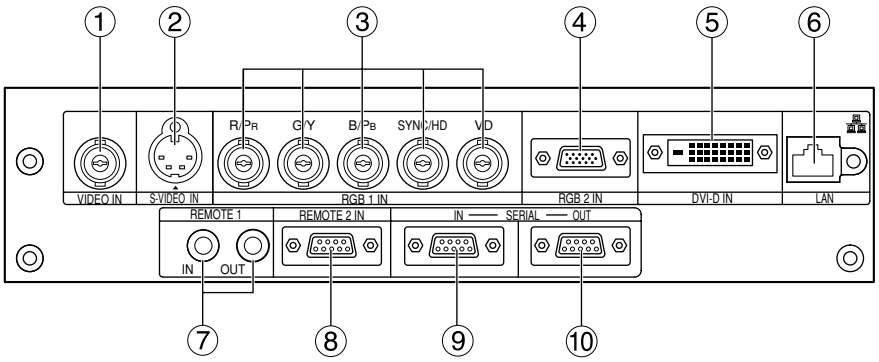

① **VIDEO IN terminal (page 21)**
An input terminal for video signals. (BNC)

② **S-VIDEO IN terminal (page 21)**
An input terminal for S-Video signals. (MIN4-pin DIN)
This terminal complies with S1 signals and automatically toggles between 16:9 and 4:3 according to the size of input signals.

③ **RGB 1 input (RGB 1 IN) terminal (page 21)**
A terminal to input RGB or YPBPR signals. (BNC)

④ **RGB 2 input (RGB 2 IN) terminal (page 21)**
A terminal to input RGB or YPBPR signals. (D-Sub 15-pin female)

⑤ **DVI-D IN terminal (page 21)**
DVI-D signals are applied to this terminal. (24-pin DVI-D connector)

⑥ **LAN terminal (page 39)**
This terminal is used to control the projector from the PC. (10BASE-T/100BASE-TX compliant)

LAN terminal (10BASE-T/100BASE-TX)
Connect LAN cable.

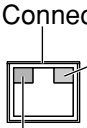

LAN 10/100 lamp (Yellow)
Lights up when 100BASE-TX connected.

LAN LINK/ACT lamp (Green)
Lights up when connected. Flashes when receiving/sending signals.

⑦ **REMOTE1 IN/OUT terminal (page 15)**
When two or more main units are used in the system, they can be connected and controlled with M3 stereo mini jack cable available in the market.

⑧ **REMOTE2 IN terminal (page 52)**
The user can remotely control the main unit by using an external control circuit to this terminal. (D-Sub 9-pin female)

⑨ **SERIAL IN terminal (pages 21, 51)**
Use the RS-232C serial terminal as an alternative interface for controlling the projector from your PC. (D-Sub 9-pin female)

⑩ **SERIAL OUT terminal (pages 21, 51)**
The signal applied to the SERIAL IN terminal appears at this terminal. (D-Sub 9-pin male)

ENGLISH

Using the remote control unit

■ Loading dry cells

When loading batteries into the battery compartment of the remote control, make sure that their polarities are correct.

1. Open battery compartment lid.

Open the lid in the order of steps ① and ②.

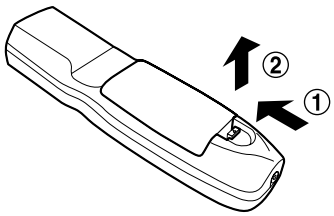

2. Insert the dry cells.

Into battery compartment, with their polarities orientated as indicated (⊕, ⊖) in the compartment.

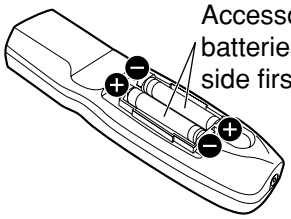

3. Close the battery compartment lid.

Replace the battery compartment lid over the compartment and slide until it clicks.

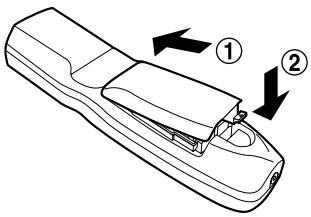

Attention
- Do not drop the remote control unit.
- Do not expose remote control unit to any liquid.
- Do not use NiCd batteries.

■ Effective range of remote control operation

The remote control should normally be aimed at either the front or rear remote control receiver window on the projector (figure 1). Otherwise, it may also be aimed at the screen, which will reflect commands back to the projector's front receiver window as illustrated in figure 2.

The effective control range is approx. 30 m from the beam receiver on the front or rear.

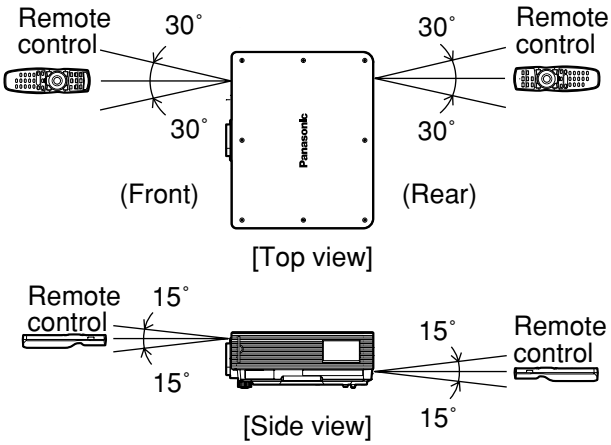

Figure 1

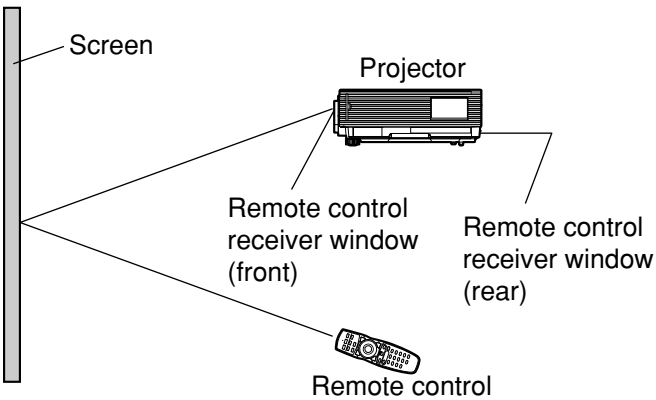

Figure 2

Note
- When the remote control is aimed at the screen, the effective control range may be reduced due to the optical loss by screen reflection.
- The remote control may not function properly if an object is in the light path.
- The remote control receiver may not function properly in intense ambient light such as fluorescent lamps. Carefully site the projector so its remote control receiver windows will not be directly exposed to intense light.

■ Setting projector ID number to remote control

Every projector has its ID number and the ID number of the controlling projector must be set to the remote control in advance so that the user can operate the remote control. **The ID number of the projector is set to "ALL" on shipping, and use the ID ALL button of the remote control when using only a single projector.**

Procedure of ID setting

Press the ID SET button, and within five seconds use the number (0 to 9) buttons to enter the 2-digit ID number set by the projector.

However, if the ID ALL button is pressed, the projector can be controlled regardless of the ID number of the projector (simultaneous control mode).

Attention
- Do not press the ID SET button accidentally or carelessly because the ID number on the remote control can be set even when no projector is around.
  If the ID SET button is pressed, the ID number goes back to the one set before pressing the ID SET button unless a numeric button is pressed within five seconds after the ID SET button is pressed.
- Your specified ID number is stored in the remote control unit unless another one is specified later. However, the stored ID will be erased if the batteries of the remote control are left exhausted. When the dry cells are replaced, set the same ID number again.

ENGLISH

■ Connect to the projector to use with a cable

When multiple main units are connected in the system, connect the units with the M3 stereo mini jack cable available in the market to simultaneously control the multiple main units with a single remote control unit through the REMOTE1 IN/OUT terminal. It is effective to use the wired remote control in the environment in which an obstacle stands in the light path or where devices are susceptible to outside light.

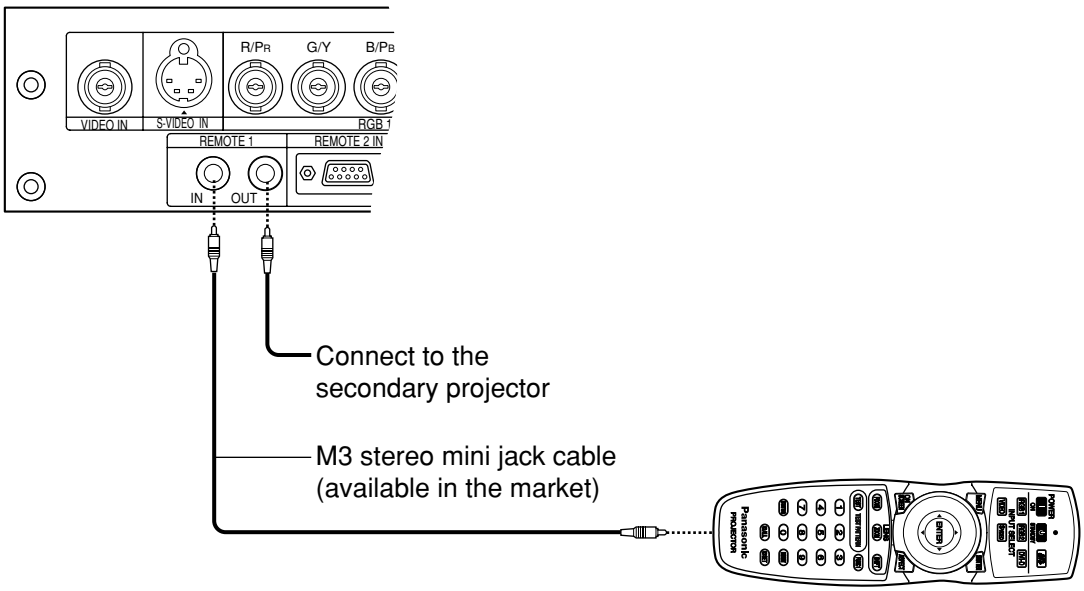

Attention
- Use two-core shielded cable of length smaller than 15 m. If the cable length exceeds 15 m, or if the shielding of the cable is inadequate, the operation may be unsatisfactory.

Installation

■Projection schemes

Any of the following four projection schemes can be used depending on user's needs or viewing conditions. Use "OPTION2" menu (chosen from the MAIN MENU) to choose the appropriate projection scheme. (page 36)

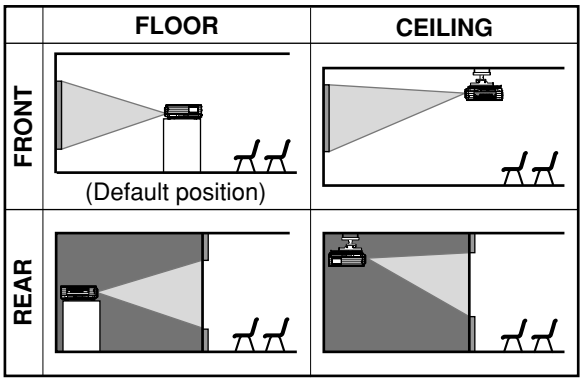

■Installation geometry

When planning the projector and screen geometry, refer to the figure below and the information on the next page for reference. After the projector is roughly positioned, picture size and vertical picture positioning can be finely adjusted with the powered zoom lens and lens tilt mechanism.

Side view

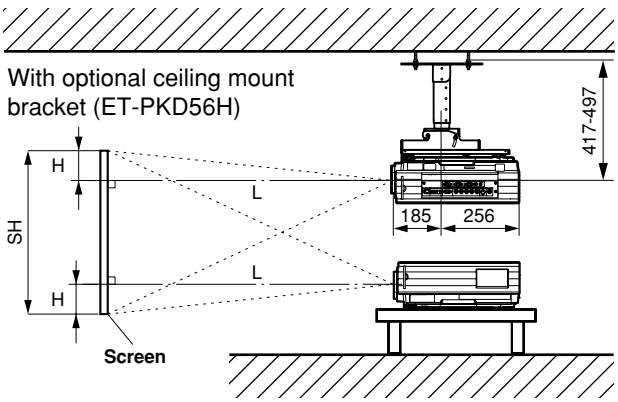

Top view

unit : mm

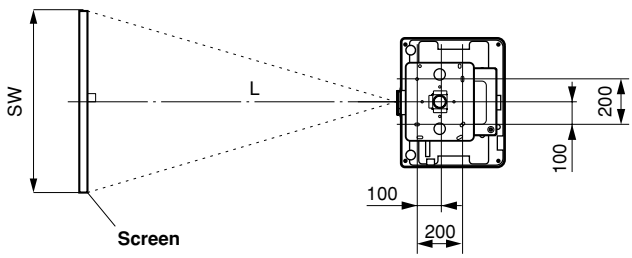

L : Projection distance
SH : Image height
SW : Image width
H : Distance from centre of lens to bottom edge of projected image.

Attention
- Do not place or use one projector on top of another projection unit.
- Leave a clearance of at least 50 cm so that the ventilation opening on the rear panel will not be blocked. (page 62)

■ Projection distance by projection lens

Listed in the table below are the lens projection distances for the PT-D5700E (lens included), PT-D5700EL (lens sold separately), PT-DW5100E (lens included) and PT-DW5100EL (lens sold separately).

• **PT-D5700E, PT-D5700EL**

Screen aspect ratio 4:3 (Unit : m SD : inch)

Lens type			Standard zoom lens		Optional lens									Height position: H*2
					Wide-angle fixed-focus lens	Wide-angle zoom lens		Intermediate-focus zoom lens		Long-focus zoom lens		Ultra-long-focus zoom lens		
Model number of projection lens					ET-DLE050	ET-DLE100		ET-DLE200		ET-DLE300		ET-DLE400		
Throw ratio*1			(1.8–2.4:1)		(0.8:1)	(1.3–1.8:1)		(2.4–4.0:1)		(3.8–6.0:1)		(5.8–8.1:1)		
Projection screen size			Projection distance (L)											
Diagonal length (SD)	Height (SH)	Width (SW)	Minimum (LW)	Maximum (LT)	(L)	Minimum (LW)	Maximum (LT)	Minimum (LW)	Maximum (LT)	Minimum (LW)	Maximum (LT)	Minimum (LW)	Maximum (LT)	
50	0.76	1.02	1.79	2.38	0.79	1.33	1.81	2.45	4.04	3.84	6.03	5.90	8.30	0 - 0.38
60	0.91	1.22	2.16	2.86	0.96	1.61	2.18	2.96	4.87	4.63	7.26	7.08	9.94	0 - 0.46
70	1.07	1.42	2.53	3.35	1.13	1.89	2.56	3.46	5.69	5.43	8.49	8.26	11.59	0 - 0.53
80	1.22	1.63	2.90	3.84	1.29	2.16	2.93	3.97	6.52	6.22	9.73	9.43	13.23	0 - 0.61
90	1.37	1.83	3.27	4.33	1.46	2.44	3.30	4.47	7.34	7.02	10.96	10.61	14.88	0 - 0.69
100	1.52	2.03	3.64	4.82	1.62	2.71	3.67	4.97	8.16	7.81	12.19	11.78	16.53	0 - 0.76
120	1.83	2.44	4.38	5.79	1.96	3.27	4.42	5.98	9.81	9.40	14.65	14.14	19.82	0 - 0.91
150	2.29	3.05	5.49	7.26	2.45	4.09	5.53	7.49	12.28	11.79	18.35	17.66	24.76	0 - 1.14
200	3.05	4.06	7.34	9.70	3.28	5.47	7.39	10.01	16.40	15.76	24.51	23.54	32.99	0 - 1.52
250	3.81	5.08	9.19	12.14	—	6.85	9.25	12.53	20.52	19.74	30.67	29.42	41.22	0 - 1.91
300	4.57	6.10	11.04	14.58	—	8.23	11.11	15.05	24.64	23.71	36.83	35.30	49.45	0 - 2.29
350	5.33	7.11	12.89	17.02	—	9.61	12.97	17.57	28.76	27.69	42.99	41.18	57.68	0 - 2.67
400	6.10	8.13	14.74	19.46	—	10.99	14.83	20.09	32.88	31.66	49.15	47.06	65.91	0 - 3.05
500	7.62	10.16	18.44	24.34	—	13.75	18.55	25.13	41.12	39.61	61.47	58.82	82.37	0 - 3.81
600	9.14	12.19	22.14	29.22	—	16.51	22.27	30.17	49.36	47.56	73.79	70.58	98.83	0 - 4.57

Screen aspect ratio 16:9 (Unit : m SD : inch)

Lens type			Standard zoom lens		Optional lens									Height position: H*2
					Wide-angle fixed-focus lens	Wide-angle zoom lens		Intermediate-focus zoom lens		Long-focus zoom lens		Ultra-long-focus zoom lens		
Model number of projection lens					ET-DLE050	ET-DLE100		ET-DLE200		ET-DLE300		ET-DLE400		
Throw ratio*1			(1.8–2.4:1)		(0.8:1)	(1.3–1.8:1)		(2.4–4.0:1)		(3.8–6.0:1)		(5.8–8.1:1)		
Projection screen size			Projection distance (L)											
Diagonal length (SD)	Height (SH)	Width (SW)	Minimum (LW)	Maximum (LT)	(L)	Minimum (LW)	Maximum (LT)	Minimum (LW)	Maximum (LT)	Minimum (LW)	Maximum (LT)	Minimum (LW)	Maximum (LT)	
50	0.62	1.11	1.95	2.60	0.87	1.46	1.98	2.68	4.41	4.19	6.58	6.43	9.03	–0.10 - 0.31
60	0.75	1.33	2.35	3.13	1.05	1.76	2.38	3.23	5.31	5.06	7.92	7.71	10.82	–0.12 - 0.37
70	0.87	1.55	2.76	3.66	1.23	2.06	2.79	3.78	6.21	5.92	9.26	8.99	12.62	–0.15 - 0.44
80	1.00	1.77	3.16	4.19	1.41	2.36	3.19	4.33	7.11	6.79	10.61	10.27	14.41	–0.17 - 0.50
90	1.12	1.99	3.56	4.72	1.59	2.66	3.60	4.88	8.01	7.66	11.95	11.55	16.20	–0.19 - 0.56
100	1.25	2.21	3.97	5.26	1.77	2.96	4.00	5.42	8.90	8.52	13.29	12.83	18.00	–0.21 - 0.62
120	1.49	2.66	4.77	6.32	2.14	3.57	4.81	6.52	10.70	10.25	15.97	15.40	21.58	–0.25 - 0.75
150	1.87	3.32	5.98	7.92	2.68	4.47	6.03	8.17	13.39	12.85	20.00	19.24	26.96	–0.31 - 0.93
200	2.49	4.43	8.00	10.58	3.58	5.97	8.05	10.91	17.88	17.18	26.71	25.64	35.93	–0.42 - 1.25
250	3.11	5.53	10.01	13.24	—	7.48	10.08	13.66	22.37	21.51	33.42	32.05	44.89	–0.52 - 1.56
300	3.74	6.64	12.03	15.90	—	8.98	12.10	16.40	26.86	25.84	40.13	38.45	53.86	–0.62 - 1.87
350	4.36	7.75	14.04	18.56	—	10.49	14.13	19.15	31.35	30.17	46.84	44.86	62.82	–0.73 - 2.18
400	4.98	8.86	16.06	21.22	—	11.99	16.15	21.89	35.84	34.50	53.55	51.26	71.79	–0.83 - 2.49
500	6.23	11.07	20.09	26.54	—	15.00	20.20	27.38	44.82	43.16	66.97	64.07	89.72	–1.04 - 3.11
600	7.47	13.28	24.12	31.86	—	18.01	24.25	32.87	53.80	51.82	80.39	76.88	107.65	–1.25 - 3.74

*1 The throw ratio is based on the value during projection onto an 80-inch screen size.

*2 Lens shift is not available when using the ET-DLE050, and so the height position (H) is SH/2.

ENGLISH

• **PT-DW5100E, PT-DW5100EL**

Screen aspect ratio 15:9 (Unit : m SD : inch)

Lens type			Standard zoom lens		Optional lens									Height position: H*2
					Wide-angle fixed-focus lens	Wide-angle zoom lens		Intermediate-focus zoom lens		Long-focus zoom lens		Ultra-long-focus zoom lens		
Model number of projection lens					ET-DLE050	ET-DLE100		ET-DLE200		ET-DLE310		ET-DLE410		
Throw ratio*1			(1.8–2.4:1)		(0.8:1)	(1.4–1.8:1)		(2.5–4.1:1)		(3.5–4.7:1)		(4.7–8.9:1)		
Projection screen size			Projection distance (L)											
Diagonal length (SD)	Height (SH)	Width (SW)	Minimum (LW)	Maximum (LT)	(L)	Minimum (LW)	Maximum (LT)	Minimum (LW)	Maximum (LT)	Minimum (LW)	Maximum (LT)	Minimum (LW)	Maximum (LT)	
50	0.65	1.09	1.95	2.59	0.86	1.45	1.97	2.67	4.40	3.82	5.02	5.08	9.62	–0.09 - 0.33
60	0.78	1.31	2.35	3.12	1.04	1.75	2.38	3.22	5.29	4.61	6.05	6.13	11.57	–0.10 - 0.39
70	0.91	1.52	2.75	3.65	1.22	2.05	2.78	3.76	6.19	5.40	7.08	7.17	13.52	–0.12 - 0.46
80	1.05	1.74	3.15	4.18	1.40	2.35	3.18	4.31	7.08	6.18	8.10	8.21	15.47	–0.14 - 0.52
90	1.18	1.96	3.55	4.71	1.58	2.65	3.59	4.86	7.98	6.97	9.13	9.26	17.42	–0.16 - 0.59
100	1.31	2.18	3.96	5.24	1.76	2.95	3.99	5.40	8.87	7.75	10.15	10.30	19.37	–0.17 - 0.65
120	1.57	2.61	4.76	6.30	2.12	3.55	4.80	6.50	10.66	9.33	12.21	12.39	23.28	–0.21 - 0.78
150	1.96	3.27	5.97	7.89	2.66	4.45	6.01	8.14	13.35	11.68	15.28	15.52	29.13	–0.26 - 0.98
200	2.61	4.36	7.98	10.54	3.56	5.95	8.03	10.87	17.82	15.61	20.41	20.74	38.88	–0.35 - 1.31
250	3.27	5.45	9.99	13.19	—	7.45	10.05	13.61	22.30	19.54	25.54	25.96	48.64	–0.44 - 1.63
300	3.92	6.53	12.00	15.84	—	8.95	12.07	16.34	26.77	23.47	30.67	31.18	58.39	–0.52 - 1.96
350	4.57	7.62	14.01	18.49	—	10.45	14.09	19.08	31.25	27.40	35.80	36.40	68.15	–0.61 - 2.29
400	5.23	8.71	16.02	21.14	—	11.95	16.11	21.81	35.72	31.33	40.93	41.62	77.90	–0.70 - 2.61
500	6.53	10.89	20.04	26.44	—	14.95	20.15	27.28	44.67	39.19	51.19	52.06	97.41	–0.87 - 3.27
600	7.84	13.07	24.06	31.74	—	17.95	24.19	32.75	53.62	47.05	61.45	62.50	116.92	–1.05 - 3.92

Screen aspect ratio 16:9 (Unit : m SD : inch)

Lens type			Standard zoom lens		Optional lens									Height position: H*2
					Wide-angle fixed-focus lens	Wide-angle zoom lens		Intermediate-focus zoom lens		Long-focus zoom lens		Ultra-long-focus zoom lens		
Model number of projection lens					ET-DLE050	ET-DLE100		ET-DLE200		ET-DLE310		ET-DLE410		
Throw ratio*1			(1.8–2.4:1)		(0.8:1)	(1.4–1.8:1)		(2.5–4.1:1)		(3.5–4.7:1)		(4.7–8.9:1)		
Projection screen size			Projection distance (L)											
Diagonal length (SD)	Height (SH)	Width (SW)	Minimum (LW)	Maximum (LT)	(L)	Minimum (LW)	Maximum (LT)	Minimum (LW)	Maximum (LT)	Minimum (LW)	Maximum (LT)	Minimum (LW)	Maximum (LT)	
50	0.62	1.11	1.98	2.63	0.88	1.48	2.01	2.71	4.47	3.89	5.11	5.17	9.78	–0.11 - 0.31
60	0.75	1.33	2.39	3.17	1.06	1.78	2.42	3.27	5.38	4.69	6.15	6.23	11.76	–0.13 - 0.37
70	0.87	1.55	2.80	3.71	1.24	2.09	2.83	3.83	6.29	5.49	7.20	7.29	13.75	–0.15 - 0.44
80	1.00	1.77	3.21	4.25	1.43	2.39	3.24	4.38	7.20	6.29	8.24	8.35	15.73	–0.17 - 0.50
90	1.12	1.99	3.62	4.79	1.61	2.70	3.65	4.94	8.11	7.08	9.28	9.41	17.71	–0.20 - 0.56
100	1.25	2.21	4.03	5.33	1.79	3.00	4.06	5.49	9.02	7.88	10.32	10.47	19.69	–0.22 - 0.62
120	1.49	2.66	4.84	6.40	2.16	3.61	4.88	6.61	10.84	9.48	12.41	12.59	23.66	–0.26 - 0.75
150	1.87	3.32	6.07	8.02	2.71	4.53	6.12	8.27	13.57	11.88	15.54	15.78	29.61	–0.33 - 0.93
200	2.49	4.43	8.12	10.72	3.62	6.05	8.17	11.05	18.12	15.87	20.75	21.08	39.52	–0.44 - 1.25
250	3.11	5.53	10.16	13.41	—	7.58	10.23	13.83	22.67	19.87	25.97	26.39	49.44	–0.55 - 1.56
300	3.74	6.64	12.21	16.11	—	9.10	12.28	16.61	27.22	23.86	31.18	31.69	59.35	–0.66 - 1.87
350	4.36	7.75	14.25	18.80	—	10.63	14.34	19.39	31.77	27.86	36.40	37.00	69.27	–0.77 - 2.18
400	4.98	8.86	16.30	21.50	—	12.15	16.39	22.17	36.32	31.85	41.61	42.30	79.18	–0.87 - 2.49
500	6.23	11.07	20.39	26.89	—	15.20	20.50	27.73	45.42	39.84	52.04	52.91	99.01	–1.09 - 3.11
600	7.47	13.28	24.48	32.28	—	18.25	24.61	33.29	54.52	47.83	62.47	63.52	118.84	–1.31 - 3.74

*1 The throw ratio is based on the value during projection onto an 80-inch screen size.
*2 Lens shift is not available when using the ET-DLE050, and so the height position (H) is SH/2.

■ Calculation formulas for projection distance by lens types

• **PT-D5700E, PT-D5700EL**

(L, LW, LT : m SD : inch)

Lens type		Aspect ratio	Projection distance (L) formula	
Standard zoom lens		4:3	Minimum (LW)	L=0.0370 x SD-0.0650
			Maximum (LT)	L=0.0488 x SD-0.0638
		16:9	Minimum (LW)	L=0.0403 x SD-0.0650
			Maximum (LT)	L=0.0532 x SD-0.0638
Wide-angle fixed-focus lens	Model No. : ET-DLE050	4:3		L=0.0166 x SD-0.0361
		16:9		L=0.0181 x SD-0.0361
Wide-angle zoom lens	Model No. : ET-DLE100	4:3	Minimum (LW)	L=0.0276 x SD-0.0452
			Maximum (LT)	L=0.0372 x SD-0.0478
		16:9	Minimum (LW)	L=0.0301 x SD-0.0452
			Maximum (LT)	L=0.0405 x SD-0.0478
Intermediate-focus zoom lens	Model No. : ET-DLE200	4:3	Minimum (LW)	L=0.0504 x SD-0.0657
			Maximum (LT)	L=0.0824 x SD-0.0758
		16:9	Minimum (LW)	L=0.0549 x SD-0.0657
			Maximum (LT)	L=0.0898 x SD-0.0758
Long-focus zoom lens	Model No. : ET-DLE300	4:3	Minimum (LW)	L=0.0795 x SD-0.1380
			Maximum (LT)	L=0.1232 x SD-0.1310
		16:9	Minimum (LW)	L=0.0866 x SD-0.1380
			Maximum (LT)	L=0.1342 x SD-0.1310
Ultra-long-focus zoom lens	Model No. : ET-DLE400	4:3	Minimum (LW)	L=0.1176 x SD+0.0244
			Maximum (LT)	L=0.1646 x SD+0.0651
		16:9	Minimum (LW)	L=0.1281 x SD+0.0244
			Maximum (LT)	L=0.1793 x SD+0.0651

• **PT-DW5100E, PT-DW5100EL**

(L, LW, LT : m SD : inch)

Lens type		Aspect ratio	Projection distance (L) formula	
Standard zoom lens		15:9	Minimum (LW)	L=0.0402 x SD-0.0650
			Maximum (LT)	L=0.0530 x SD-0.0638
		16:9	Minimum (LW)	L=0.0409 x SD-0.0650
			Maximum (LT)	L=0.0539 x SD-0.0638
Wide-angle fixed-focus lens	Model No. : ET-DLE050	15:9		L=0.0180 x SD-0.0361
		16:9		L=0.0183 x SD-0.0361
Wide-angle zoom lens	Model No. : ET-DLE100	15:9	Minimum (LW)	L=0.0300 x SD-0.0452
			Maximum (LT)	L=0.0404 x SD-0.0478
		16:9	Minimum (LW)	L=0.0305 x SD-0.0452
			Maximum (LT)	L=0.0411 x SD-0.0478
Intermediate-focus zoom lens	Model No. : ET-DLE200	15:9	Minimum (LW)	L=0.0547 x SD-0.0657
			Maximum (LT)	L=0.0895 x SD-0.0758
		16:9	Minimum (LW)	L=0.0556 x SD-0.0657
			Maximum (LT)	L=0.0910 x SD-0.0758
Long-focus zoom lens	Model No. : ET-DLE310	15:9	Minimum (LW)	L=0.0786 x SD-0.1062
			Maximum (LT)	L=0.1026 x SD-0.1056
		16:9	Minimum (LW)	L=0.0799 x SD-0.1062
			Maximum (LT)	L=0.1043 x SD-0.1056
Ultra-long-focus zoom lens	Model No. : ET-DLE410	15:9	Minimum (LW)	L=0.1044 x SD-0.1374
			Maximum (LT)	L=0.1951 x SD-0.1352
		16:9	Minimum (LW)	L=0.1061 x SD-0.1374
			Maximum (LT)	L=0.1983 x SD-0.1352

Note

- The dimensions in the table in pages 17-18 and the values obtained from the above formulas may contain slight errors.
- When an SXGA signal is input and projected, the right and left ends of the picture will be blanked and the aspect ratio will be 5:4.
- The brightness is different between the wide lens position settings and telephoto lens position settings.

ENGLISH

Connection

■Setup precautions

- Before connecting any of your video/audio equipment to the projector, carefully read the owners manual supplied with the equipment once again.
- All cable connections should be made with the entire system devices, including the projector, first turned off.
- Obtain commercial interconnecting cables for devices supplied with no accessory or optional interconnect cables.
- Video signals containing too much jitter may cause the images on the screen to randomly wobble or shake. Inserting a time base corrector (TBC) in the projector's video line will relieve this problem.
- The projector only accepts composite-video, S-Video, analogue-RGB (with TTL sync. level) and digital signal.
- Some PC models are not compatible with PT-D5700E/PT-D5700EL/PT-DW5100E/PT-DW5100EL projectors.
- When using long cables to connect various equipment to the projector, there is a possibility that the image will not be output correctly unless a compensator is used.

- The pin assignments on the S-VIDEO IN terminal are as follows:

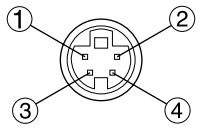

Viewed from mating side

Pin No.	Signal
①	Ground (luminance)
②	Ground (colour)
③	Luminance signal
④	Colour signal

- The pin assignments on the RGB2 input terminal are as follows:

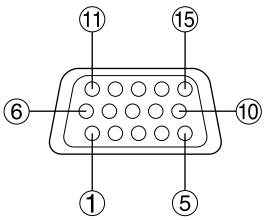

Viewed from mating side

Pin No.	Signal
①	R/PR
②	G/G · SYNC/Y
③	B/PB
⑬	HD/SYNC
⑭	VD

Pin ⑨: Not used.

Pins ④-⑧, ⑩ and ⑪ : Ground

- The pin assignments on the DVI-D input terminal are as follows (interface with DVI-D output terminal on PC):

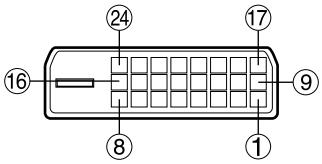

Viewed from mating side

Pin No.	Signal	Pin No.	Signal
①	T. M. D. S data 2–	⑬	——
②	T. M. D. S data 2+	⑭	+5 V
③	T. M. D. S data 2 shield	⑮	Ground
		⑯	Hot plug sense
④	——	⑰	T. M. D. S data 0–
⑤	——	⑱	T. M. D. S data 0+
⑥	DDC clock	⑲	T. M. D. S data 0 shield
⑦	DDC data		
⑧	——	⑳	——
⑨	T. M. D. S data 1–	㉑	——
⑩	T. M. D. S data 1+	㉒	T. M. D. S clock shield
⑪	T. M. D. S data 1 shield		
		㉓	T. M. D. S clock+
⑫	——	㉔	T. M. D. S clock–

- The DVI-D input terminal supports single link only.
- EDID settings may be needed depending on the DVI equipment being connected. (page 35)
- The DVI-D input terminal can be used to connect to a DVI equipment, but note that images may not appear or the projector may not work properly when connected to certain DVI equipment.
- This projector supports HDCP.

■Example of connecting with AV products

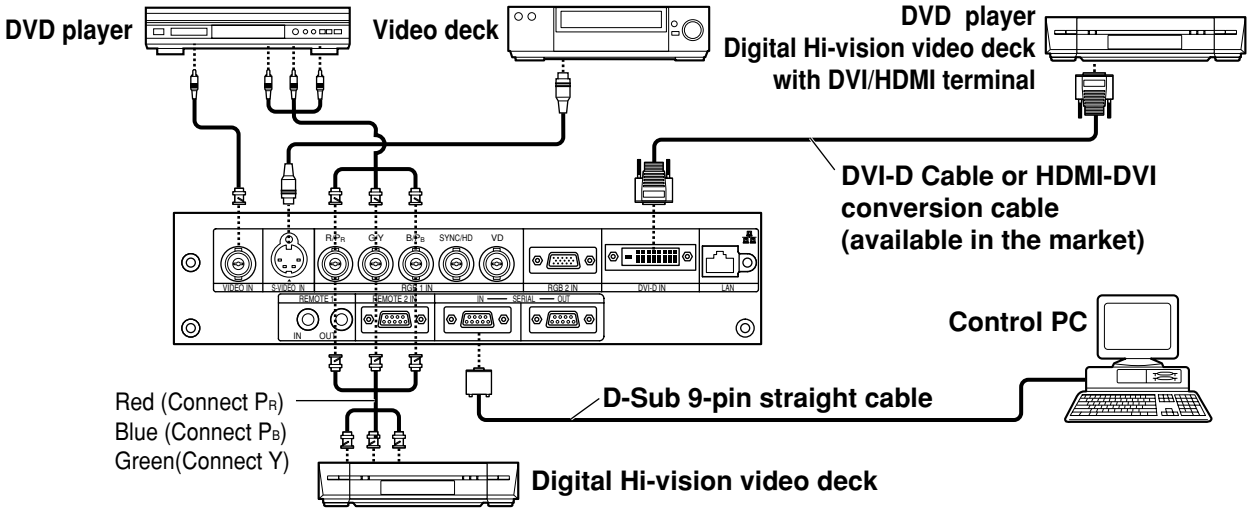

Attention
- When connecting with a video deck, be sure to use the one with a built-in time base corrector (TBC) or use a TBC between the projector and the video deck.
- If nonstandard burst signals are connected, the image may be distorted. If this is the case, connect a TBC between the projector and the video deck.
- The EDID settings may be needed depending on the equipment connected when DVI-D signals are input. (Refer to page 35.)

ENGLISH

■Example of connecting with PCs

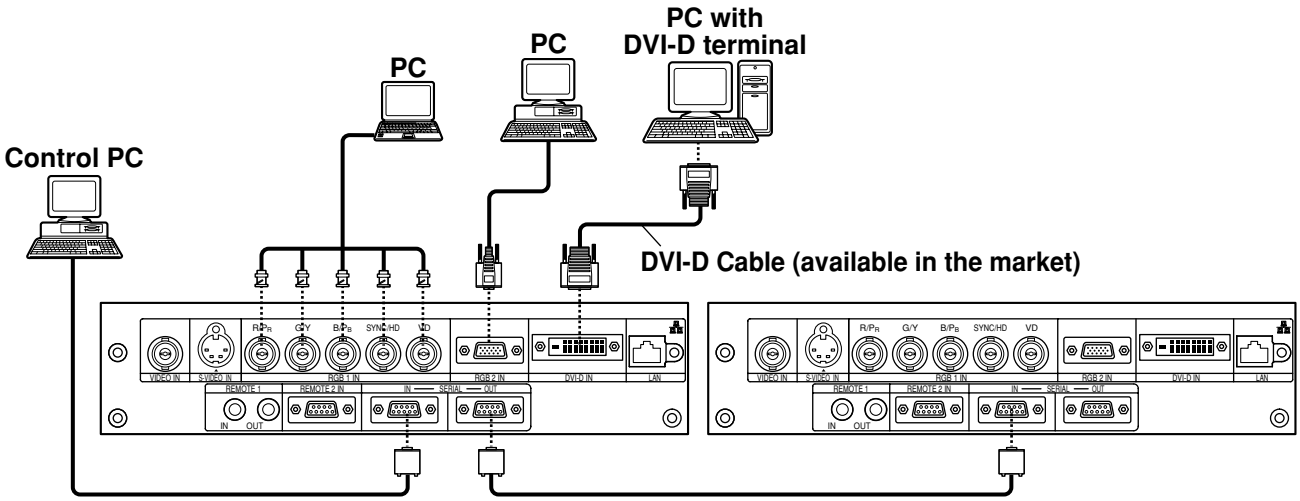

Note
- For the specifications of the RGB signals that can be applied from the PC, see the data sheet on page 61.
- If your PC has the resume feature (last memory), the computer may not function properly until the resume capability is disabled.
- When the SYNC ON GREEN signal is input, do not input sync signals to the SYNC/HD and VD terminals.
- The EDID settings may be needed depending on the equipment connected when DVI-D signals are input. (Refer to page 35.)

Projection

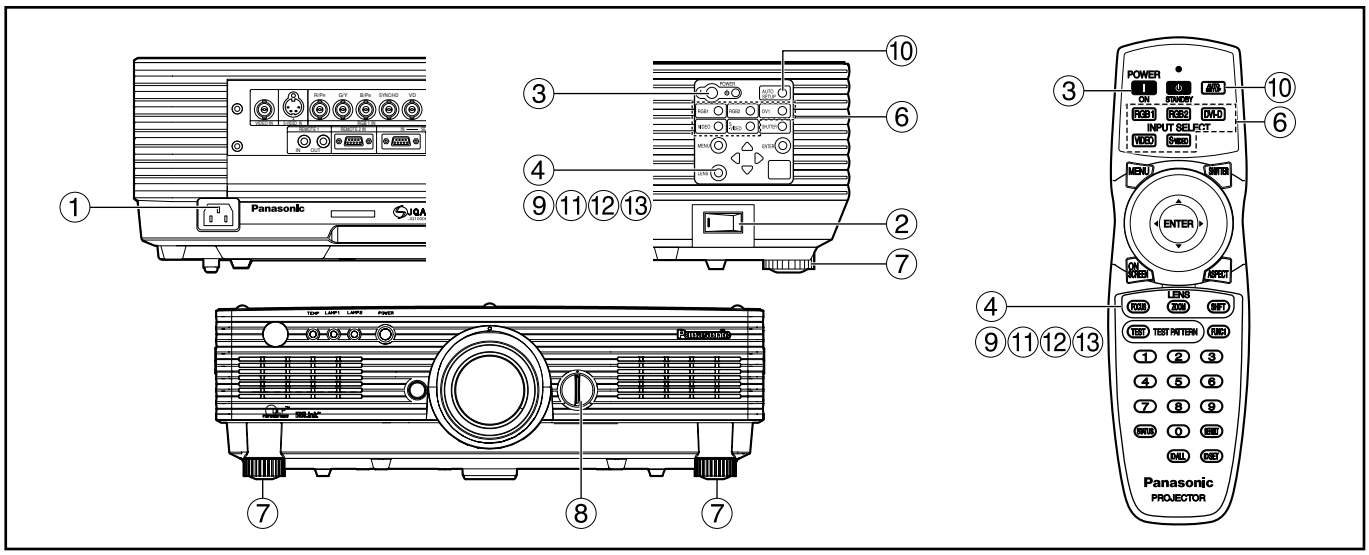

■ Powering up the projector

When using an optional lens, install a projection lens before powering up the projector. (Refer to page 24.)
Remove the lens cover beforehand.

① **Connect the supplied power cord. (220 - 240 V AC, 50 Hz/60 Hz)**

② **Press the " I " marked side of the MAIN POWER switch to turn on the power.**

The power indicator lights up red, and the projector is placed in the standby mode.

③ **Press the " I " button. [on the main unit or the remote control]**

The power indicator illuminates in green and soon the image is projected on the screen.

Note

- If the projector is powered up at about 0 ˚C, a warm-up period of approximately five minutes may be necessary to start projection.
  The temperature monitor (TEMP) lights during the warm-up period.
  When the warm-up is completed, the temperature monitor (TEMP) turns off and the image is projected on the screen.
- If the surrounding temperature is very low and the warm-up period exceeds five minutes, the control determines it as an abnormal condition and turns off the power automatically. If this happens, raise the surrounding temperature to 0 °C or higher and then turn the main power "on" and turn the power "on" (|).

■ Making adjustment and selection

It is recommended that the projector be allowed to warm up for at least 30 minutes before any adjustments are made to the focus.

<Using the remote control>

④ **Press the FOCUS button to roughly adjust the focus of the lens.***

⑤ **Set the projection scheme in "INSTALLATION" setting. (page 36)**

⑥ **Select the input signal by pressing the input selector button to toggle through RGB1, RGB2, VIDEO, S-VIDEO and DVI-D.**

⑦ **Turn the feet, and adjust the tilt of the main unit in the front and rear or left and right.**

⑧ **Use the lens left/right adjustment dial to adjust the direction of the lens. (page 25)**

⑨ **Press the SHIFT button to adjust the "SHIFT".***

⑩ **Press the AUTO SETUP button if the input signal is RGB/DVI signal. (page 25)**

⑪ **Press the ZOOM button to fit the image size to the screen size.***

⑫ **Press the FOCUS button again to adjust the "FOCUS".***

⑬ **Press the ZOOM button again to adjust the "ZOOM" and fit the image size to the screen size.***

* When operating at the projector, please refer to page 24.

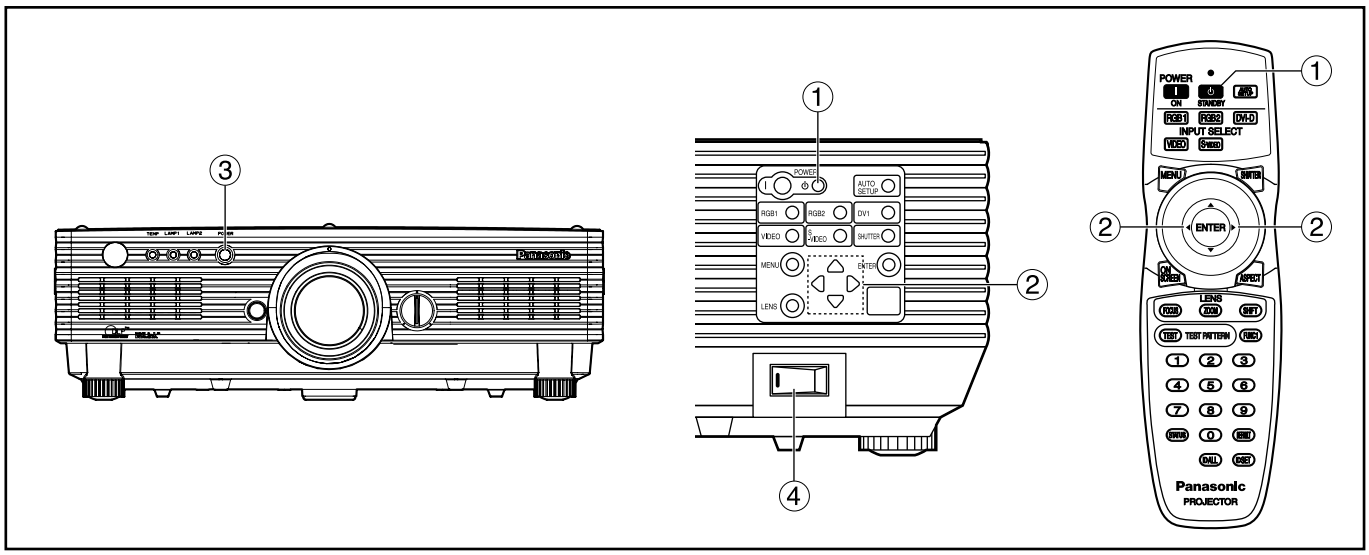

■Powering off the projector

① **Press the POWER STANDBY "⏻" button.**

② **Select "OK" with ◀ or ▶ button and press the ENTER button.**
(Or press the POWER STANDBY "⏻" button again.)

The projection of the image stops, and the power indicator of the main unit lights up orange. (The cooling fan keeps running.)

③ **Wait until the power indicator of the main unit turns to red (i.e., until the cooling fan stops).**

④ **Press the "◯" marked side of the MAIN POWER switch to remove all power from the projector.**

Attention
- **Do not turn the power supply off and then immediately back on again.**
  Turning on the power supply may not light up the light source lamp if the lamp is in the process of cooling down after turning off the power supply. To light up the lamp, turn on the power supply again when the lamp has been cooled sufficiently.
  Turning on the power supply with the lamp in the hot condition may shorten the lamp life.

Note
- The projector consumes approximately 15 watts of power even in standby mode after the cooling fan stops. (Power indicator lit in red.)
- If you re-power the projector after shutting off the main power inadvertently, the projection lamp may remain unlit. Please turn the main power on again after a while.

■Direct power off function

The power supplied internally causes the cooling fan to continue operating and cool off in the event that the power has failed or even after the power cord is accidentally disconnected immediately after the power has been turned off.

Note
- When the lamp has been cooled by the direct power off function, it sometimes takes longer than usual for the lamp to light up again.
- While the cooling fan is operating, do not place the projector inside a box or bag.

ENGLISH

How to install and remove the projection lens

■How to install the projection lens

① **Align the guide of the projection lens with the guide groove in the main unit.**

② **Turn the lens clockwise until it clicks into place.**

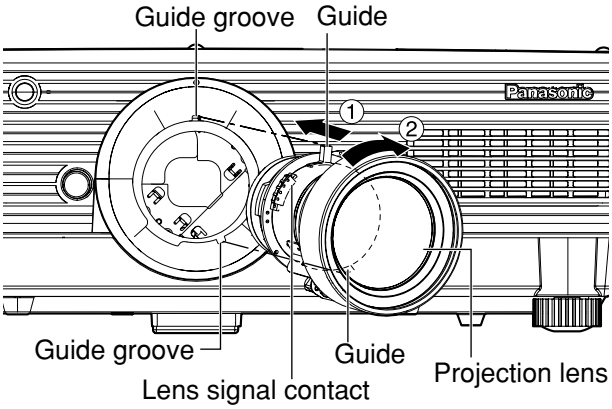

Attention • Turn the lens counterclockwise and confirm that the lens does not come off.

■How to remove the projection lens

① **Turn the lens counterclockwise as far as it will go.**

② **While holding down the lens release button, turn the lens further counterclockwise.**

③ **Remove the lens.**

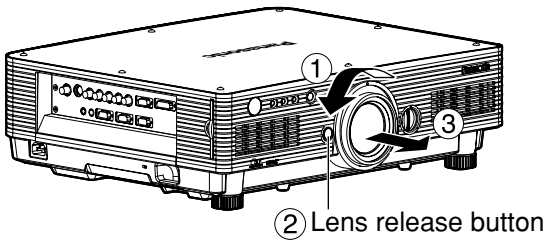

Note
- Before replacing the lens, turn off the projector's power.
- Do not touch the lens signal contact. Dust or dirt may cause defective contact.
- Do not touch the surface of the projection lens with your bare hands.
- Store the replaced lens where it will be free from vibration and impact.

How to adjust the lens

■How to adjust the FOCUS, ZOOM and SHIFT

The focus, zoom and up/down position of the images projected on the screen can be adjusted while the projector is positioned appropriately in relation to the screen.

■At the projector

① **Press LENS on the control panel on the main unit.**

Pressing the button changes the setup screen in the order of "FOCUS", "ZOOM" and "SHIFT".

② **Press ▲ ▼ ◀ ▶ to select an item and adjust it.**

■Using the remote control

① **Press LENS (FOCUS/ZOOM/SHIFT) on the remote control.**

When the FOCUS button is pressed :
The focus is adjusted.
When the ZOOM button is pressed :
The zoom is adjusted.
When the SHIFT button is pressed :
The shift is adjusted.

② **Press ▲ ▼ ◀ ▶ to select an item and adjust it.**

Caution

Be careful not to catch your fingers between the lens and shroud when shifting the lens.

Note
- When a lens without zoom functions is used, the lens zoom adjustment menu will still displayed, but no operations can be performed using the items on this menu.
- By shifting the lens up/down position, it is possible to make adjustments upward or downward from the standard position in the direction of the upper 50 % of the projected screen height. However, when using ET-DLE050 lens, the shift adjustment is not possible.
- Operations can be performed faster by holding down the ▲ ▼ ◀ ▶ buttons for about 3 or more seconds.
- Do not adjust the lens focus in the initial period (within 30 minutes) after switching on.
- A warm-up period of at least 30 minutes is recommended before using the projector.

■How to adjust the lens position to the left or right

When the lens left/right adjustment dial is turned clockwise, the screen moves toward the left; conversely, when it is turned counterclockwise, it moves toward the right. The maximum travel distance toward the left or right is about 10 % of the projection screen width.

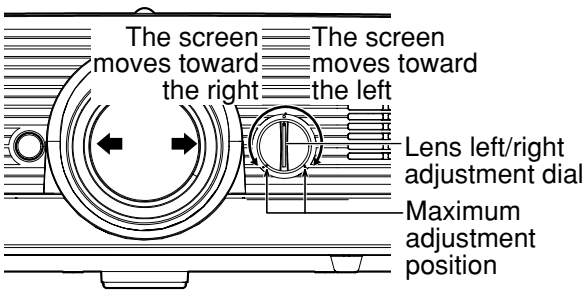

Attention • Move the lens left/right adjustment dial to any position up to the maximum adjustment position to make the adjustment. Turning the dial with undue force may cause malfunctioning.

Automatic adjustment (AUTO SETUP)

Automatic adjustment function adjust the resolution, clock phase and image position automatically when dots-structured analogue RGB signals such as computer signal are supplied. (Automatic adjustment is not available if moving picture input signals or signals having a dot clock frequency of more than 150 MHz are supplied.) When DVI signals are input, the image position is adjusted automatically.
It is recommended to supply images with a bright white frame at the outermost periphery containing characters etc. that are clear in white and black contrast when the system is in automatic adjustment mode. Avoid supplying images that involve halftones or gradation such as photographs and computer graphics.

Note
- "CLOCK PHASE" may have been shifted even when the adjustment ended normally. In this case, manually adjust the "CLOCK PHASE".
- Automatic adjustments cannot be performed when images with blurred edges or dark images are input.
  With Composite sync and G-SYNC sync signals and some types of PCs, it may not be possible to perform these automatic adjustments.
  In this case, manually adjust the items of "INPUT RESOLUTION", "CLOCK PHASE" and "SHIFT".
- Image may be disturbed for about 4 seconds during automatic adjustment, which is not an abnormal error.

ENGLISH

Status function

This shows the projector status. It can also be used to send information about the projector's status via E-mail.

① Press the STATUS button on the remote control.

STATUS

INPUT	NTSC VIDEO
	15.73kHz/59.94Hz
PROJECTOR RUNTIME	33h
LAMP1	13h/ ON/
LAMP2	13h/ ON/
INTAKE-AIR TEMP.	25 °C / 77 °F
OPTICS MODULE TEMP.	37 °C / 98 °F
TEMP. AROUND LAMP	37 °C / 98 °F
MAIN VERSION	1.00.00
NETWORK VERSION	1.00
REMOTE2	DISABLE

ENTER SEND STATUS VIA E-MAIL
MENU EXIT

Note • For details, refer to "Setting the network", "Connecting the PC" and "Using Web Browser Control" (pages 39 to 48).

Using the SHUTTER function

If the projector is not going to be used for a certain period of time such as while a meeting is on a break or preparations are being made, the mechanical shutter can be used to hide the images temporarily.

① Press the SHUTTER button of the remote control or the main unit.

The image is turned off.

② Press the SHUTTER button again.

The image comes back.

On-screen menus

■Structure of menu screens

Menus are extensively used for configuring, adjusting or reconfiguring the projector.
The menus structure is as follows:

MAIN MENU

MAIN MENU
- PICTURE
- POSITION
- ADVANCED MENU
- DISPLAY LANGUAGE
- OPTION1
- OPTION2
- TEST PATTERN
- NETWORK
- SECURITY

MENU SELECT
ENTER SUB MENU

PICTURE (page 28)

For RGB signals

PICTURE	
PICTURE MODE	GRAPHIC
CONTRAST	0
BRIGHTNESS	0
COLOR TEMP	DEFAULT
WHITE GAIN	+10
SYSTEM DAYLIGHT VIEW	OFF
SHARPNESS	+6
NOISE REDUCTION	1
AI	ON
SYSTEM SELECTOR	AUTO

MENU SELECT
CHANGE

For DVI signals

PICTURE	
PICTURE MODE	GRAPHIC
CONTRAST	0
BRIGHTNESS	0
COLOR TEMP	DEFAULT
WHITE GAIN	+10
SYSTEM DAYLIGHT VIEW	OFF
SHARPNESS	+6
NOISE REDUCTION	1
AI	ON

MENU SELECT
CHANGE

For S-Video/Video/YPBPR signals

PICTURE	
PICTURE MODE	STANDARD
CONTRAST	0
BRIGHTNESS	0
COLOR	0
TINT	0
COLOR TEMP	DEFAULT
WHITE GAIN	+6
SYSTEM DAYLIGHT VIEW	OFF
SHARPNESS	+6
NOISE REDUCTION	1
AI	ON
SYSTEM SELECTOR	AUTO

MENU SELECT
CHANGE

SECURITY (page 50)

NETWORK (page 39)

NETWORK	
HOST NAME	PROJECTOR
DHCP	OFF
IP ADDRESS	192.168. 0. 8
SUBNET MASK	255.255.255. 0
GATEWAY	192.168. 0. 1
NETWORK STATUS	
STORE	

MENU SELECT
ENTER ADJUST

TEST PATTERN (page 38)

POSITION (page 29)

POSITION	
SHIFT	
ASPECT	4:3
ZOOM	
CLOCK PHASE	+16
KEYSTONE	

MENU SELECT
ENTER SUB MENU

OPTION2 (page 36)

OPTION2	
PROJECTOR ID	ALL
INSTALLATION	FRONT-FLOOR
ALTITUDE	LOW
DIRECTION	HORIZONTAL
LAMP SELECT	DUAL
LAMP RELAY	OFF
LAMP POWER	HIGH
RS-232C	
SYSTEM INFORMATION	
AUTO POWER OFF	DISABLE
DATE AND TIME	
PASSWORD	

MENU SELECT
CHANGE

ADVANCED MENU (page 30)

ADVANCED MENU	
DIGITAL CINEMA REALITY	AUTO
BLANKING	
INPUT RESOLUTION	
CLAMP POSITION	1
EDGE BLENDING	OFF
RASTER POSITION	
XGA MODE	XGA
SXGA MODE	SXGA

MENU SELECT
CHANGE

OPTION1 (page 33)

OPTION1	
COLOR MATCHING	OFF
COLOR CORRECTION	USER
CONTRAST MODE	NORMAL
AUTO SIGNAL	OFF
BACK COLOR	BLUE
STARTUP LOGO	OFF
SUB MEMORY LIST	
DVI EDID	EDID2:PC
DVI SIGNAL LEVEL	0-255:PC
FUNC1	
OSD POSITION	1
OSD MEMORY	ON

MENU SELECT
CHANGE

DISPLAY LANGUAGE (page 32)

DISPLAY LANGUAGE
- ●ENGLISH
- DEUTSCH
- FRANÇAIS
- ESPAÑOL
- ITALIANO
- 日本語
- 中文
- РУССКИЙ
- 한국어

SELECT
ENTER SET

■ Basic menu operations

① Press the MENU button.

The MAIN MENU appears on the screen.

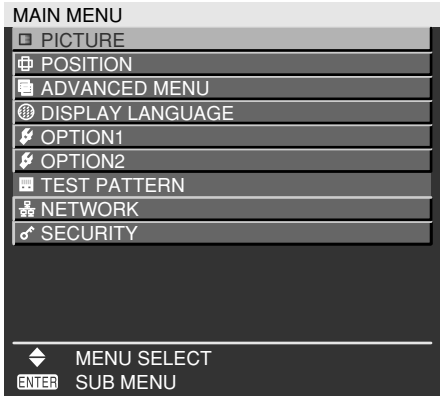

② Select (highlight) the desired item with the ▲ or ▼ button.

Selected items are displayed in yellow.

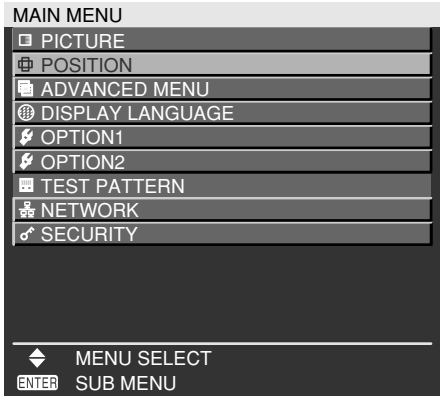

③ Press the ENTER button to enter your selection.

The submenu for the selected option will now open. (e.g. : POSITION Menu)

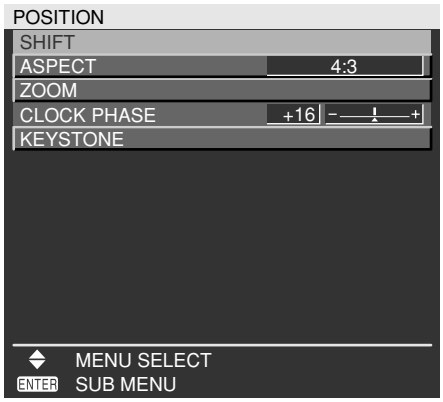

④ Highlight the desired adjustment item with the ▲ or ▼ buttons, then change the parameter value with the ◀ or ▶ buttons.

(Example of separate adjustment screen)

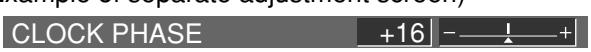

- If no button is operated for approx. 5 seconds while a bar graph is displayed, the screen will return to the previous page.

■ Returning to the previous page

- Pressing the MENU button returns the screen to the previous menu page.
- When the MAIN MENU is on the screen, pressing the MENU button clears all menus from the screen.

■ Menu items shown in black characters

- Some menu items may not be valid for certain signal formats applied to the projector.
  The menu items that cannot be adjusted or used are shown in black characters, and they cannot be selected.

■ Menu items setting

- The bottom prompt line differs on each menu depending on the selected menu option:
  - A prompt "◀ ▶ CHANGE" appears when changing the setting.
  - A prompt "◀ ▶ ADJUST " appears for a separate bar graph.

■ Resetting to the factory default

DEFAULT button is used to reset all of the projector adjustment values to the default levels which were set at the time of shipment from the factory.

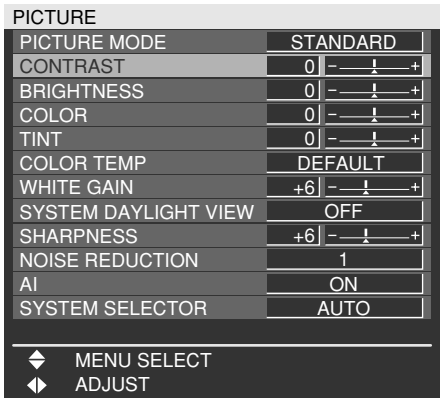

ENGLISH

Adjusting the picture

• For RGB signals

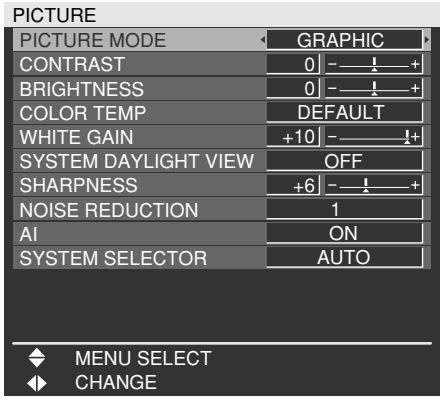

• For DVI signals

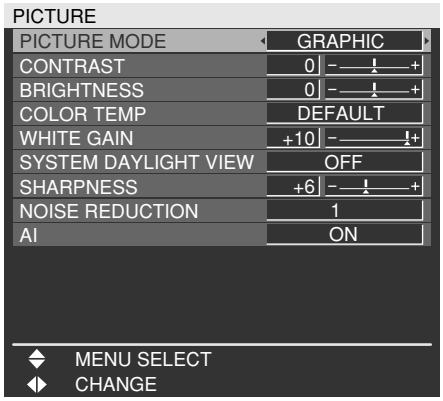

• For S-Video/Video/YPBPR signals

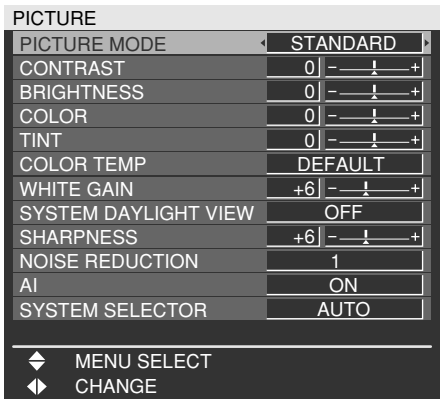

■PICTURE MODE

The picture mode can be selected from the following depending on viewing conditions and the video signal source in use:

DYNAMIC : Picture brightness/contrast ratio is increased to suit brighter viewing environments.

GRAPHIC : The picture becomes suitable for input from to the personal computer.

STANDARD : The picture becomes suitable for moving images in general.

CINEMA : The picture becomes suitable for movie sources.

NATURAL : The picture becomes suitable for use in a dark room.

■CONTRAST

"CONTRAST" is used to adjust the contrast ratio.

▶ : Raises the contrast ratio.

◀ : Lowers the contrast ratio.

■BRIGHTNESS

"BRIGHTNESS" is used to adjust the black level.

▶ : Raises the picture brightness.

◀ : Lowers the picture brightness.

■COLOR

(For S-Video/Video/YPBPR signals only)

▶ : Deepens colours.

◀ : Weakens colours.

■TINT

(For S-Video/Video/YPBPR signals only)

"TINT" is used to adjust human skin.

▶ : Adjusts skin tone toward greenish colour.

◀ : Adjusts skin tone toward reddish-purple.

■COLOR TEMP

The colour temperature is adjusted when the white areas of images take on a reddish or bluish hue.

DEFAULT : This is the standard setting.

USER : The RGB values of the white balance are set separately.
Press the ENTER button, select "WHITE BALANCE HIGH" or "WHITE BALANCE LOW", and proceed with the detailed settings.

▶ : The colours of the selected item are darkened.

◀ : The colours of the selected item are lightened.

MIDDLE : The white areas take on a slightly reddish hue.

HIGH : The white areas take on a more bluish-white hue.

■WHITE GAIN

The brightness of white parts of the image can be adjusted.

▶ : The intensity of white colour increases.

◀ : Reverts to natural image.

■SYSTEM DAYLIGHT VIEW

This adjusts the vividness of the projected images when the projector is used under bright lighting.

OFF : "SYSTEM DAYLIGHT VIEW" is disabled.

1 : Low

2 : Middle

3 : High

■SHARPNESS

"SHARPNESS" is used to adjust the crispness of the image.

▶ : Sharpens the edge of the image.

◀ : Softens the edge of the image.

■NOISE REDUCTION

In this mode, the video noise is reduced.

OFF : No correction
1 : Low
2 : Middle
3 : High

■AI

Gray scale control is exercised to suit the images, and optimal images with a clear contrast are projected.

ON : AI compensation is enabled.
OFF : AI compensation is disabled.

■SYSTEM SELECTOR

Set this according to the connected signal system.

(S-Video/Video terminal input signal)

AUTO : This is the standard setting. The received signal system is automatically identified.

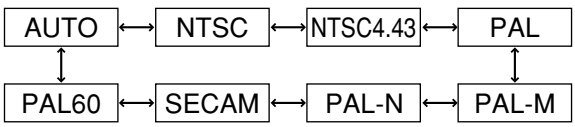

Note • When signal deterioration or other factors prevent images from being displayed correctly with the "AUTO" setting, change the setting to match the connected signal system.

(RGB1/RGB2 terminal input signals)

AUTO : This is the standard setting. The received signal system is automatically identified.

When VGA60/480p signals are input

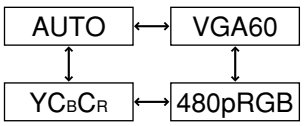

When other than VGA60/480p are input

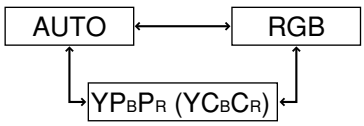

For the signals which are supported, refer to page 61.

Adjusting the position

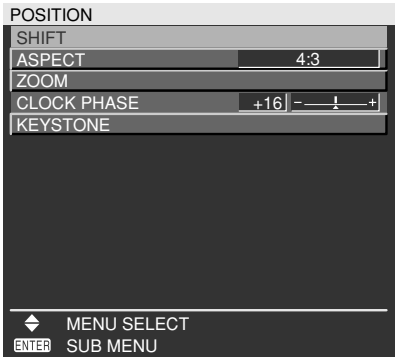

■SHIFT

The position where the images are displayed can be moved here.

◀ ▶ : The position is moved horizontally.

▲ ▼ : The position is moved vertically.

■ASPECT

AUTO : (For S-Video/Video signals only) At this setting, when S1 video signals*1 are identified as being input to the S-Video connector or video ID signals are identified as being input to the video connector, the images are displayed after automatically being converted to the 16:9 aspect ratio.

16:9 : At this setting, when standard signals*2 are input, the images are converted to the 16:9 aspect ratio and displayed. When wide-screen signals*3 are input, the images are displayed with their inherent aspect ratio intact.

4:3 : At this setting, when standard signals*2 are input, the images are displayed with their inherent aspect ratio intact. When wide-screen signals*3 are input, they are converted by the PT-D5700E/PT-D5700EL to the 4:3 aspect ratio and displayed. With the PT-DW5100E/PT-DW5100EL, the images are reduced in size and displayed without converting their aspect ratio so that they will fit onto a screen with a 4:3 aspect ratio.

S4:3 : Select this setting when using a 16:9 screen.

H FIT : Pictures are displayed using all the panel pixels in the horizontal direction. When a signal has an aspect ratio taller than that of the panel pixel*4, the image will be displayed with the top and bottom portions cut off.

V FIT : Pictures are displayed using all the panel pixels in the vertical direction. When a signal has an aspect ratio wider than that of the panel pixel*4, the image will be displayed with the left and right sides cut off.

HV FIT : The image is displayed on all the panel pixels*4. When the aspect ratio of the input signal is different from that of the panel pixel*4, the signal is transformed to the aspect ratio of the panel pixel*4 and then displayed.

*1 S1 video signals are 16:9 video signals to which is added the detection signal output from the video deck or other unit which supports the wide-screen format.
*2 Here, the standard signal means 4:3 or 5:4 input signals.
*3 Here, the wide-screen signals means 16:9, 15:9 or 15:10 input signals
*4 Panel pixel aspect ratio is 4:3 in the case of PT-D5700E/PT-D5700EL and 15:9 for PT-DW5100E/PT-DW5100EL.

Attention • If you choose an aspect ratio that does not match the source video's aspect ratio, you will see a picture with an aspect ratio not the same as that of the original picture. Choose the appropriate aspect ratio carefully to match that of the original picture.

(Continued on the next page)

ENGLISH

Adjusting the position

Note
- If the picture size is compressed or enlarged by using the 16:9 aspect ratio when the projector is used for profitable purpose or in the presence of an audience (for example, in a coffee shop or at a hotel etc.), it may infringe the rights of the copyright owner of the original picture.
- If a picture with the standard (4:3) aspect ratio is projected at a wide aspect ratio, parts of the picture may run over the screen bounds or the overall picture may be distorted. To view the picture at its original aspect ratio, choose the standard 4:3 aspect ratio.

■ZOOM

This enables the enlargement ratio to be changed and the resulting enlarged image displayed.

◀ ▶ : The enlargement ratio in the horizontal direction is changed.

▲ ▼ : The enlargement ratio in the vertical direction is changed.

■CLOCK PHASE

(For RGB/YPBPR signals only)
Clock phase adjustment allows the user to minimize visible noise with the ◀ or ▶ button.

Note
- When projecting signals whose dot clock frequency is 150 MHz or higher, the noise may not disappear even when the clock phase is adjusted.
- Clock phase adjustment is not available for digital signals.

■KEYSTONE

KEYSTONE : Keystone distortion can be corrected only along either horizontal bound of the picture.

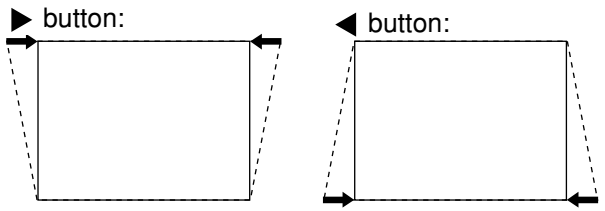

Note
- Keystone distortion can be corrected to ±30 ° of the angle of tilt for the projector. However, the greater the correction amount, the more the picture quality will deteriorate, and the harder it will become to achieve a good level of focus. To obtain the best picture quality, set up the projector and screen in such a way that the amount of keystone correction required is as minimal as possible.
- The picture size will also change when correction of keystone distortion is carried out.

LINEARITY : After you are finished with keystone adjustment, adjust vertical linearity with the ◀ or ▶ button.
Linearity is not adjustable if no correction was made to keystone distortion.

How to use ADVANCED MENU

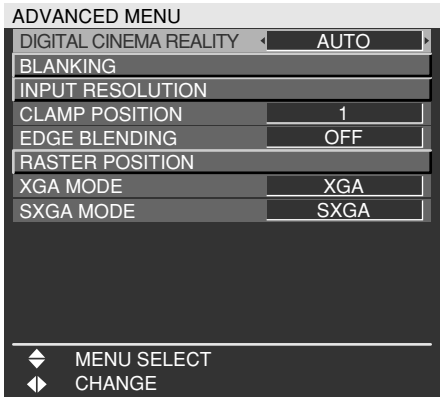

■DIGITAL CINEMA REALITY

Increase the vertical resolution when the S-Video/ Video signal input or 480i, 576i, 1080/60i or 1080/50i signal input is applied.

AUTO : Performs automatic detection and cinema processing. (factory default)

OFF : Unforced cinema processing

25p FIXED:
Forced cinema processing (2:2 pulldown) is performed when a PAL and SECAM, or 576i or 1080/50i signal is input.

30p FIXED:
Forced cinema processing (2:2 pulldown) is performed when a NTSC, 480i or 1080/60i signal is input.

Note
- In “DIGITAL CINEMA REALITY”, the image quality will be deteriorated if “30p FIXED” or “25p FIXED” is selected when the signal is not a 2:2 pulldown signal. (The vertical resolution will be deteriorated.)

■BLANKING

You can perform fine adjustments for blanking if noise appears at the ends of the screen or the image protrudes out of the screen during image projection using a video deck and so on.

▲ ▼ : Select the UPPER, LOWER, LEFT or RIGHT adjustment.

◀ ▶ : Adjust the blanking width.

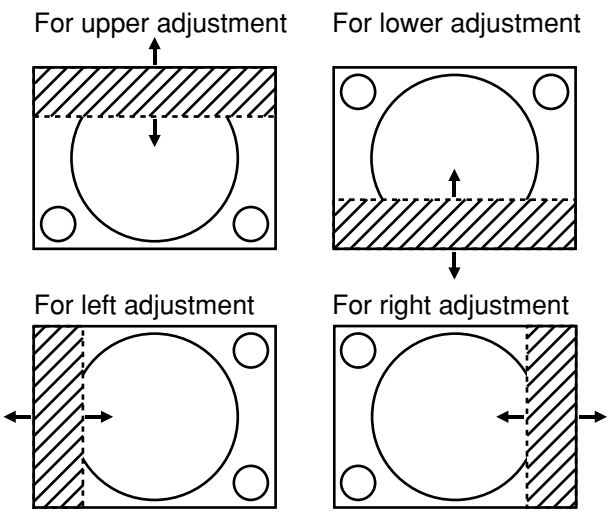

■INPUT RESOLUTION

Input resolution adjustment achieves the best image when the screen flickers or halo is observed around the contour.

▲ ▼ : These select the items listed below.

◀ ▶ : These select the value.

"TOTAL DOTS", "DISPLAY DOTS", "TOTAL LINES" and "DISPLAY LINES"

Each item automatically displays a value in response to the type of the input signal. If vertical stripes appear on the screen or the image is partly missing, increase or decrease the displayed value while observing the screen to achieve the optimal value.

Note
- The abovementioned vertical stripes will not appear on the screen when all white signals are input.
- The picture may be distorted during the adjusting operation, but this is not a fault.
- The input resolution can be adjusted only when RGB signal input is applied with RGB1 and RGB2 IN.
- Automatic adjustment is not available if signals having a dot clock frequency of more than 150 MHz are supplied.

■CLAMP POSITION

(For RGB/YPBPR signals only)

Use the clamp position adjustment to achieve the optimal value when dark areas of the image are crushed or displayed in green.

Adjust with the ◀ ▶ buttons.

The value changes from 0 to 255.

The optimal value for the clamp position adjustment
- If dark areas are crushed:
  → The optimal value is the point where the dark area is best improved.
- If the dark areas are displayed in green:
  → The optimal value is the point where the green area becomes dark and clear.

Note
- The clamp position can be adjusted only when the RGB signal input is applied with RGB1 and RGB2 IN.

■EDGE BLENDING

This projector has the function to hide the seams for multi-screens.

①Press ▲ ▼ to select "EDGE BLENDING".

②Press ◀ ▶ to switch "EDGE BLENDING".

OFF : When the multi-screens are not going to be used.
ON : When using "EDGE BLENDING" function.

③Press the ENTER button.

The "EDGE BLENDING" screen will be displayed.

④Press ▲ ▼ to specify the area to be adjusted.

- To joint the top : set "UPPER" to "ON".
- To joint the bottom : set "LOWER" to "ON".
- To joint the left : set "LEFT" to "ON".
- To joint the right : set "RIGHT" to "ON".

⑤Press the ENTER button to toggle "ON" and "OFF".

⑥Press ◀ ▶ to adjust the compensation width and start position.

<To display the adjustment Marker>

⑦Press ▲ ▼ to select "MARKER".

⑧Press the ENTER button to select "ON".

A marker for adjusting the picture position appears. The optimal point is the position where the red line of one frame overlaps the green line of the other frame. However, depending on the installation environment or the lens to be used, dot-misalignment may occur.
The correction widths of the jointed frames must be the same value all the time. The optimal joint cannot be achieved if the jointed frames have different correction widths.

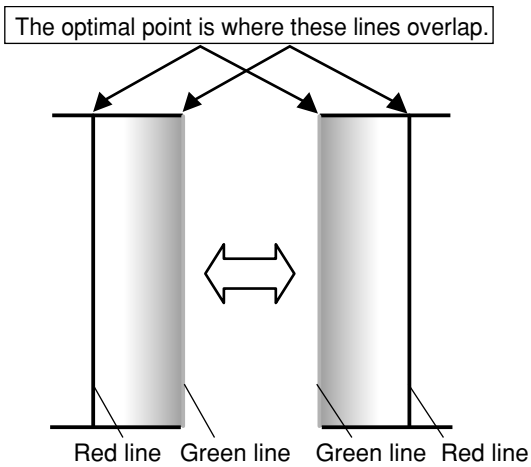

⑨Press ▲ ▼ to select "BRIGHT ADJUST".

⑩Press the ENTER button.

The "BRIGHT ADJUST" screen will be displayed.

⑪Press ▲ ▼ to select "BRIGHT INSIDE".

⑫Press the ENTER button.

The "BRIGHT INSIDE" adjustment screen will be displayed.
When "INTERLOCKED" is set to "OFF", individual adjustment of "R", "G" and "B" will be possible.

(Continued on the next page)

ENGLISH

⑬ **Press ▲ ▼ to select an item, and press ◀ ▶ to adjust the setting.**

Once adjustment is complete, press the MENU button to return to “BRIGHT ADJUST”.

⑭ **Press ▲ ▼ to select the part of “UPPER”, “LOWER”, “RIGHT”, “LEFT”.**

⑮ **Use ◀ ▶ to adjust the width for correcting the “BRIGHT INSIDE” setting (0 to 255).**

⑯ **Press ▲ ▼ to select “BRIGHT OUTSIDE”.**

⑰ **Press the ENTER button.**

The “BRIGHT OUTSIDE” adjustment screen will be displayed.
When “INTERLOCKED” is set to “OFF”, individual adjustment of “R”, “G” and “B” will be possible.

⑱ **Press ▲ ▼ to select an item, and press ◀ ▶ to adjust the setting.**

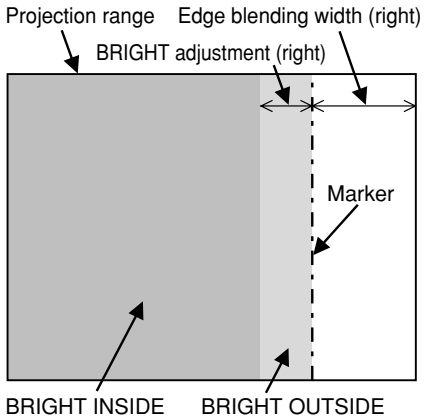

Note
- The “BRIGHT ADJUST” is a function for making the brightening of the bright level in those areas where the pictures overlap less conspicuous when multi-screens have been configured using “EDGE BLENDING”. The optimal point is where, after the “BRIGHT INSIDE” has been adjusted, the compensation amount is the same for the bright levels in the areas where the pictures overlap and where the pictures do not overlap. If, after the “BRIGHT INSIDE” adjustment, only the vicinity of the borders of the areas where the pictures overlap and where the pictures do not overlap becomes bright, proceed to adjust the top, bottom, left and right widths. Alternatively, if only the vicinity of the borders has darkened as a result of the width adjustments, proceed with the “BRIGHT OUTSIDE” adjustment.
- When a rear screen or screen with a high gain is used, the joints may appear to be discontinuous depending on the viewing position.
- When any setting other than “OFF” has been selected for “EDGE BLENDING”, the “AI” is not adjustable.

■RASTER POSITION

When the whole area where the input picture can be displayed is not used, the picture can be moved to any position inside the display area.

◀ ▶ : These adjust the value in the horizontal direction.

▲ ▼ : These adjust the value in the vertical direction.

■XGA MODE

This mode takes effect only when XGA (RGB) signals are input.

XGA : This is the standard setting.
WXGA : Select this mode when WXGA signals are input.

■SXGA MODE

This mode takes effect only when SXGA (RGB) signals are input.

SXGA : This is the standard setting.
SXGA+: Select this when the screen is cut off.

Changing the display language

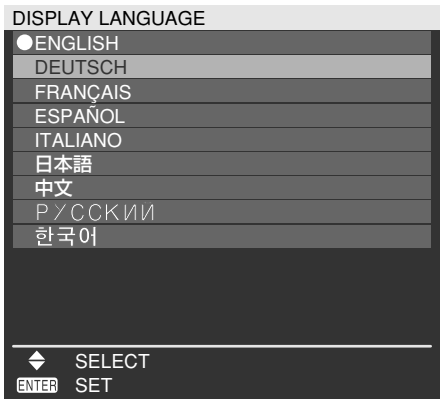

Menus, setting items, adjustment screens, and control button names will be displayed in the language the user chooses.
The available languages are:
ENGLISH, DEUTSCH, FRANÇAIS, ESPAÑOL, ITALIANO, 日本語, 中文, РУССКИИ, 한국어.

Note
- The projector’s on-screen display is set to the English language by default.

OPTION1 settings

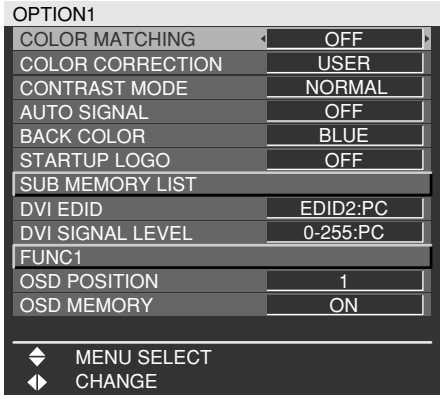

■ COLOR MATCHING

When multiple sets are used simultaneously, this projector allows the user to correct the difference of colours among the sets.

① Press ▲ ▼ to select "COLOR MATCHING".

② Press ◀ ▶ to switch "COLOR MATCHING".

The setting will change as follows each time ◀ ▶ is pressed.

OFF : Colour matching adjustment is not carried out.

3COLORS : It is possible to adjust the 3 colours of "R (Red)", "G (Green)" and "B (Blue)" and "Wh (White)"*.
* When "3COLORS" is selected, only the brightness can be adjusted for "Wh".

7COLORS : It is possible to adjust the 7 colours of "R (Red)", "G (Green)", "B (Blue)", "Cy (Cyan)", "Mg (Magenta)", "Ye (Yellow)" and "Wh (White)".

MEASURE : Refer to "Adjusting the colour matching using a colourimeter" on the right for details on these modes.

If "3COLORS" or "7COLORS" was selected in step 2.

③ Press the ENTER button.

The "COLOR MATCHING: 3COLORS" or "COLOR MATCHING: 7COLORS" screen will be displayed.

④ Press ▲ ▼ to select "R", "G", "B" and "Wh".

("R", "G", "B", "Cy", "Mg", "Ye" and "Wh" when selecting "7COLORS".)

⑤ Press the ENTER button.

⑥ Press ◀ ▶ to adjust the values.

These values can be adjusted from 0 to 2048.
(If the default value of the colour is 2048, the value can be adjusted from 256 to 2048.)

Note

- **The effects of correcting the adjustment colour**
  When tuning the correction colour that is the same as the adjustment colour
  : The brightness of the adjustment colour changes.
  When tuning the correction colour RED
  : RED is added to or reduced from the adjustment colour.
  When tuning the correction colour GREEN
  : GREEN is added to or reduced from the adjustment colour.
  When tuning the correction colour BLUE
  : BLUE is added to or reduced from the adjustment colour.
- This adjustment should be carried out by a person who is familiar with the projector or by a service person because a high level of skill is required to make successful adjustment.
- Pressing the DEFAULT button will restore the factory defaults for all items.
- When any setting other than "OFF" has been selected for "COLOR MATCHING", "AI", "COLOR CORRECTION" and "COLOR TEMP" settings are not adjustable.
- When "AUTO TESTPATTERN" is set to "ON", the test pattern for adjusting the adjustment colour is automatically displayed.

■ Adjusting the colour matching using a colourimeter

The "R (Red)", "G (Green)", "B (Blue)", "Cy (Cyan)", "Mg (Magenta)", "Ye (Yellow)" and "Wh (White)" colours can be changed to the desired hues using a colourimeter which is capable of measuring the chromaticity coordinates and luminance.

Inputting the current luminance and chromaticity coordinates

① Press ▲ ▼ to select "COLOR MATCHING".

② Press ◀ ▶ to select "MEASURE".

③ Press the ENTER button.

The "COLOR MATCHING:MEASURE" screen will be displayed.

④ Press ▲ ▼ to select "MEASURED DATA".

⑤ Press the ENTER button.

The "MEASURED DATA" screen will be displayed.

⑥ Use the colourimeter to measure the luminance (Y) and chromaticity coordinates (x, y).

⑦ Press ▲ ▼ to select the colours, and press ◀ ▶ to select their values.

(Continued on the next page)

ENGLISH

⑧ **After all the data has been input, press the MENU button.**

The "COLOR MATCHING:MEASURE" screen will be displayed.

Inputting the coordinates of a desired colour

⑨ **Press ▲ ▼ to select "TARGET DATA".**

⑩ **Press the ENTER button.**

The "TARGET DATA" screen will be displayed.

⑪ **Press ▲ ▼ to select the desired colours, and press ◀ ▶ to input their coordinates.**

⑫ **After all the data has been input, press the MENU button.**

Note
- If the target data is outside the colour range of the projector, the colours will not be projected correctly.
- When "AUTO TESTPATTERN" is set to "ON", the test pattern for adjusting the adjustment colour is automatically displayed.
- Set "PICTURE MODE" to "DYNAMIC" when measuring the measured data using a colourimeter or other measuring device.
- Depending on the measuring device being used and the environment in which measurements are made, discrepancies sometimes occur in the colour coordinates of the target data and the values given by the measuring device.

■ COLOR CORRECTION

OFF : This is the standard setting.
USER : The six colours of red, green, blue, cyan, magenta and yellow can be adjusted and registered for each of four signal systems: Video, S-Video, RGB and YPBPR.
Press the ENTER button to make the detailed settings.

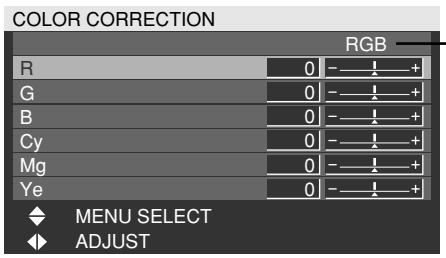

The current signal system is displayed.

■ CONTRAST MODE

There are two modes for adjusting to the operating environment.
NORMAL : The brightness is set to maximum.
HIGH : The contrast is set to maximum.

■ AUTO SIGNAL

The position where the screen is displayed can be adjusted automatically without pressing the AUTO SETUP button on the remote control each time signals are input when signals are input frequently such as when the projector is used at a conference.
ON : Auto setup is performed automatically when the video signals of the images being projected have changed.
OFF : The input auto setup function is set to OFF.

■ BACK COLOR

You can set the colours of the screen when no signal is input to the projector.
BLUE : Set screen colour to blue.
BLACK : Set screen colour to black.
LOGO1 : The picture registered by the user will be projected.
LOGO2 : The Panasonic logo is projected.

■ STARTUP LOGO

This sets the startup logo that is projected when the power is turned on.
LOGO2 : This is the standard setting. The Panasonic logo is projected.
NONE : "STARTUP LOGO" is disabled.
LOGO1 : The picture registered by the user will be projected.

Note
- Separate software is required in order to create the pictures to use for "LOGO1". Consult your dealer.

■ SUB MEMORY LIST

Multiple sets of image adjustment data (PICTURE, POSITION, ADVANCED MENU adjustment values) for the same kind of signal can be registered.

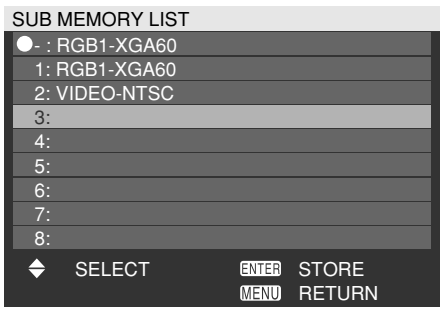

Registering in sub memory

① Select the sub memory number to be registered using the ▲ ▼ buttons.

② Press the ENTER button.

Note • Sub memories range from 1 to 8.

How to select sub memory

① Select sub memory number (1 to 8) using the ▲ ▼ buttons. Select "–" if you do not wish to use the sub memory.

② Press the ENTER button.

Note • You cannot select sub memory of a different signal system.

How to erase sub memory

① Select sub memory number (1 to 8) corresponding to sub memory to be erased using ▲ ▼ buttons.

② Press the DEFAULT button.

③ Read the confirmation message and select.

■DVI EDID

When the projector and external equipment are connected by DVI connection but a proper image cannot be obtained, switch this setting.

EDID1
Select this mainly when external equipment (DVD player, etc.) that outputs movie video signals is connected to the DVI terminal.

EDID2:PC
Select this mainly when external equipment (personal computer, etc.) that outputs still image video signals is connected to the DVI terminal.

Mode	EDID data
EDID1	480p, 576p, 1080/60i, 1080/50i, 720/60p, 720/50p, 1080/60p, 1080/50p
EDID2:PC	VGA60, SVGA60, XGA50, XGA60, XGA70, XGA75, XGA85, WXGA768/50*, WXGA768/60*, SXGA60

* PT-DW5100E, PT-DW5100EL only

Note
- The optimum setting differs according to the connected external equipment. Be sure to check the operating instructions for the external equipment, etc.
- Depending on the setting, some equipment may not provide images or otherwise operate properly.

■DVI SIGNAL LEVEL

When the projector and external equipment are connected by DVI connection but a proper image cannot be obtained, switch this setting.

0-255:PC
Select this mainly when connecting external equipment (personal computer, etc.) using the DVI terminal output.

16-235
Select this mainly when connecting external equipment (DVD player, etc.) using the HDMI terminal output with a conversion cable, etc.

Note
- The optimum setting differs according to the connected external equipment. Be sure to check the operating instructions for the external equipment, etc.
- Depending on the setting, some equipment may not provide images or otherwise operate properly.

■FUNC1

The user can set the function for the remote control's FUNC1 button.

SYSTEM SELECTOR:
The button functions in the same way as "SYSTEM SELECTOR" of "PICTURE".

SYSTEM DAYLIGHT VIEW:
This button has the same functions as "SYSTEM DAYLIGHT VIEW" of "PICTURE".

SUB MEMORY LIST:
This button has the same functions as "SUB MEMORY LIST" of "OPTION1".

■OSD POSITION

The user can specify the position of the on-screen menu indications.

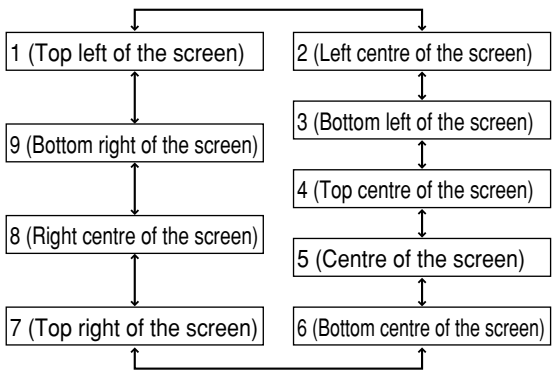

■OSD MEMORY

This lets you save the cursor position in on-screen menus.

ON : The cursor position is saved.
OFF : The cursor position is not saved.

Note • Even when this is set to "ON", the cursor position is not saved if the main power of the projector is turned off.

ENGLISH

OPTION2 settings

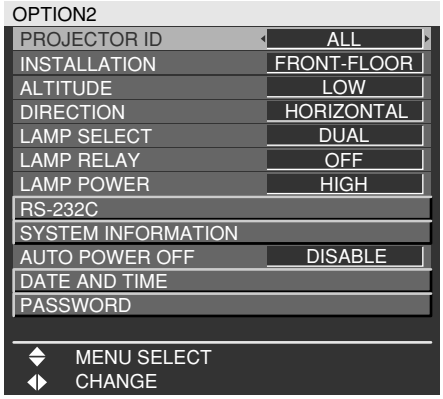

■PROJECTOR ID

The projector has an ID number setting function that helps the user to control two or more projectors either simultaneously or separately with a single remote control. **The ID number is set to "ALL" by default. Hence the ID number need not be set when only one projector is used.**

1 – 64 : The ID number is set in this range.

Note
- The ID number can be set to "ALL", or selected from "1" to "64".
- If the projectors are given ID numbers, their remote controls must be assigned the same ID numbers, respectively.
- If the ID number of a projector is set to "ALL", it can be controlled by the remote control or the PC with any ID number.
  If multiple projectors are used and some of them have their IDs set to "ALL", they cannot be controlled separately from the projectors with other ID numbers.
  For details on remote control ID setting, see page 15.

■INSTALLATION

Switch this setting according to the projector installation method.

FRONT-FLOOR

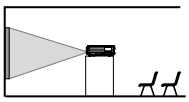

FRONT-CEILING

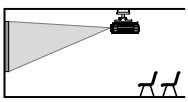

REAR-FLOOR

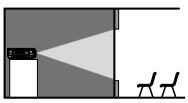

REAR-CEILING

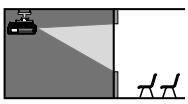

■ALTITUDE

The fan can be controlled in accordance with the operating conditions.

LOW : This is the standard setting.
HIGH : This is selected when using the projector at an altitude of over 1 400 m.

■DIRECTION

The fan can be controlled in accordance with the direction in which the images are to be projected.

HORIZONTAL: This is the standard setting.
VERTICAL : This is selected when projecting images at a significant angle toward the vertical (more than 30 degrees from the horizontal).

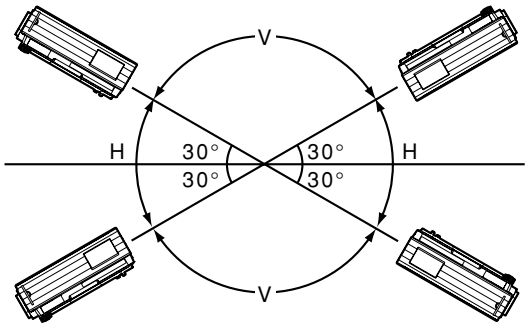

H: HORIZONTAL
V: VERTICAL

Attention
- Select the correct "DIRECTION" setting in accordance with the direction in which the images are to be projected.
  Using the projector at the wrong "DIRECTION" setting will shorten the service life of the lamps.

■ LAMP SELECT

"LAMP SELECT" is used to choose from "SINGLE" and "DUAL" modes depending on user's needs or viewing conditions.
In "SINGLE" mode, the projector may automatically select either lamp from the 2 lamps, or the particular lamp can be specified.

DUAL : Two lamps are used simultaneously.
SINGLE : One of either lamps is used (lamp with shorter operating hours is automatically selected).
LAMP1 : Lamp Unit 1 is always used.
LAMP2 : Lamp Unit 2 is always used.

When one of the above settings is selected, it will take effect after the ENTER button is pressed.

Note
- If, in the "SINGLE", "LAMP1" or "LAMP2" mode, one lamp remains off or the currently active lamp exceeds 2 000 hours of cumulative operating time (when "HIGH" is selected as the "LAMP POWER" setting), the other lamp will light. If, in the "DUAL" mode, one lamp remains off or the currently active lamp exceeds 2 000 hours of cumulative operating time (when "HIGH" is selected as the "LAMP POWER" setting), the other lamp alone will light.
  However, if both lamps remain off or the 2 000 hours of cumulative operating time (when "HIGH" is selected as the "LAMP POWER" setting) are exceeded, the projector will enter the standby mode.
- The colours of the items indicate the status.
  Green → Current setting
  Yellow → Current setting (when a lamp fails or fails to light)
  Red → Lamp that has failed to light
  White → Any other status
- If the projector is repeatedly used for short periods of time, the lamps will need to be replaced more frequently.

■ LAMP RELAY

If using the projector for a continuous period of 24 hours or more, this setting can be used to automatically switch the lamps that are turned on in order to reduce the lamp deterioration that can occur as a result of continuous use.

OFF : This is the standard setting. "LAMP RELAY" is disabled.
00:00 - 23:00
: This can be set in one hour intervals from 00:00 to 23:00.

Note
- Only when "DUAL" or "SINGLE" is selected in "LAMP SELECT", "LAMP RELAY" is active. If "LAMP1" or "LAMP2" is selected, "LAMP RELAY" function is not available.
- When "DUAL" is selected in "LAMP SELECT", only one lamp will light for a 4-hour period after the set time.
- When "SINGLE" is selected in "LAMP SELECT", the lamp that was off at the set time will light, and then the lamp that was lighted until the set time will turn off.
- The setting time will be the local time. (page 38)

■ LAMP POWER

The luminance of the projection lamp can be changed depending on user's needs or the viewing conditions.

HIGH : Set when high brightness is necessary.
LOW : Set when high brightness is not necessary.

Note
- When set to "LOW", it is possible to reduce power consumption, reduce operating noise and extend lamp service life.

■ RS-232C

This sets the communication parameters at the serial terminals.
For details on the serial terminals, refer to "Using the serial terminals" (page 51).

(IN) BAUDRATE : 9600, 19200 or 38400 is selected.
(IN) PARITY : NONE, EVEN or ODD is selected.
(OUT) BAUDRATE: 9600, 19200 or 38400 is selected.
(OUT) PARITY : NONE, EVEN or ODD is selected.
VPS SYSTEM : MASTER or SLAVE is selected.
GROUP : A to Z is selected. MASTER or SLAVE is also selected.

■SYSTEM INFORMATION

The projector's system information can be viewed.

SYSTEM INFORMATION	
MAIN VERSION	1.00.00
NETWORK VERSION	1.00
PROJECTOR RUNTIME	300h
LAMP1 LOW	100h
HIGH	200h
TOTAL	300h
LAMP2 LOW	100h
HIGH	200h
TOTAL	300h
LAMP1 ON	20
LAMP2 ON	20
MENU RETURN	

■AUTO POWER OFF

The projector can be automatically set to the standby mode if no signals are input for the set duration.

DISABLE:
This is the standard setting. This function is set to OFF.

45MIN. – 90MIN.:
The duration can be set in 15-minute increments from 45 to 90 minutes.

■DATE AND TIME

This lets you set the time zone and the current date and time for the projector's internal clock.

TIME ZONE
: Set the time zone of your country.

ADJUST CLOCK
: Set the current date and time.

LOCAL DATE/LOCAL TIME
: Date and time set in above are displayed.

■PASSWORD

This function is used by a service person.
Input the password with the numeric buttons (0 to 9) of the remote control and press the ENTER button to confirm the entry.

Displaying the internal test pattern

The projector has eight types of internal test patterns to check the condition of the set.
To display test patterns, follow the steps below.

Press the TEST PATTERN button on the remote control.
Or select "TEST PATTERN" in the MAIN MENU and search through the various types of test patterns by using ◀ ▶ buttons.

Note
- Results of adjustment on the image, picture quality, position, size and other factors will not be reflected in test patterns. Be sure to display the input signal before performing various kinds of setting.

■Cycle of displayed internal test patterns

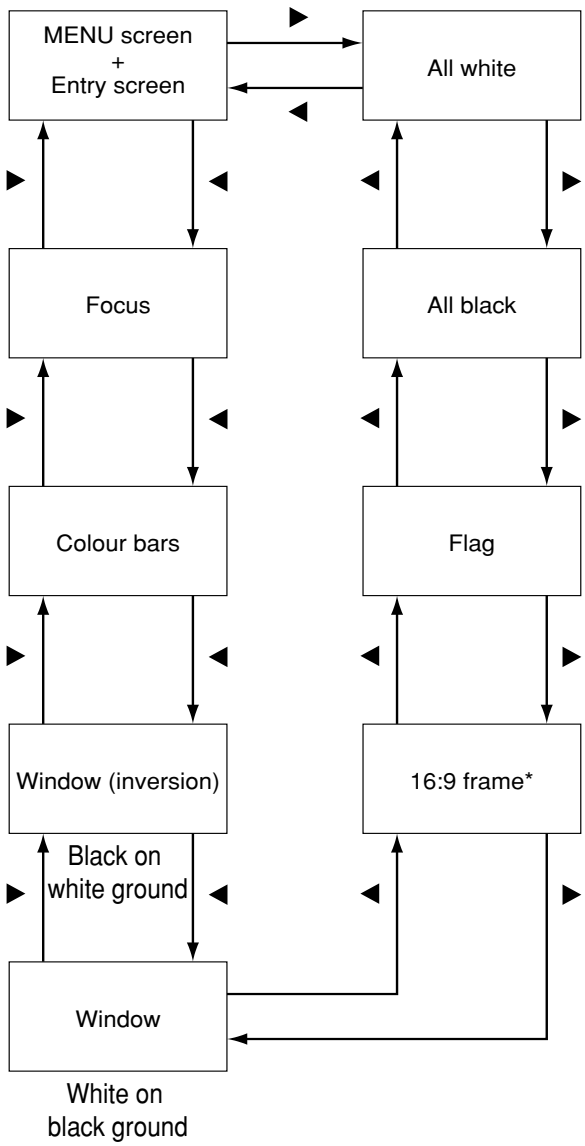

* The PT-DW5100E and PT-DW5100EL support the 4:3 frame format.

Setting the network

The settings required for the network must be established in order to use the Web browser (page 40) functions that the PC uses to control the projector.

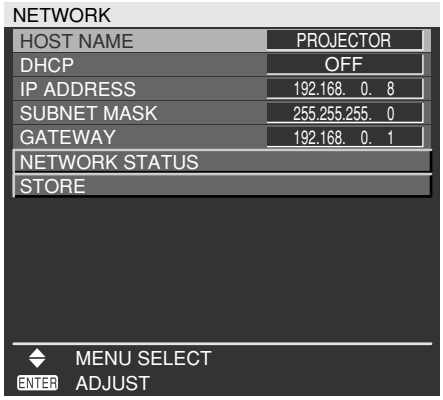

HOST NAME	: Make alteration if necessary when to use the DHCP server. The number of valid characters is 1 to 12 characters (spaces not allowed).
DHCP	: Set the DHCP item to ON when to acquire an IP address automatically using the DHCP server. Set to OFF if DHCP server is not used.
IP ADDRESS	: Enter the IP address if DHCP server is not used.
SUBNET MASK	: Enter the subnet mask if DHCP server is not used.
GATEWAY	: Enter the gateway address if DHCP server is not used.
NETWORK STATUS	: Displays the network status of the unit such as DHCP or IP ADDRESS.
STORE	: The settings are stored in the memory.

Attention
- Before using the DHCP server, make sure the DHCP server is already functioning.
- For details of IP address, subnet mask, and gateway, ask the network administrator.

■Returning the network function setting back to the factory setting

The user can return all settings of network function such as IP address, password and E-mail setting to the factory setting.

①Press ▲ ▼ to select "STORE".

②Hold down the DEFAULT button for 3 seconds.

A confirmation screen will be displayed.
To cancel, press the MENU button. The "NETWORK" screen will be displayed.

③Press the ENTER button.

Connecting the PC

■System requirements

The following system specifications are required in order to use the networking functions.

- **PC**
  OS : Windows XP/2000/Me (Millennium Edition)/98SE (Second Edition)
  CPU : Pentium Ⅲ processor or faster
  RAM : 64 MB or more (128 MB or more for Windows XP/2000)
  Web browser: Internet Explorer 6.0 or newer, Netscape Communicator 7.0 or newer

- **LAN cable**
  Type : Category 5 compatible straight cable
  Length: 100 m or less

Attention
- If you want to use the E-mail function, make sure the system can handle E-mail.

Operation is not guaranteed for all computers that meet the above conditions.

■Connection example

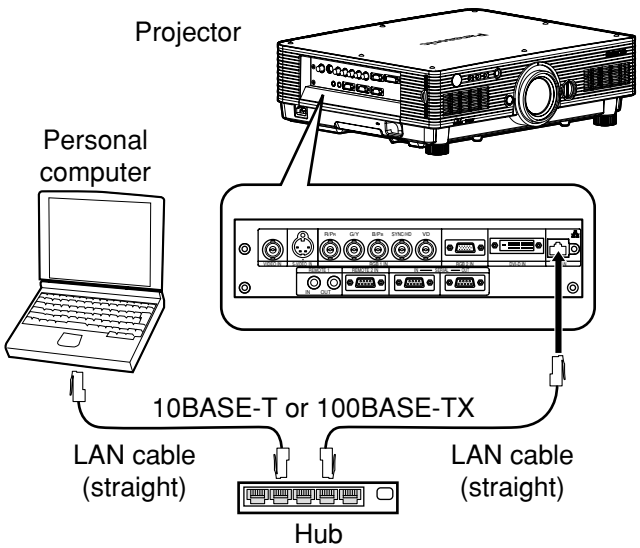

Attention
- Touching the LAN terminal with your hand (or body) when you are carrying a static charge may damage the equipment due to a discharge of static electricity. Therefore, be careful not to touch the LAN terminal or metal parts of the LAN cable.
- Please connect the LAN cable to indoor devices.

ENGLISH

Using Web Browser Control

This projector has networking functions which allow it to be controlled through a Web browser on a PC.
The controlled items are:
• Projector's settings and adjustment
• Projector's status display
• Transmission of a E-mail message when the projector has a problem

■Accessing from the Web browser

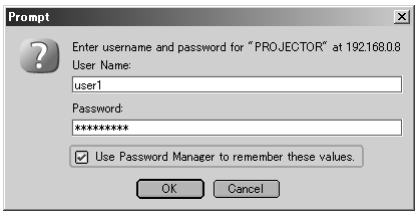

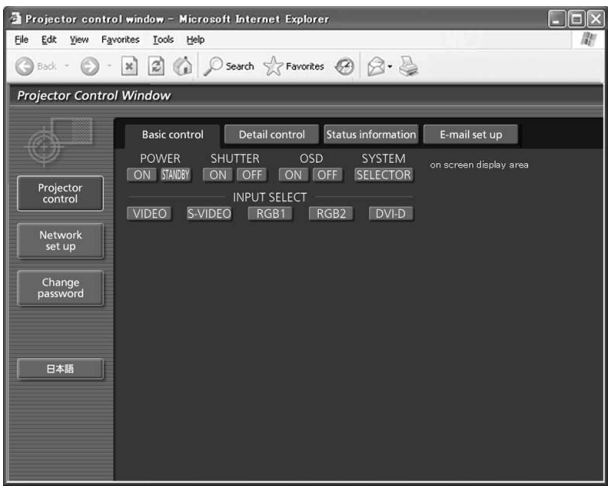

① **Start the Web browser on your PC, then enter the IP address which was set in the projector.**

② **Enter "user1" in the user name field, then enter the password in the password field.**

The default setting is "panasonic" (all lower case). If you have changed the password, enter the new password here.
The host name set in the projector is displayed in the "Realm" field.

③ **Click [OK].**

The Basic Control page is displayed.

Note
• Avoid activating two or more Web browser simultaneously to work out setting or control actions.
• Change the password first of all.

■Password change page

Click [Change password].

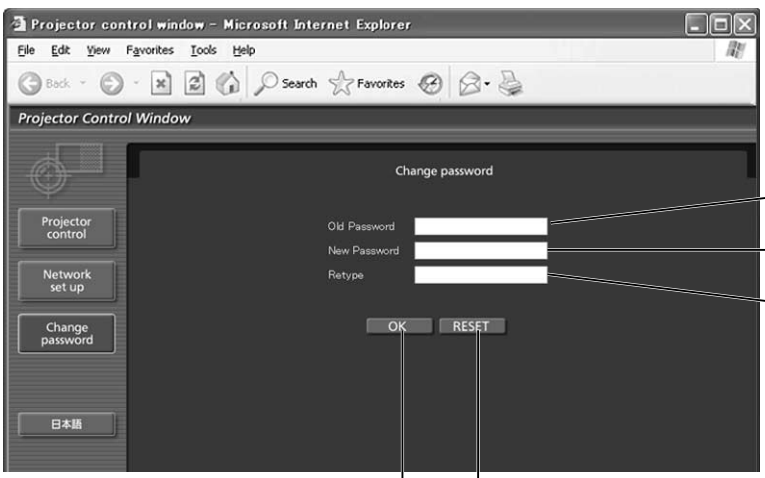

Old password input field

New password input field

New password input field (re-enter for confirmation)

Button for erasing all entered characters

Button for executing password change

■ Basic control page

This page is the first page displayed when the projector is accessed through a Web browser.
To move from another page, click [Projector control], then [Basic control].

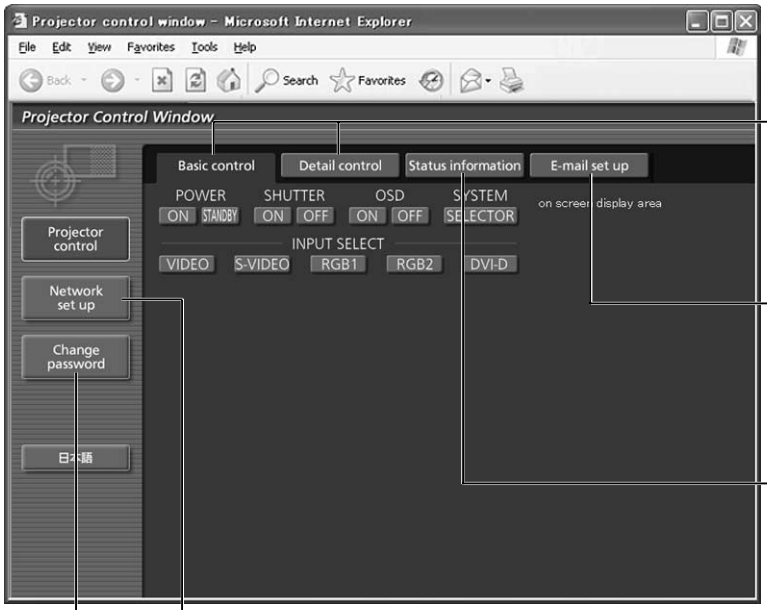

Control button
Click this item, and a projector control page appears.

E-mail set up button
Click this item, and an E-mail setting page appears.

Monitor information button
Click this item, and the status of the projector is displayed.

Network set up button
Click this item, and a network set up page for IP address and other items appear.

Change password button

Power On/Off control

Shutter control

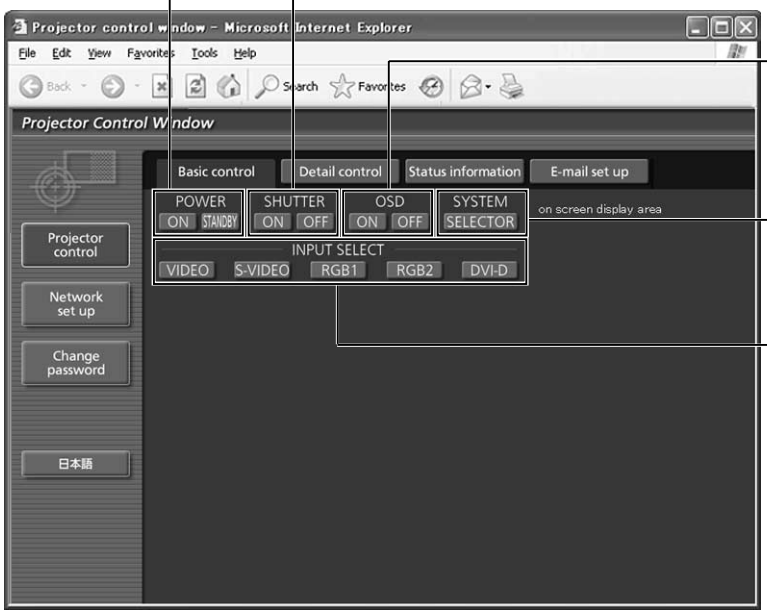

OSD (On-screen Display) display/non-display

Signal System Switching

Use these to select the input signals.

ENGLISH

■Detail control page

Click [Projector control], then [Detail control] to display the Detail control page.

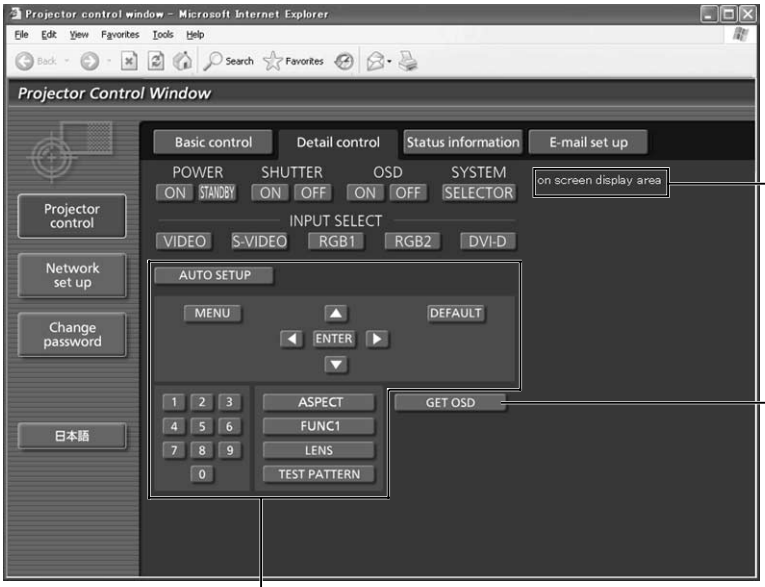

On-screen status is displayed, even if the on-screen of projector is set to off.

This button updates the on-screen description on the right of the control page with the latest information.

Pressing these buttons controls the projector and updates the on-screen description on the right of the control page when control is finished.

■Monitor information page

Click [Projector control], then [Status information] to display the Status information page.
This page displays the projector statuses established for the items shown below.

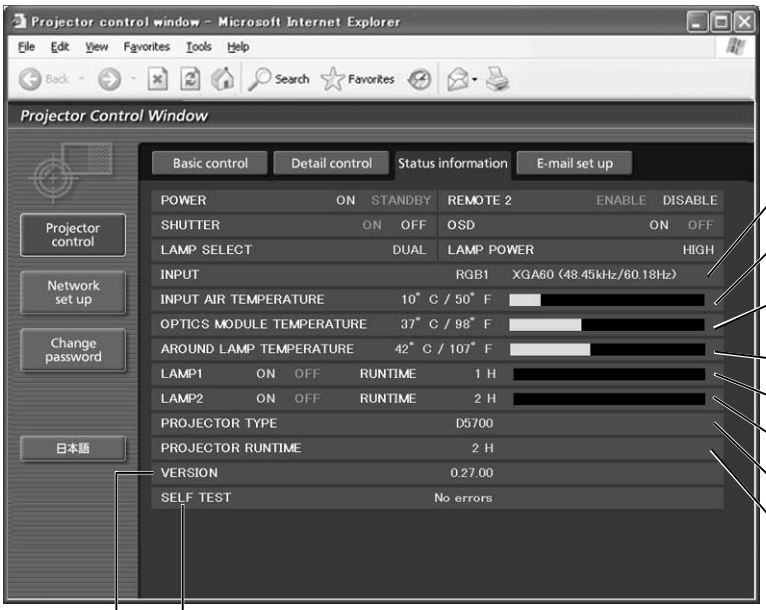

Displays the input switching status.

Displays temperature of projector's intake air.

Displays temperature inside the projector.

Displays temperature around the lamp.

Displays the lamp1 lit hours.

Displays the lamp2 lit hours.

Displays the type of projector.

Displays used hours of the projector.

Displays self-diagnosis information.

Displays the firmware version of the projector main unit.

■ Error information page

When Error Click here! is displayed on the status information screen, click it to display the error details.

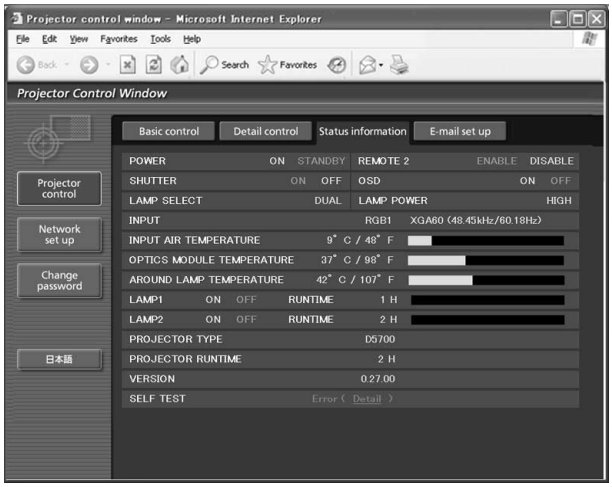

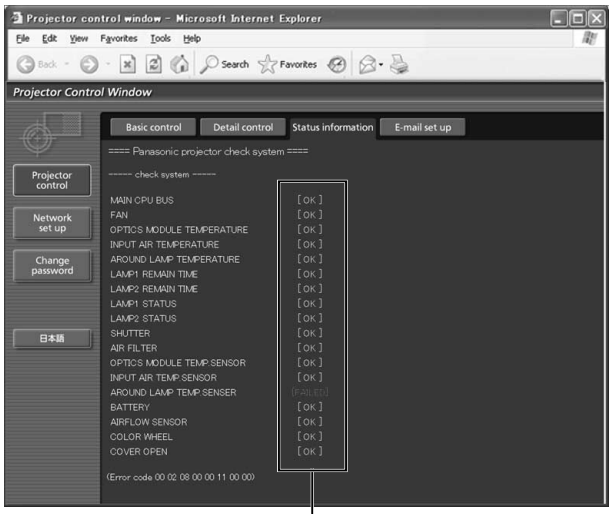

OK: Normal operation
FAILED: Occurrence of trouble

Note • Depending on the nature of the error, the projector may be placed in the standby mode for its own protection.

When [FAILED] has appeared for an item

Parameter	Description
MAIN CPU BUS	Trouble has occurred in the microcomputer circuitry. Consult your dealer.
FAN	Trouble has occurred in the fan or its drive circuit. Consult your dealer.
OPTICS MODULE TEMPERATURE	The temperature inside the projector is high. It may be that the projector is being used where the ambient temperature is high such as near a heating appliance.
INPUT AIR TEMPERATURE	The input air temperature is too high. It may be that the projector is being used where the ambient temperature is high such as near a heating appliance.
AROUND LAMP TEMPERATURE	The temperature near the lamp has risen very high. Something may be blocking the exhaust vent.
LAMP REMAIN TIME	The lamp runtime has exceeded the prescribed cumulative time, and it is now time to replace the lamp.
LAMP STATUS	The lamp has failed to light. Wait a short while for the lamp to cool off, and then turn on the power.
SHUTTER	Trouble has occurred in the shutter circuitry. Consult your dealer.
AIR FILTER	Too much dust accumulates on the air filter. Turn off the MAIN POWER switch using the procedure on page 23 and clean the air filter (refer to page 54).
OPTICS MODULE TEMP.SENSOR	Trouble has occurred in the temperature detection sensor inside the projector. Consult your dealer.
INPUT AIR TEMP.SENSOR	Trouble has occurred in the sensor used to detect the input air temperature. Consult your dealer.
AROUND LAMP TEMP. SENSOR	Trouble has occurred in the temperature detection sensor around lamps. Consult your dealer.
BATTERY	The backup battery has been run out. Consult your dealer.
AIRFLOW SENSOR	Trouble has occurred in the air volume sensor. Consult your dealer.
COLOR WHEEL	Trouble has occurred in the colour wheel or the colour wheel drive circuit. Consult your dealer.
COVER OPEN	The lamp unit cover is not properly fitted. Check the fitting of the lamp unit cover. (page 56)

ENGLISH

■ E-mail set up page

With this projector, if a problem occurs or if the lamp usage time reaches a set value, an E-mail message can be sent to one or more preset E-mail addresses (maximum two addresses). Click [Projector control], then [E-mail set up] to display the E-mail set up page.

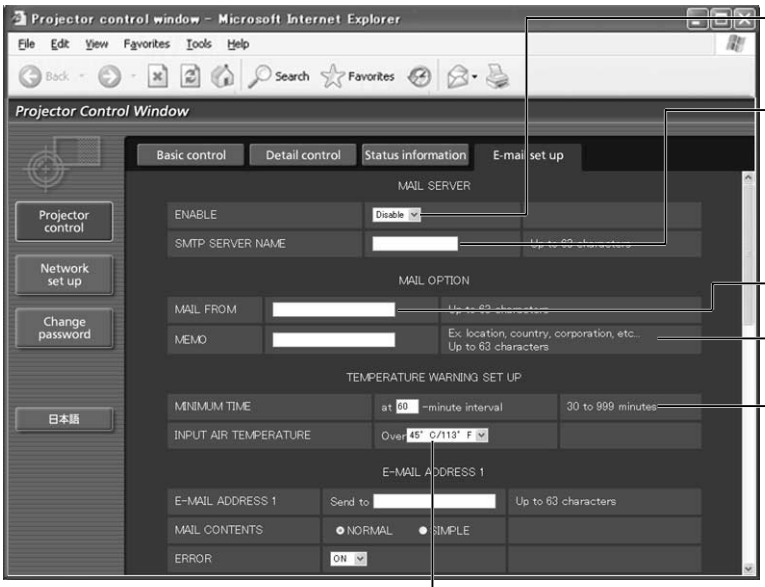

Select "Enable" to use the E-mail function.

Enter the IP address or server name of the E-mail server (SMTP). The DNS server must be set if the server name is entered.

Enter the E-mail address of the projector. (maximum 63 characters)

The user can enter the location of, for example, the installed projector so that the recipient may easily identify the originator of the E-mail. (maximum 63 characters)

The user can modify the minimum time interval of temperature warning mail. The default value is 60 minutes. In this case, the user cannot send another mail for 60 minutes after sending previous temperature warning mail even the set warning temperature is reached again.

The user can modify the threshold temperature for sending temperature warning mail. If the temperature rises above the set value, control sends temperature warning mail.

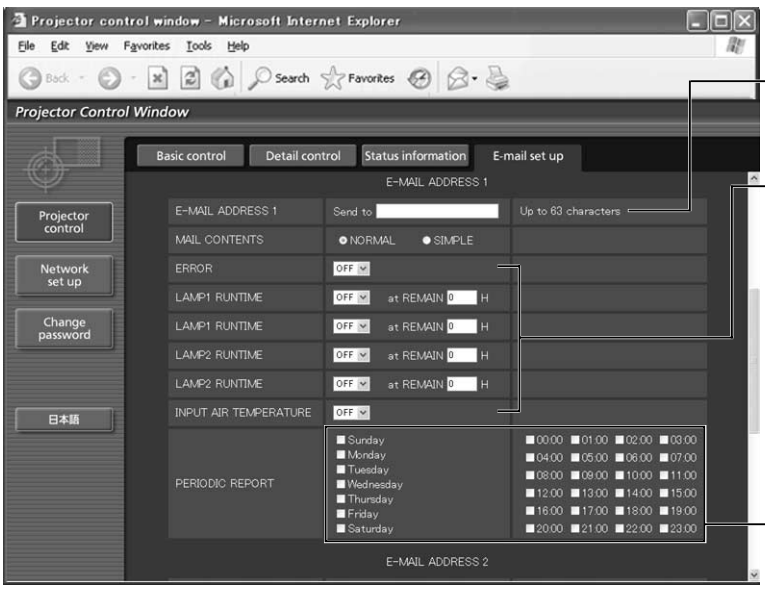

Enter the E-mail address of your desired recipient.

Select the conditions for sending E-mail.

ERROR:
an error is detected by self-diagnosis.

LAMP RUNTIME:
remaining lamp service time has reached the value set in the field.

INPUT AIR TEMPERATURE:
intake air temperature has reached the value set in the field.

Periodic warning interval setting (E-mail is sent on the checked days of the week/times)

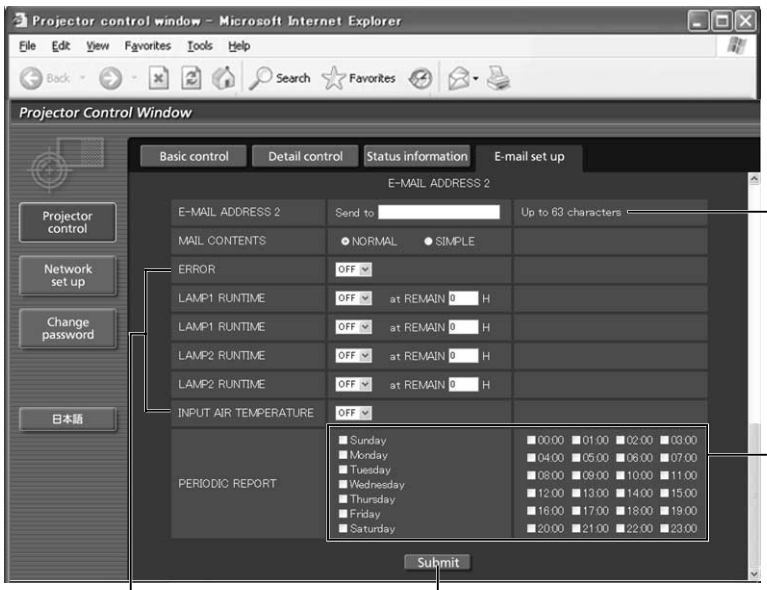

Enter the E-mail address to which the E-mail is to be sent when two E-mail addresses are going to be used. Do not enter it when the second E-mail address is not going to be used.

Check these boxes when E-mail is to be sent periodically to two E-mail addresses. E-mail will be sent at the times and on the days checked.

Button to update settings

Select the conditions for sending the second E-mail.
ERROR: an error is detected by self-diagnosis.
LAMP RUNTIME: remaining lamp service time has reached the value set in the field.
INPUT AIR TEMPERATURE: intake air temperature has reached the value set in the field.

Note • Only alphanumeric characters, ".", "_", "-", or "@" are available to set an E-mail address.

■ Authentication server set up page

The authentication server is set on this page when POP authentication or SMTP authentication is required for mail transmissions. Click [Network set up], then [Authentication set up] to display the authentication server set up page.

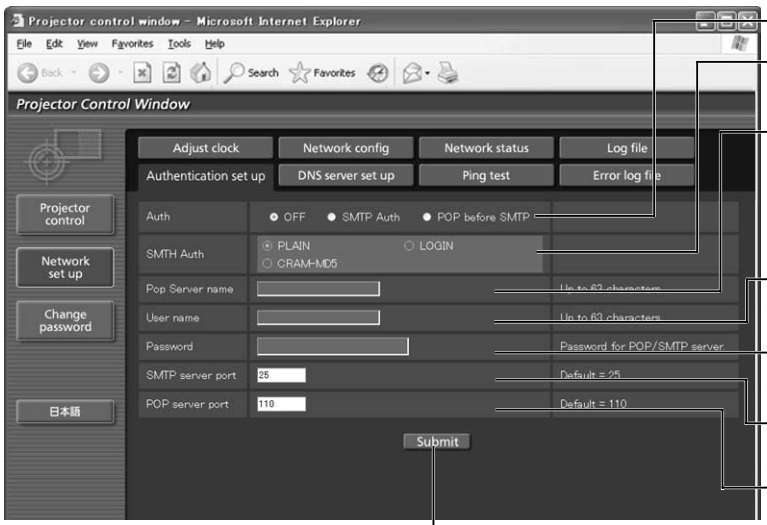

Change the authentication method as desired.

For SMTP authentication, change the authentication method to use, as desired.

Enter the POP server name.
Available input characters: alphanumeric characters (A - Z, a - z, 0 - 9), hyphen (-) period (.)

Enter the user name for the SMTP or POP server.

Enter the password for the SMTP or POP server.

Enter the SMTP server port number.

Enter the POP server port number.

Button to update settings

ENGLISH

■DNS server set up page

Click [Network set up], then [DNS server set up] to display the DNS server set up page.

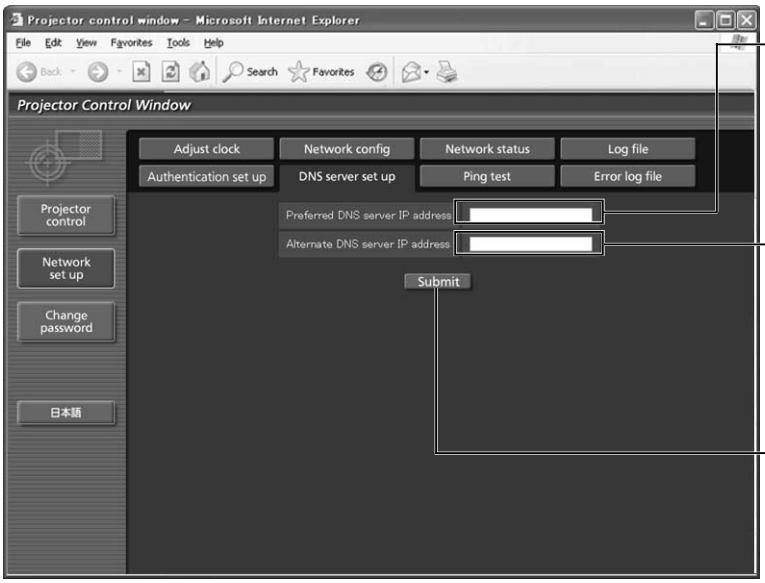

Primary DNS server address
Available input characters:
numbers (0 - 9), period (.)
(ex. 192.168.0.253)

Secondary DNS server address
Available input characters:
numbers (0 - 9), period (.)
(ex. 192.168.0.254)

Button to update settings

■Ping test page

This page makes it possible to check whether the network is connected to the E-mail server, authentication server, DNS server, etc.
Click [Network set up], then [Ping test] to display the Ping test page.

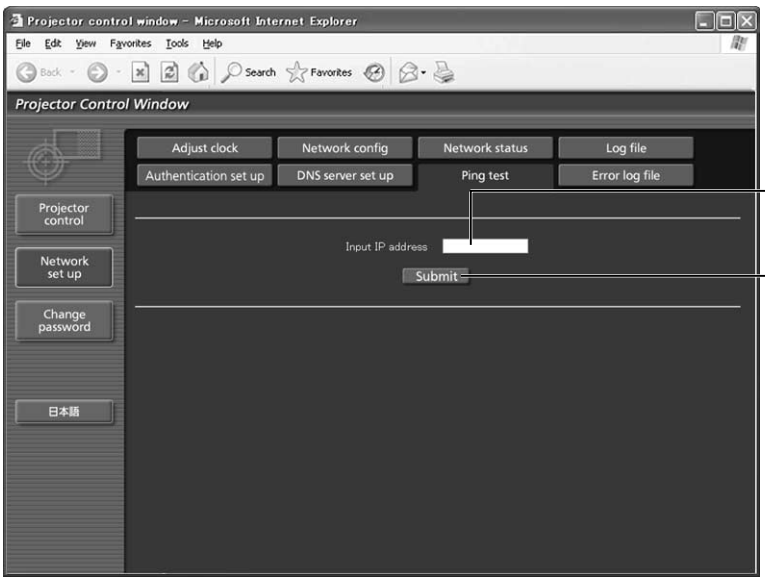

Enter the IP address of the server to be tested.

Button for conducting the test.

```
PING 192.168.0.122 (192.168.0.122): 56 data bytes
64 bytes from 192.168.0.122: icmp_seq=0 ttl=128 time=0.6 ms
64 bytes from 192.168.0.122: icmp_seq=1 ttl=128 time=3.1 ms
64 bytes from 192.168.0.122: icmp_seq=2 ttl=128 time=4.5 ms
64 bytes from 192.168.0.122: icmp_seq=3 ttl=128 time=5.8 ms

--- 192.168.0.122 ping statistics ---
4 packets transmitted, 4 packets received, 0% packet loss
round-trip min/avg/max = 0.6/3.5/5.8 ms
```

Display which appears when the connection was successful.

```
PING 192.168.0.122 (192.168.0.122): 56 data bytes

--- 192.168.0.122 ping statistics ---
4 packets transmitted, 0 packets received, 100% packet loss
```

Display which appears when the connection failed.

■ Contents of mail sent

- Mail with the contents shown below is sent when the E-mail settings have been established.

```
=== Panasonic projector report(CONFIGURE) ===
Projector Type        : D5700

-----  E-mail setup data -----
TEMPERATURE WARNING SETUP
MINIMUM TIME          at [ 60] minutes interval
INPUT AIR TEMPERATURE  Over [ 45C / 113F ]

ERROR                          [ ON ]
LAMP1 RUNTIME                  [ ON ]    at REMAIN [ 100] H
LAMP1 RUNTIME                  [ ON ]    at REMAIN [ 200] H
LAMP2 RUNTIME                  [ ON ]    at REMAIN [ 300] H
LAMP2 RUNTIME                  [ ON ]    at REMAIN [ 400] H
INPUT AIR TEMPERATURE          [ OFF ]

PERIODIC REPORT
Sunday    [ ON ]  Monday  [ OFF ]  Tuesday  [ ON ]  Wednesday  [ OFF ]
Thursday  [ ON ]  Friday  [ OFF ]  Saturday [ ON ]

00:00  [ ON ]   01:00  [ OFF ]   02:00  [ ON ]   03:00  [ OFF ]
04:00  [ OFF ]  05:00  [ ON ]    06:00  [ OFF ]  07:00  [ ON ]
08:00  [ ON ]   09:00  [ OFF ]   10:00  [ ON ]   11:00  [ OFF ]
12:00  [ OFF ]  13:00  [ ON ]    14:00  [ OFF ]  15:00  [ ON ]
16:00  [ ON ]   17:00  [ OFF ]   18:00  [ ON ]   19:00  [ OFF ]
20:00  [ OFF ]  21:00  [ ON ]    22:00  [ OFF ]  23:00  [ ON ]

-----  check system -----
MAIN CPU BUS                       [  OK  ]
FAN                                [  OK  ]
OPTICS MODULE TEMPERATURE          [  OK  ]
INPUT AIR TEMPERATURE              [  OK  ]
AROUND LAMP TEMPERATURE            [  OK  ]
LAMP2 REMAIN TIME                  [  OK  ]
LAMP1 REMAIN TIME                  [  OK  ]
•
•
•
```

- Mail with the contents shown below is sent when an error has occurred.

```
=== Panasonic projector report(ERROR) ===
Projector Type        : D5700

––––– check system –––––
MAIN CPU BUS                       [   OK   ]
FAN                                [   OK   ]
OPTICS MODULE TEMPERATURE          [   OK   ]
INPUT AIR TEMPERATURE              [   OK   ]
AROUND LAMP TEMPERATURE            [   OK   ]
LAMP2 REMAIN TIME                  [   OK   ]
LAMP1 REMAIN TIME                  [   OK   ]
LAMP2 STATUS                       [   OK   ]
LAMP1 STATUS                       [   OK   ]
SHUTTER                            [ FAILED ]
AIR FILTER                         [   OK   ]
OPTICS MODULE TEMP.SENSOR          [   OK   ]
INPUT AIR TEMP.SENSOR              [   OK   ]
AROUND LAMP TEMP.SENSOR            [   OK   ]
BATTERY                            [   OK   ]
AIRFLOW SENSOR                     [   OK   ]
COLOR WHEEL                        [   OK   ]
COVER OPEN                         [   OK   ]
(Error code 00 10 00 00 00 00 00 00)
Input air temperature          : 30 degC /  86 degF
Optics module temperature      : 30 degC /  86 degF
Around lamp temperature        : 37 degC /  98 degF
SET RUNTIME          30 H
POWER ON             33 times
LAMP1 ON             34 times
LAMP1 LOW            25 H
LAMP1 HIGH            5 H
LAMP2 ON             24 times
LAMP2 LOW            16 H
LAMP2 HIGH            4 H
LAMP1 REMAIN       1476 H
LAMP2 REMAIN       1484 H

----- Network configuration -----
IP address 192.168.0.8
MAC address 00:00:00:00:00:00
Thu Mar 02 14:11:02 2006
----- Memo -----
```

■ Adjust clock page

Click [Network set up], then [Adjust clock] to display the Adjust clock page.

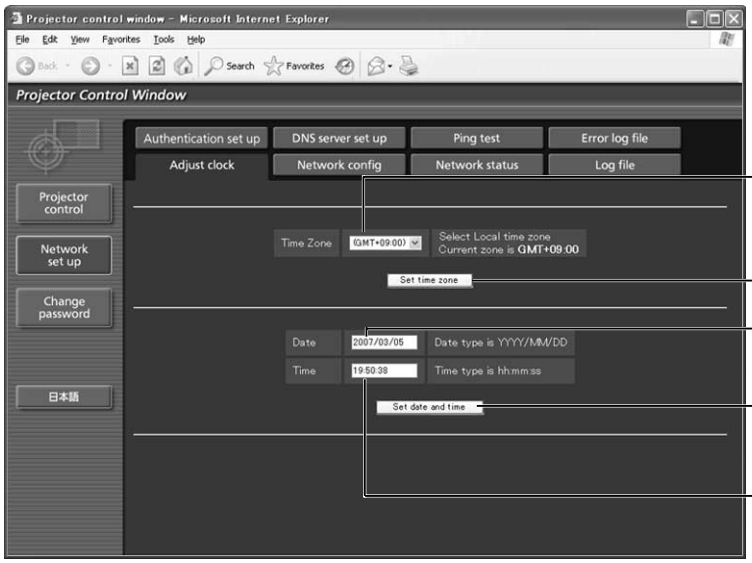

Time zone selection

Button to update time zone setting

New date field

Button to update time and date settings

New time field

Note

- If the time becomes incorrect immediately after setting the correct time, then the battery needs to be changed. Contact the dealer where you bought the projector to have the battery changed.

ENGLISH

■Network config page

Click [Network set up], then [Network config] to display the Network config page.

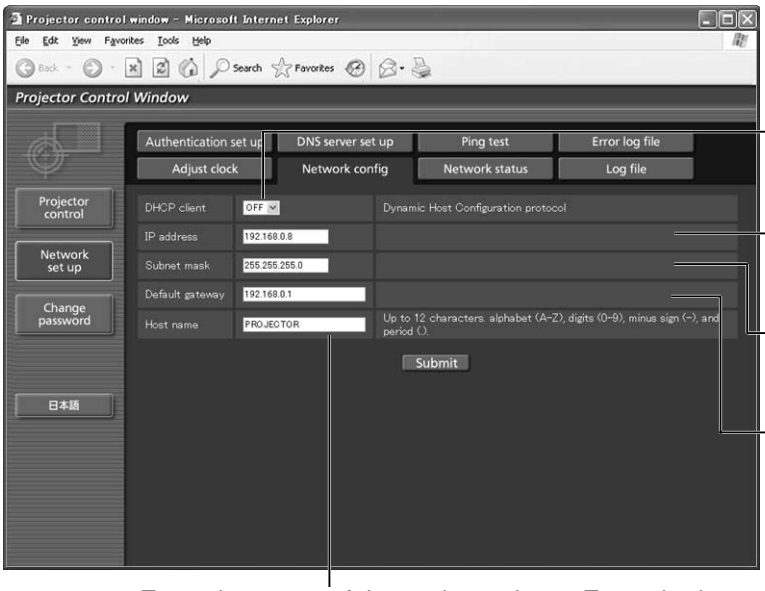

Set this to ON to enable the DHCP client function.

Enter the IP address if DHCP server is not used.

Enter the subnet mask if DHCP server is not used.

Enter the gateway address if DHCP server is not used.

Enter the name of the projector here. Enter the host name here if it is required when the DHCP server is going to be used, for instance.

■Network status page

Click [Network set up], then [Network status] to display the Network status page.

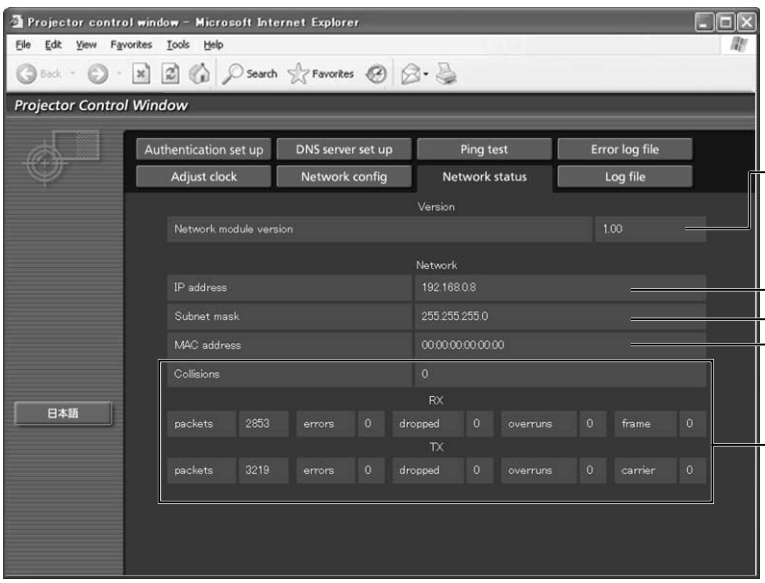

Network software version display

Set IP address display

Set subnet mask display

MAC address display

Network status display

Using the PJLink™ protocol

The network functions of the projector are compatible with PJLink™ Class 1. The operations mentioned below can be performed from a personal computer using the PJLink™ protocol.
• Projector settings
• Projector status inquiry

■Supported commands

The commands for controlling the projector using the PJLink™ protocol are as given in the table below.

Command	Control Description	Remarks
POWR	Power control	Parameter 0 = Standby 1 = Power “ON”
POWR ?	Power status inquiry	Parameter 0 = Standby 1 = Power “ON” 2 = Cooling down 3 = During warm-up
INPT	Input selection	Parameter 11 = RGB1 12 = RGB2 21 = VIDEO 22 = S-VIDEO 31 = DVI-D
INPT ?	Input selection inquiry	
AVMT	Shutter control	Parameter 30 = Shutter mode OFF (Mute reset of video) 31 = Shutter mode ON (Mute video)
AVMT ?	Shutter status inquiry	
ERST ?	Error status inquiry	Parameter 1st byte: Refers to fan error; one of 0 to 2 2nd byte: Refers to lamp error; one of 0 to 2 3rd byte: Refers to temperature error; one of 0 to 2 4th byte: Refers to cover open error; one of 0 to 2 5th byte: Refers to filter warning; one of 0 to 2 6th byte: Refers to some other error; one of 0 to 2 The meaning of 0 to 2 is as given below. 0 = Error not detected 1 = Warning 2 = Error
LAMP ?	Lamp status inquiry	Parameter First number (digits 1 to 5): Lamp1 cumulative time Second number: 0 = Lamp1 OFF; 1 = Lamp1 ON Third number (digits 0 to 5): Lamp2 cumulative time Fourth number: 0 = Lamp2 OFF; 1 = Lamp2 ON
INST ?	Input selection list inquiry	Parameter responds with following values: “11 12 21 22 31”
NAME ?	Projector name inquiry	Responds with the name set in “HOST NAME” of “NETWORK”
INF1 ?	Manufacturer's name inquiry	Responds with “Panasonic”
INF2 ?	Model name inquiry	Responds with “D5700” or “DW5100”
INFO ?	Other information inquiry	Responds with version number and so on
CLSS ?	Class information inquiry	Responds with “1”

■PJLink™ security authentication

The password used for PJLink™ is the same as the password set for WebBrowser control.
When using these commands without authentication, leave the WebBrowser control password unspecified.

• PJLink™ is a pending trademark in Japan, the United States and other countries and regions. For details on PJLink™ specifications, refer to the Japan Business Machine and Information System Industries Association website. The URL is http://pjlink.jbmia.or.jp/english/

ENGLISH

Setting the security

The projector's security function enables the password input screen to be displayed or a company's URL address to be set and displayed underneath the projected images.

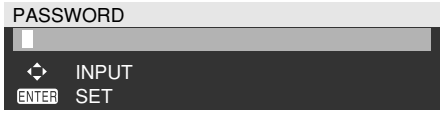

(When using the projector for the first time)
Press the ▲, ▶, ▼, ◀, ▲, ▶, ▼ and ◀ buttons in this order, and press the ENTER button.

(When the password has been changed)
Input the new password, and press the ENTER button.

■PASSWORD

It is possible to display the password input screen each time the power is turned on. If this option is used, no operations except for the POWER button can be performed without inputting the correct password.

ON : Password input is enabled.
OFF : Password input is disabled.

■PASSWORD CHANGE

The password can be changed. Press the ENTER button.

① **Set the password using the ▲, ▼, ◀, ▶ buttons (up to 8 buttons can be set).**

② **Press the ENTER button.**

③ **Confirm the password by inputting it again.**

④ **Press the ENTER button.**
(This completes the settings.)

Note
- Asterisks (*) will appear on the screen in the place of the actual password when the password is input.
- If the password is input incorrectly, the display returns to "NEW". Input the correct password.

■DISPLAY SETTING

The image can be displayed based on the settings below.

OFF : The normal image is displayed.
TEXT : Preset text is constantly displayed under the projected image.
LOGO1 : The picture registered by the user will be projected.
LOGO2 : The Panasonic logo is projected.

■TEXT CHANGE

The text which is to be displayed when "TEXT" has been selected for the "DISPLAY SETTING" can be changed. Press the ENTER button.

① **Select the text using the ▲, ▼, ◀, ▶ buttons, and press the ENTER button. (Up to 22 alphanumerics can be input in succession.)**

② **Select "OK" using the ▲, ▼, ◀, ▶ buttons, and press the ENTER button.**

- To cancel the change at any time, select "CANCEL".

■CONTROL DEVICE SETUP

It is possible to restrict operation from the remote control and the main unit controls.

CONTROL PANEL :
Operation from the main unit controls can be restricted.
ENABLE : Main unit control operation is enabled
DISABLE : Main unit control operation is disabled

REMOTE CONTROLLER :
Operation from the remote control can be restricted.
ENABLE : Remote control operation is enabled
DISABLE : Remote control operation is disabled

Note
- Setting changes will be reflected only when you select "OK" at the confirmation screen displayed after you press the ENTER button at the "ENABLE/DISABLE" menu. When the setting has been reflected, the on-screen menu disappears.
  To continue and perform other operations, press the MENU button and display the MAIN MENU.
- When you attempt to operate controls (remote control or main unit) that are set to "DISABLE", the password input screen is displayed. To change the setting, input the security password and change the operation setting. The password input screen disappears when you press the MENU button or if you do not perform any operation for 10 seconds.

Using the serial terminals

The main unit is equipped with SERIAL terminals located in its terminal section on the side, and this terminal is compliant with RS-232C. Also a serial output terminal is provided to enable plural projector control.

■ Examples of connection

- **Single projector**

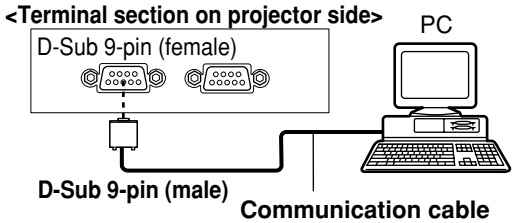

- **Plural projectors**

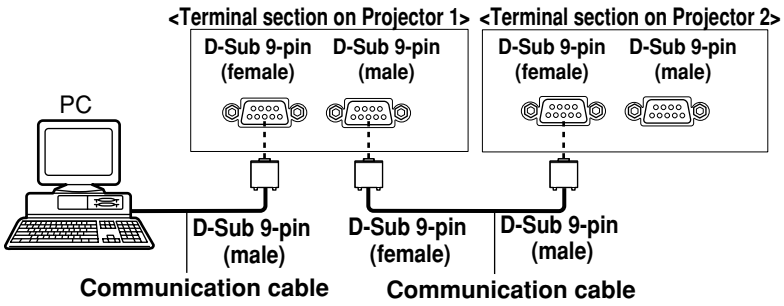

■ Pin assignments and signal names

D-Sub 9-pin (female), external appearance

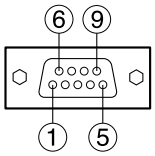

Serial input terminal

Pin No.	Signal name	Description
①		NC
②	TXD	Send data
③	RXD	Receive data
④		Connected internally
⑤	GND	Ground
⑥		NC
⑦	CTS	Connected internally
⑧	RTS	
⑨		NC

D-Sub 9-pin (male), external appearance

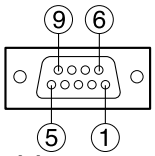

Serial output terminal

Pin No.	Signal name	Description
①		NC
②	RXD	Receive data
③	TXD	Send data
④		NC
⑤	GND	Ground
⑥		NC
⑦	RTS	Connected internally
⑧	CTS	
⑨		NC

■ Communication conditions (Factory setting)

Signal level	RS-232C compliant
Synchronization method	Start-stop synchronization
Baud rate	9 600 bps
Parity	None
Character length	8 bits
Stop bit	1 bit
X parameter	None
S parameter	None

■ Basic format

Transmission from the computer begins with STX, then the ID, command, parameter, and ETX are sent in this order. Add parameters according to the details of control.

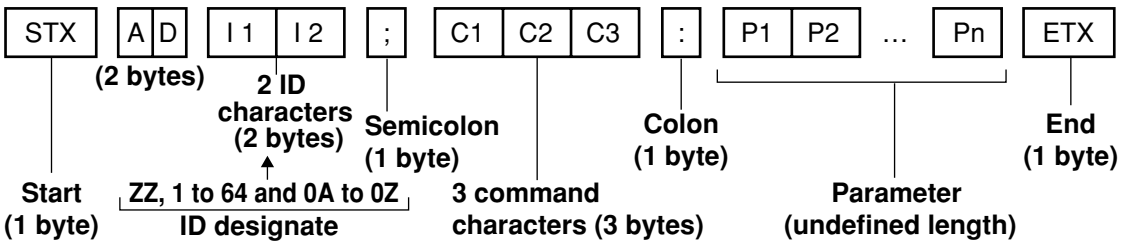

Attention
- If a command is sent within about 60 seconds after the lamp is turned on, the response may be returned late or the command may be unable to be executed. Try sending and receiving commands after 60 seconds has elapsed.
- When sending several commands, be sure to wait for more than 0.5 seconds after receiving a response from the projector, and then send the next command. When sending commands without parameters, a colon (:) is not necessary.

Note
- If a command cannot be executed, the projector will send an “ER401” response to the computer.
- If an invalid command is received, the projector will send an “ER402” response to the computer.
- Projector ID supported on the RS-232C interface is ZZ (ALL) and a group of 1 to 64 and 0A to 0Z.
- If a command is sent with a projector ID specified, the projector will return answer back only in the following cases:
  if it coincides with the projector ID,
  ID specification is ALL and VPS-SYSTEM is the master, or
  ID specification is group and Group is the master.
- In the hexadecimal format, STX has the character code 02 and ETX the character code 03.

ENGLISH

■Control commands

When controlling the projector from a computer, the following commands are available:

Command	Function of command	Remarks
PON	Power “ON”	To confirm that the power is ON, use a “Power query” command.
POF	Power “STANDBY”	
QPW	Power query	Parameter 000 = STANDBY 001 = Power “ON”
I I S	Switch input modes	Parameter VID = VIDEO SVD = S-VIDEO RG1 = RGB1 RG2 = RGB2 DVI=DVI-D
QSL	Query for active lamp mode	Parameter 0 = DUAL 1 = SINGLE 2 = LAMP 1 3 = LAMP 2 * “SINGLE” will use the lamp (LAMP 1 or LAMP 2) with shorter operating hours.
LPM	Active lamp mode	Parameter 0 = DUAL 1 = SINGLE 2 = Only LAMP 1 is on 3 = Only LAMP 2 is on
OLP	Lamp power setting	Parameter 0 = HIGH, 1= LOW

Note • If you need a detailed command list, please contact your dealer.

■Cable specifications

<Connecting to a PC>

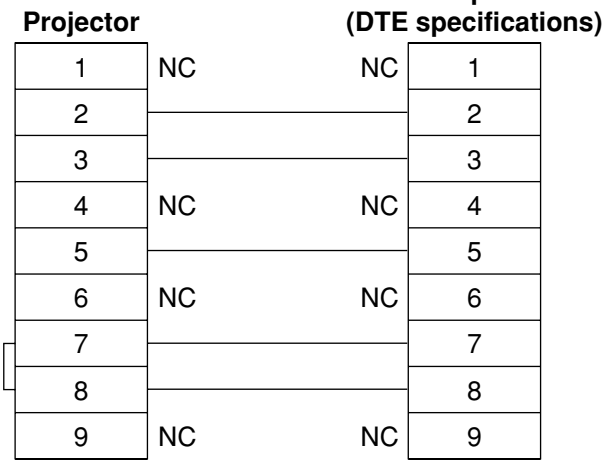

Attention • To connect the computer to the SERIAL terminal, prepare an adequate communication cable that fits to your personal computer.

Using the REMOTE 2 terminal

Using the REMOTE2 IN terminal provided on the side of the main unit, it is possible to operate the projector from a control panel etc. furnished in a distant location where infrared remote control signal cannot be received.

Example of a control panel layout

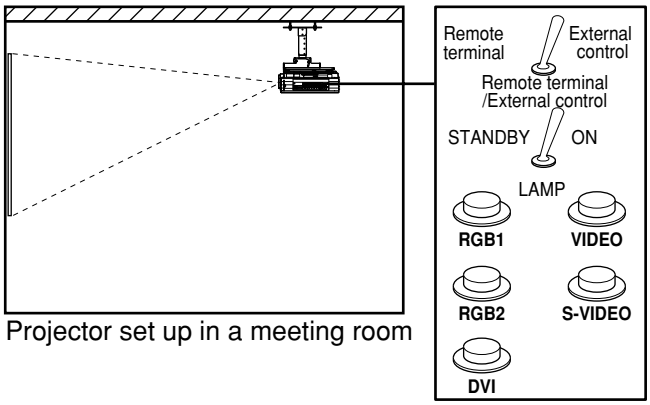

Projector set up in a meeting room

Control panel located in a different room

Pin assignments and control

Be sure to short-circuit Pins ① and ⑨ when controlling.

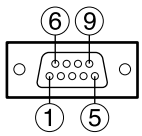

D-Sub 9-pin (female) external appearance

	Names of terminals	Open (H)	Short (L)
①	GND	——	GND
②	POWER	OFF	ON
③	RGB1	Other	RGB1
④	RGB2	Other	RGB2
⑤	VIDEO	Other	VIDEO
⑥	S-VIDEO	Other	S-VIDEO
⑦	DVI	Other	DVI
⑧	SHUTTER	OFF	ON
⑨	RST / SET	Controlled by remote control	Controlled by external contact

Note
- The following buttons on the remote control and the operation area of the projector can no longer be operated when pins ① and ⑨ are shorted:
  POWER button and SHUTTER button.
  Neither will it be possible to use the RS-232C commands or network functions corresponding to these functions.
- If you short pin ① and pin ⑨, and also short one of the pins from ③ to ⑦ and pin ①, then the following buttons on the projector operating area and the remote control can no longer be operated:
  POWER, RGB1, RGB2, DVI-D, VIDEO, S-VIDEO and SHUTTER buttons.
  Neither will it be possible to use the RS-232C commands or network functions corresponding to these functions.

Indication of lamp monitor

This projector is equipped with 3 indicators to show when a lamp needs replacement or there is an abnormal internal temperature. These lamps flash or light up to indicate a problem.
Turn the power off and follow the steps below.

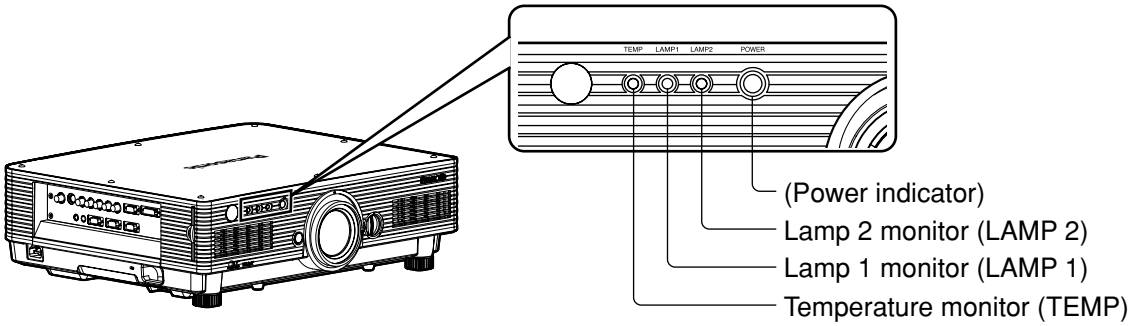

Name of monitor lamp	Lamp indication	Information	Checkpoint	Remedial measure
Temperature monitor **TEMP**	Lighting in red (lamp unit ON)	Warm-up status	• Did you turn on the power when the ambient temperature was low (approx. 0 °C)?	• Wait about five minutes in the current status. • Install the unit in a location having an ambient temperature from 0 °C to 45 °C.
		High temperature inside. (WARNING)	• Check if the ventilation port is blocked. • Is the room air temperature too high? • Is the air filter clogged with dust?	• Remove the object that is blocking the ventilation port. • Move the projector to a temperature of 0 ˚C to 45 ˚C and the humidity of 20 % to 80 % (no condensation). • Turn off the MAIN POWER switch using the procedure on page 23 and clean the air filter (refer to page 54).
	Blinking in red (1 time)	The filter is clogged.		
	Blinking in red (2 times)	High temperature inside (Standby condition)		
	Blinking in red (3 times)	Cooling fan has been stopped.	———	• Turn off the main power supply (MAIN POWER) switch in the procedure shown on page 23 and consult the distributor.
Lamp monitor **LAMP1** **LAMP2**	Lighting in red	Indicates the time for replacing the lamp unit.	• Did you notice a "REPLACE THE LAMP" message on the screen when turning on the projector power supply? • Are lamp units installed correctly?	• This lamp monitor lights up when the lamp unit used hours have reached 1 800 hours (when "HIGH" is selected as the "LAMP POWER" setting).
	Blinking in red (3 times)	Error is detected in the lamp or lamp power.	• Did you turn the power back on immediately after turning it off?	• Wait until the lamp has cooled off, and then turn on the power.
			• Some error has arisen in the lamp circuit. • Check for fluctuation (or drop) in the source voltage.	• Turn off the MAIN POWER switch using the procedure on page 23 and consult the dealer.

Attention
- To solve any problems that the TEMP and LAMP monitor show, first turn the power off by following the steps on pages 22, 23.
- If the power indicator blinks in red (3 times), the projector has malfunctioned. Please consult your dealer.
- If the power indicator flashes red (once), the lamp unit cover is not properly fitted. Check the fitting of the lamp unit cover.

ENGLISH

Cleaning and replacement of air filter

If too much dust accumulates on the air filter, [CLEAN THE AIR FILTER]* appears at the lower left of the screen, and the temperature monitor (TEMP) will blink once. If even more dust is allowed to accumulate, the temperature inside the main unit will rise, the temperature monitor (TEMP) will blink twice, and the power is turned off.
Clean the air filter section once every 100 hours or so as a guideline depending on the location of projector operation.

* It appears only for 30 seconds within 3 minutes after the power is turned on. It disappears if any of the buttons on the rear side of the main unit or on the remote control is pressed.

■Procedure of cleaning

①Turn off the main power and remove the power plug from the receptacle.

Turn off the main power supply observing the procedure (Powering off the projector) on page 23 and then remove the power plug.

②Dismantle the air filter.

There are two air filters, one at the left and one at the right.
Use your finger to pull the air filter tab toward you, and remove it from the main unit.

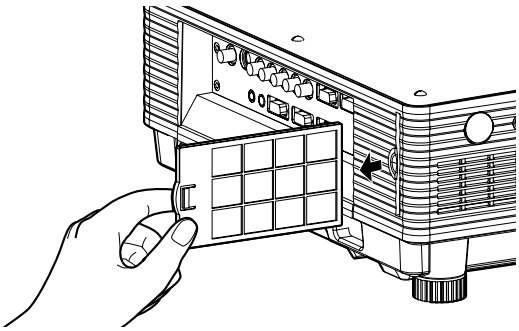

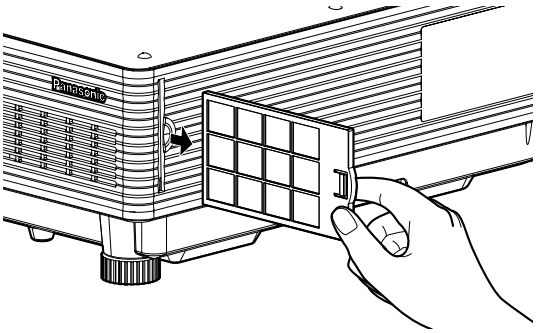

③Clean the air filter.

Suck off deposited dust with a vacuum cleaner.

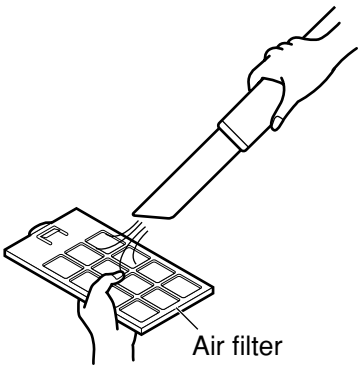

Attention
- Do not to suck in the air filter itself.
- Do not rinse off the air filter with water. Doing so will impair the filter's ability to provide protection from dust.

④Set the air filter.

Set the air filter in the reverse order to step ②.

Attention
- Fit the air filters into place with the filter material facing the back.
  (The left and right filters have the same shape.)
- The air filter must be fitted in place when using the projector.
  Using the projector without the air filter fitted inside, dirt and dust are sucked into the projector, causing failure.

Note
- If cleaning cannot remove the dust completely, then it is a sign to replace the air filter. Consult the dealer. In addition, when the lamp unit is replaced, also replace the air filter.
- Be absolutely sure to use the air filter specifically designed for use with the projector.

Replacing the lamp unit

WARNING!

When replacing the lamp, allow it to cool for at least one hour before handling it.
• The lamp cover gets very hot, and touching it can cause burns.

Make sure that two lamp units are always installed.

Precautions on lamp unit replacement

Remove the power plug and confirm that the surroundings of the lamp unit have cooled off.

- Be careful when handling a light source lamp. The lamp unit has high internal pressure. If improperly handled, explosion might result.
- A used lamp unit may burst if it is handled violently.
  For disposition of used lamps, request an industrial waste disposal contractor.
- If you continue to use a lamp after the replacement time, the lamp may break.
- Phillips screwdriver is necessary when replacing a lamp unit.
  Take care not to slip your hand when using a screwdriver.

Note
- It is not possible to turn on the power unless two lamp units are installed.
- A lamp unit is an optional part. Contact the dealer.
  Replacement lamp unit model No.: ET-LAD57 (single bulb), ET-LAD57W (double bulbs)
- Other lamps than specified above cannot be used. Be sure to use the specified lamp.

ENGLISH

■ When to replace the Lamp unit

The lamp units are consumable parts. The lamp brightness decreases gradually as the cumulative operating time increases, so periodic replacement is necessary. The replacement guideline is 2 000 hours*1, although the lamp may become dead (will not light) before 2 000 hours*1 is reached depending on the characteristics of individual lamps and other factors such as the operating conditions and the installation environment. Therefore, it is recommended for the user to keep a spare lamp unit.
The risk of the lamp bursting increases after 2 000 hours*1 of operation, so the lamp unit turns off automatically.

	On-screen indication REPLACE THE LAMP	Lamp monitor LAMP
After 1 800 hours*2	The indication appears for 30 seconds or until any control button is pressed.	The lamp monitor lights up red even in standby mode.
After 2 000 hours*1	The indication will not disappear unless a control button is pressed.	

*1 This is the operating time if the lamp has only been used at the LAMP POWER “HIGH” setting. If the lamp has only been used at the LAMP POWER “LOW” setting, the operating time is 3 000 hours. When the lamp has been switched from LAMP POWER “HIGH” to “LOW”, the cumulative operating time from the conversion formula below will be 2 000 hours.
Lamp operating time = LAMP POWER “HIGH” operating time + (LAMP POWER “LOW” operating time x 2 ÷ 3).

*2 This is the operating time if the lamp has only been used at the LAMP POWER “HIGH” setting. If the lamp has only been used at the LAMP POWER “LOW” setting, the operating time is 2 700 hours. When the lamp has been switched from LAMP POWER “HIGH” to “LOW”, the cumulative operating time from the conversion formula below will be 1 800 hours.
Lamp operating time = LAMP POWER “HIGH” operating time + (LAMP POWER “LOW” operating time x 2 ÷ 3).

■Lamp unit replacement steps

① Turn the power off by following the steps on page 23, remove the power plug and confirm that the surroundings of the lamp unit have cooled off.

Check that the fan has stopped running.

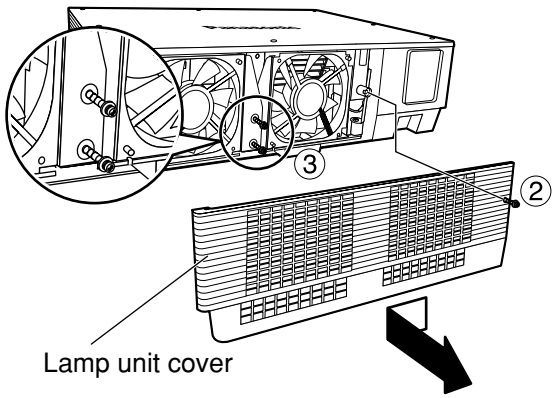

Have a Phillips screwdriver ready ahead of time.

② Remove the screw securing the lamp unit cover, and then slide the lamp unit cover a little toward the left, and remove it.

③ Remove the two screws securing the fan unit.

Note • The lamp units are constructed so that the screws in step ③ do not fall through completely.

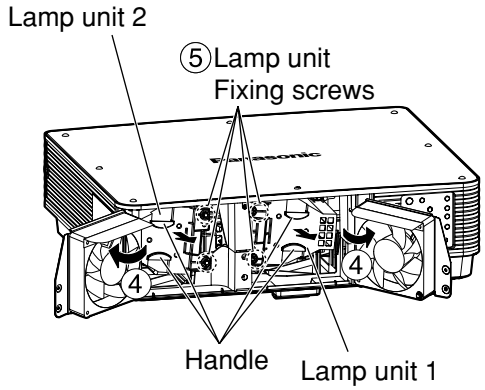

④ Open the fan unit as shown in the figure.

⑤ Remove the screws securing the lamp units (two for each unit), take hold of the handles, and remove the lamp units.

⑥ Install the new lamp unit.

⑦ Use a Phillips screwdriver to securely tighten the 2 lamp unit fixing screws (two for each unit).

⑧ Secure the two screws for securing the fan unit tightly.

⑨ Slide the cover a little toward the right, and secure it using the screw for securing the lamp unit cover tightly.

Attention • Firmly install the lamp unit and lamp unit cover. If not installed firmly, a protection circuit will function and the power will not be turned on.

Caution

The lamp unit will be hot after it has been used.

You might get burned if you touch it while it is still hot.

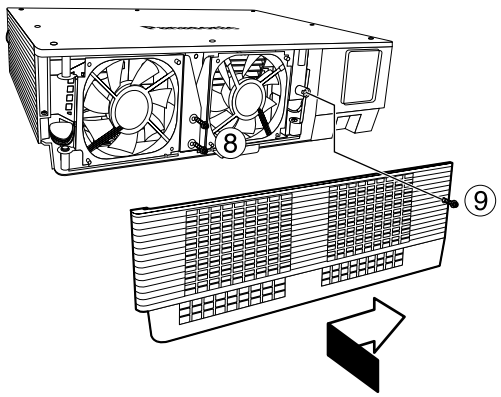

Ceiling Mount Bracket Safeguards

The followings are included with the other accessories.

Safety cable [TTRA0146]	
Wire cable (x 1)	Wire fastening M6 (Length:10 mm) screw (x 1)

The projector and the ceiling mount bracket are designed sufficiently safety though, make sure the safety cable provided with the projector is installed and attached to the bottom of the projector when mounting in the ceiling for safety and security.

Installation work of the ceiling mount bracket should only be carried by a qualified technician according to the following procedure.

- Even if it is guarantee period, the manufacturer is not responsible for any hazard or damage caused by using a ceiling mount bracket which is not purchased from an authorized distributors, or environmental conditions.
- Make sure to use a torque driver and do not use an electrical screwdriver or an impact screwdriver.
- An unused ceiling mount bracket should be removed promptly by qualified technician.

ENGLISH

<Installation procedure>

① Install the ceiling mount bracket according to the Installation Instructions.

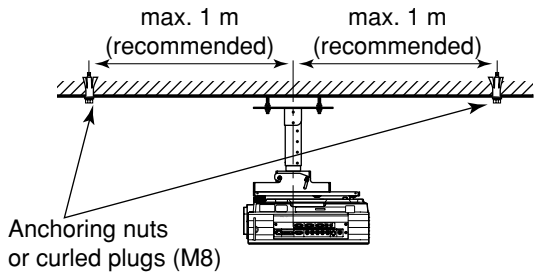

② Attach anchor nuts or curl plugs available in the market (M8) to a strong ceiling surface in positions (left figure) so that there is no slack in the wire cable provided with the projector.

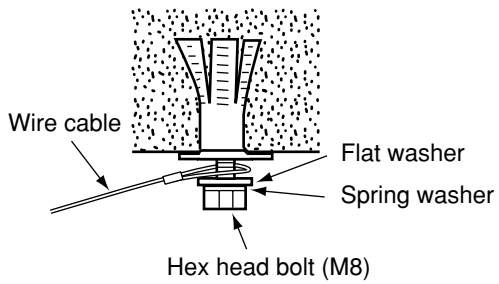

③ Pass the loop of wire rope through anchoring area and tighten the hex head bolts.

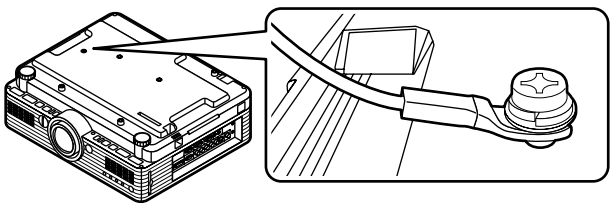

④ Attach the metal fittings at the ends of the cable to the locking holes in the projector main unit using the provided wire fastening M6 screws, and tighten the screws firmly to secure the projector.

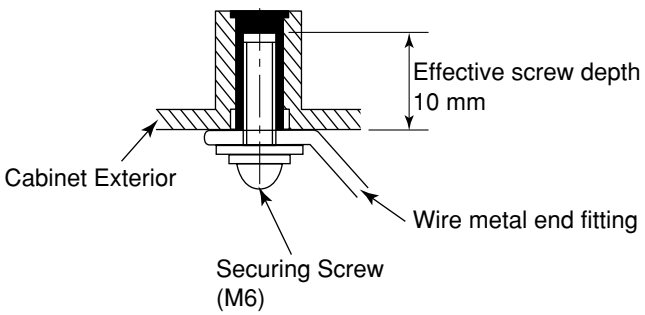

* If for any reason the enclosed screw become lost or misplaced, please use the following.
  Screw diameter: M6, Length:10 mm (the effective thread depth on the receiving side is 10 mm)
* Likewise if the screws for attaching the custom ceiling mount bracket go missing, please use the following.
  Screw diameter: M6, Length:10 mm (the effective thread depth on the receiving side is 10 mm)
  Torque Loading: 4±0.5 Nm (for 6 mm screw)

Before asking for service --- check the following points.

Symptoms	Checks
Power does not turn on	• Is the power cord plug correctly plugged in? • Is the MAIN POWER turned on? • Is electricity running to the power outlet? • Is the temperature monitor (TEMP) indicator on the front of the unit flashing or turned on? (See page 53) • Is the lamp monitor (LAMP) indicator on the front of the unit flashing or turned on? (See page 53) • Is the lamp unit door installed correctly? • A wrong ID is set. (See pages 15 and 36)
No image	• Is the lens cap still on the lens? • Is the image input correctly connected? • Is the input mode set correctly? (See page 22) • Is the black level adjustment set at the minimum level? (See page 28) • Is the equipment connected to the projector operating correctly? • Is the shutter function turned on? (See page 25)
Image is blurred	• Is the lens focused properly? (See page 24) • Is the projection distance correct? (See pages 17 to 18) • Is the lens dirty? • Is the projector positioned directly in front of the screen? (See page 16)
Light colour/ bad colour tone	• Is the colour density and colour tone setting correct? (See page 28) • Is the equipment connected to the projector correctly adjusted?
Remote control does not operate	• Are the batteries exhausted? • Are the battery polarities set correctly? (See page 14) • Are there any obstacles between the remote control and the remote control sensor? (See page 14) • Are you trying to operate the remote control beyond its operable range? (See page 14) • Are you controlling from external equipment using the REMOTE2 IN terminal? (See page 52) • Is there any external light interfering with remote control operation? • A wrong ID is set. (See pages 15 and 36) • Is the on-screen display function at “OFF”? (See page 9)
Abnormal image	• Is the input mode properly set? (See page 22) • Is the correct signal system (SYSTEM SELECTOR) selected? (See page 29) • Are there any malfunctions on the source side, such as bad video tapes? • Are you inputting a signal that is not compatible with this projector? (See page 61)
Does not display images from PCs	• Is the cable too long? • Is the video output signal setting of the computer correctly set? (Read the operating instructions of the your PC.)

Specifications

Model No.	PT-D5700E	PT-D5700EL	PT-DW5100E	PT-DW5100EL
Power supply	AC 220 - 240 V, 50 Hz/60 Hz			
Power consumption	750 W (about 15 W in standby without fan running)			
Amps	4 A			
DLP™ panel **Panel size**	0.7 inch (aspect ratio 4:3)		0.65 inch (aspect ratio 15:9)	
Display system	DLP™ chip x 1, DLP™ type			
Number of pixels	786 432 pixels (1 024 x 768 dots)		983 040 pixels (1 280 x 768 dots)	
Lens **Powered zoom** **Powered focus control**	1 to 1.32 F=1.7 to 2.0 f=25.6 mm to 33.8 mm	Option	1 to 1.32 F=1.7 to 2.0 f=25.6 mm to 33.8 mm	Option
Projection lamp	2 bulbs x 275 W UHM lamp			
Optical output	6 000 lm*1		5 500 lm*1	
Applicable scanning frequency **For Video signal (S-Video included)**	Horizontally 15.73 kHz/15.63 kHz, vertically 59.94 Hz/50 Hz			
For RGB signal	Horizontally 15 kHz – 91 kHz, vertically 50 Hz – 85 Hz, Panasonic Intelligent Auto Scanning (PIAS) system Dot clock frequency less than 150 MHz			
For DVI-D signal	Compliant with HDCP*2 480p, 576p, 1080/60i, 1080/50i, 720/60p, 720/50p, 1080/60p, 1080/50p VGA60, SVGA60, XGA50, XGA60, XGA70, XGA75, XGA85, XGA89, WXGA768/50, WXGA768/60, SXGA60			
For YPBPR signal	[480i], horizontally 15.73 kHz, vertically 59.94 Hz [480p], horizontally 31.5 kHz, vertically 59.94 Hz [576i], horizontally 15.63 kHz, vertically 50 Hz [576p], horizontally 31.25 kHz, vertically 50 Hz [720/60p], horizontally 45 kHz, vertically 60 Hz [720/50p], horizontally 37.5 kHz, vertically 50 Hz [1080/60p], horizontally 67.5 kHz, vertically 60 Hz [1080/50p], horizontally 56.25 kHz, vertically 50 Hz [1035/60i], horizontally 33.75 kHz, vertically 60 Hz [1080/60i], horizontally 33.75 kHz, vertically 60 Hz [1080/50i], horizontally 28.13 kHz, vertically 50 Hz • HD/SYNC, VD terminals are not compliant with 3 value composite SYNC.			
Colour system	7 standards (NTSC/NTSC4.43/PAL/PAL-N/PAL-M/SECAM/PAL60)			
Screen size	50 inch – 600 inch*3			
Screen aspect ratio	4:3		15:9	
Projection scheme	Menu-selectable from front/rear/ceiling mount, and floor standing			
Contrast ratio	2 000:1 (when “HIGH” is selected as the “CONTRAST MODE” setting)			
Interface ports **RGB1 input terminal**	1 set, BNC x 5 [For YPBPR input] Y: 1.0 V[p-p] synchronization signal included, PBPR: 0.7 V[p-p] 75 Ω [For RGB input] 0.7 V[p-p] 75 Ω For G-SYNC: 1.0 V[p-p] 75 Ω HD/SYNC: TTL, high-impedance, positive/negative polarity automatically adjusted VD: TTL, high-impedance, positive/negative polarity automatically adjusted • HD/SYNC, VD terminals are not compliant with 3 value composite SYNC.			

*1 These values are for the lens provided with the PT-D5700E/PT-DW5100E.
Note that these values change according to the lens used.
*2 HDCP (High-bandwidth Digital Content Protection)
HDCP is a digital video signal encryption system developed with the aim of protecting digital content.
*3 When using ET-DLE050 lens, the maximum screen size is 200 inch.

ENGLISH

Specifications

Model No.	PT-D5700E	PT-D5700EL	PT-DW5100E	PT-DW5100EL
Interface ports				
RGB2 input terminal	1 set of high-density, D-Sub 15-pin (female) [For YPBPR input] Y: 1.0 V [p-p] synchronization signal included, PBPR: 0.7 V[p-p] 75 Ω [For RGB input] 0.7 V[p-p] 75 Ω For G-SYNC: 1.0 V[p-p] 75 Ω HD/SYNC: TTL, high-impedance, positive/negative polarity automatically adjusted VD: TTL, high-impedance, positive/negative polarity automatically adjusted • HD/SYNC, VD terminals are not compliant with 3 value composite SYNC.			
Video input terminal	1 set BNC 1.0 V[p-p] 75 Ω			
S-Video input terminal	1 set Mini DIN 4-pin Y 1.0 V[p-p] C 0.286 V[p-p] 75 Ω Compliant with S1 signals			
Serial input/output terminal	1 set each for D-Sub 9-pin (male/female), RS-232C compliant Used for personal computer control			
Remote1 input/output terminal	1 set each for M3 stereo mini jack Wired remote control, used for link control			
Remote2 input terminal	1 set D-Sub 9-pin (female) Used for external control			
DVI-D input terminal	1 set DVI-D 24-pin Single link, compatible with HDCP			
LAN terminal	1 set RJ-45 Compliant with PJLink™			
Length of power cord	3.0 m			
Cabinet	Molded resin			
Outside dimensions	Width: 530 mm; Height : 167 mm; Depth: 425 mm			
Mass	13.9 kg	13.1 kg	13.9 kg	13.1 kg
Working environment condition	Ambient temperature*4 : 0 °C to 45 °C Ambient humidity : 20 % to 80 % (no condensation)			
Remote control				
Power source	3 V DC (two AA dry cells)			
Operation range	approx. 30 m (in front of beam receiver)			
Mass	134 g (including dry cells)			
Outside dimensions	Width: 51 mm, Thickness: 23 mm, Depth: 176 mm			
Option				
Hanging attachment (For high ceiling)	ET-PKD56H			
Hanging attachment (For low ceiling)	ET-PKD55S			
Projection lens	PT-D5700E/PT-D5700EL ET-DLE100, ET-DLE200, ET-DLE300, ET-DLE400, ET-DLE050 PT-DW5100E/PT-DW5100EL ET-DLE100, ET-DLE200, ET-DLE310, ET-DLE410, ET-DLE050			
Replacement lamp unit	ET-LAD57 (single bulb), ET-LAD57W (double bulbs)			

• The outside dimensions do not include the lens and other protruding parts. See page 62 for further details.

*4 When using the projector at high altitudes (1 400 to 2 700 m), the upper limit for the ambient temperature drops by 5 °C.

Compatible Signal List

Display mode		Resolution (as a number of dots)*1	Scanning frequency Horizontal (kHz)	Scanning frequency Vertical (Hz)	Dot clock frequency (MHz)	Image quality*2	Format
NTSC/NTSC4.43/ PAL-M/PAL60		720 x 480i	15.7	59.9		A	VIDEO/S-VIDEO
PAL/PAL-N/SECAM		720 x 576i	15.6	50.0		A	VIDEO/S-VIDEO
480i		720 x 480i	15.7	59.9	13.5	A	YPBPR/RGB
576i		720 x 576i	15.6	50.0	13.5	A	YPBPR/RGB
480p		720 x 483	31.5	59.9	27.0	A	YPBPR/RGB/DVI
576p		720 x 576	31.3	50.0	27.0	A	YPBPR/RGB/DVI
1080/60p		1 920 x 1 080	67.5	60.0	148.5	A	YPBPR/RGB/DVI
1080/50p		1 920 x 1 080	56.3	50.0	148.5	A	YPBPR/RGB/DVI
1080/60i		1 920 x 1 080i	33.8	60.0	74.3	A	YPBPR/RGB/DVI
1080/50i		1 920 x 1 080i	28.1	50.0	74.3	A	YPBPR/RGB/DVI
720/60p		1 280 x 720	45.0	60.0	74.3	A	YPBPR/RGB/DVI
720/50p		1 280 x 720	37.5	50.0	74.3	A	YPBPR/RGB/DVI
VGA400		640 x 400	31.5	70.1	25.2	A	RGB
		640 x 400	37.9	85.1	31.5	A	RGB
VGA480	*3	640 x 480	31.5	59.9	25.2	A	RGB/DVI
		640 x 480	35.0	66.7	30.2	A	RGB
		640 x 480	37.9	72.8	31.5	A	RGB
		640 x 480	37.5	75.0	31.5	A	RGB
		640 x 480	43.3	85.0	36.0	A	RGB
SVGA		800 x 600	35.2	56.3	36.0	A	RGB
	*3	800 x 600	37.9	60.3	40.0	A	RGB/DVI
		800 x 600	48.1	72.1	50.0	A	RGB
		800 x 600	46.9	75.0	49.5	A	RGB
		800 x 600	53.7	85.1	56.3	A	RGB
MAC16		832 x 624	49.7	74.6	57.3	A	RGB
XGA	*3	1 024 x 768	39.6	50.0	51.9	AA	RGB/DVI
	*3	1 024 x 768	48.4	60.0	65.0	AA	RGB/DVI
		1 024 x 768	56.5	70.1	75.0	AA	RGB/DVI
		1 024 x 768	60.0	75.0	78.8	AA	RGB/DVI
		1 024 x 768	68.7	85.0	94.5	AA	RGB/DVI
		1 024 x 768i	35.5	87.0	44.9	AA	RGB
MXGA		1 152 x 864	64.0	71.2	94.2	A	RGB
		1 152 x 864	67.5	74.9	108.0	A	RGB
		1 152 x 864	76.7	85.0	121.5	A	RGB
WXGA	*3	1 280 x 800	41.3	50.0	68.6	A	RGB
	*3	1 280 x 800	49.7	59.8	83.5	A	RGB
	*3	1 280 x 768	39.6	50.0	65.2	AA*4	RGB/DVI
	*3	1 280 x 768	47.7	60.0	80.1	AA*4	RGB/DVI
MAC21		1 152 x 870	68.7	75.1	100.0	A	RGB
MSXGA	*3	1 280 x 960	60.0	60.0	108.0	A	RGB
SXGA	*3	1 280 x 1 024	64.0	60.0	108.0	A	RGB/DVI
		1 280 x 1 024	80.0	75.0	135.0	A	RGB
		1 280 x 1 024	91.1	85.0	157.5	B	RGB
	*3	1 400 x 1 050	64.0	60.0	108.0	A	RGB/DVI
UXGA	*3	1 600 x 1 200	75.0	60.0	162.0	B	RGB

*1 Character "i" that follows the number of displayed dots stands for interlace signal.
*2 The symbols used to denote the image quality have the following significance:
AA = the images are projected at the highest quality (With XGA for the PT-D5700E/PT-D5700EL; with XGA/WXGA 1 280 x 768 for the PT-DW5100E/PT-DW5100EL); A = the images are converted by the image processing circuit and projected; B = the amount of data is scaled down and simplified images are projected.
*3 These signals support the frame lock function.
*4 The PT-D5700E and PT-D5700EL provide "A" image quality.

Note
- The number of display dots are 1 024 x 768 for PT-D5700E/PT-D5700EL, and 1 280 x 768 for PT-DW5100E/PT-DW5100EL. If signals with a number of display dots differing from the data listed above are supplied, they will be converted into signals with 1 024 x 768 dots and displayed for PT-D5700E/PT-D5700EL, and 1 280 x 768 for PT-DW5100E/PT-DW5100EL.

ENGLISH

Dimensions

unit : mm

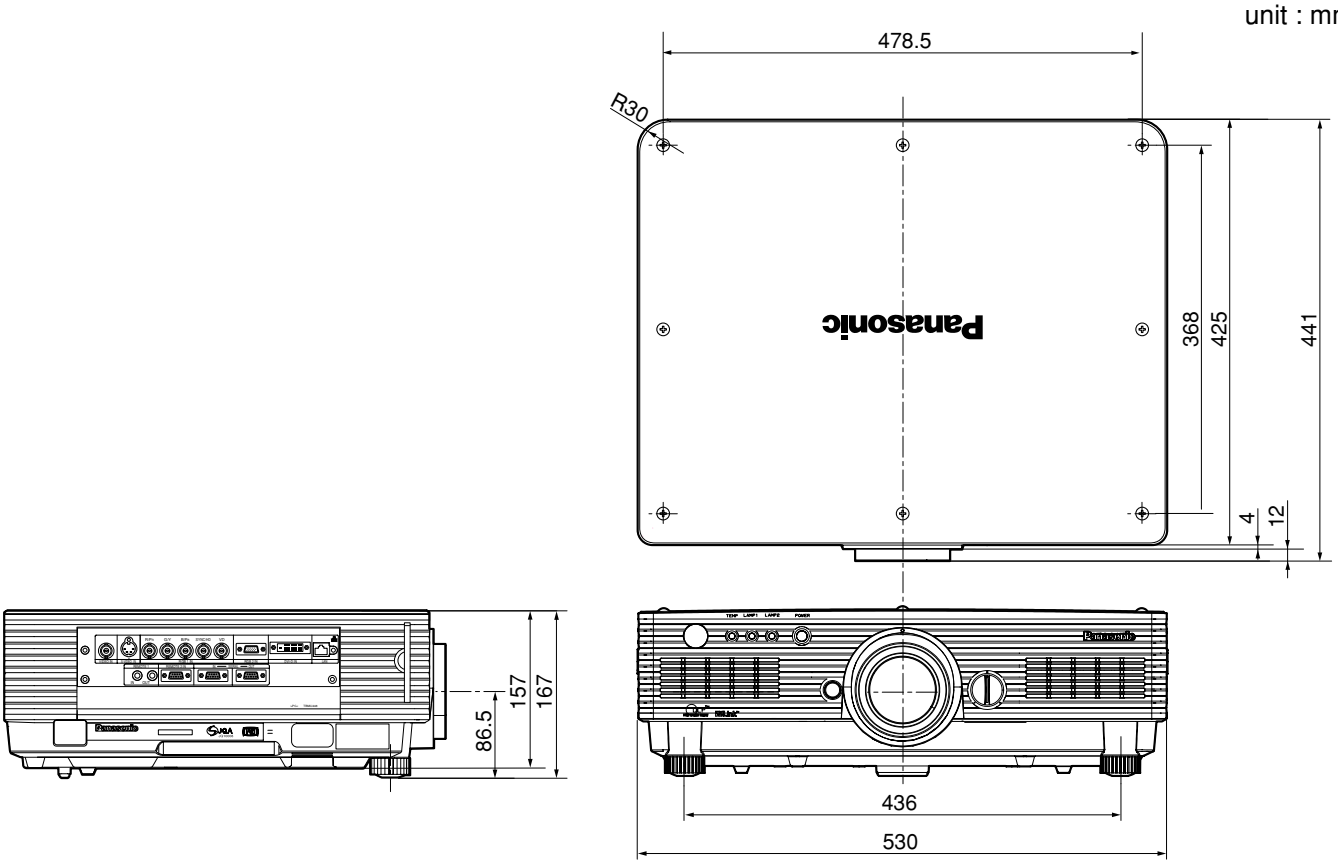

Installation dimensions diagram

(Figure 1 : Dimensions applying when one unit is used)

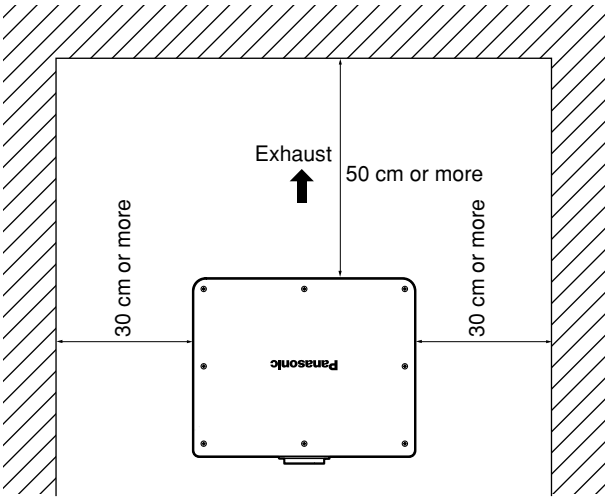

(Figure 2 : Dimensions applying when two units are used)

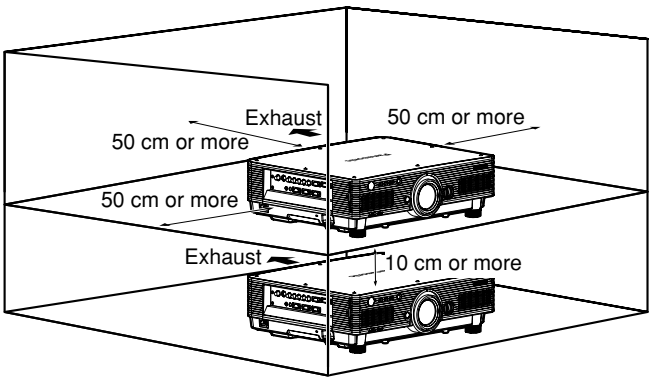

Attention

- Leave a clearance of at least 50 cm so that the ventilation opening on the rear panel will not be blocked.
- Be careful not to retain exhausted air on the back side of the main unit. Also take steps to ensure that the hot air blown out from the air exhaust outlet will not be sucked into the air intake.
- Install with clearances of at least 30 cm provided for the side panels to enable the air filter to be removed and re-installed.
- When operating the projector in an enclosure, ensure that the temperature of the surrounding air within the enclosure remains within the range 0 °C to 40 °C while the projector is running. Also ensure that the air intake and exhaust vents are unobstructed. Even when the surrounding air temperature is maintained below 40 °C, operation of the protection circuit could cause a shutdown due to hot exhaust air being trapped inside the projector. When designing the enclosure, please give due consideration to the thermal environment surrounding the projector (Figure 2).

Information on Disposal for Users of Waste Electrical & Electronic Equipment (private households)

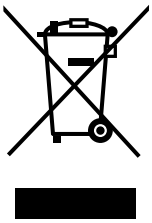

This symbol on the products and/or accompanying documents means that used electrical and electronic products should not be mixed with general household waste.
For proper treatment, recovery and recycling, please take these products to designated collection points, where they will be accepted on a free of charge basis. Alternatively, in some countries you may be able to return your products to your local retailer upon the purchase of an equivalent new product.
Disposing of this product correctly will help to save valuable resources and prevent any potential negative effects on human health and the environment which could otherwise arise from inappropriate waste handling. Please contact your local authority for further details of your nearest designated collection point.
Penalties may be applicable for incorrect disposal of this waste, in accordance with national legislation.

For business users in the European Union

If you wish to discard electrical and electronic equipment, please contact your dealer or supplier for further information.

Information on Disposal in other Countries outside the European Union

This symbol is only valid in the European Union.
If you wish to discard this product, please contact your local authorities or dealer and ask for the correct method of disposal.

Note:

Purchase of this equipment includes the rights to use this software (the built-in microcomputer and information recorded on ROMs) but does not grant copyrights. Do not reverse engineer, change or modify the software. The guarantee will not be valid for any malfunctions caused by such actions.

Trademark Acknowledgement

- VGA and XGA are trademarks of International Business Machines Corporation.
- S-VGA is a registered trademark of the Video Electronics Standards Association.
- “Microsoft Windows” is a registered trademark of the Microsoft Corporation (U.S.A.) in the U.S. and other countries.
- “Netscape” and “Netscape Navigator” are registered trademarks of the Netscape Communications Corporation in the U.S. and other countries.
- Digital Light Processing, DLP, and DLP™ CHIP are registered trademarks of the Texas Instruments.
- PJLink™ is the applied-for trademark or a registered trademark in Japan, USA, and in other countries and regions.
- HDMI and High-Definition Multimedia Interface are the trademarks or registered trademarks of HDMI Licensing LLC.

All other trademarks are the property of the various trademark owners.

Matsushita Electric Industrial Co., Ltd
Web Site : http://panasonic.net
© 2007 Matsushita Electric Industrial Co., Ltd. All Rights Reserved.
M0507-3077