myprojectorlamps.com

The most trusted, dependable name in projector lamp sales.

http://www.myprojectorlamps.com

http://www.myprojectorlamps.ca

http://www.myprojectorlamps.eu

The following projector manual has not been modified or altered in any way.

Table of Contents

Table of Contents **1**

Usage Notice **3**

Introduction **6**

Packing Checklist *6*
Views of Projector *7*
Remote Control *13*
Remote Control Operating Range *15*
Projector and Remote Control Buttons *15*
Inserting the Remote Control Batteries *16*

Setup and Operation **17**

Connecting Input Devices *17*
Starting and Shutting down the Projector *19*
Setting an Access Password (Security Lock) *21*
Adjusting the Projector Level *23*
Adjusting the Zoom, Focus and Keystone *24*
Adjusting the Volume *24*
OSD Menu Controls *25*
Setting the OSD Language *26*

Menu Setting **27**

OSD Menu Overview *27*
Image Menu *28*
Display Menu *30*
Setup Menu *32*
Color setting Menu *35*
Language Menu *36*
Management Menu *37*

Appendices **39**

Replacing the Projection Lamp *39*
Resetting the Lamp *42*
Cleaning the Projector *43*
Using the Kensington® Lock *43*
Common problems and solutions *44*
Tips for Troubleshooting *44*

LED Error Messages *45*
Image Problems *46*
Lamp Problems *46*
Remote Control Problems *47*
Audio Problems *47*
Having the Projector Serviced *48*

Specifications **49**

Projection Distance V.S. Projection Size *49*
Timing Mode Table *50*
Projector Dimensions *51*
Projector Dimensions *51*

Regulatory Compliance **52**

FCC Warning *52*
Canada *52*
Safety Certifications *52*
EN 55022 Warning *52*
RoHS Compliant *52*

Congratulations and thank you for choosing an Optoma DLP projector.

Important:
It is strongly recommended that you read this section carefully before using the projector. These safety and usage instructions will ensure that you enjoy many years of safe use of the projector. Keep this manual for future reference.

Precautions

Warning symbols are used on the unit and in this manual to alert you of hazardous situations.

The following styles are used in this manual to alert you to important information.

Note:
Provides additional information on the topic at hand.

Important:
Provides additional information that should not be overlooked.

Caution:
Alerts you to situations that may damage the unit.

Warning:
Alerts you to situations that may damage the unit, create a hazardous environment, or cause personal injury.

Throughout this manual, component parts and items in the OSD menus are denoted in bold font as in this example:
"Push the **Menu** button on the remote control to open the Main menu."

Remote Control

Some remote controls have a laser for pointing out items on a screen.
DANGER: Do not point the laser in the eyes. Doing so can damage the eyes permanently.

General Safety Information

- Do not open the unit case. Aside from the projection lamp, there are no user-serviceable parts in the unit. For servicing, contact qualified service personnel.
- Follow all warnings and cautions in this manual and on the unit case.
- The projection lamp is extremely bright by design. To avoid damage to eyes, do not look into the lens when the lamp is on.
- Do not place the unit on an unstable surface, cart, or stand.
- Avoid using the system near water, in direct sunlight, or near a heating device.
- Do not place heavy objects such as books or bags on the unit.

Power Safety

- Only use the supplied power cord.
- Do not place anything on the power cord. Place the power cord where it will not be in the way of foot traffic.
- Remove the batteries from the remote control when storing or not in use for a prolonged period.

Replacing the Lamp

Replacing the lamp can be hazardous if done incorrectly. Refer to “Replacing the Projection Lamp” on page 39 for clear and safe instructions for this procedure. Before replacing the lamp:

- Unplug the power cord.
- Allow the lamp to cool for about one hour.

Important Recycle Instructions:

Hg Lamp(s) inside this product contain mercury. This product may contain other electronic waste that can be hazardous if not disposed of properly. Recycle or dispose in accordance with local, state, or federal Laws. For more information, contact the Electronic Industries Alliance at WWW.EIAE.ORG. For lamp specific disposal information check WWW.LAMPRECYCLE.ORG.

Cleaning the Projector

- Unplug the power cord before cleaning. Refer to “Cleaning the Projector” on page 43.
- Allow the lamp to cool for about one hour.

Regulatory Warnings

Before installing and using the projector, read the regulatory notices in the “Regulatory Compliance” section on page 52.

Main Features

- *Lightweight unit, easy to pack away and transport*
- *Compatible with all major video standards including NTSC, PAL, and SECAM*
- *A high brightness rating allows for presentations in daylight or in lit rooms*
- *Supports resolutions up to SXGA at 16.7 million colors to deliver crisp, clear images*
- *Flexible setup allows for front and rear projections*
- *Line-of-vision projections remain square, with advanced keystone correction for angled projections*
- *Input source automatically detected*

About this manual

This manual is intended for end users and describes how to install and operate the DLP projector. Wherever possible, relevant information—such as an illustration and its description—has been kept on one page. This printer-friendly format is both for your convenience and to help save paper, thereby protecting the environment. It is suggested that you only print sections that are relevant to your needs.

Packing Checklist

Carefully unpack the projector and check that the following items are included:

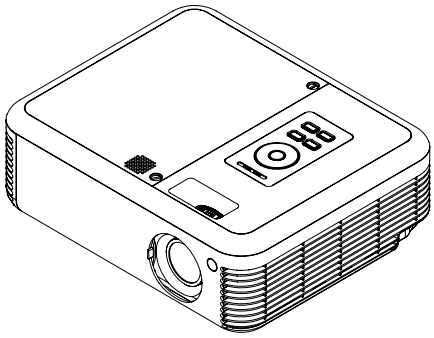

DLP PROJECTOR

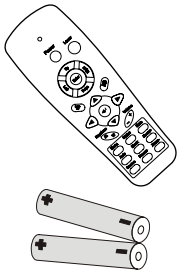

REMOTE CONTROL
(WITH TWO AAA BATTERIES)

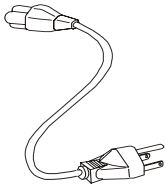

POWER CORD

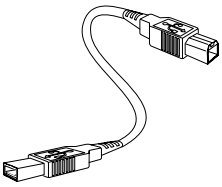

USB CABLE
(USB TYPE A TO B USB)

VIDEO CABLE
(RCA X 1TO RCA X 1)

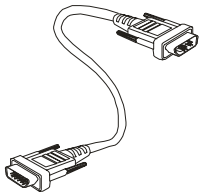

COMPUTER CABLE
(DB15 - DB15)

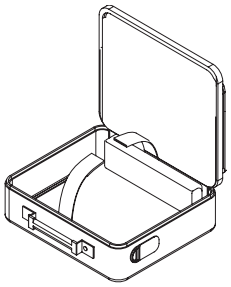

CARRYING CASE

Documents:

- ☑ User's Guide
- ☑ Quick Start Card
- ☑ Warranty Card

Contact your dealer immediately if any items are missing, appear damaged, or if the unit does not work.

Caution:
Avoid using the projector in dusty environments.

Views of Projector

Front-right View

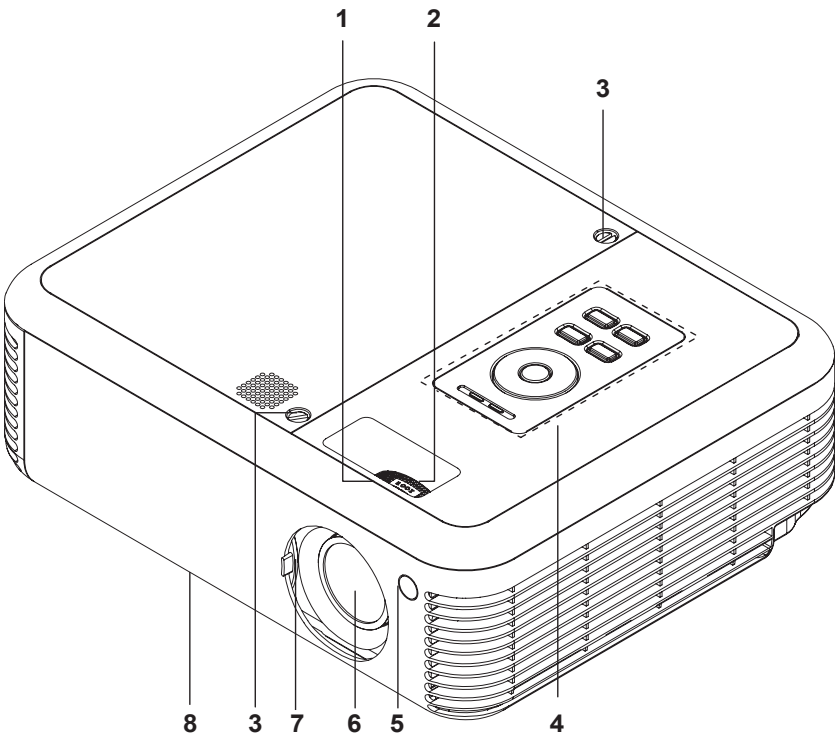

ITEM	LABEL	DESCRIPTION	SEE PAGE:
1.	Focus	Focuses the projected image	***24***
2.	Lens zoom	Enlarges the projected image	***24***
3.	Screws	Holds lamp to projector	
4.	See “Top view—OSD buttons and LEDs”		***8***
5.	IR receiver	Receiver for IR signal from remote control	***15***
6.	Lens	Remove lens cap before use	
7.	Lens cover	Slide across to protect lens when not in use	
8.	Height-adjuster but-ton	Push to release height adjuster	***23***

Important:
Ventilation openings on the projector allow for good air circulation, which keeps the projector lamp cool. Do not obstruct any of the ventilation openings.

Top view—On-screen Display (OSD) buttons and LEDs

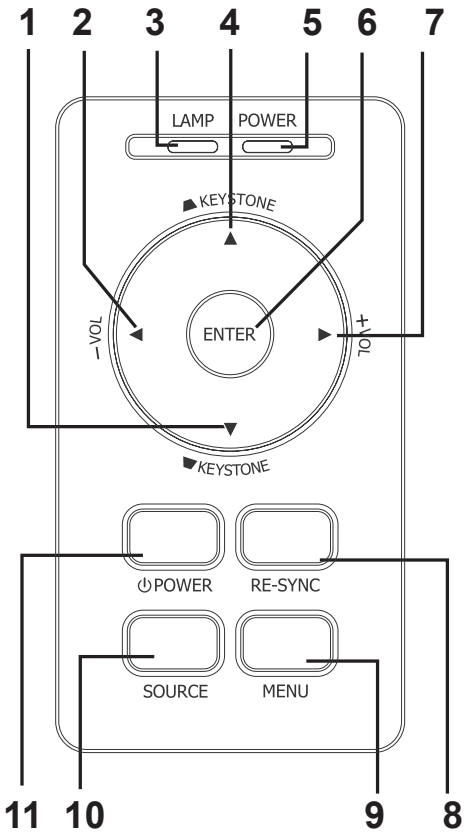

ITEM	LABEL	DESCRIPTION		SEE PAGE:
1.	Keystone/ Down cursor	Corrects image-trapezoid (wider bottom) effect Navigates and changes settings in the OSD		*24*
2.	VOL-/ Left cursor	Decreases volume Navigates and changes settings in the OSD		*24*
3.	Lamp LED	Orange	Lamp ready—you can safely turn on or off the projector	
		Flashing	Lamp not ready—do not press the power button	
4.	Keystone/ UP cursor	Corrects image-trapezoid (wider top) effect Navigates and changes settings in the OSD		
5.	Power LED	Green	Unit is powered on and working correctly	
		Off	Unit is powered off	
		Flashing	Operational error code (Refer to “LED Error Messages” on page 45)	

ITEM	LABEL	DESCRIPTION	SEE PAGE:
6.	RE-SYNC	Optimizes image size, position, and resolution	***19***
7.	Menu	Opens and exits the OSD	***25***
8.	Source	Detects the input device	***19***
9.	Power	Turns the projector on or off	

Rear view

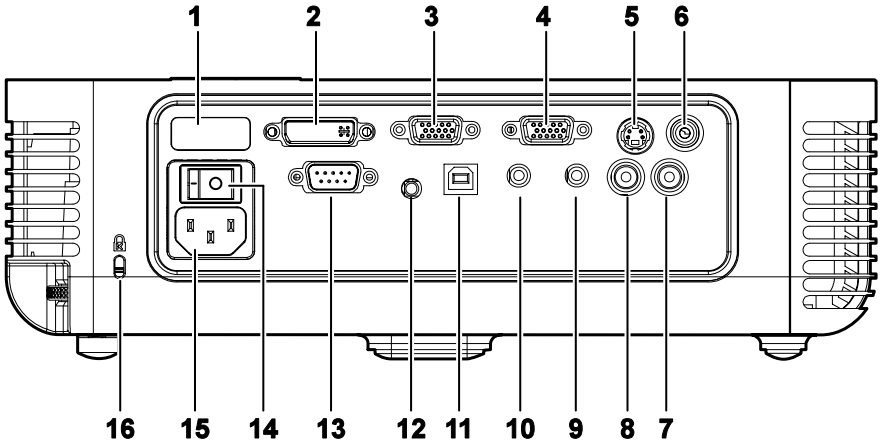

ITEM	LABEL	DESCRIPTION	SEE PAGE:
1.	Rear IR Receiver	Receiver for IR signal from remote control.	*17*
2.	DVI-D	Connect the computer cable from a computer. Both DVI-I and DVI-D are supported.	
3.	VGA IN	Connect a VGA cable (supplied) from a computer	
4.	VGA OUT	Connect to a monitor	
5.	S-video	Connect the composite or S-video cable (supplied) from a video device	
6.	Video	Connect a composite video cable (supplied) from a video device.	
7.	Audio in-R	Connect the audio cable (not supplied) from an audio input device.	
8.	Audio in-L	Connect the audio cable (not supplied) from an audio input device.	
9.	Audio-in	Connect an audio cable (not supplied) from the computer's audio-out connector.	
10.	Audio-out	Audio loop-through	
11.	USB	Connect the USB cable (supplied) from a computer	
12.	12V Connector	Connect the 12V power outlet	
13.	RS-232	Installation control	

ITEM	LABEL	DESCRIPTION	SEE PAGE:
14.	Power switch	Turns the power on and off	***43***
15.	Power	Connect the supplied power cord	***43***
16.	Security Lock	Secure to permanent object with a Kensington® Lock system	

Note:
If your video equipment has both S-video and RCA jacks (composite video) connect to the S-video connector. S-video provides a better quality signal.

Bottom view

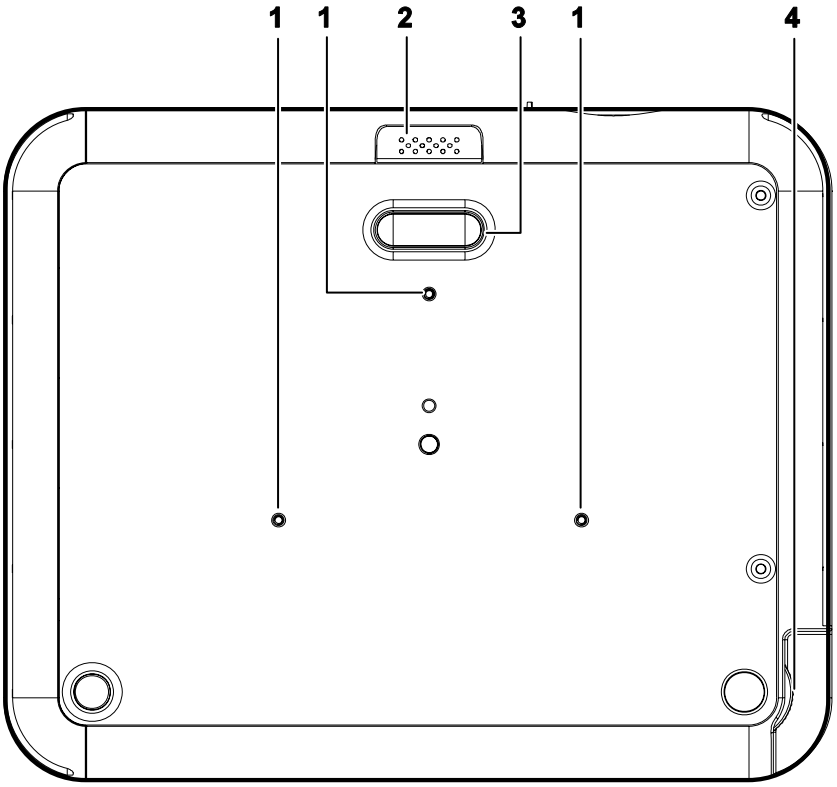

ITEM	LABEL	DESCRIPTION	SEE PAGE:
1.	Ceiling support holes.	Contact your dealer for information on mounting your projector on the ceiling.	
2.	Height adjuster button	Push to release height adjuster	***23***
3.	Height adjuster	Adjuster drops down when adjuster button is pushed	
4.	Tilt adjuster	Adjust angle of the picture	***23***

Note:
For ceiling installations, use approved mounting hardware and M3 screws with a maximum screw depth of 8 mm (0.31 inch).

Remote Control

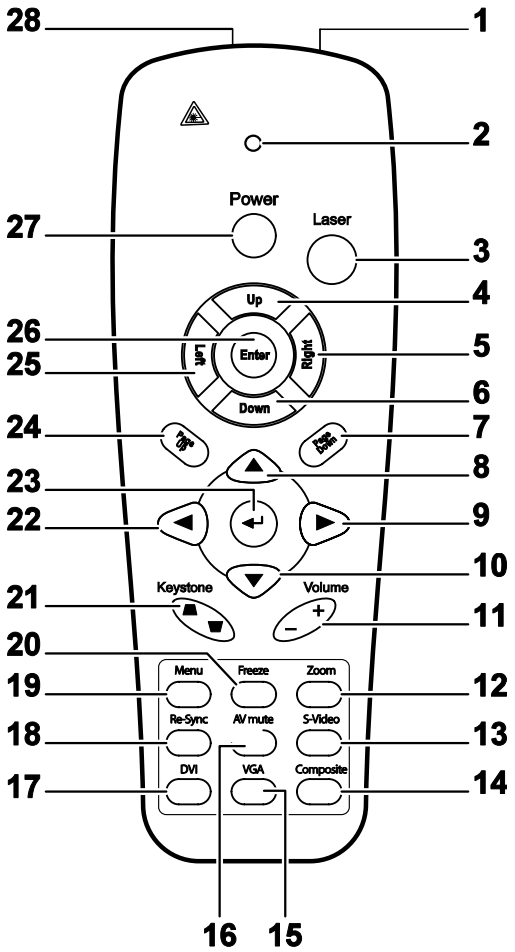

Important:
1. *Avoid using the projector with bright fluorescent lighting turned on. Certain high-frequency fluorescent lights can disrupt remote control operation.*

2. *Be sure nothing obstructs the path between the remote control and the projector. If the path between the remote control and the projector is obstructed, you can bounce the signal off certain reflective surfaces such as projector screens.*

3. *The buttons and keys on the projector have the same functions as the corresponding buttons on the remote control. This user's manual describes the functions based on the remote control.*

ITEM	LABEL	DESCRIPTION	SEE PAGE:
1.	IR transmitter	Transmits signals to projector	
2.	Status LED	Lights when the remote control is used	

ITEM	LABEL	DESCRIPTION	SEE PAGE:
3.	Laser	Press to operate the on-screen pointer	
4.	Up	Up arrow when connected through USB to a PC	
5.	Right	Right arrow when connected through USB to a PC	
6.	Down	Down arrow when connected through USB to a PC	
7.	Page Down	Page down when connected through USB to a PC	
8.	Up cursor	Navigates and changes settings in the OSD	
9.	Right cursor	Adjusts volume	
10.	Down cursor	Zoom in/out	***24***
11.	Volume +/-		
12.	Zoom		
13.	S-Video	Input source select S-Video	
14.	Composite	Input source select Composite	
15.	VGA	Input source select VGA	
16.	AV mute	Display blank & Audio mute	
17.	DVI	Input source select DVI	
18.	Re-Sync	Re-Sync VGA source, adjustment for phase, tracking, size, position	
19.	Menu	Opens the OSD	
20.	Freeze	Freeze/unfreezes the on-screen picture	
21.	Keystone top/bottom	Corrects image-trapezoid (wider top/bottom) effect	***24***
22.	Left cursor	Navigates and changes settings in the OSD	
23.	Enter	Changes settings in the OSD	***24***
24.	Page Up	Page up when connected through USB to a PC	***24***

ITEM	LABEL	DESCRIPTION	SEE PAGE:
25.	Left	Left arrow when connected through USB to a PC	
26.	Enter	Enter key when connected through USB to a PC	
27.	Power	Turns the projector on or off	
28.	Laser	Use as on-screen pointer. **DO NOT POINT IN EYES**.	

The remote control can only interface with a computer when connected to the computer through a USB cable connection. The computer cable connects a computer to the projector for display purposes only.

Remote Control Operating Range

The remote control uses infrared transmission to control the projector. It is not necessary to point the remote directly at the projector. Provided you are not holding the remote perpendicular to the sides or the rear of the projector, the remote will function well within a radius of about 10 meters (33 feet) and 30 degrees above or below the projector level.

Projector and Remote Control Buttons

The projector can be operated using the remote control or the buttons on the top of the projector. All operations can be carried out with the remote control; however the buttons on the projector are limited in use. The following illustration shows the corresponding buttons on the remote control and on the projector.

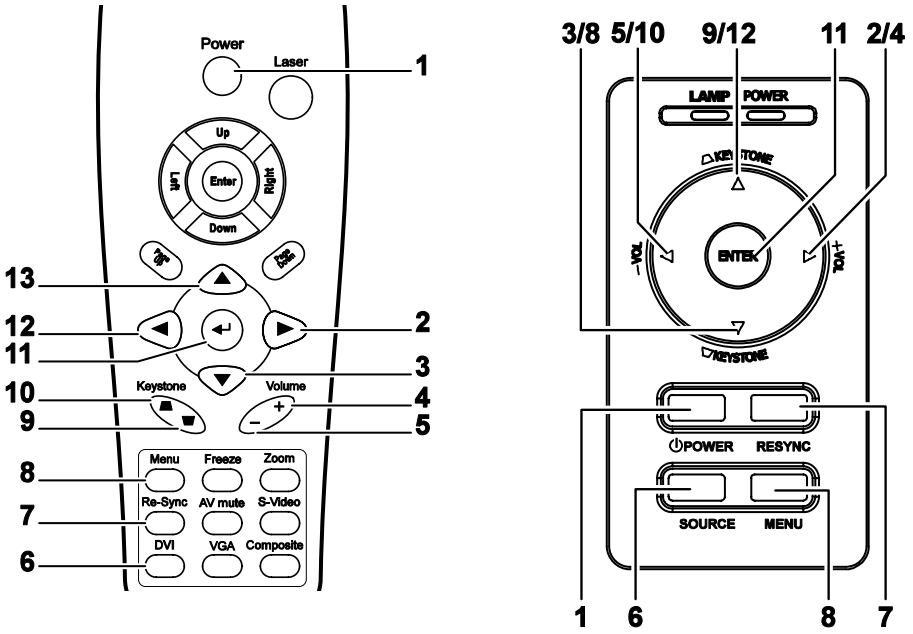

Some buttons on the projector have two functions. For example, item 9/12 on the projector functions both keystone button and as the up cursor key in OSD menus.

Inserting the Remote Control Batteries

1. Remove the battery compartment cover by sliding the cover in the direction of the arrow.

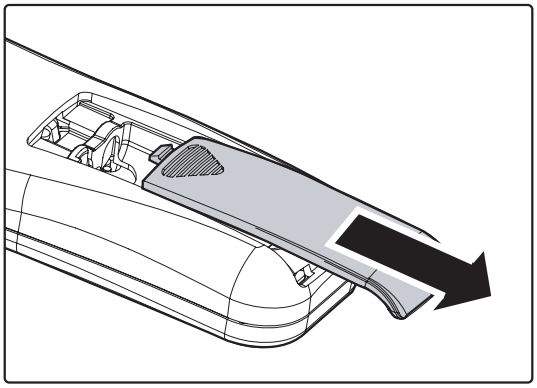

2. Insert the supplied batteries taking note of the polarity (+/-) as shown here.

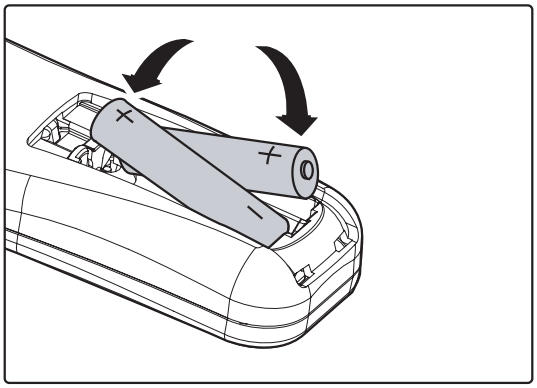

3. Replace the cover.

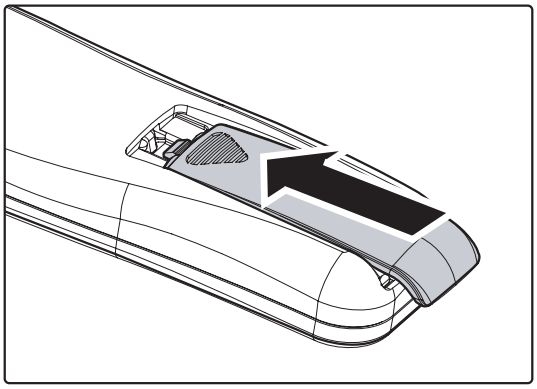

Caution:

1. *Only use AAA batteries.(Alkaline battery is better).*

2. *Dispose of used batteries according to local ordinance regulations.*

3. *Remove the batteries when not using the projector for prolonged periods.*

Connecting Input Devices

A PC or notebook computer as well as video devices can be connected to the projector at the same time. Video devices include DVD, VCD, and VHS players, as well as movie camcorders and digital still cameras. Check the user manual of the connecting device to confirm it has the appropriate output connector.

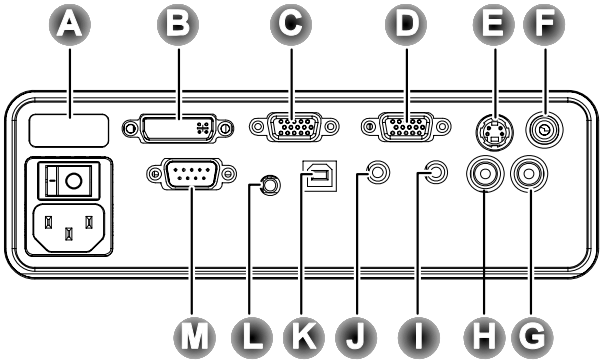

ITEM	LABEL	DESCRIPTION
A	Rear IR Receiver	Receiver for IR signal from remote control.
B	DVI-D	Connect the computer cable from a computer. Both DVI-I and DVI-D are supported.
C	VGA in	Connect a VGA cable (supplied) from a computer.
D	VGA out	Connect a VGA cable (supplied) to a monitor.
E	S-video	Connect the supplied S-video cable (not supplied) from a video device.
F	Video	Connect a composite video cable (supplied) from a video device.
G	Audio in-R	Connect the audio cable (not supplied) from an audio input device.
H	Audio in-L	Connect the audio cable (not supplied) from an audio input device.
I	Audio-in	Connect an audio cable (not supplied) from the computer's audio-out connector.
J	Audio-out	Audio loop-through

ITEM	LABEL	DESCRIPTION
K	USB	Connect the supplied USB cable from a computer for USB mouse function and firmware upgrades.
L	12V	Connect a 12-volt trigger cable from the screen to this connector. When connected, the screen automatically adjusts vertically to match the screen aspect ratio.
M	RS-232	Reserved for installation control.

Warning:
As a safety precaution, disconnect all power to the projector and connecting devices before making connections.

Starting and Shutting down the Projector

1. Slide the lens cover.

2. Connect the power cord to the projector **[A]** Connect the other end to a wall outlet. Switch **[B]** from off **(O)** to on **(—)**

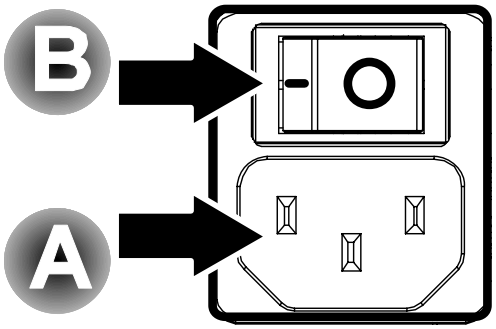

3. The POWER and LAMP LEDs on the projector turn on.
Turn on the connected devices.

4. Ensure the LAMP LED is on a steady (not flashing) orange and then press the Power button to turn on the projector.

The projector splash screen displays and connected devices are detected.
If the connected device is a PC, press the appropriate keys on the computer keyboard to switch the display output to the projector. (Check the user manual of the PC to determine the appropriate Fn key combination to change display output.)

See “Setting an Access Password (Security Lock)” on page 21 if Security Lock is enabled.

5. If more than one input device is connected, press the **Source** button repeatedly to switch among devices. (DVD and HDTV are supported through the VGA connector.)

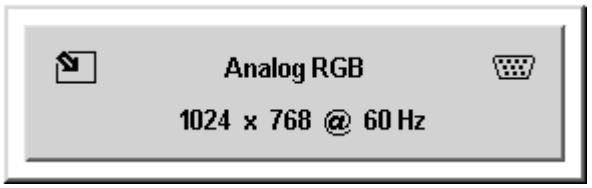

6. To turn off the projector, press the **Power** button. The projector prepares for shutdown and a “Wait a moment please…” message appears.

7. When the "**Power Off? / Press Power again**" message appears, press the **Power** button. The projector will turn off.

8. Turn off the main **Power** switch when the Lamp LED stops flashing.

Caution:
Do not unplug the power cord until the Ready LED stops flashing, indicating the projector has cooled down.

Setting an Access Password (Security Lock)

You can use the cursor (arrow) buttons to set a password and prevent unauthorized use of the projector. When enabled, the password must be entered after you power on the projector. (See *Navigating the OSD* on page 25 and *Setting the OSD Language* on page 26 for help on using OSD menus.)

> ***Important:***
> *Keep the password in a safe place. Without the password, you will not be able to use the projector. If you lose the password, contact your reseller for information on clearing the password.*

1. Press the **Menu** button to open the 1.OSD menu.

2. Press the cursor ◄ ► button to move to the Management menu.

3. Press the cursor ▲▼ button to select Security.

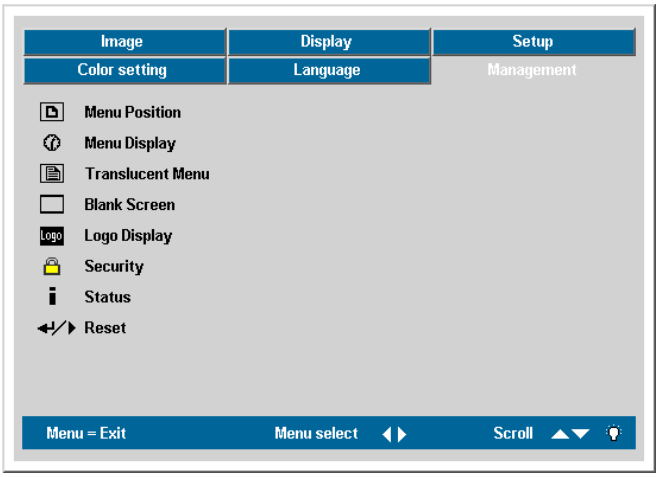

4. Press the cursor ◄ ► button to select Enable. (White text is selected.)
A password dialog box automatically appears.

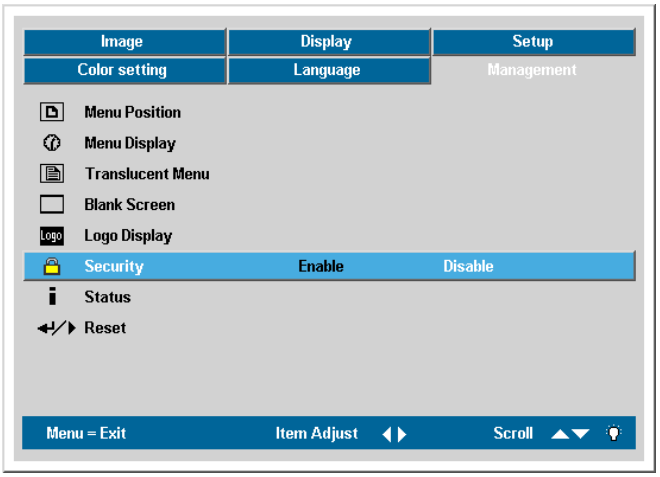

5. You can only use the following four cursor buttons: ▲ ▼ ◄ ►
in the password fields. You can use any combination including the same arrow five times, but not less than six. Press the cursor buttons in any order to set the password. When you confirm the password, OK appears.

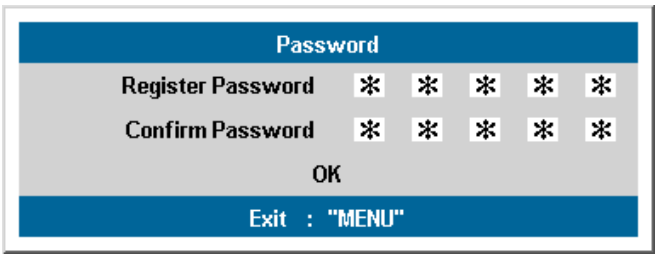

6. Every time you start the projector, a password dialog box appears.

Enter the password in the order you set it on step 5. (Press the Menu button to cancel if you enter the wrong password.)

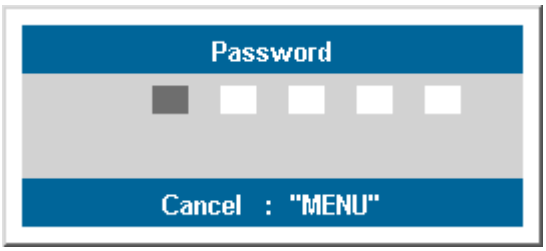

Adjusting the Projector Level

Take note of the following when setting up the projector:

- *The projector table or stand should be level and sturdy.*
- *Position the projector so that it is perpendicular to the screen.*
- *Be sure cables are not in the way or can cause the projector to be knocked over.*

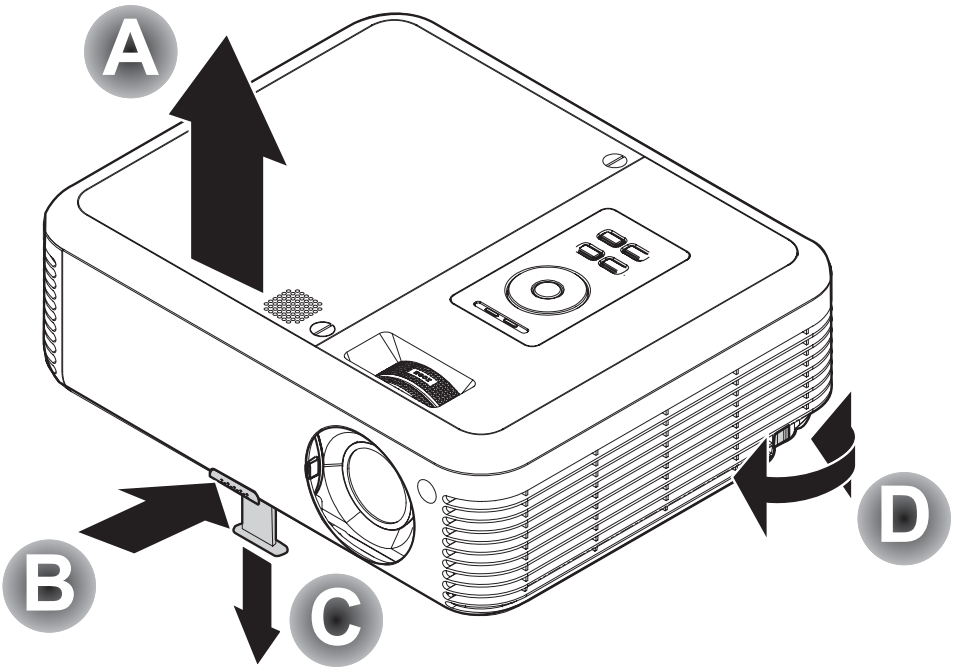

1. To raise the level of the projector, lift the projector **[A]** and press the height-adjuster button **[B]**.

The height adjuster drops down **[C]**.

2. To lower the level of the projector, press the height-adjuster button and push down on the top of the projector.

3. To adjust the angle of the picture, turn the tilt adjuster **[D]** right or left until desired angle has been achieved.

Adjusting the Zoom, Focus and Keystone

1. Use the **Image-zoom** control (on the projector only) to resize the projected image and screen size B.

2. Use the **Image-focus** control (on the projector only) to sharpen the projected image. A

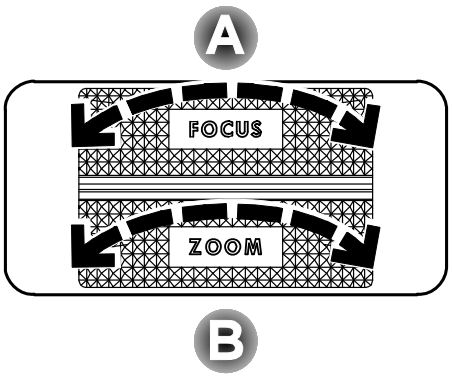

3. Press the **Keystone** button on the remote control.
The keystone control appears on the display.

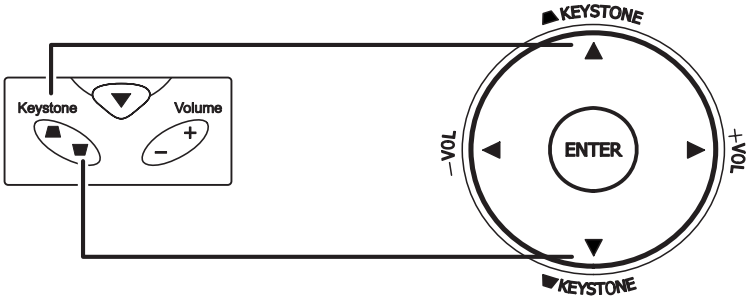

4. Use the **Keystone** button to correct image distortion.

Adjusting the Volume

1. Press the **Volume +/-** button on the remote control.
The volume control appears on the display.

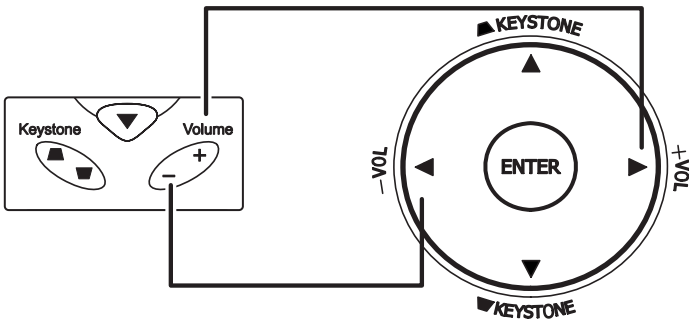

2. Use the **Volume +/-** button to adjust the level.

3. Press the **Mute** button to turn off the volume.

OSD Menu Controls

The projector has an OSD that lets you make image adjustments and change various settings.

Navigating the OSD

You can use the remote control cursor buttons or the buttons on the top of the projector to navigate and make changes to the OSD. The following illustration shows the corresponding buttons on the remote control and on the projector.

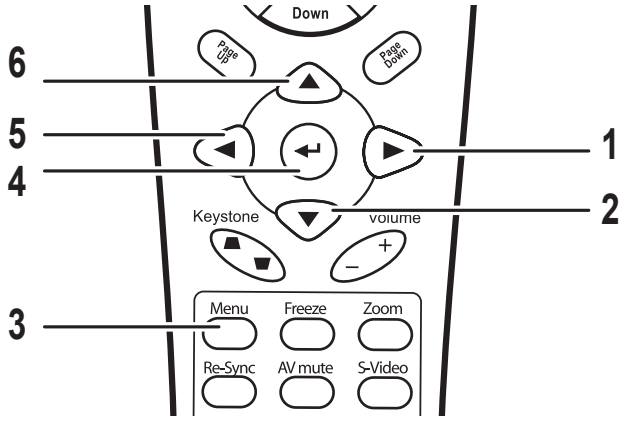

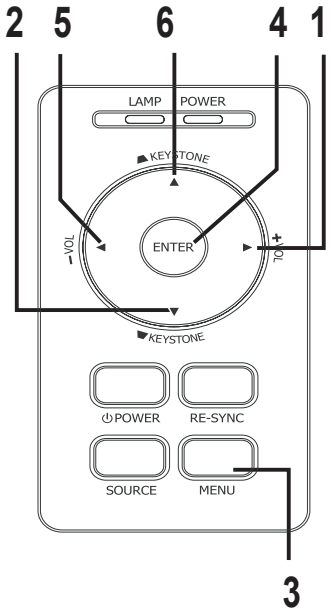

1. To open the OSD, press the **Menu** button.
2. There are six menus. Press the cursor ◄ ► button to move through the menus.
3. Press the cursor ▲▼ button to move up and down in a menu.
4. Press ◄ ► to change values for settings, and then press **Enter** or ► to confirm the new setting.
5. Press **Menu** to close the OSD or leave a submenu.

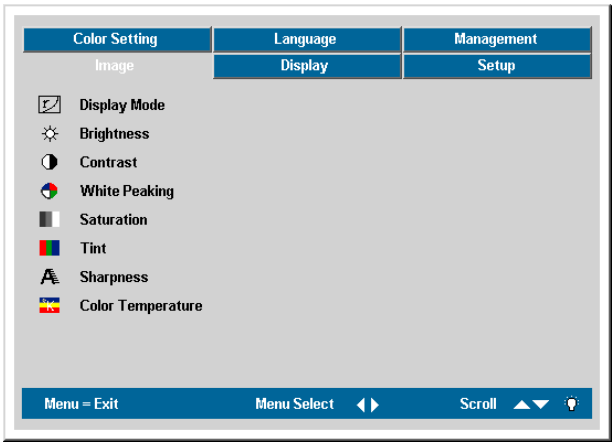

Note:
*Depending on the video source not all items in the OSD are available. For example, the **Horizontal/Vertical Position** items in the Setup menu can only be modified when connected to a PC. Items that are not available cannot be accessed and are grayed out.*

Setting the OSD Language

You may want to reference the OSD on your projector while reading this section. Set the OSD language to your preference before continuing. (The default language is English.)

1. Press the **Menu** button. The **Image** menu appears.

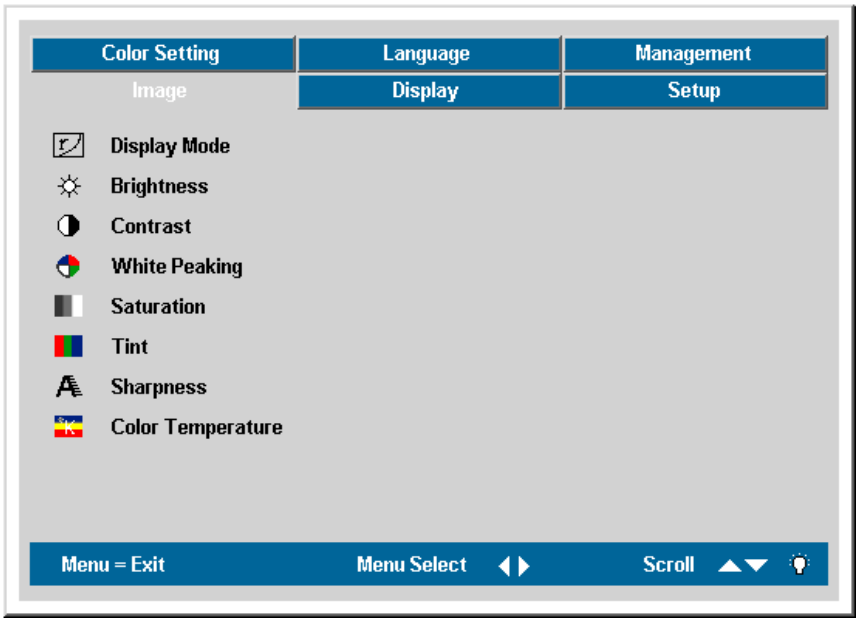

2. Press the cursor ◄► button until **Language** is highlighted.

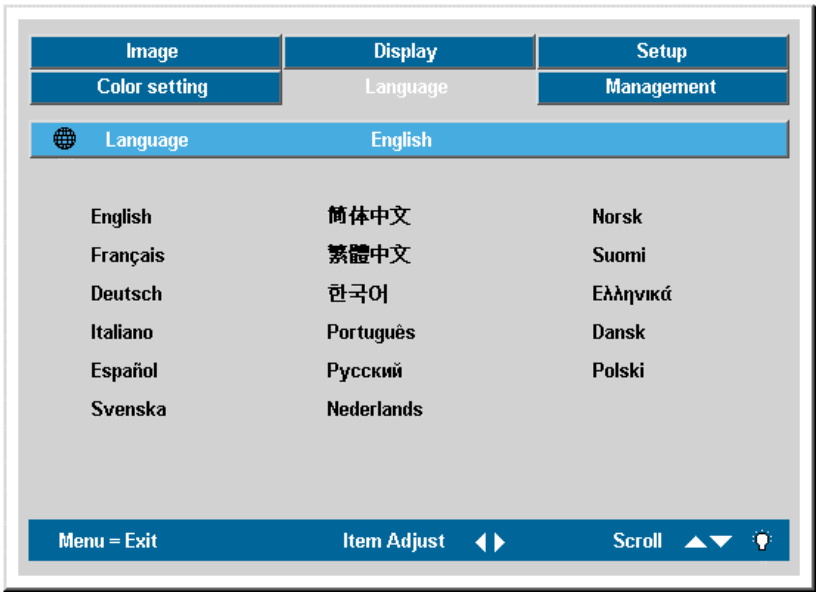

3. Press the cursor ▲▼ button until **Language** is highlighted.
4. Press the ◄► button until your language is displayed.
5. Press the **Menu** button twice to close the OSD.

OSD Menu Overview

Use the following illustration* to quickly find a setting or determine the range for a setting.

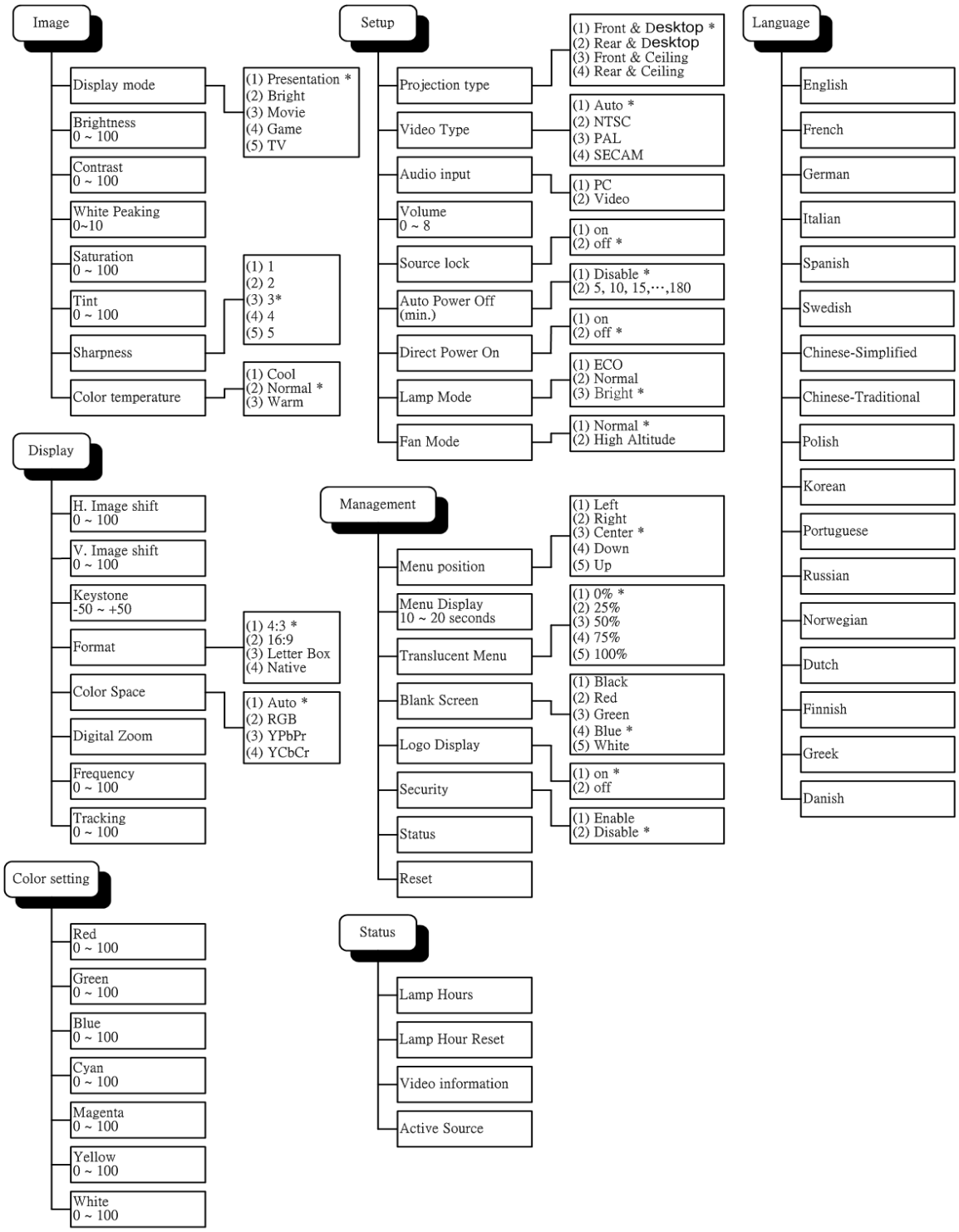

* Represents the default settings on the projector.

Image Menu

Press the **Menu** button to open the OSD menu.* Press the cursor ◄► button to move to the **Image** menu. Press the cursor ▲▼ button to move up and down in the **Image** menu. Press ◄► to change values for settings, and then press **Enter** or ► to confirm the new setting.

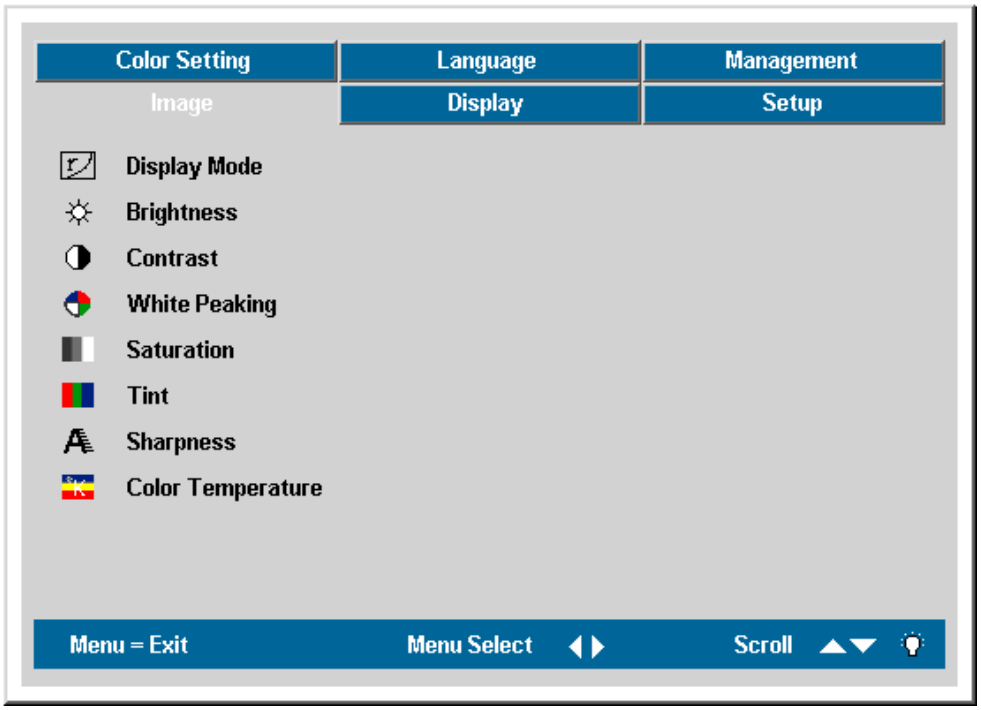

ITEM	DESCRIPTION	DEFAULT
Display Mode	Press the cursor ◄► button to select different display mode. (Range: Presentation – TV)	Presenta-tion
Brightness	Press the cursor ◄► button to adjust the brightness. (Range: 0 – 100)	50
Contrast	Press the cursor ◄► button to adjust the contrast. (Range: 0 – 100)	50
White Peaking	White Peaking increases the output in the brightest whites without changing the blacks and dark grays. It crushes the whites slightly, but it does not appear to clip them or seriously obscure white detail. If you prefer a stronger image, adjust toward the maximum setting. For a smoother, more natural image, adjust toward the minimum setting. Press ◄► to adjust the value of white peaking. (Range: 0 – 10)	Data source: 10 Video source: 2
Saturation	Press the cursor ◄► button to adjust the video saturation. (Range: 0 – 100)	50
Tint	Press the cursor ◄► button to adjust the video tint/hue. (Range: 0 – 100)	50

ITEM	DESCRIPTION	DEFAULT
Sharpness	Press the cursor ◄► button to adjust the display sharpness (Range: 1-5)	3
Color Temperature	Press the cursor ◄► button to adjust the color temperature (Range: Cool/Normal/Warm)	Normal

*Note: Menu represents the default settings on the projector.

Image Menu Functions Available for Connected Source

Function	RGB	DVI	Component Video	Composite Video	S-Video
Display Mode	O	O	O	O	O
Brightness	O	O	O	O	O
Contrast	O	O	O	O	O
White Peaking	O	O	O	O	O
Saturation			O	O	O
Tint			O	O	O
Sharpness	O	O	O	O	O
Color Temp	O	O	O	O	O

O = available to video source

Display Menu

Press the **Menu** button to open the OSD menu. Press the cursor ◄► button to move to the **Display** menu. Press the cursor ▲▼ button to move up and down in the **Display** menu. Press ◄► to change values for settings, and then press **Enter** or ► to confirm the new setting.

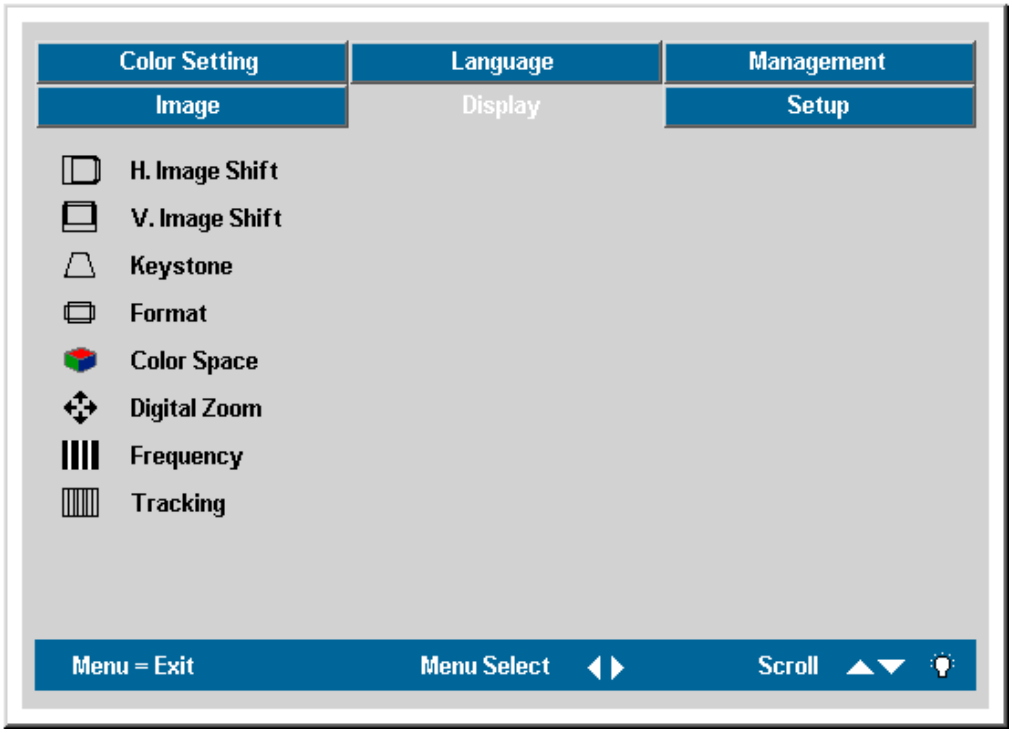

ITEM	DESCRIPTION	DEFAULT
H. Image Shift	Press the cursor ◄► button to adjust the display position in horizontal direction. (Range: 0 – 100)	Center position
V. Image Shift	Press the cursor ◄► button to adjust the display position in vertical direction. (Range: 0 – 100)	Center position
Keystone	Press the cursor ◄► button to correct distortion of the projected image. (Range: -50 – +50)	0
Format	Press the cursor ◄► button to toggle within the 4:3 standard format , the 16:9 High Definition TV (HDTV) format , Letter Box format and Native format	4:3
Color Space	Press the cursor ◄► button to adjust the color space. (Range: Auto – RGB – YPbPr- YCbCr)	Auto

ITEM	DESCRIPTION	DEFAULT
Digital Zoom	Digital operation for zoom and pan adjustment. Press **Enter** or ►. The Zoom menu appears. Press ▲ to zoom in; press ▼ to zoom out. Press **Enter** or ► to open the Pan menu. (You must zoom in before you can open the Pan menu.) 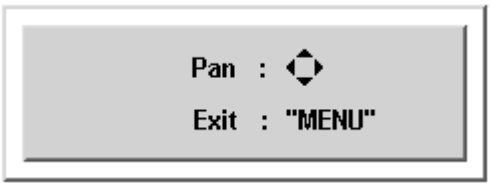 Use the cursor buttons to pan the zoomed image. Press the **Menu** button to exit.	—
Frequency	Press the cursor ◄► button to adjust the A/D sampling clock. (Range: 0° –180°)	—
Tracking	Press the cursor ◄► button to adjust the A/D sampling number. (Range: 0 – 100)	—

Display Menu Functions Available for Connected Source

Function	RGB	DVI	Component Video	Composite Video	S-Video
H. Image Shift	O				
V. Image Shift	O				
Keystone	O	O	O	O	O
Format	O	O	O	O	O
Color Space	O	O	O	O	O
Digital Zoom	O		O	O	O
Frequency	O		O		
Tracking	O				

O = available to video source

Setup Menu

Press the **Menu** button to open the OSD menu. Press the cursor ◄► button to move to the **Setup** menu. Press the cursor ▲▼ button to move up and down in the **Setup** menu. Press ◄► to change values for settings, and then press **Enter** or ► to confirm the new setting.

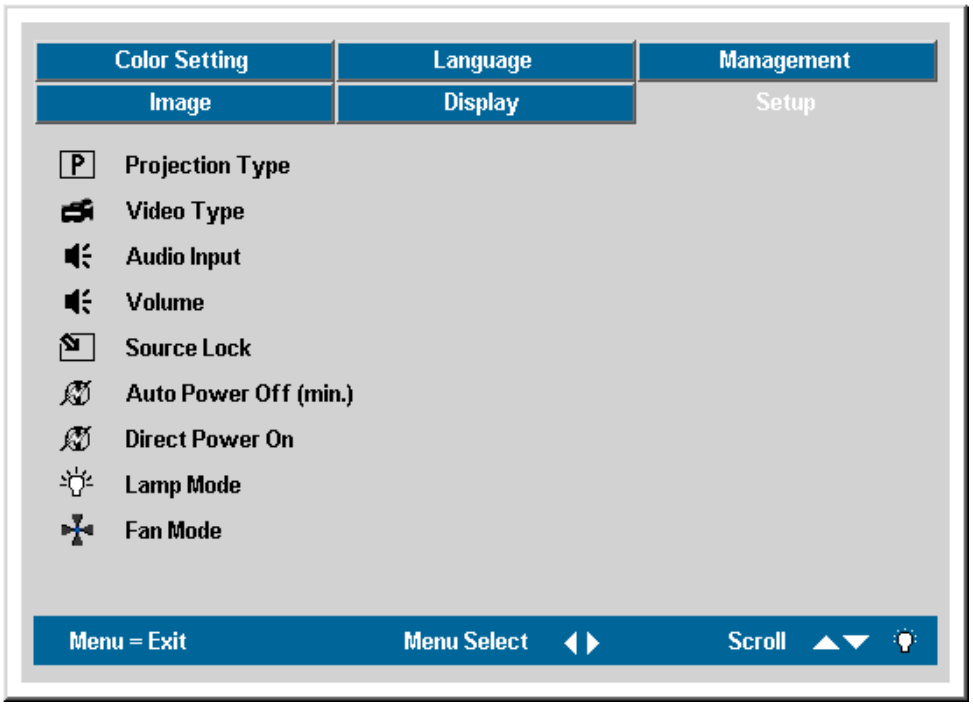

ITEM	DESCRIPTION	DEFAULT
Projection Type	Press the cursor ◄► button to choose from four projection methods: Desktop mount, front of screen Desktop mount, rear of screen Ceiling mount, front of screen Ceiling mount, rear of screen	Desktop front
Video Type	Press the cursor ◄► button to select the video standard (Range: Auto – NTSC – PAL – SECAM)	Auto
Audio Input	Press the cursor ◄► button to toggle between **PC** and **Video** input channels.	Data Source: PC Video Source: Video

ITEM	DESCRIPTION	DEFAULT
Volume	Press the cursor ◄► button to adjust the audio volume level. (Range: 0 – 8)	4
Source Lock	Enable or disable the automatically searching of all input port to find out the valid source.	Off
Auto Power Off (min.)	Automatically lamp off when no signal. (Range: Disable – 180)	Disable
Direct Power On	Automatically power on when AC power applied.	Off
Lamp Mode	Press the cursor ◄► button to choose the lamp mode. Range: Eco , Normal and Bright. Eco mode uses less power and extends lamp life, but decreases lamp brightness. Bright mode uses more power and reduces lamp life, but increases lamp brightness.	Bright
Fan Mode	Press the cursor ◄► button to change fan mode; recommend turning into high speed in high temperature, high humidity or high altitude area. Set Fan mode to High Altitude over 1500 meters (5000 feet).	Normal

Note:
The Setup menu functions are available to all video sources.

Setup Menu Functions Available for Connected Source

Function	RGB	DVI	Component Video	Composite Video	S-Video
Projection Type	O	O	O	O	O
Video Type				O	O
Audio Input	O	O	O	O	O
Volume	O	O	O	O	O
Source Lock	O	O	O	O	O
Auto Power Off	O	O	O	O	O
Direct Power On	O	O	O	O	O
Lamp Mode	O	O	O	O	O
Fan Mode	O	O	O	O	O

O = available video source

Color setting Menu

Press the **Menu** button to open the OSD menu. Press the cursor ◄► button to move to the **Color setting** menu. Press the cursor ▲▼ button to move up and down in the **Color setting** menu. Press ◄► to change values for settings, and then press **Enter** or ► to confirm the new setting.

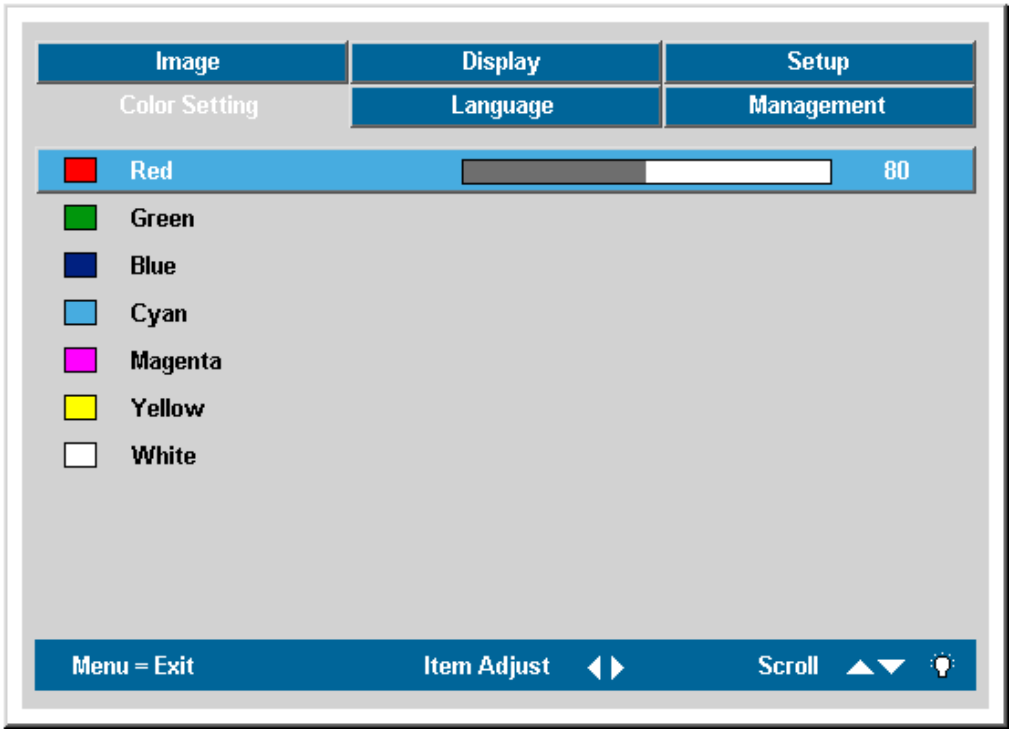

ITEM	DESCRIPTION	DEFAULT
Red	Press the cursor ◄► button to adjust the red color level. (Range: 0 - 100)	80
Green	Press the cursor ◄► button to adjust the green color level. (Range: 0 - 100)	80
Blue	Press the cursor ◄► button to adjust the blue color level. (Range: 0 - 100)	80
Cyan	Press the cursor ◄► button to adjust the cyan color level. (Range: 0 - 100)	80
Magenta	Press the cursor ◄► button to adjust the magenta color level. (Range: 0 - 100)	80
Yellow	Press the cursor ◄► button to adjust the yellow color level. (Range: 0 - 100)	80
White	Press the cursor ◄► button to adjust the white color level. (Range: 0 - 100)	80

Language Menu

Press the **Menu** button to open the Main menu. Press the cursor ◄► button to move to the **Language** menu. Press the cursor ▲▼ button to move up and down in the **Language** menu. Press ◄► to change values for settings, and then press **Enter** or ► to confirm the new setting.

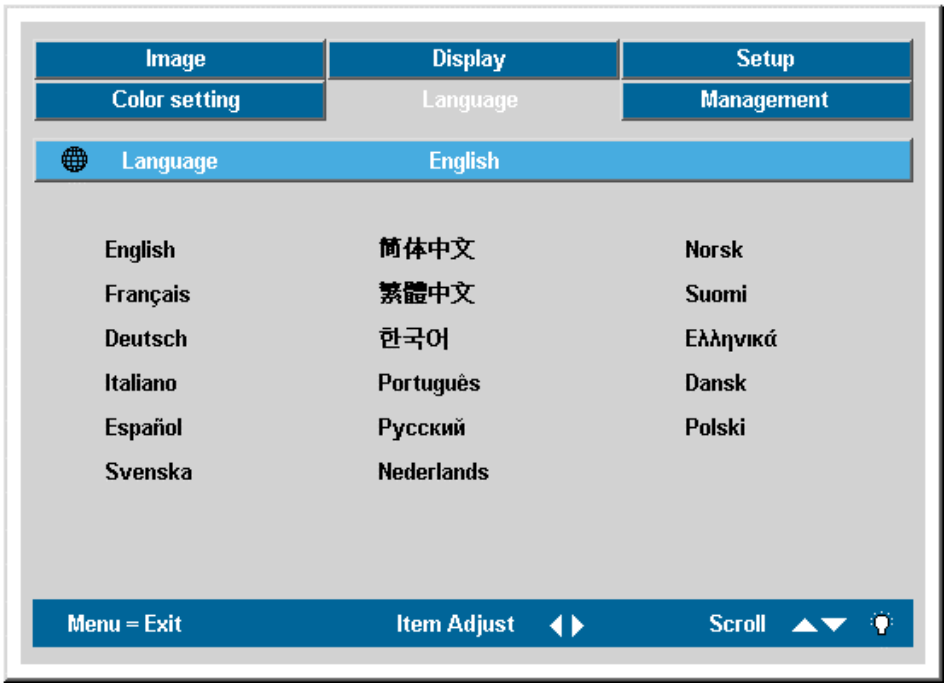

ITEM	DESCRIPTION	DEFAULT
English	Press the cursor ◄► to select the desired language. Press the **Menu** button twice to close the OSD	English
Français		
Deutsch		
Italiano		
Español		
Svenska		
简体中文		
繁體中文		
한국어		
Português		
Русский		
Nederlands		
Norsk		
Suomi		
Ελληνικά		
Dansk		
Polski		

Management Menu

Press the **Menu** button to open the Main menu. Press the cursor ◄► button to move to the **Management** menu. Press the cursor ▲▼ button to move up and down in the **Management** menu. Press ◄► to change values for settings, and then press **Enter** or ► to confirm the new setting.

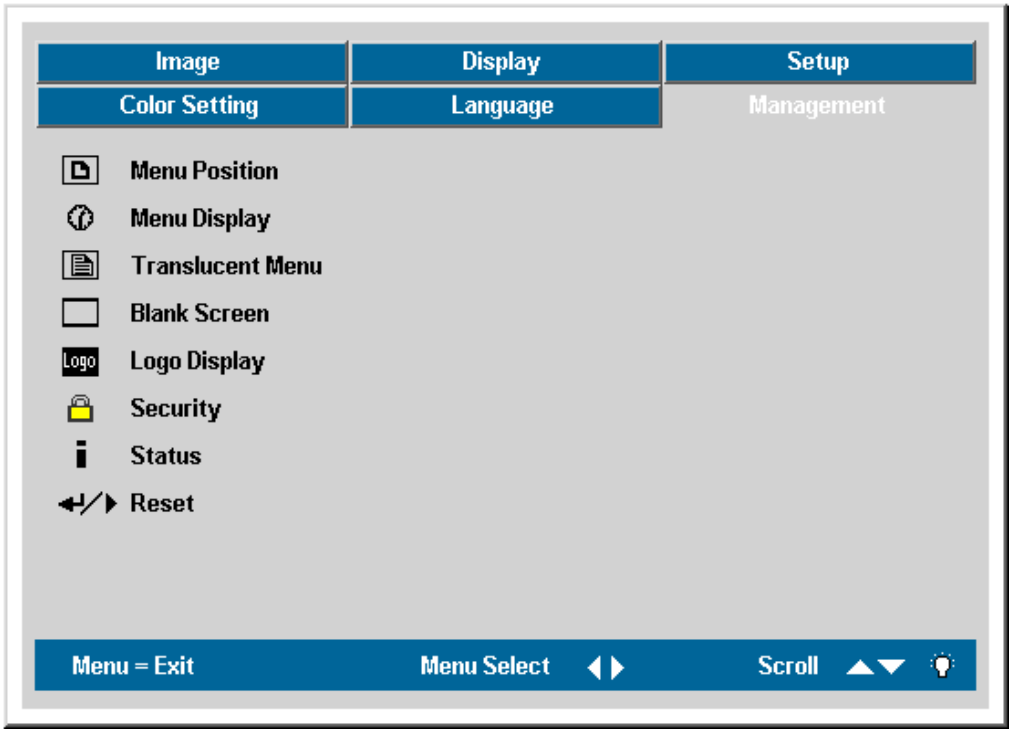

ITEM	DESCRIPTION	DEFAULT
Menu Position	Press the cursor ◄► button to select different OSD location.: Left Right Center Up Down	Center
Menu Display	Press the cursor ◄► button to select OSD timeout delay. (Range: 10 – 20 seconds)	15

ITEM	DESCRIPTION	DEFAULT
Translucent Menu	Press the cursor ◄► button to select OSD background translucent level. (Range: 0% – 25% – 50% – 75% – 100%)	0%
Blank Screen	Press the cursor ◄► button to select a background color for the blank screen. (Range: Black – Red – Green – Blue – White)	Blue
Logo Display	Press ◄► to enable or disable if the logo displays when the projector starts, and when no source is detected. (Range: On – Off)	On
Security	Press the cursor ◄► button to enable or disable Security Lock. When you enable Security Lock a Register Password dialog box appears: 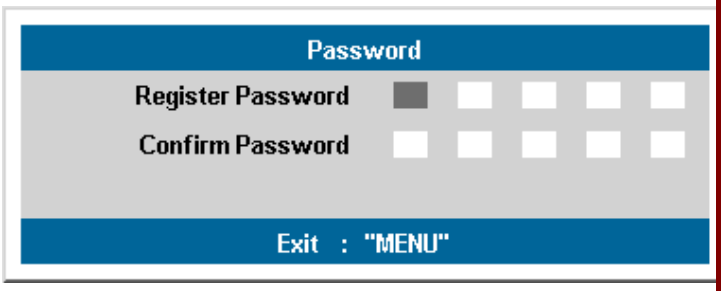 You can only use the following four cursor buttons, ▲ ▼ ◄ ► in the password fields. Press the cursor buttons five times in any order and confirm to set the password. When the password is enabled, it must be entered every time after you power on the projector. See “Setting an Access Password (Security Lock)” on page 21 for steps on setting the password.	Disable
Status	Press the cursor ► or Enter button to enter the Status menu. You can see Lamp Hours , Video Information , Active Source and Reset Lamp Hour in Status menu. See “Resetting the Lamp” on page 42.	
Reset	Press **Enter** or ► to reset all settings to default values	—

Replacing the Projection Lamp

The projection lamp should be replaced when it burns out. It should only be replaced with a certified replacement part, which you can order from your local dealer.

Important:
1. *The lamp contains a certain amount of mercury and should be disposed of according to local ordinance regulations.*

2. *Avoid touching the glass surface of the new lamp-doing so may shorten its operation life.*

Warning:
Be sure to turn off and unplug the projector at least an hour before replacing the lamp. Failure to do so could result in a severe burn.

1. Loosen the two captive screws on the lamp compartment cover (**A**).

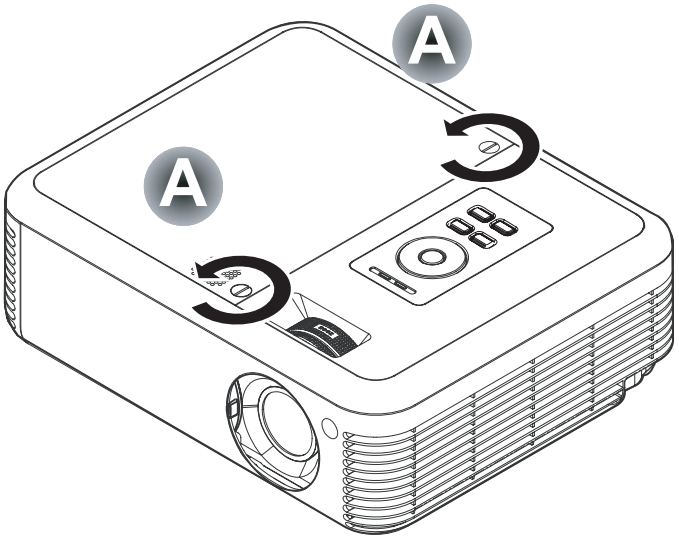

2. Open the lamp compartment cover (**B**).

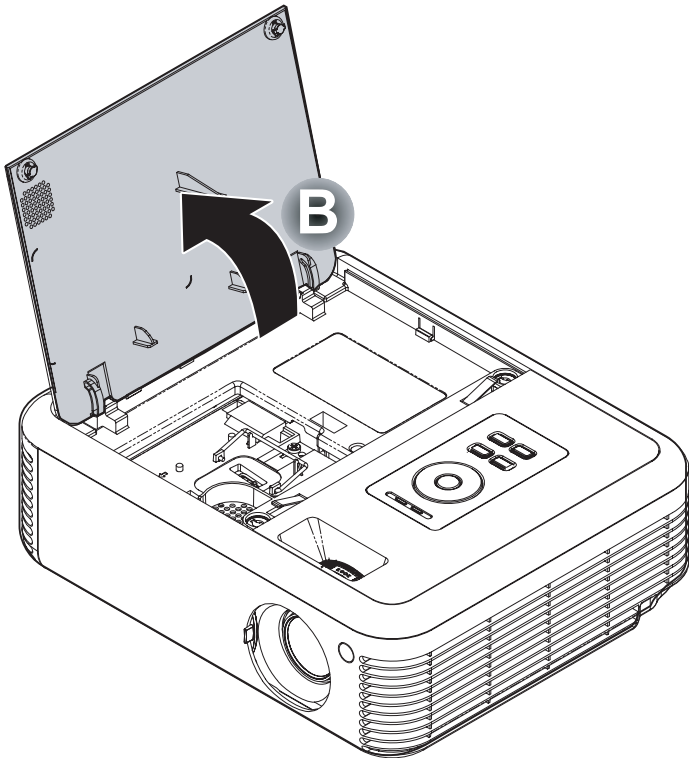

3. Remove the two screws from the lamp module (**C**).

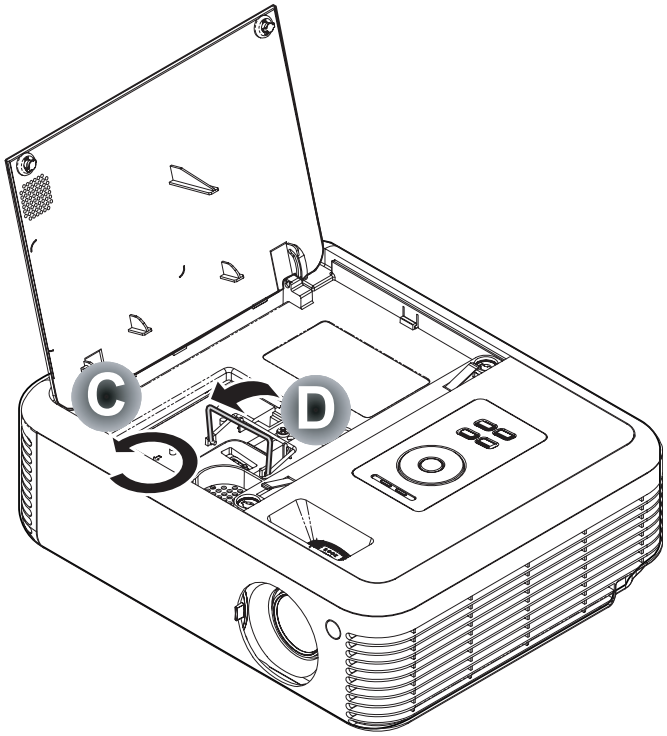

4. Lift the module handle up (**D**).

5. Pull firmly on the module handle to remove the lamp module (**D**)

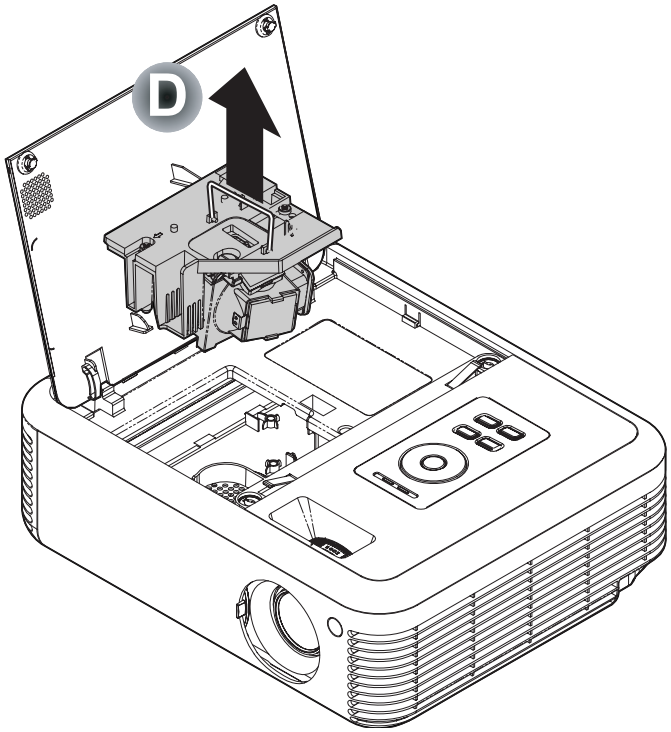

6. Reverse steps 1 to 5 to install the new lamp module.

Resetting the Lamp

After replacing the lamp, you should reset the lamp hour counter to zero. Refer to the following:

1. Press the **Menu** button to open the Image menu.

2. Press the cursor ◄ ► button to move to the **Management** menu.

3. Press the cursor ▲▼ button to move down to **Status**.

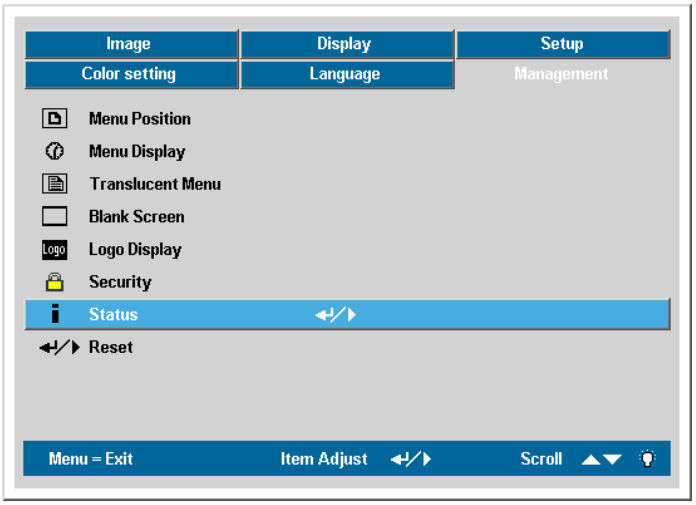

4. Press the cursor ► or **Enter** button to enter Status menu

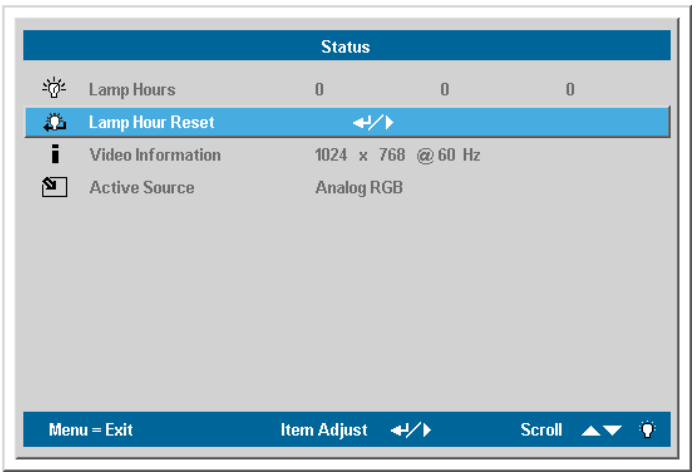

5. Press the cursor ▲▼ button to move down to **Lamp Hour Reset.** Press the cursor ► or **Enter** button.

A message screen appears.

6. Press the cursor buttons in this order: ▼; ▲; ◄; ►.
The **Status** menu appears again showing the **Lamp Hours** reset to zero.

Cleaning the Projector

Cleaning the projector to remove dust and grime will help ensure trouble-free operation.

Warning:
1. *Be sure to turn off and unplug the projector at least an hour before cleaning. Failure to do so could result in a severe burn.*

2. *Use only a dampened cloth when cleaning. Do not allow water to enter the ventilation openings on the projector.*

3. *If a little water gets into the projector interior while cleaning, leave unplugged in a well-ventilated room for several hours before using.*

4. *If a lot of water gets into the projector interior when cleaning, have the projector serviced.*

Cleaning the Lens

You can purchase optic lens cleaner from most camera stores. Refer to the following to clean the projector lens.

1. Apply a little optic lens cleaner to a clean soft cloth. (Do not apply the cleaner directly to the lens.)
2. Lightly wipe the lens in a circular motion.

Caution:
1. *Do not use abrasive cleaners or solvents.*

2. *To prevent discoloration or fading, avoid getting cleaner on the projector case.*

Cleaning the Case

Refer to the following to clean the projector case.

1. Wipe off dust with a clean dampened cloth.
2. Moisten the cloth with warm water and mild detergent (such as used to wash dishes), and then wipe the case.
3. Rinse all detergent from the cloth and wipe the projector again.

Caution:
To prevent discoloration or fading of the case, do not use abrasive alcohol-based cleaners.

Using the Kensington® Lock

If you are concerned about security, attach the projector to a permanent object with the Kensington slot and a security cable.

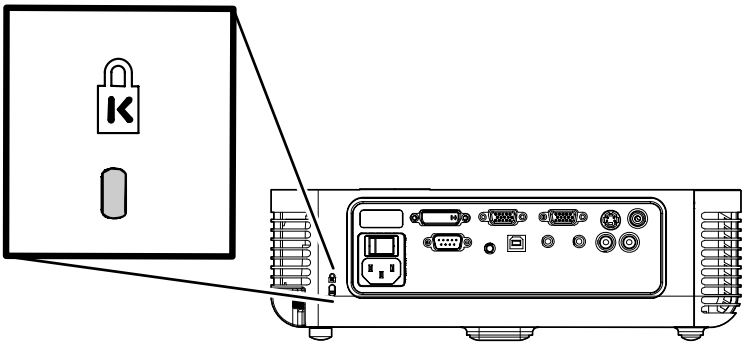

Common problems and solutions

These guidelines provide tips to deal with problems you may encounter while using the projector. If the problem remains unsolved, contact your dealer for assistance.

Often after time spent troubleshooting, the problem is traced to something as simple as a loose connection. Check the following before proceeding to the problem-specific solutions.

- *Use some other electrical device to confirm that the electrical outlet is working.*
- *Ensure the projector is turned on.*
- *Ensure all connections are securely attached.*
- *Ensure the attached device is turned on.*
- *Ensure a connected PC is not in suspend mode.*
- *Ensure a connected notebook computer is configured for an external display. (This is usually done by pressing an Fn-key combination on the notebook.)*

Tips for Troubleshooting

In each problem-specific section, try the steps in the order suggested. This may help you to solve the problem more quickly.

Try to pin point the problem and thus avoid replacing non-defective parts.
For example, if you replace batteries and the problem remains, put the original batteries back and go to the next step.

Keep a record of the steps you take when troubleshooting-the information may be useful when calling for technical support or for passing on to service personnel.

LED Error Messages

ERROR CODE MESSAGE	POWER LED/FLASHES	READY LED/FLASHES
Lamp usage task created error	2	1
Environment usage task created error	2	2
Thermal break status error	3	0
T1 temperature over temperature	3	1
T1 sensor status fail	4	1
Lamp lit error	5	1
Ballast SCI error	5	2
Ballast UART error	5	3
Fan1 error (Lamp)	6	1
Fan2 error (Ballast)	6	2
Fan3 error (Burner)	6	3
Fan4 error (Power)	6	4
Lamp door sensor detect high	7	0
DMD error	8	0
Color wheel error	9	0

Image Problems

Problem: No image appears on the screen

1. Verify the settings on your notebook or desktop PC.
2. Turn off all equipment and power up again in the correct order.

Problem: The image is blurred

1. Adjust the **Focus** on the projector.
2. Press the **Auto** button on the remote control or projector.
3. Ensure the projector-to-screen distance is within the 10-meter (33-feet) specified range.
4. Check that the projector lens is clean.

Problem: The image is wider at the top or bottom (trapezoid effect)

1. Position the projector so it is as perpendicular to the screen as possible.
2. Use the Keystone button on the remote control or projector to correct the problem.

Problem: The image is reversed or upside down

Check the **Projection** setting on the **Utility** menu of the OSD.

Problem: The image is streaked

1. Set the **Frequency** and **Tracking** settings on the **Utility** menu of the OSD to the default settings.
2. To ensure the problem is not caused by a connected PC's video card, connect to another computer.

Problem: The image is flat with no contrast

Adjust the **Contrast** setting on the Main menu of the OSD.

Problem: The color of the projected image does not match the source image.

Adjust the **Color Temperature** and **Gamma** settings on the Main menu of the OSD.

Lamp Problems

Problem: There is no light from the projector

1. Check that the power cable is securely connected.
2. Ensure the power source is good by testing with another electrical device.
3. Restart the projector in the correct order and check that the Power LED is green.
4. If you have replaced the lamp recently, try resetting the lamp connections.
5. Replace the lamp module.
6. Put the old lamp back in the projector and have the projector serviced.

Problem: The lamp goes off

1. Power surges can cause the lamp to turn off. Press the power button twice to turn off the projector. When the Ready LED is on, press the power button.
2. Replace the lamp module.
3. Put the old lamp back in the projector and have the projector serviced.

Remote Control Problems

Problem: The projector does not respond to the remote control

1. Direct the remote control towards remote sensor on the projector.
2. Ensure the path between remote and sensor is not obstructed.
3. Turn off any fluorescent lights in the room.
4. Check the battery polarity.
5. Replace the batteries.
6. Turn off other Infrared-enabled devices in the vicinity.
7. Have the remote control serviced.

Audio Problems

Problem: There is no sound

1. Adjust the volume on the remote control.
2. Adjust the volume of the audio source.
3. Check the audio cable connection.
4. Test the source audio output with other speakers.
5. Have the projector serviced.

Problem: The sound is distorted

1. Check the audio cable connection.
2. Test the source audio output with other speakers.
3. Have the projector serviced.

Having the Projector Serviced

If you are unable to solve the problem, you should have the projector serviced. Pack the projector in the original carton. Include a description of the problem and a checklist of the steps you took when trying to fix the problem--the information may be useful to service personnel.

Optoma Global Offices

For service or support, please contact your local office.

USA

715 Sycamore Drive
Milpitas, CA 95035, USA
Tel: +1-408-383-3700
Fax: +1-408-383-3702

www.optomausa.com
Service: service@optoma.com

Canada

5630 Kennedy Road,
Mississauga, ON, L4Z 2A9, Canada
Tel: 905-882-4228
Fax: 905-882-4229

www.optoma.com

Europe

42 Caxton Way, The Watford Business Park
Watford, Hertfordshire, WD18 8QZ, UK
Tel : +44 (0) 1923 691 800
Fax: +44 (0) 1923 691 888
www.optomaeurope.com

Service Tel: +44 (0)1923 691865
Service: service@tsc-europe.com

Taiwan

5F., No. 108, Minchiuan Rd.
Shindian City, Taipei Taiwan 231
Tel: +886-2-2218-2360
Fax: +886-2-2218-2313

www.optoma.com.tw
Service: services@optoma.com.tw

Hong Kong

Rm. 2507, 25/F., China United Plaza,
No. 1008 Tai Nan West St., Kowloon, H.K.
Tel: +852-2396-8968
Fax: +852-2370-1222

www.optoma.com.hk

China

5F, No. 1205, Kaixuan Rd.,
Changning District, Shanghai, 200052, China
Tel: +86-21-62947376
Fax: +86-21-62947375
www.optoma.com.cn

Latin America

715 Sycamore Drive
Milpitas, CA 95035, USA
Tel: 408-383-3700
Fax: 408-383-3702

www.optoma.com.br

www.optoma.com.mx

Projection Distance V.S. Projection Size

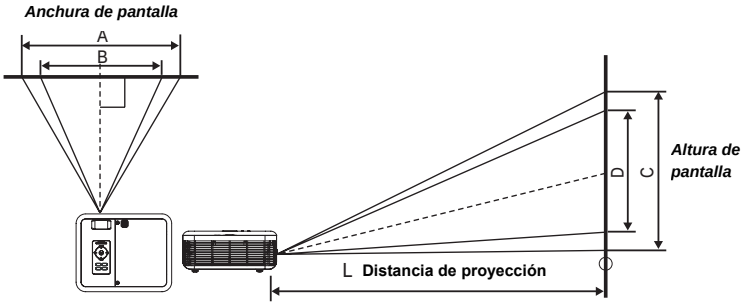

	Max. Screen Size		1.8	Min. Screen Size(Tele)		2.1
Projection Distance L	Diagonal	Width A	Height C	Diagonal	Width B	Height D
1.00 m	0.69 m	0.56 m	0.42 m	0.60 m	0.48 m	0.36 m
3 '	27 "	21 "	16 "	23 "	18 "	14"
1.50 m	1.04 m	0.83 m	0.63 m	0.89 m	0.71 m	0.54 m
4 '	41 "	32 "	24 "	35 "	28 "	21 "
2.40 m	1.67 m	1.33 m	1.00 m	1.43 m	1.14 m	0.86 m
7 '	65 "	52 "	39 "	56 "	44 "	33 "
2.80 m	1.94 m	1.56 m	1.17 m	1.67 m	1.33 m	1.00 m
9 '	76 "	61 "	45 "	65 "	52 "	39 "
3.20 m	2.22 m	1.78 m	1.33 m	1.90 m	1.52 m	1.14 m
10 '	87 "	69 "	52 "	74 "	59 "	44 "
3.60 m	2.50 m	2.00 m	1.50 m	2.14 m	1.71 m	1.29 m
11 '	98 "	78 "	59 "	84 "	67 "	50 "
4.00 m	2.78 m	2.22 m	1.67 m	2.38 m	1.90 m	1.43 m
13 '	109 "	87 "	65 "	93 "	74 "	56 "
4.40 m	3.06 m	2.44 m	1.83 m	2.62 m	2.10 m	1.57 m
14 '	120 "	96 "	72 "	103 "	82 "	61 "
4.80 m	3.33 m	2.67 m	2.00 m	2.86 m	2.29 m	1.71 m
15 '	131 "	104 "	78 "	112 "	89 "	67 "
5.20 m	3.61 m	2.89 m	2.17 m	3.10 m	2.48 m	1.86 m
17 '	142 "	113 "	85 "	121 "	97 "	73 "
5.60 m	3.89 m	3.11 m	2.33 m	3.33 m	2.67 m	2.00 m
18 '	153 "	122 "	91 "	131 "	104 "	78 "
7.00 m	4.86 m	3.89 m	2.92 m	4.17 m	3.33 m	2.50 m
22 '	191 "	153 "	114 "	164 "	131 "	98 "
10.00 m	6.94 m	5.56 m	4.17 m	5.95 m	4.76 m	3.57 m
32 '	273 "	218 "	164 "	234 "	187 "	140 "

Shaded rows are equivalent measurement in feet and inches

Timing Mode Table

The projector can display several resolutions. The following table outlines the resolutions that can be displayed by the projector.

Signal	Resolution	Frequency H. (KHz)	Frequency V. (Hz)	Video	Digital	Analog
NTSC	--	15.734	60.0	O	--	--
PAL / SECAM	--	15.625	50.0	O	--	--
VESA	640 x 350	37.9	85.1	--	O	O
	720 x 400	31.5	70.0	--	O	O
	720 x 400	37.9	85.0	--	O	O
	640 x 480	31.5	60.0	--	O	O
	640 x 480	37.9	72.8	--	O	O
	640 x 480	37.5	75.0	--	O	O
	640 x 480	43.3	85.0	--	O	O
	800 x 600	37.9	60.3	--	O	O
	800 x 600	46.9	75.0	--	O	O
	800 x 600	48.1	72.2	--	O	O
	800 x 600	53.7	85.1	--	O	O
	1024 x 768	48.4	60.0	--	O	O
	1024 x 768	56.5	70.1	--	O	O
	1024 x 768	60.0	75.0	--	O	O
	1024 x 768	68.7	85.0	--	O	O
	1280 x 1024	64.0	60.0	--	O	O
	1600 x 1200 **	75.0	60.0	--	--	O
Apple Macintosh	640 x 480	35.0	66.7	--	O	O
	832 x 624	49.7	74.5	--	O	O
	1024 x 768	60.2	74.9	--	O	O
	1152 x 870	68.7	75.1	--	O	O
HDTV	1920 x 1080	33.8	30.0	--	--	O
	1920 x 1080	28.1	25.0	--	--	O
	1280 x 720	45.0	60.0	--	--	O
SDTV	720 x 576	31.3	50.0	--	--	O
	720 x 480	31.5	60.0	--	--	O

O: Frequency supported

--: Frequency not supported

The native resolution is 1024 x 768. Resolution other than native mode may be displayed with uneven size of text or lines.

UXGA resolution with half-sampling.

Projector Dimensions

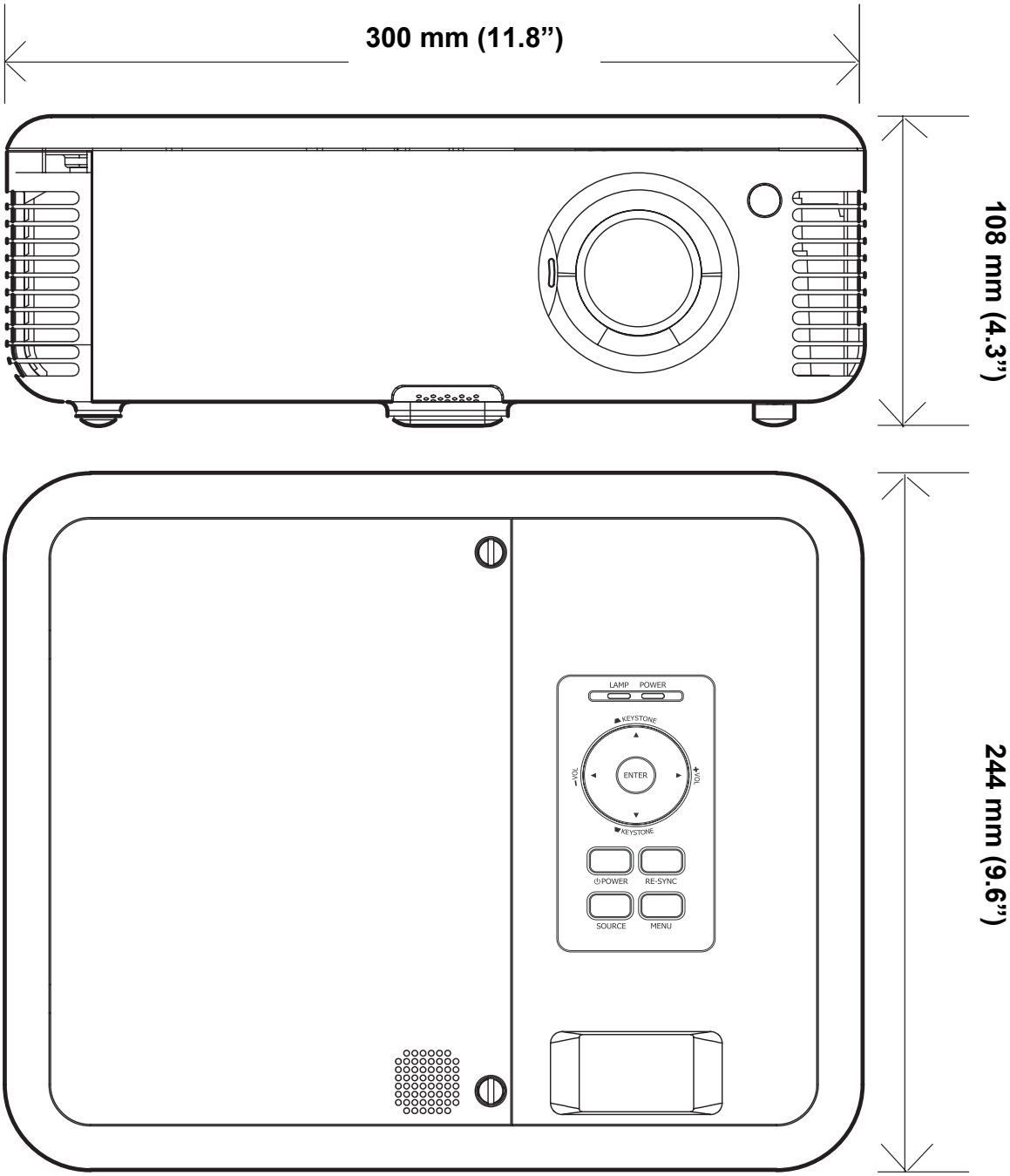

FCC Warning

This equipment has been tested and found to comply with the limits for a Class B digital device pursuant to Part 15 of the FCC Rules. These limits are designed to provide reasonable protection against harmful interference when the equipment is operated in a commercial environment.

This equipment generates, uses, and can radiate radio frequency energy and, if not installed and used in accordance with the instruction manual, may cause harmful interference to radio communications. Operation of this equipment in a residential area is likely to cause harmful interference in which case the user will be required to correct the interference at his own expense.

Changes or modifications not expressly approved by the parties responsible for compliance could void the user's authority to operate the equipment.

Canada

This class B digital apparatus complies with Canadian ICES-003.

Safety Certifications

FCC Class B, UL, C-UL, CE, CB, TUV-GS, CCC, ICES-003 (class B), MIC

EN 55022 Warning

This is a Class B product. In a domestic environment, it may cause radio interference, in which case the user may be required to take adequate measures. The typical use is in a conference room, meeting room, or auditorium.

RoHS Compliant

Copyright

This publication, including all photographs, illustrations and software, is protected under international copyright laws, with all rights reserved. Neither this manual, nor any of the material contained herein, may be reproduced without written consent of the author.

© Copyright September, 2006

Disclaimer

The information in this document is subject to change without notice. The manufacturer makes no representations or warranties with respect to the contents hereof and specifically disclaims any implied warranties of merchantability or fitness for any particular purpose. The manufacturer reserves the right to revise this publication and to make changes from time to time in the content hereof without obligation of the manufacturer to notify any person of such revision or changes.