myprojectorlamps.com

The most trusted, dependable name in projector lamp sales.

http://www.myprojectorlamps.com

http://www.myprojectorlamps.ca

http://www.myprojectorlamps.eu

The following projector manual has not been modified or altered in any way.

FCC Notice

This equipment has been tested and found to comply with the limits for a Class B digital device, pursuant to Part 15 of FCC Rules. These limits are designed to provide reasonable protection against harmful interference in a residential installation.

CE

Trademarks

Trademarks are the rights of their respective owners.

Table of Contents

Usage Notice

Precautions 2

Introduction

Product Features 3
Package Overview 4
Product Overview 5

Installation

Connecting the Projector 8
Powering On/Off the Projector 9
Adjusting the Projected Image 11

User Controls

Panel Control & Remote Control 13
On-Screen Display Menus 15

Appendices

Troubleshooting 22
Changing the Lamp 25
Specifications 26
Compatibility Modes 27

Usage Notice

⚠ **Warning-**	Do not look into the lens. The bright light may hurt your eyes.
⚠ **Warning-**	To reduce the risk of fire or electric shock, do not expose this product to rain or moisture.
⚠ **Warning-**	Please do not open or disassemble the product as this may cause electric shock.
⚠ **Warning-**	When changing the lamp, please allow unit to cool down, and follow all changing instructions.
⚠ **Warning-**	This product will detect the life of the lamp itself. Please be sure to change the lamp when it shows warning messages.
⚠ **Warning-**	After changing a new lamp, please reset the lamp life from OSD menu.
⚠ **Warning-**	Before switching off the product, please keep the cooling fan running for a few minutes.
⚠ **Warning-**	When connecting the projector to computer, please turn on the projector first.
⚠ **Warning-**	To reduce the risk of injury to the eyes, do not look directly into the laser light on the remote control and do not point the laser light into anyone's eyes. This remote control is equipped with a Class II laser that emits radiation.
⚠ **Warning-**	When the lamp reaches the end of its life, it will burn out and may make a loud popping sound. If this happens, the projector will not turn back on until the lamp module has been replaced. To replace the lamp, follow the procedures listed under "Changing the Lamp".

Precautions

Follow all warnings, precautions and maintenance as recommended in this user's manual to maximize the life of your unit.

Do:

- Turn off the product before cleaning.
- Use a soft cloth moistened with mild detergent to clean the display housing.
- Disconnect the power plug from AC outlet if the product is not being used for a long period of time.

Don't:

- Block the slots and openings on the unit provided for ventilation.
- Use abrasive cleaners, waxes or solvents for your cleaning.
- Use under the following conditions:
  - Extremely hot, cold or humid environment.
  - In areas susceptible to excessive dust and dirt.
  - Near any appliance generating a strong magnetic field.
  - Place in direct sunlight.

Introduction

Product Features

This product is an XGA single chip 0.7" DLP™ Projector. The outstanding features of it are listed as follows:

- True XGA, 1024 x 768 addressable pixels
- 3.3 lbs (1.5 kgs) lightweight compact design
- Single chip DLP™ technology
- SXGA compression and VGA, SVGA re-sizing
- 130 Watts user replaceable P-VIP lamp
- Mac/NEC PC-98/FM Towns compatible
- NTSC/NTSC4.43/PAL/PAL-M/PAL-N/SECAM and HDTV (1080i,720P,480i/P) compatible
- Full function remote with mouse control and laser pointer
- High-tech DVI Connection for digital and analog video connectivity
- High definition TV compatibility
- User friendly Multilingual on-screen display menu
- Advanced electronic keystone correction
- User friendly control panel with backlight
- Luxurious carrying case included

Package Overview

This projector comes with all the items shown below. Check to make sure your unit is complete. Contact your dealer immediately if anything is missing.

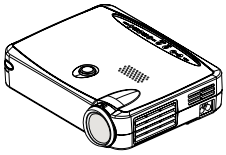

Projector

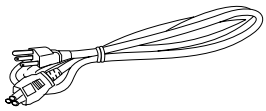

Power Cord

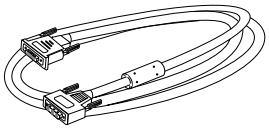

D-Sub RGB to DVI Cable

S-Video Cable

RCA Audio Cable

Composite Video Cable

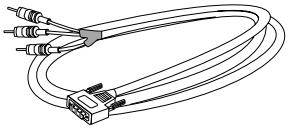

DVI Signal Cable for HDTV/Component

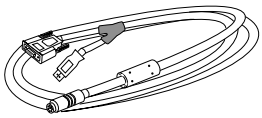

Remote Mouse Y Cable

Remote Control with Mouse Function & Laser Pointer

Battery x 2

User's Guide

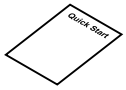

Quick Start Card

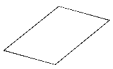

Warranty Card

Carrying Case

Product Overview

Panel Control

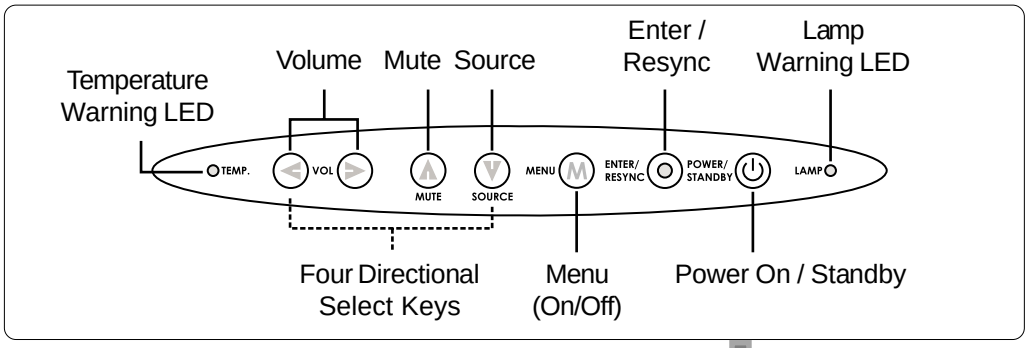

Main Unit

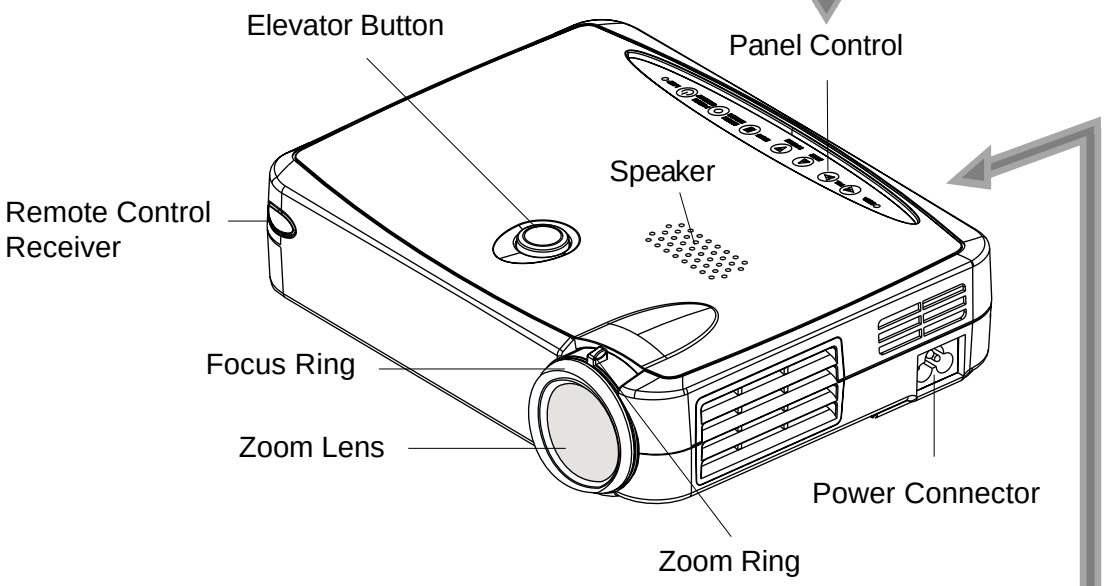

Connection Ports

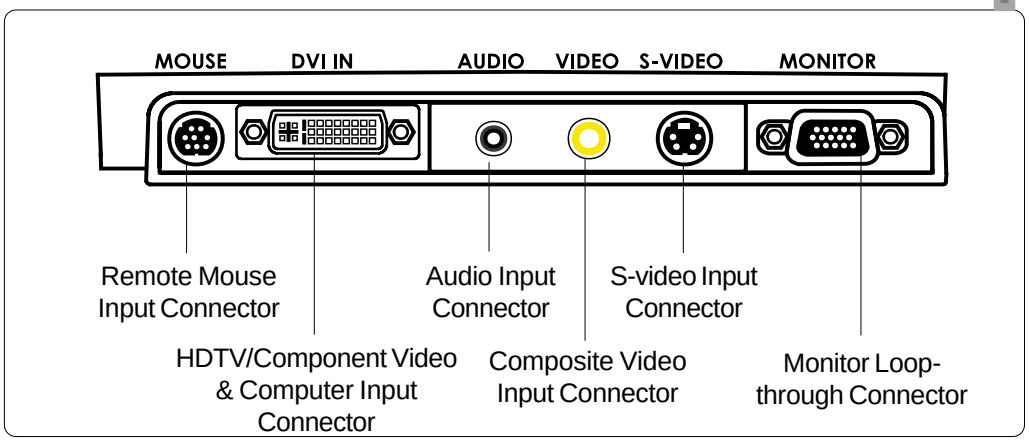

Remote Control with Mouse Function & Laser Pointer

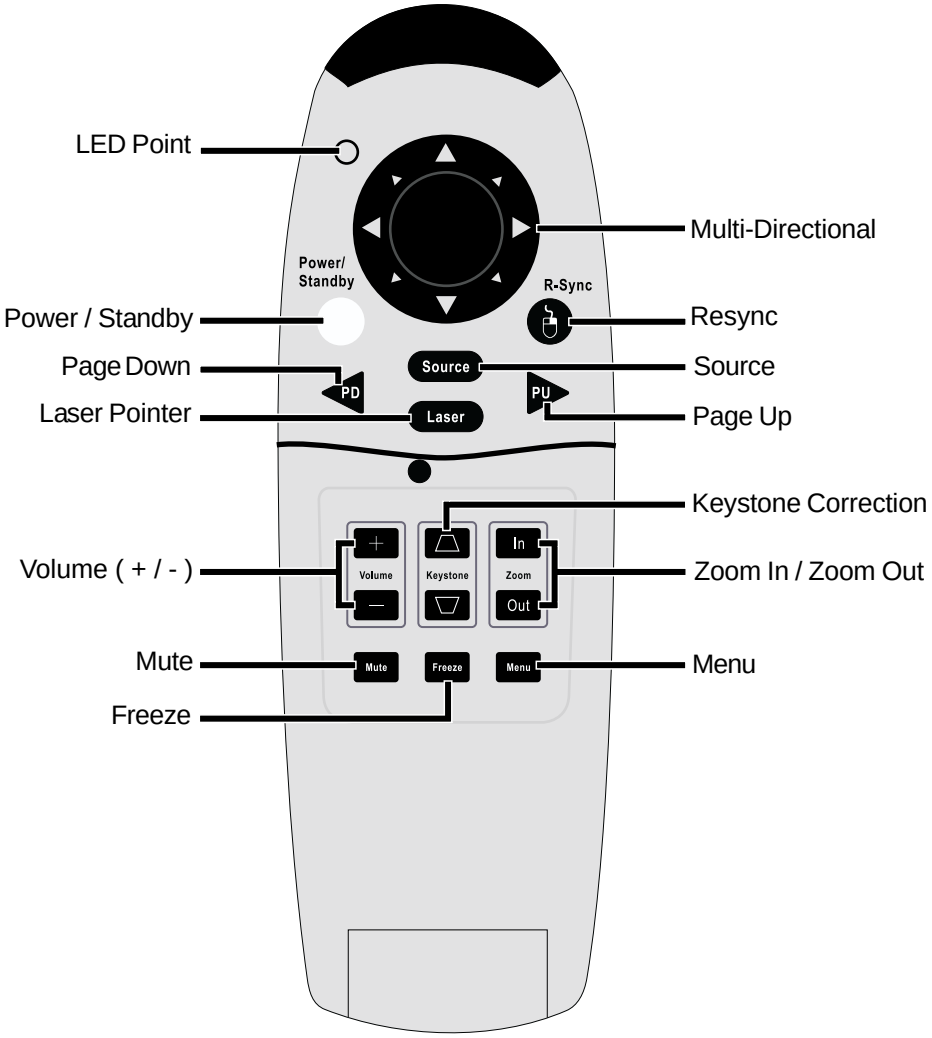

Caution: To reduce the risk of injury to the eyes, do not look directly into the laser light on the remote control and do not point the laser light into anyone's eyes. This remote control is equipped with a Class II laser that emits radiation.

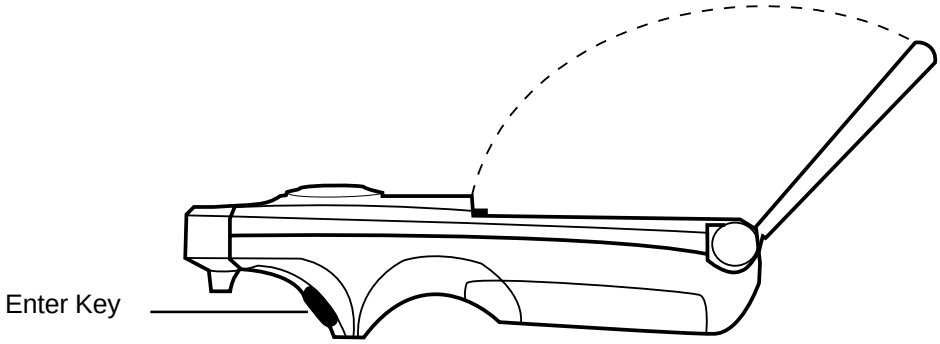

Laser Pointer Caution

Installation

Connecting the Projector

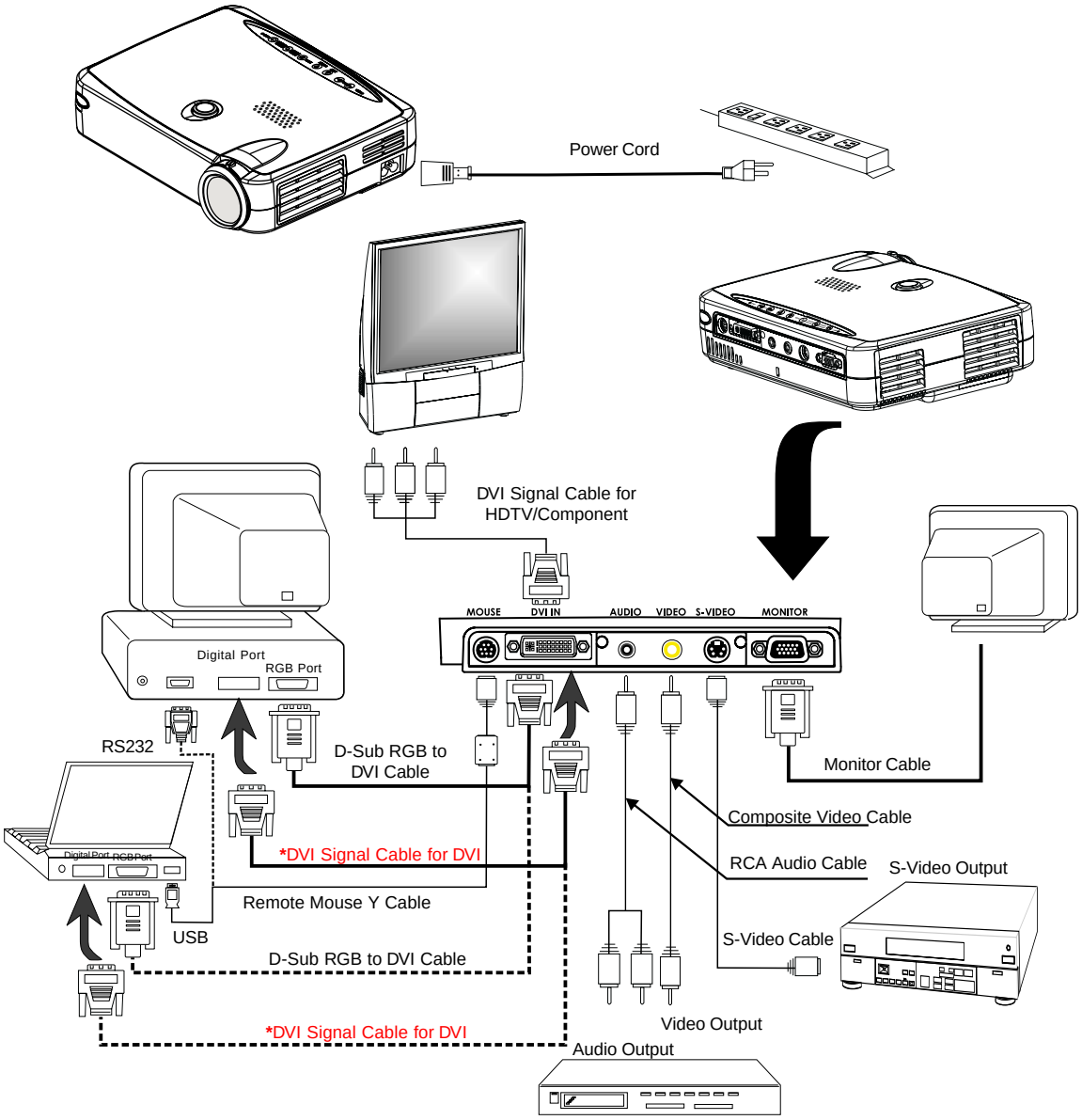

❖ *DVI signal cable for DVI is the optional accessory.*

❖ *To ensure the projector works well with your computer, please configure the display mode of your graphic card to make it less than or equal to 1024 X 768 resolution. Make sure timimg of the display mode is compatible with the projecor. Refer to the"Compatibility Modes"section on page 27.*

Power On/Off the Projector

◆ Powering On the Projector

1. Remove the lens cap.❶
2. Ensure that the power cord and signal cable are securely connected.
3. The “Power/Standby” indicator will flash.❷ And press the “Power/Standby” button again to start on your projector.

   The startup screen will display and count down for 20 seconds and the Power/Standby indicator will light solid amber.
4. Turn on your source (computer, notebook, or video player ,etc.). The projector will detect your source automatically.

* *If the screen displays “No Signal” , please make sure the signal cables are securely connected.*

* *If you connect multiple sources at the same time, use the “Source” button on the Remote Control or Panel Control to switch.*

* *Turn on the projector first and then the computer.*

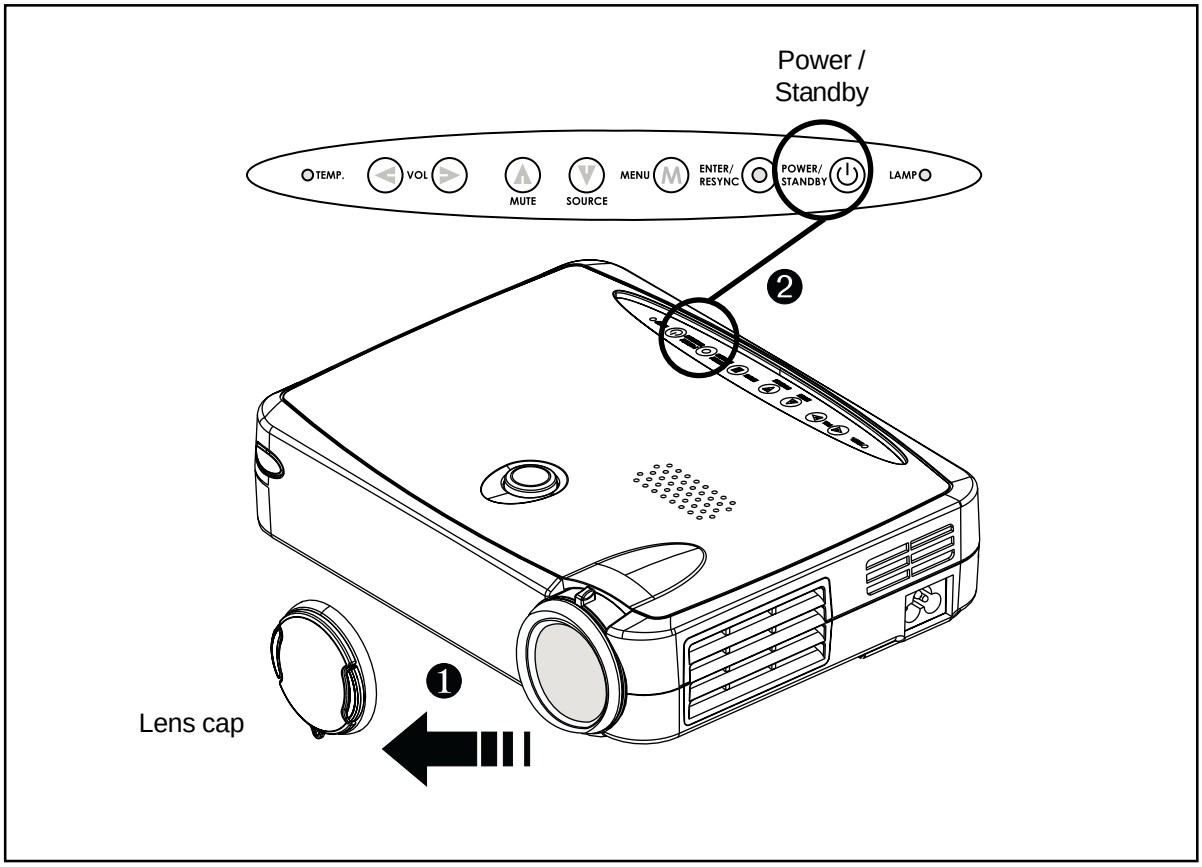

◆ Powering Off the Projector

1. Press the “Power/Standby” button to turn off the projector lamp.
2. After pressing the “Power/Standby” button, you will see a message “Power off the lamp?” on the on-screen display. Press the “Power/Standby” button again to confirm. Otherwise the message will disappear after 5 seconds.
3. “Power/Standby” LED indicator will flash amber for about 30 seconds.
4. Disconnect the power cord from the electrical outlet and the projector.

* *When the “LAMP” indicator lights solid orange; please change the lamp module immediately.*

* *When the “TEMP” indicator lights solid orange, it indicates the projector has been overheated. The display will automatically shut itself down. Under normal conditions, the display can be switched on again for your presentation. If the problem persists, you should contact your local dealer or our service center.*

* *No matter the video source is input or not, if you press“Power/Standby” by accident, a “Power off the lamp ?” sign will display in screen. You can clear the turn-off message by pressing any function key. Or you can just ignore this message without pressing any function key; the message will disappear after 5 seconds and restore to previous status.*

Adjusting the Projected Image

◆ Adjusting the Projector Height

The projector is equipped with an elevator foot for adjusting the projector height.

To raise the projector:

1. Press the elevator button ❶.
2. Raise the projector to the desired display angle ❷, then release the button to lock the elevator foot into position.
3. Use ❸ to fine-tune height adjustment.

To lower the projector:

1. Press the elevator button.
2. Lower down the projector, then release the button to lock the elevator foot into position.
3. Use ❸ to fine-tune height adjustment.

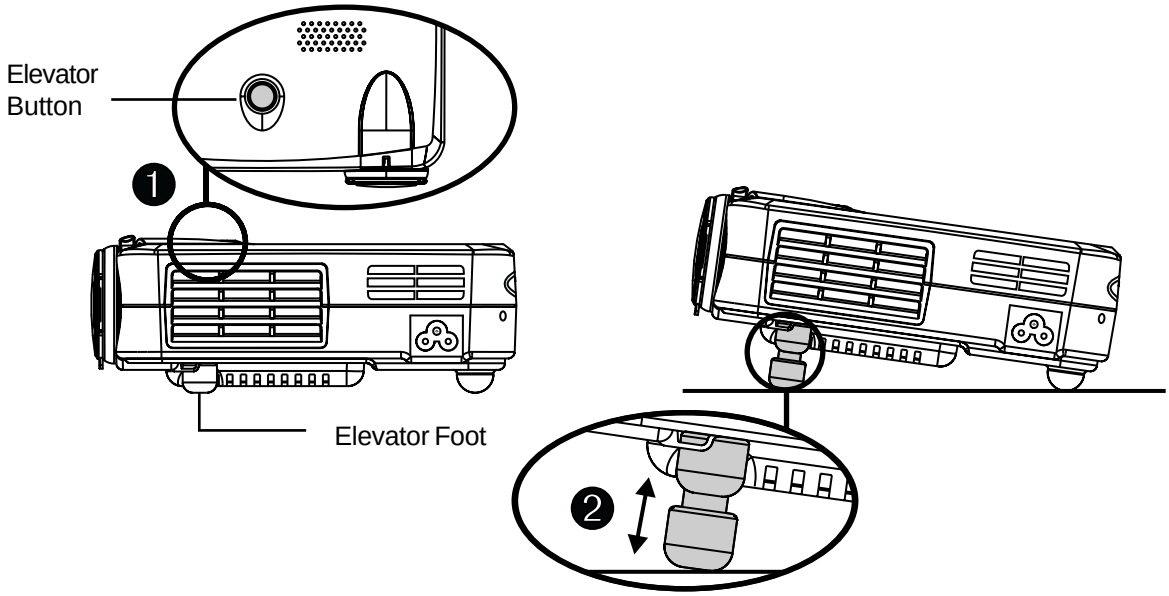

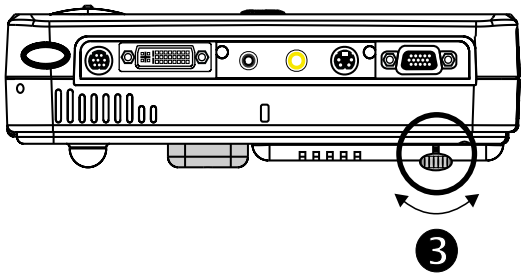

◆ Adjusting the Projector Zoom / Focus

You may adjust zoom ring to zoom in / out. Rotate the zoom ring counter-clockwise to zoom in and clockwise to zoom out. To focus the image, rotate the focus ring until the image is clear. The projector will focus at distances from 3.3 feet to 39.4 feet (1m to 12m).

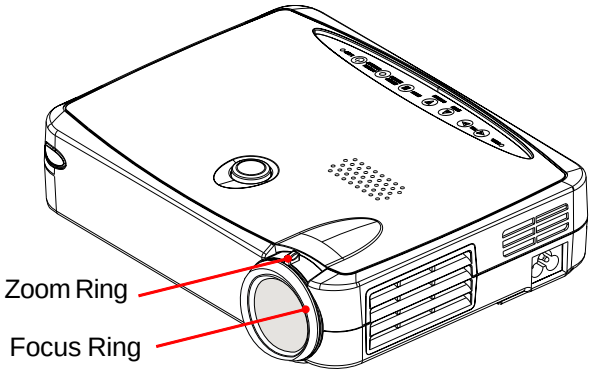

◆ Adjusting Projection Image Size

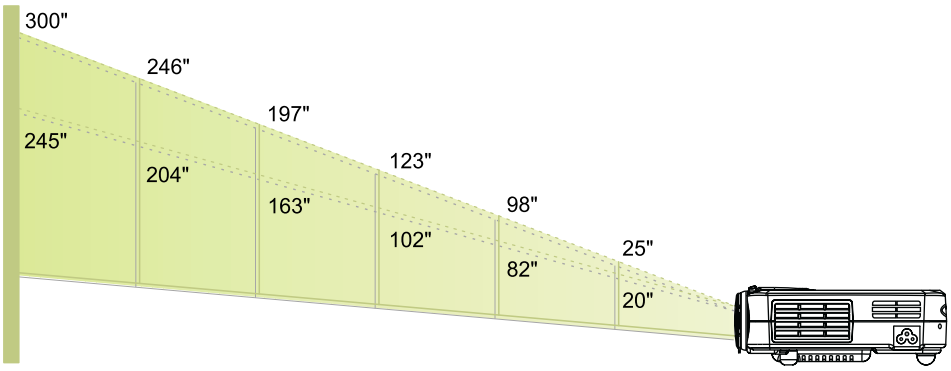

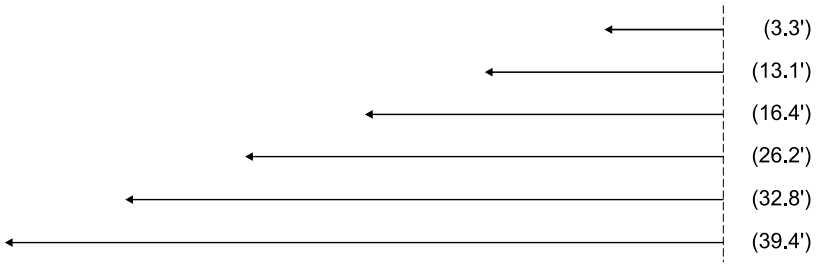

Screen (Diagonal)	Max.	25"	98"	123"	197"	246"	300"
	Min.	20"	82"	102"	163"	204"	245"
Screen Size	Max.(WxH)	20.0" x 15.0"	78.4" x 58.8"	98.4" x 73.8"	157.6" x 118.2"	196.8" x 147.6"	240.0" x 180.0"
	Min.(WxH)	16.0" x 12.0"	65.6" x 49.2"	81.6" x 61.2"	130.4" x 97.8"	163.2" x 122.4"	196.0" x 147.0"
Distance		3.3'	13.1'	16.4'	26.2'	32.8'	39.4'

*This graph is for user's reference only.

User Controls

Panel Control & Remote Control

There are two ways for you to control the function: Remote Control and Panel Control.

Panel Control

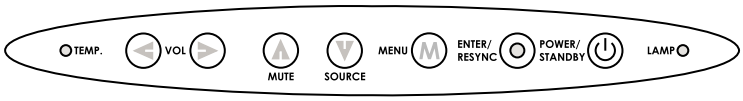

Remote Control

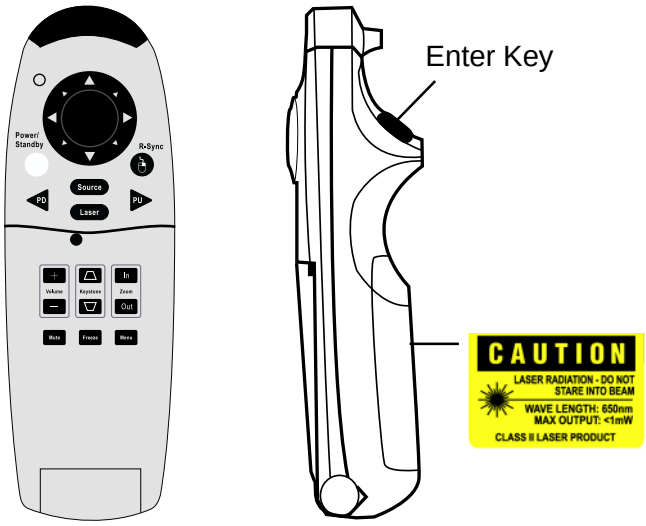

Power / Standby

- Refer to the “Power On/Off the Projector” section on page 9~10.

Source

- Press “Source” to choose RGB, Digital RGB, S-Video and Composite sources.

Resync

Use the Remote Control

- Automatically synchronizes the projector to the input source, when you press this button while the remote control cover is opened.
- If the remote control cover is closed, the Mouse/Resync button functions like the Right mouse button.

Use the Panel Control

- Automatically synchronizes the projector to the input source, when you press this button while the OSD isn’t displayed.

Four Directional Select Keys

- When you close the cover of remote control, this key can be used as a mouse to control direction.

  *** The above function is only enabled with the connection between computer and projector by remote mouse Y cable.**

- When the cover of remote control is open, this key can be used for the ▲ ▼ ◀ ▶ operation for OSD display.

Page Up (Computer mode only)

- Use this button to page up. *Under remote mouse connected status only.

Page Down (Computer mode only)

- Use this button to page down. *Under remote mouse connected status only.

Laser

- Aim the remote at the riewing screen, press and hold this button to activate the laser pointer.

Menu

- Press “Menu” to open the on-screen display (OSD) menus and press ◀ ▶ key to select main menu . To exit OSD, press the “ Menu” button again. The projector will save any changes you made automatically.

Freeze

- Press the “Freeze” button to still the screen image.

Mute

- Use to mute sound.

Volume + / -

- Increases/decreases speaker volume.

Keystone + / -

- Adjust image distortion caused by tilting the projector. (±16 degrees)

Zoom In / Out (Computer mode only)

- Magnifies an image up to a factor of 32 times on the projection screen.
- Diminishes the zoom in image.

Enter

Use the Remote Control

- Confirm your selection of items, when you open the front cover of remote control.
- If the remote control cover is closed, the Enter button functions like the Left mouse button.

Use the Panel Control

- Confirm your selection of items, when you press this button while the OSD is displayed.

On-Screen Display Menus

How to operate

- *The Projector has a multilingual On-Screen Display(OSD) menus that allow you to make image adjustments and change a variety of settings. In computer source, the OSD will be the "Computer OSD". In video source, the OSD will be the " Video OSD". The projector will detect the source automatically.*
- *To open the OSD menu, press the "Menu" button on the Remote Control or Panel Control.*
- *When OSD is displayed, press ◀ ▶ key to select main menu.*
  E.g.:Image-I →Image-II →Audio →Language →Management →Image-I...
  While making selection on a particular page, press "Enter" key to go into sub-menu.
- *Press ▲ ▼ key to select the required item and adjust the settings by ◀ ▶ key. When a specified item is selected, the color of the item will change from yellowish brown to blue.*
  E.g.:Brightness →Color Temp. →Zoom →Contrast →Keystone →Brightness...
- *While using ◀ ▶ key to adjust the parameter or required function in the items of the submenu, confirm all the functions of the main menu by pushing "Enter" button after all/part of the items have been modified. Press "Enter" button to confirm, and the screen will be back to the main menu at once. Only ◀ ▶ key is enabled now.*
- *To exit the OSD, press the "Menu" button again.*

Computer mode

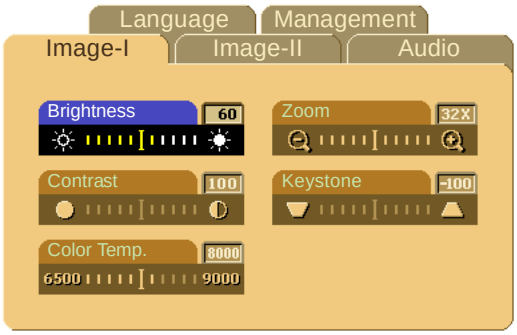

Image-I (Computer mode)

Brightness

Adjusting the brightness of the image.

- Press the ◀ to darken the image.
- Press the ▶ to lighten the image.

Contrast

The contrast controls the degree of difference between the lightest and darkest parts of the picture. Adjusting the contrast changes the amount of black and white in the image.

- Press the ◀ to decrease the contrast.
- Press the ▶ to increase the contrast.

Color Temperature

Adjust the color temperature. The range is from 6500K to 9000K . The factory default is 7050K . With the higher temperature, the screen looks colder; with the lower temperature, the screen looks warmer.

Zoom

- Press the ▶ to Magnify an image up to a factor of 32 times on the projection screen.
- Press the ◀ to Diminish the zoom in image.

Keystone (Keystone Correction)

Adjust image distortion caused by tilting the projector. (±16 degrees)

Video mode

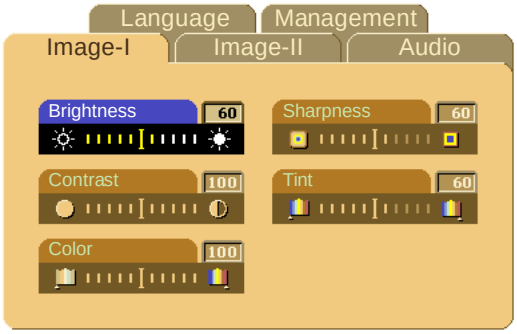

Image-I (Video mode)

Brightness

Adjusting the brightness of the image.

- Press the ◀ to darken the image.
- Press the ▶ to lighten the image.

Contrast

The contrast controls the degree of difference between the lightest and darkest parts of the picture. Adjusting the contrast changes the amount of black and white in the image.

- Press the ◀ to decrease the contrast.
- Press the ▶ to increase the contrast.

Color

The color setting adjusts a video image from black and white to fully saturated color.

- Press the ◀ to decrease the amount of color in the image.
- Press the ▶ to increase the amount of color in the image.

Sharpness

Adjusting the sharpness of the image.

- Press the ◀ to decrease the sharpness.
- Press the ▶ to increase the sharpness.

Tint

The tint adjusts the color balance of red and green.

- Press the ◀ to increase the amount of green in the image.
- Press the ▶ to increase the amount of red in the image.

Computer mode

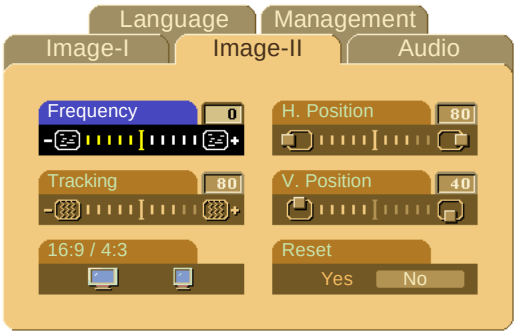

Image-II (Computer mode)

Frequency

"Frequency" is for changing the display data frequency to match the frequency of your computer's graphic card. When you experience a vertical flickering bar, use this function to make an adjustment.

Tracking

Choose " Tracking" item to synchronize the signal timing of the display with that of the graphic card. When you experience an unstable or flickering image, use this function to correct it.

16 : 9 / 4 : 3

You can select this function to fit your desired aspect ratio type.

Horizontal Position

- Press the ◀ to move the image left.
- Press the ▶ to mov e the image right.

Vertical Position

- Press the ◀ to move the image up.
- Press the ▶ to move the image down.

Reset

Choose " Yes" to return the display parameters of the current mode to its factory default settings.

* ***Reset items include both Image-I and Image-II settings.***

Video mode

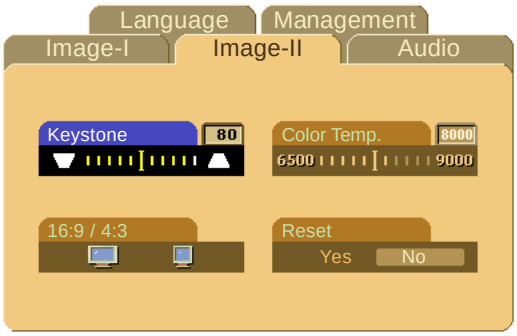

Image-II (Video mode)

Keystone Correction

Adjust image distortion caused by tilting the projector. (±16 degrees)

16 : 9 / 4 : 3

You can select this function to fit your desired aspect ratio type.

Color Temperature

Adjust the color temperature. The range is from 6500K to 9000K . The factory default is 7050K . With the higher temperature, the screen looks colder; with the lower temperature, the screen looks warmer.

Reset

Choose " Yes" to return the display parameters of the current mode to its factory default settings.

* ***Reset items include both Image-I and Image-II settings.***

Computer / Video mode

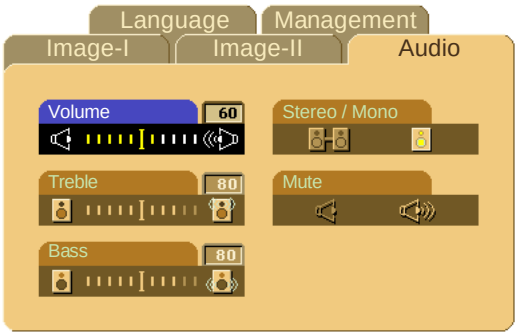

Computer / Video mode

Audio

Volume

- Press the ◀ to decrease the volume.
- Press the ▶ to increase the volume.

Treble

The treble setting controls the higher frequencies of your audio source.

- Press the ◀ to decrease the treble.
- Press the ▶ to increase the treble.

Bass

The Bass setting controls the lower frequencies of your audio source.

- Press the ◀ to decrease the bass.
- Press the ▶ to increase the bass.

Stereo / Mono

- Mono : Mono sound effect.
- Stereo : Stereo sound effect.

Mute

- Choose the left icon to make the volume function ineffective.
- Choose the right icon to make the volume function effective.

Language

Language

You can display the multilingual OSD menu . Use the ▲ and ▼ key to select the language you prefer.

Computer / Video mode

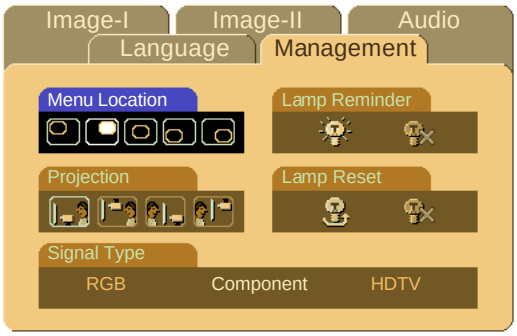

Management

Menu Location

Choose the Menu location on the display screen.

Projection

- **Front-Desktop**

  The factory default setting.

- **Rear-Desktop**

  When you select this function, the projector reverses the image so you can project behind a translucent screen.

- **Front-Ceiling**

  When you select this function, the projector turns the image upside down for ceiling-mounted projection.

- **Rear-Ceiling**

  When you select this function, the projector reverses and turns the image upside down at same time. You can project from behind a translucent screen with ceiling mounted projection.

Signal Type

Select signal type between RGB, HDTV and Component video sources.

Lamp Reminder

Choose this function to show or hide the warning message when the changing lamp message is displayed. The message will show up 30 hours before end of life.

Lamp Reset

Reset the lamp setting only when the new lamp is replaced.

Appendices

Troubleshooting

If you are experiencing trouble with the projector, refer to the following. If the problem persists, please contact your local dealer or our service center.

Problem: No image appears on screen.

- Ensure all the cables and power connections are correctly and securely connected as described in the “Installation” section.
- Ensure the pins of connectors are not crooked or broken.
- Check if the projection lamp has been securely installed. Please refer to the “Changing the lamp” section.
- Make sure you have removed the lens cap and the projector is switched on.

Problem: Partial, scrolling or incorrectly displayed image.

- Press the “Resync”button on the Remote Control.
- If you are using a PC:

  If the resolution of your computer is higher than 1024 x 768. Follow the steps outlined below to reset the resolution.

  For Windows 3.x:

  1. In the Windows Program Manager, click the “Windows Setup” icon in the Main group.
  2. Verify that your display resolution setting is less than or equal to 1024 x 768.

  For Windows 95:

  1. Open “My Computer” icon, the “Control Panel” folder, and then double click the “Display” icon.
  2. Select the “Setting” tab.
  3. In the “Desktop Area” you will find the resolution setting. Verify that the resolution setting is less than or equal to 1024 x 768 resolution.

If the projector is still not projecting the whole image, you will need to also change the monitor display you are using. Refer to the following steps.

4. Follow above steps 1~2. Click on the “Advanced Properties ” button.
5. Select the “Change” button under the “Monitor” tab .
6. Click on “ Show all devices ”. Then select “ Standard monitor types ” under the “ Manufactures ” box; choose the resolution mode you need under the “ Models” box.
7. Verify that the resolution setting of the monitor display is less than or equal to 1024 x 768.

- If you are using a Notebook PC:
  1. You are required to implement above steps of resolution setting of computer first.
  2. Switch the Notebook PC display to the “external display only” or “CRT only” mode.
- If you are experiencing difficulty in changing resolutions or your monitor freezes, restart all the equipment and the projector.

Problem: The screen of the Notebook or PowerBook computer is not displaying your presentation.

- If you are using Notebook PC:

  Some Notebook PCs may deactivate their own computers’ screens when a second display device is in use. Each of them has different way to be reactivated. Refer to your computer’s documentation for detailed information.
- If you are using an Apple PowerBook:

  In Control Panels, open the PowerBook Display to select Video Mirroring “On”.

Problem: Image is unstable or flickering

- Use “Tracking” to correct it.
- Change the monitor color setting from your computer.

Problem: Image has vertical flickering bar

- Use “Frequency” to make an adjustment.
- Check and reconfigure the display mode of your graphic card to make it compatible with the product.

Problem: Image is out of focus

- Adjust the Focus Ring on the projector lens.
- Make sure the projection screen is between the required distance 3.3ft.(1m)~ 39.4ft. (12m) from the projector.

Problem : The screen is outstretched when displaying 16:9 DVD.
The projector itself will automatically detect 16:9 DVD and adjust the aspect ratio by digitization to full screen with 4:3 default setting.

If the projector is still outstretched, you will also need to adjust the aspect ratio by referring to the following:

- Please select 4:3 aspect ratio type on your DVD player if you are playing a 16:9 DVD.
- If you can not select 4:3 aspect ratio type on your DVD player, please select 4:3 On Screen-Display(OSD) function of the projector for your display.

Problem: Image is reverse.

- To open “Menu” then selects “Management” to adjust the projection.

Problem: Lamp burns out or makes a popping sound

- When the lamp reaches its end of life, it will burn out and may make a loud popping sound. If this happens, the projector will not turn back on until the lamp module has been replaced. To replace the lamp, follow the procedures in the “Changing the Lamp”.

Changing the lamp

The projector will detect the lamp life itself. It will show you a warning message " Lamp is running out of standard lifetime. Be sure to replace the lamp as soon as possible." When you see this message, change the lamp as soon as possible.

Make sure the projector has been cooled down for at least 30 minutes before changing the lamp.

⚠ Warning: Lamp compartment is hot! Allow it to cool down before changing lamps!

Lamp Changing Procedure:

1. Turn off the power to the projector by pressing the Power/Standby button.
2. Allow the projector to cool down at least 30 minutes.
3. Disconnect the power cord.
4. Use screwdriver to remove the screw from the cover. ❶
5. Remove the cover. ❷
6. Remove the 5 screws from the lamp module. ❸
7. Pull out the lamp module.

To replace the lamp module, reverse the previous steps.

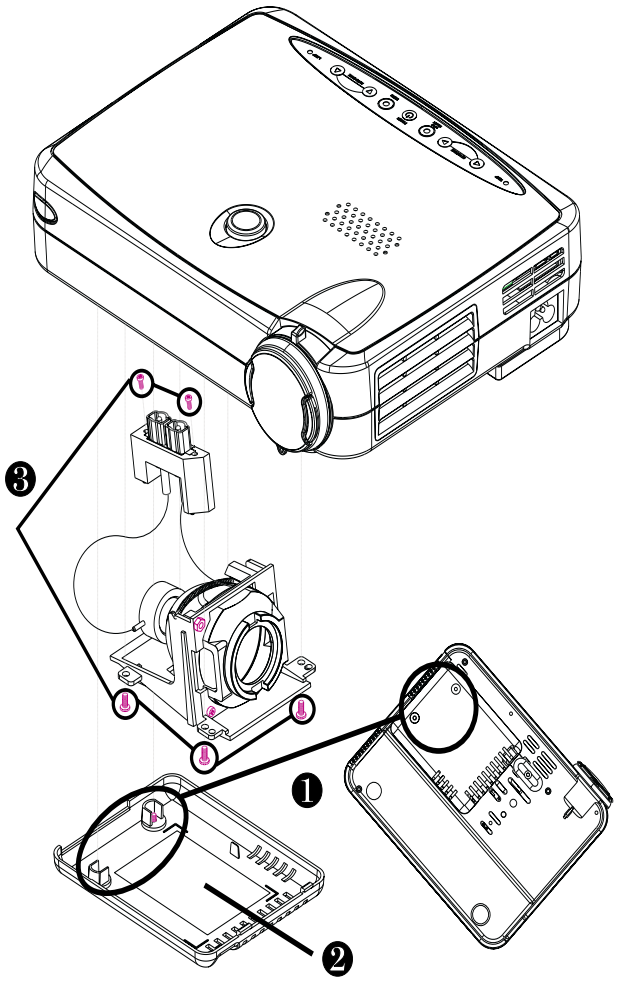

⚠ Warning: To reduce the risk of personal injury, do not drop the lamp module or touch the lamp bulb. The bulb may shatter and cause injury if it is dropped.

Specifications

Light Valve	-	Single Chip DLP™ Technology
Contrast Ratio	-	500:1 (Full On / Full Off)
Lamp	-	130W User Replaceable P-VIP Lamp
Number of Pixels	-	1024 pixels(H) X 768 lines(V)
Displayable Color	-	16.7M colors
Projection Lens	-	F2.2~2.4 f=28.51~34.21mm with 1.2 x zoom & focus
Projection Screen Size	-	20”~300” Diagonal
Projection Distance	-	3.3~39.4 ft (1m~12m)
Video Compatibility	-	NTSC/NTSC 4.43/PAL/PAL-M/PAL-N/SECAM and HDTV (1080i,720P,480i/P) compatible
	-	Composite video & S-Video capability
H. Frequency	-	15kHz~100kHz horizontal scan
V. Frequency	-	43Hz~120Hz vertical refresh
Multimedia Audio	-	One internal speaker with 2 watt output
Power Supply	-	Universal 100~240V AC 50/60 Hz
Power Consumption	-	180 watts at normal operation
I/O Connectors	-	Power: AC Power Input Socket
	-	Computer Input: One 30-pin DVI for analog/digital/component and HDTV signal
	-	Computer Output: One 15-pin D-sub computer Output
	-	Video Input: One Composite Video RCA Input One S-Video Input
	-	Audio Input: One Phone Jack for Audio Input
	-	Mouse Input : One 8-pin connector for remote mouse output (USB & RS232)
Weight	-	3.3 lbs. / 1.5 kgs
Dimensions (W x H x D)	-	2.0 x 6.9 x 8.9 inches / 52 x 176 x 225 mm
Environmental	-	Operating Temperature: 10°C~ 40°C/50°F~104°F
		Humidity: 80% maximum
	-	Storage Temperature: -20°C~60°C/ -4°F~140°F
		Humidity: 80% maximum
Safety Regulation	-	FCC,CE,VCCI,UL,CUL,TÜV

Compatibility Modes

Mode	Resolution	(ANALOG)		(DIGITAL)	
		V.Frequency (Hz)	H.Frequency (kHz)	V.Frequency (Hz)	H.Frequency (kHz)
VESA VGA	640 X 350	70	31.5	70	31.5
VESA VGA	640 X 350	85	37.9	85	37.9
VESA VGA	640 X 400	70	31.5	70	31.5
VESA VGA	640 X 400	85	37.9	85	37.9
VESA VGA	640 X 480	60	31.5	60	31.5
VESA VGA	640 X 480	72	37.9	72	37.9
VESA VGA	640 X 480	75	37.5	75	37.5
VESA VGA	640 X 480	85	43.3	85	43.3
VESA VGA	720 X 400	70	31.5	70	31.5
VESA VGA	720 X 400	85	37.9	85	37.9
SVGA	800 X 600	56	35.2	56	35.2
SVGA	800 X 600	60	37.9	60	37.9
SVGA	800 X 600	72	48.1	72	48.1
SVGA	800 X 600	75	46.9	75	46.9
SVGA	800 X 600	85	53.7	85	53.7
VESA XGA	1024 X 768	43	35.5	43	35.5
VESA XGA	1024 X 768	60	48.4	60	48.4
VESA XGA	1024 X 768	70	56.5	70	56.5
VESA XGA	1024 X 768	75	60.0	75	60.0
VESA XGA	1024 X 768	85	68.7	-	-
* VESA SXGA	1280 X 1024	60	63.98	-	-
* VESA SXGA	1280 X 1024	75	79.98	-	-
MAC LC13"	640 X 480	66.66	34.98	-	-
MAC Ⅱ 13"	640 X 480	66.68	35	-	-
MAC 16"	832 X 624	74.55	49.725	-	-
MAC 19"	1024 X 768	75	60.24	-	-
* MAC	1152 X 870	75.06	68.68	-	-
MAC G4	640 X 480	60	31.35	-	-
MAC G4	640 X 480	120	68.03	-	-
MAC G4	1024 X 768	120	97.09	-	-
I MAC DV	640 X 480	117	60	-	-
I MAC DV	800 X 600	95	60	-	-
I MAC DV	1024 X 768	75	60	-	-
* I MAC DV	1280 X 1024	85	90.9	-	-
* I MAC DV	1280 X 960	75	75	-	-
NEC PC-98 SERIES	640 X 400	56.42	24.83	-	-
NEC PC-98 SERIES	640 X 480	70	31.5	-	-
NEC PC-98 SERIES	640 X 480	60	31.5	-	-
FUJTSU FM-TOWN	640 X 480	55.37	24.37	-	-
FUJSTSU FM-TOWN	640 X 480	60	31.5	-	-

* compression computer image.