USA's primary source for projector lamps
myprojectorlamps

PROJECTOR OWNER'S MANUAL

Optoma

UHD550X / UHD60 / UHD65

Need a replacement lamp for this projector?

www.myprojectorlamps.com

Original manufacturer manual, provided unmodified as a courtesy of MyProjectorLamps.com.
All trademarks belong to their respective owners.

Optoma

DLP® Projector

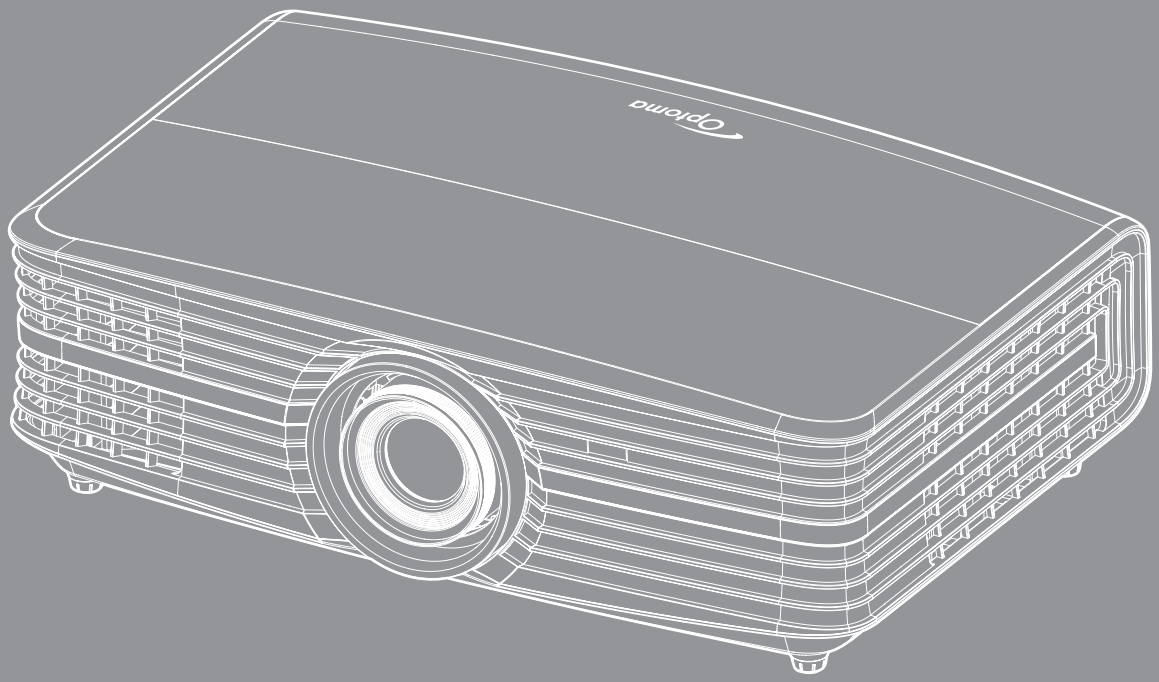

User manual

MHL HDMI™ HIGH DEFINITION MULTIMEDIA INTERFACE PICTURE BY DLP® TEXAS INSTRUMENTS 4K UHD

TABLE OF CONTENTS

SAFETY 4

Important Safety Instruction 4
Copyright 6
Disclaimer 6
Trademark Recognition 6
FCC 6
Declaration of Conformity for EU countries 7
WEEE 7

INTRODUCTION 8

Package Overview 8
Standard accessories 8
Optional accessories 8
Product Overview 9
Connections 10
Keypad 10
Remote control 12

SETUP AND INSTALLATION 13

Installing the projector 13
Connecting sources to the projector 14
Adjusting the projector image 15
Remote setup 16

USING THE PROJECTOR 18

Powering on / off the projector 18
Selecting an input source 19

USING THE PROJECTOR 20

Menu navigation and features 20
OSD Menu tree 21
Display image settings menu 29
Display aspect ratio menu 31
Display edge mask menu 33
Display digital zoom menu 33
Display image shift menu 33
Audio internal speaker menu 33
Audio mute menu 33
Audio volume menu 33
Setup projection menu 34
Setup lamp settings menu 34
Setup filter settings menu 34

Setup power settings menu *34*
Setup security menu *35*
Setup test pattern menu *35*
Setup remote settings menu *35*
Setup projector ID menu *35*
Setup 12V trigger menu *36*
Setup options menu *36*
Setup reset OSD menu *37*
Network LAN menu *37*
Network control menu *38*
Setup network control settings menu *39*
Info menu *44*

MAINTENANCE 45

Replacing the lamp *45*
Installing and cleaning the dust filter *47*

ADDITIONAL INFORMATION 48

Compatible resolutions *48*
Image size and projection distance *50*
Projector dimensions and ceiling mount installation *52*
IR remote codes *53*
Troubleshooting *55*
Warning indicators *57*
Specifications *59*
Optoma global offices *60*

SAFETY

	The lightning flash with arrow head within an equilateral triangle is intended to alert the user to the presence of uninsulated "dangerous voltage" within the product's enclosure that may be of sufficient magnitude to constitute a risk of electric shock to persons.
	The exclamation point within an equilateral triangle is intended to alert the user to the presence of important operating and maintenance (servicing) instructions in the literature accompanying the appliance.

Please follow all warnings, precautions and maintenance as recommended in this user's guide.

Important Safety Instruction

- To prolong the effective life of the lamp, make sure to keep the lamp on for at least 60 seconds and avoid performing force shutdown.
- 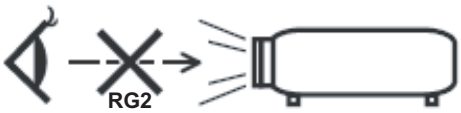

Do not stare into the beam, RG2.
As with any bright source, do not stare into the direct beam, RG2 IEC 62471-5:2015.
- Do not block any ventilation openings. To ensure reliable operation of the projector and to protect from over heating, it is recommended to install the projector in a location that does not block ventilation. As an example, do not place the projector on a crowded coffee table, sofa, bed, etc. Do not put the projector in an enclosure such as a book case or a cabinet that restricts air flow.
- To reduce the risk of fire and/or electric shock, do not expose the projector to rain or moisture. Do not install near heat sources such as radiators, heaters, stoves or any other apparatus such as amplifiers that emits heat.
- Do not let objects or liquids enter the projector. They may touch dangerous voltage points and short out parts that could result in fire or electric shock.
- Do not use under the following conditions:
  - In extremely hot, cold or humid environments.
    - (i) Ensure that the ambient room temperature is within 5°C ~ 40°C
    - (ii) Relative humidity is 10% ~ 85%
  - In areas susceptible to excessive dust and dirt.
  - Near any appliance generating a strong magnetic field.
  - In direct sunlight.
- Do not use the projector in places where flammable gases or explosives gases may be present in the atmosphere. The lamp inside the projector becomes very hot during operation and the gases may ignite and result in a fire.
- Do not use the unit if it has been physically damaged or abused. Physical damage/abuse would be (but not limited to):
  - Unit has been dropped.
  - Power supply cord or plug has been damaged.
  - Liquid has been spilled on to the projector.
  - Projector has been exposed to rain or moisture.
  - Something has fallen in the projector or something is loose inside.
- Do not place the projector on an unstable surface. The projector may fall over resulting in injury or the projector may become damaged.

- Do not block the light coming out of the projector lens when in operation. The light will heat the object and my melt, cause burns or start a fire.
- Please do not open or disassemble the projector as this may cause electric shock.
- Do not attempt to service the unit yourself. Opening or removing covers may expose you to dangerous voltages or other hazards. Please call Optoma before you send the unit for repair.
- See projector enclosure for safety related markings.
- The unit should only be repaired by appropriate service personnel.
- Only use attachments/accessories specified by the manufacturer.
- Do not look into straight into the projector lens during operation. The bright light may harm your eyes.
- When replacing the lamp, please allow the unit to cool down. Follow instructions as described on pages *45-46*.
- This projector will detect the life of the lamp itself. Please be sure to change the lamp when it shows warning messages.
- Reset the "Lamp Reset" function from the on-screen display "Setup lamp settings" menu after replacing the lamp module.
- When switching the projector off, please ensure the cooling cycle has been completed before disconnecting power. Allow 90 seconds for the projector to cool down.
- When the lamp is approaching to the end of its life time, the message "Lamp life exceeded." will show on the screen. Please contact your local reseller or service center to change the lamp as soon as possible.
- Turn off and unplug the power plug from the AC outlet before cleaning the product.
- Use a soft dry cloth with mild detergent to clean the display housing. Do not use abrasive cleaners, waxes or solvents to clean the unit.
- Disconnect the power plug from AC outlet if the product is not being used for a long period of time.

Note: *When the lamp reaches the end of its life, the projector will not turn back on until the lamp module has been replaced. To replace the lamp, follow the procedures listed under "Replacing the Lamp" section on pages 45-46.*

- *Do not setup the projector in places where it might be subjected to vibration or shock.*
- *Do not touch the lens with bare hands*
- *Remove battery/batteries from remote control before storage. If the battery/batteries are left in the remote for long periods, they may leak.*
- *Do not use or store the projector in places where smoke from oil or cigarettes may be present, as it can adversely affect the quality of the projector performance.*
- *Please follow the correct projector orientation installation as non standard installation may affect the projector performance.*
- *Use a power strip and or surge protector. As power outages and brown-outs can KILL devices*.

Copyright

This publication, including all photographs, illustrations and software, is protected under international copyright laws, with all rights reserved. Neither this manual, nor any of the material contained herein, may be reproduced without written consent of the author.

© Copyright 2017

Disclaimer

The information in this document is subject to change without notice. The manufacturer makes no representations or warranties with respect to the contents hereof and specifically disclaims any implied warranties of merchantability or fitness for any particular purpose. The manufacturer reserves the right to revise this publication and to make changes from time to time in the content hereof without obligation of the manufacturer to notify any person of such revision or changes.

Trademark Recognition

Kensington is a U.S. registered trademark of ACCO Brand Corporation with issued registrations and pending applications in other countries throughout the world.

HDMI, the HDMI Logo, and High-Definition Multimedia Interface are trademarks or registered trademarks of HDMI Licensing LLC in the United States and other countries.

DLP®, DLP Link and the DLP logo are registered trademarks of Texas Instruments and BrilliantColor™ is a trademark of Texas Instruments.

All other product names used in this manual are the properties of their respective owners and are Acknowledged.

MHL, Mobile High-Definition Link and the MHL Logo are trademarks or registered trademarks of MHL Licensing, LLC.

FCC

This device has been tested and found to comply with the limits for a Class B digital device pursuant to Part 15 of the FCC rules. These limits are designed to provide reasonable protection against harmful interference in a residential installation. This device generates, uses and can radiate radio frequency energy and, if not installed and used in accordance with the instructions, may cause harmful interference to radio communications.

However, there is no guarantee that interference will not occur in a particular installation. If this device does cause harmful interference to radio or television reception, which can be determined by turning the device off and on is encouraged to try to correct the interference by one or more of the following measures:

- Reorient or relocate the receiving antenna.
- Increase the separation between the device and receiver.
- Connect the device into an outlet on a circuit different from that to which the receiver is connected.
- Consult the dealer or an experienced radio/television technician for help.

Notice: Shielded cables

All connections to other computing devices must be made using shielded cables to maintain compliance with FCC regulations.

Caution

Changes or modifications not expressly approved by the manufacturer could void the user's authority, which is granted by the Federal Communications Commission, to operate this projector.

Operation Conditions

This device complies with Part 15 of the FCC Rules. Operation is subject to the following two conditions:

1. This device may not cause harmful interference and

2. This device must accept any interference received, including interference that may cause undesired operation.

Notice: Canadian users

This Class B digital apparatus complies with Canadian ICES-003.

Remarque à l'intention des utilisateurs canadiens

Cet appareil numerique de la classe B est conforme a la norme NMB-003 du Canada.

Declaration of Conformity for EU countries

- EMC Directive 2014/30/EC (including amendments)
- Low Voltage Directive 2014/35/EC
- R & TTE Directive 1999/5/EC (if product has RF function)

WEEE

Disposal instructions

Do not throw this electronic device into the trash when discarding. To minimize pollution and ensure utmost protection of the global environment, please recycle it.

INTRODUCTION

Package Overview

Carefully unpack and verify that you have the items listed below under standard accessories. Some of the items under optional accessories may not be available depending on the model, specification and your region of purchase. Please check with your place of purchase. Some accessories may vary from region to region.

The warranty card is only supplied in some specific regions. Please consult your dealer for detailed information.

Standard accessories

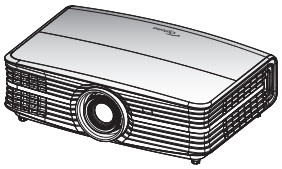

Projector

Remote control

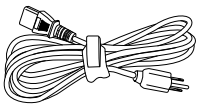

Power lead

- ☑ Warranty Card*
- ☑ Basic User Manual

Documentation

Note:

- *The remote control is shipped with the battery.*
- ** For European warranty Information, please visit www.optoma.com.*

Optional accessories

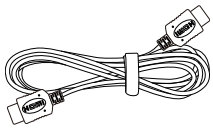

HDMI cable

Lens cap

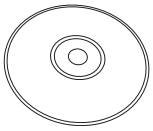

CD user manual

Note: *Optional accessories vary depending on model, specification and region.*

INTRODUCTION

Product Overview

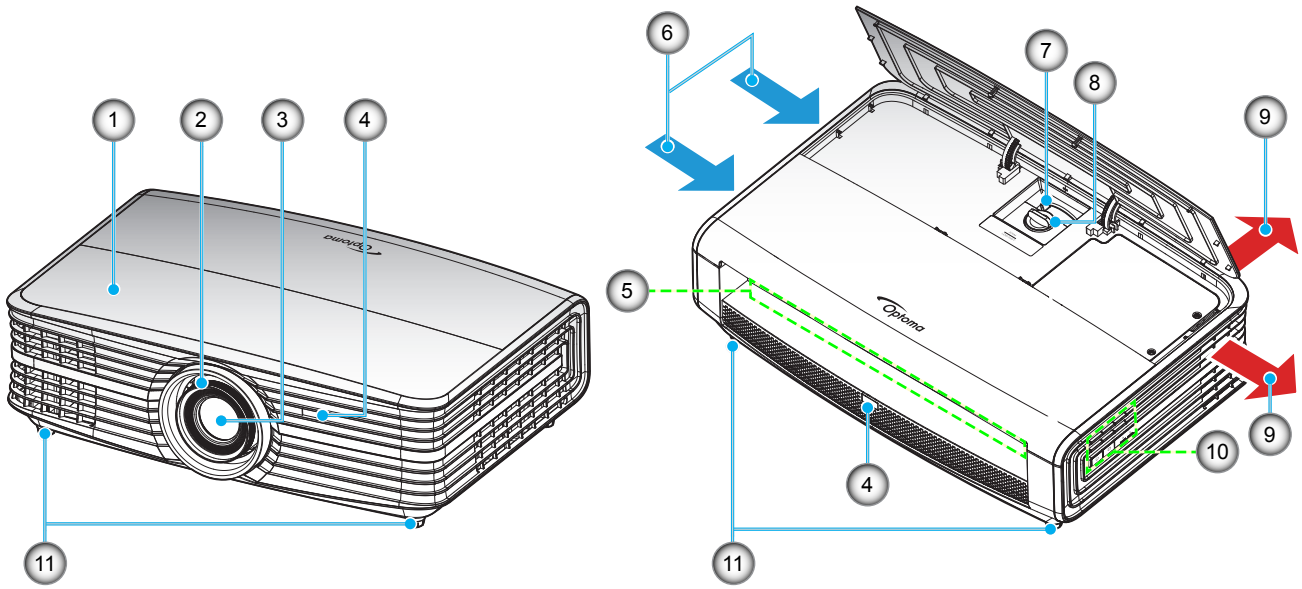

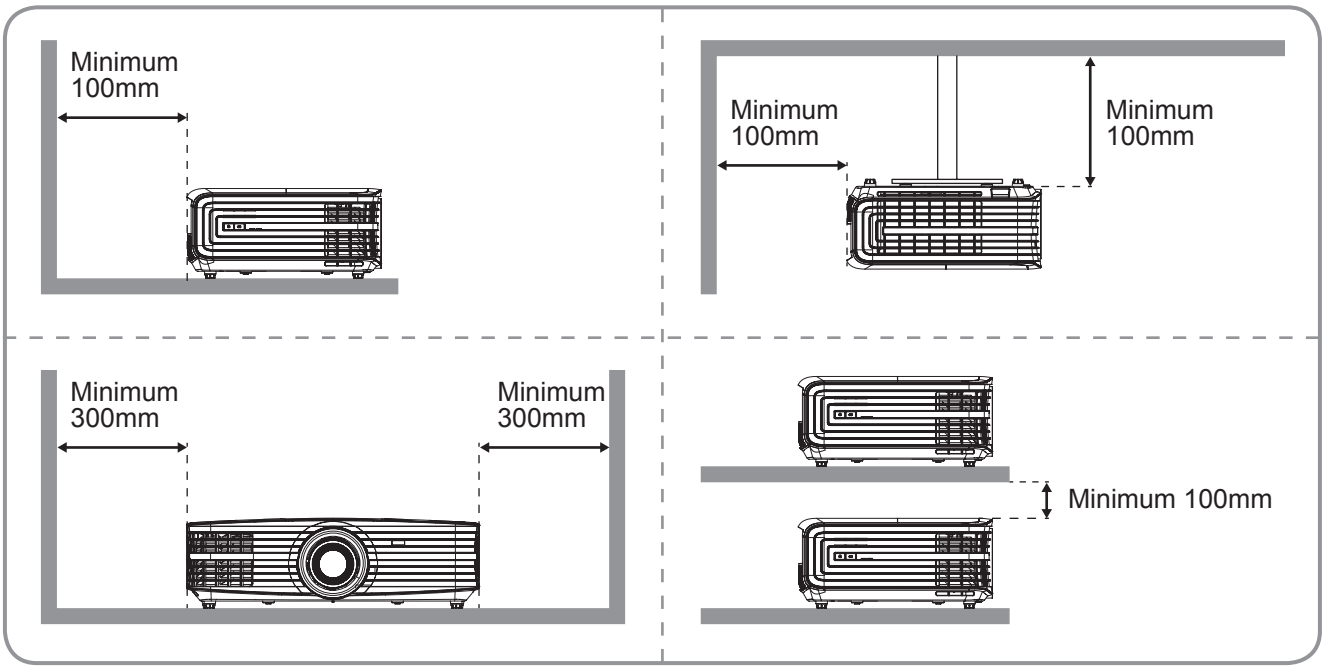

Note:

- *Do not block projector intake and exhaust vents.*
- *When operating the projector in an enclosed space, allow at least 30 cm clearance around the intake and exhaust vents.*

No	Item	No	Item
1.	Top Cover	7.	Zoom Lever
2.	Focus Ring	8.	Lens Shift Dial
3.	Lens	9.	Ventilation (outlet)
4.	IR Receiver	10.	Keypad
5.	Input / Output	11.	Tilt-Adjustment Foot
6.	Ventilation (inlet)		

INTRODUCTION

Connections

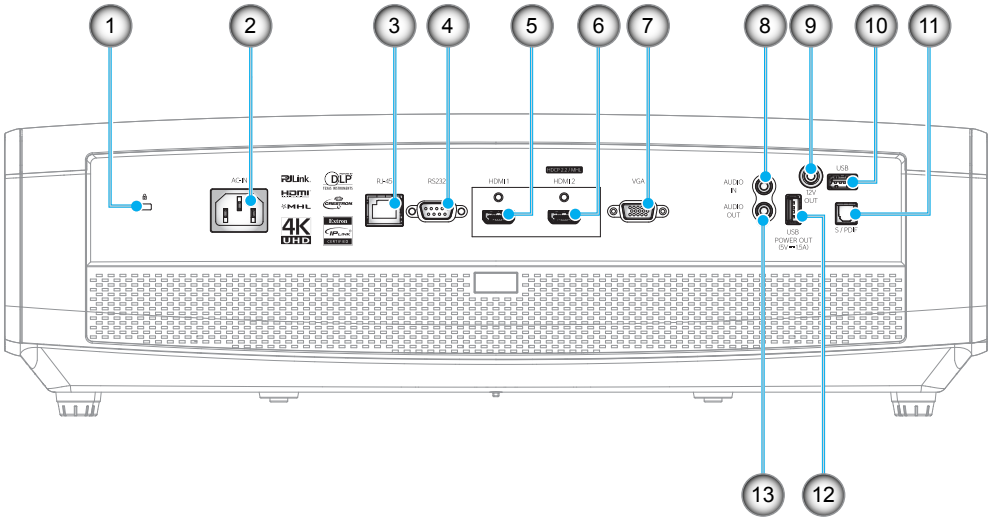

No	Item	No	Item
1.	Kensington™ Lock Port	8.	AUDIO IN Connector
2.	Power Socket	9.	12V OUT Connector
3.	RJ-45 Connector	10.	USB Type A / Service Connector
4.	RS232 Connector	11.	S/PDIF Connector
5.	HDMI 1 Connector	12.	USB Power Out (5V⎓1.5A)
6.	HDMI 2 (HDCP2.2) / MHL Connector (*)	13.	AUDIO OUT Connector
7.	VGA Connector		

Note:

- *USB Type A supports mouse / service capability.*
- *Remote mouse requires special remote control.*
- *(*)Only HDMI 2 (HDCP2.2) connector supports 4K (Ultra HD) at 60Hz refresh rate.*

Keypad

INTRODUCTION

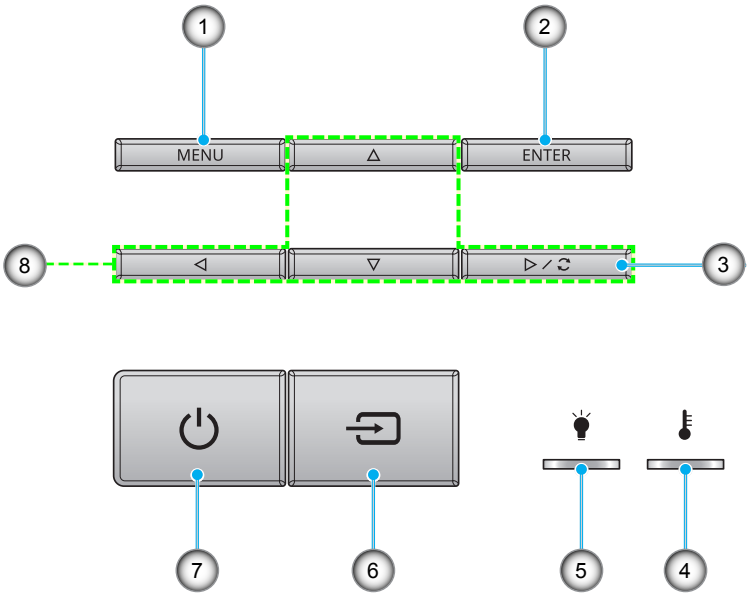

No	Item	No	Item
1.	Menu	5.	Lamp LED
2.	Enter	6.	Source
3.	Re-Sync	7.	Power and On/Standby LED
4.	Temp LED	8.	Four Directional Select Keys

INTRODUCTION

Remote control

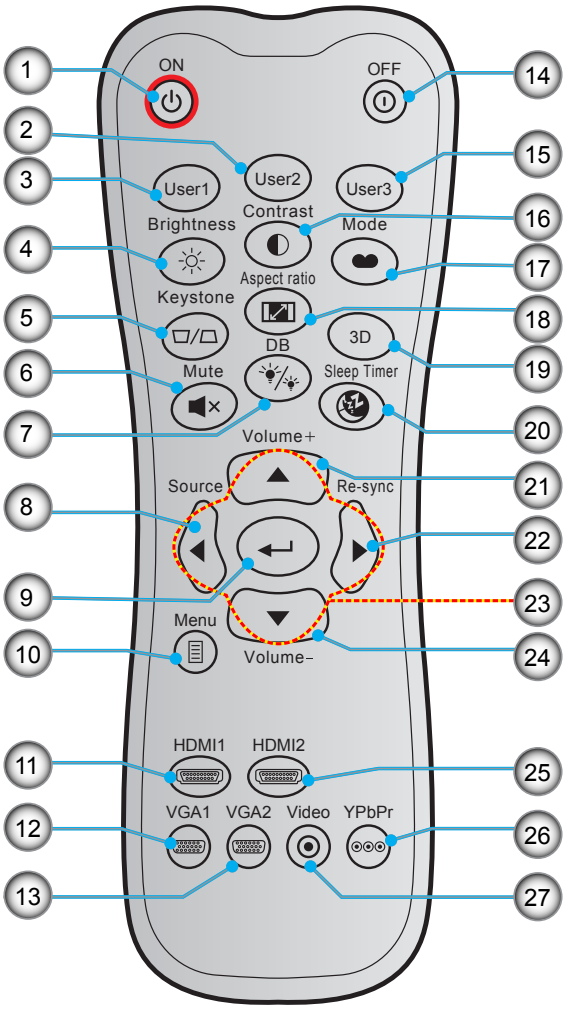

No	Item	No	Item
1.	Power On	15.	User 3
2.	User 2	16.	Contrast
3.	User 1	17.	Display Mode
4.	Brightness	18.	Aspect Ratio
5.	Keystone (not supported)	19.	3D Menu On / Off (not supported)
6.	Mute	20.	Sleep Timer
7.	DB (Dynamic Black)	21.	Volume +
8.	Source	22.	Re-Sync
9.	Enter	23.	Four Directional Select Keys
10.	Menu	24.	Volume -
11.	HDMI1	25.	HDMI2
12.	VGA1	26.	YPbPr (not supported)
13.	VGA2 (not supported)	27.	Video (not supported)
14.	Power Off		

Note: *Some keys may have no function for models that do not support these features.*

SETUP AND INSTALLATION

Installing the projector

Your projector is designed to be installed in one of four possible positions.

Your room layout or personal preference will dictate which installation location you select. Take into consideration the size and position of your screen, the location of a suitable power outlet, as well as the location and distance between the projector and the rest of your equipment.

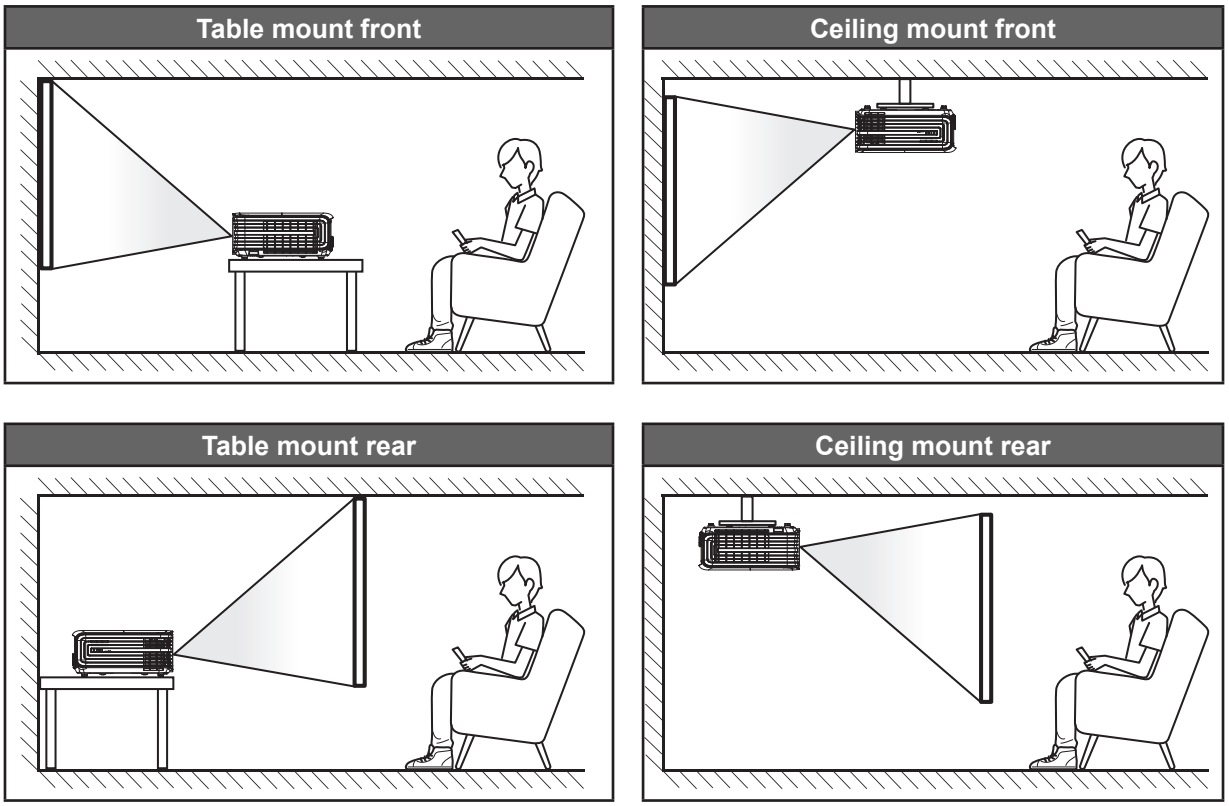

Projector should be placed flat on a surface and 90 degrees / perpendicular to the screen.

- How to determine projector location for a given screen size, please refer to distance table on pages *50-51*.
- How to determine screen size for a given distance, please refer to distance table on pages *50-51*.

Note: *The further away the projector is placed from the screen the projected image size increases and vertical offset also increases proportionally.*

IMPORTANT!

Do not operate the projector in any orientation other that table top or ceiling mount. The projector should be horizontal and not tilted either forwards/backwards or left/right. Any other orientation will invalidate the warranty and may shorten the lifetime of the projector lamp or the projector itself. For none standard installation advise please contact Optoma.

SETUP AND INSTALLATION

Connecting sources to the projector

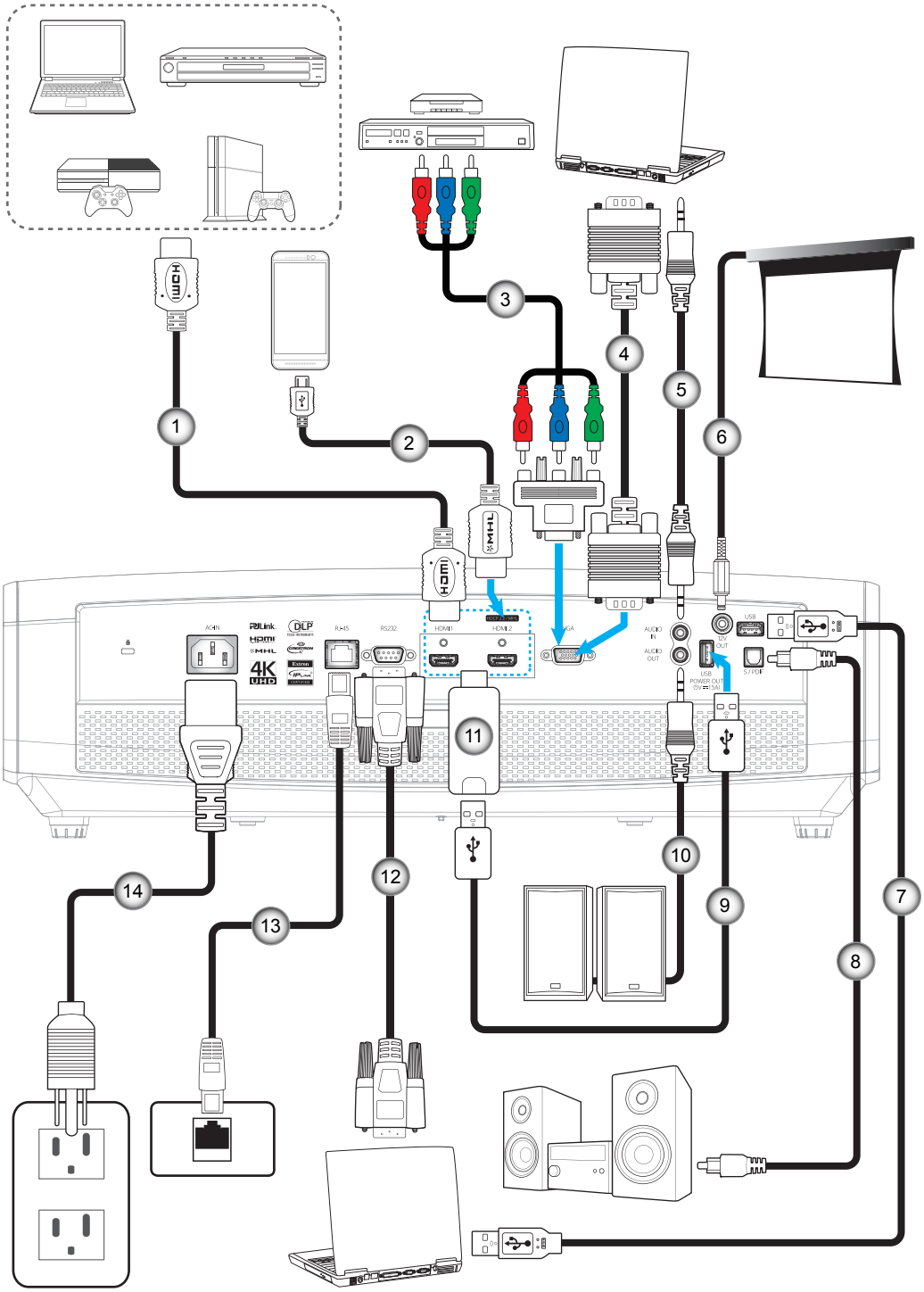

No	Item	No	Item
1.	HDMI Cable	8.	S/PDIF Out Cable
2.	HDMI / MHL Cable	9.	USB Power Cable
3.	RCA Component Cable	10.	Audio Out Cable
4.	VGA In Cable	11.	HDMI Dongle
5.	Audio In Cable	12.	RS232 Cable
6.	12V DC Jack	13.	RJ-45 Cable
7.	USB Cable	14.	Power Cord

SETUP AND INSTALLATION

Adjusting the projector image

Image height

The projector is equipped with elevator feet for adjusting the image height.

1. Locate the adjustable foot you wish to adjust on the underside of the projector.
2. Rotate the adjustable foot clockwise or counterclockwise to raise or lower the projector.

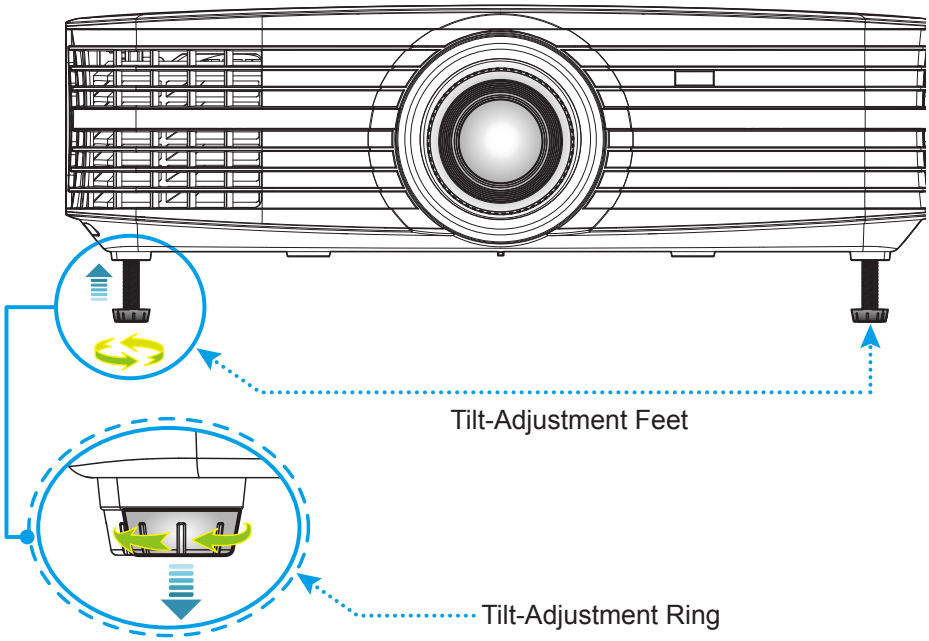

Zoom, lens shift, and focus

- To adjust the image size and position, do the following:

  a. Push down firmly on the middle of the top cover to unlock the latch. Then open the top cover.

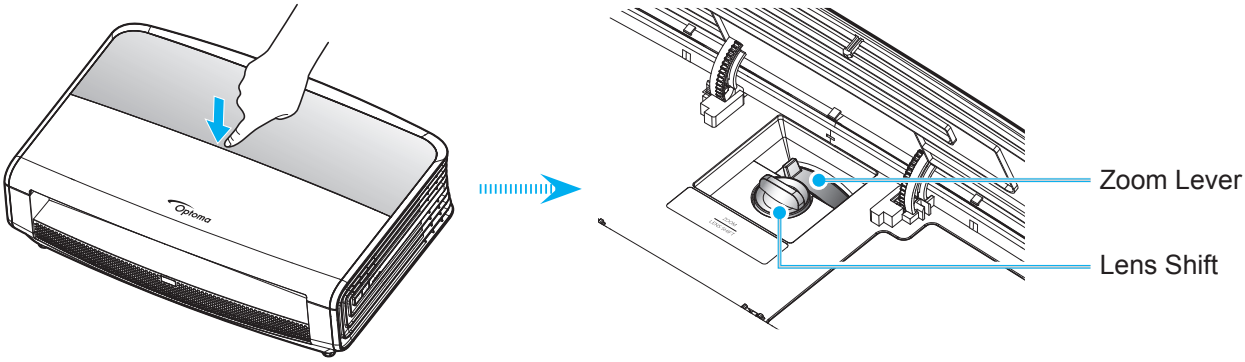

  b. To adjust the image size, turn the zoom lever clockwise or counterclockwise to increase or decrease the projected image size.

  c. To adjust the image position, turn the lens shift dial clockwise or counterclockwise to adjust the position of the projected image vertically.

- To adjust the focus, turn the focus ring clockwise or counterclockwise until the image is sharp and legible.

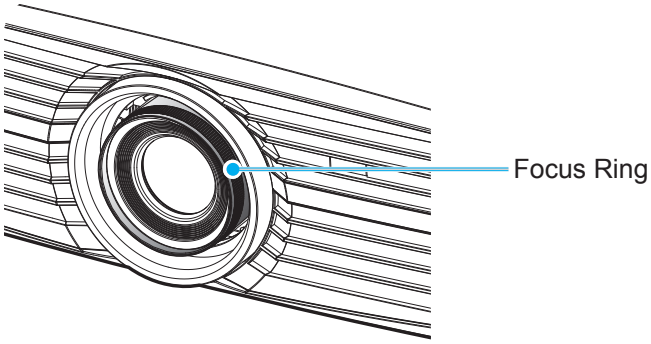

Note: *The projector will focus at a distance of 1.3m to 9.3m.*

Remote setup

Installing / replacing the batteries

Two AAA size batteries are supplied for the remote control.

1. Remove the battery cover on the back of the remote control.
2. Insert AAA batteries in the battery compartment as illustrated.
3. Replace back cover on remote control.

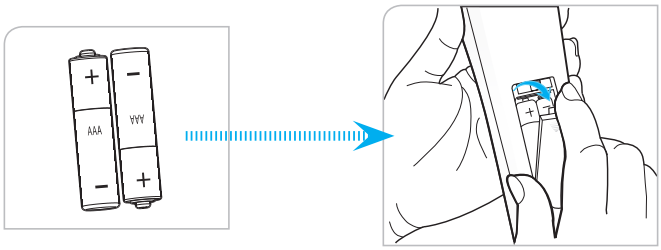

Note: *Replace only with the same or equivalent type batteries.*

CAUTION

Improper use of batteries can result in chemical leakage or explosion. Be sure to follow the instructions below.

- Do not mix batteries of different types. Different types of batteries have different characteristics.
- Do not mix old and new batteries. Mixing old and new batteries can shorten the life of new batteries or cause chemical leakage in old batteries.
- Remove batteries as soon as the are depleted. Chemicals that leak from batteries that come in contact with skin can cause a rash. If you find any chemical leakage, wipe thoroughly with a cloth.
- The batteries supplied with this product may have a shorter life expectancy due to storage conditions.
- If you will not be using the remote control for an extended period of time, remove the batteries.
- When you dispose of the batteries, you must obey the law in the relative area or country.

SETUP AND INSTALLATION

Effective range

Infra-Red (IR) remote control sensor is located on the front side and rear side of the projector. Ensure to hold the remote control at an angle within 30 degrees perpendicular to the projector's IR remote control sensor to function correctly. The distance between the remote control and the sensor should not be longer than 7 meters (~ 23 feet).

- Make sure that there are no obstacles between the remote control and the IR sensor on the projector that might obstruct the infra-red beam.
- Make sure the IR transmitter of the remote control is not being shined by sunlight or fluorescent lamps directly.
- Please keep the remote controller away from fluorescent lamps for over 2 meters or the remote controller might become malfunction.
- If the remote control is closed to Inverter-Type fluorescent lamps, it might become ineffective from time to time.
- If the remote control and the projector are within a very short distance, the remote control might become ineffective.
- When you aim at the screen, the effective distance is less than 5 meters from the remote control to the screen and reflecting the IR beams back to the projector. However, the effective range might change according to screens.

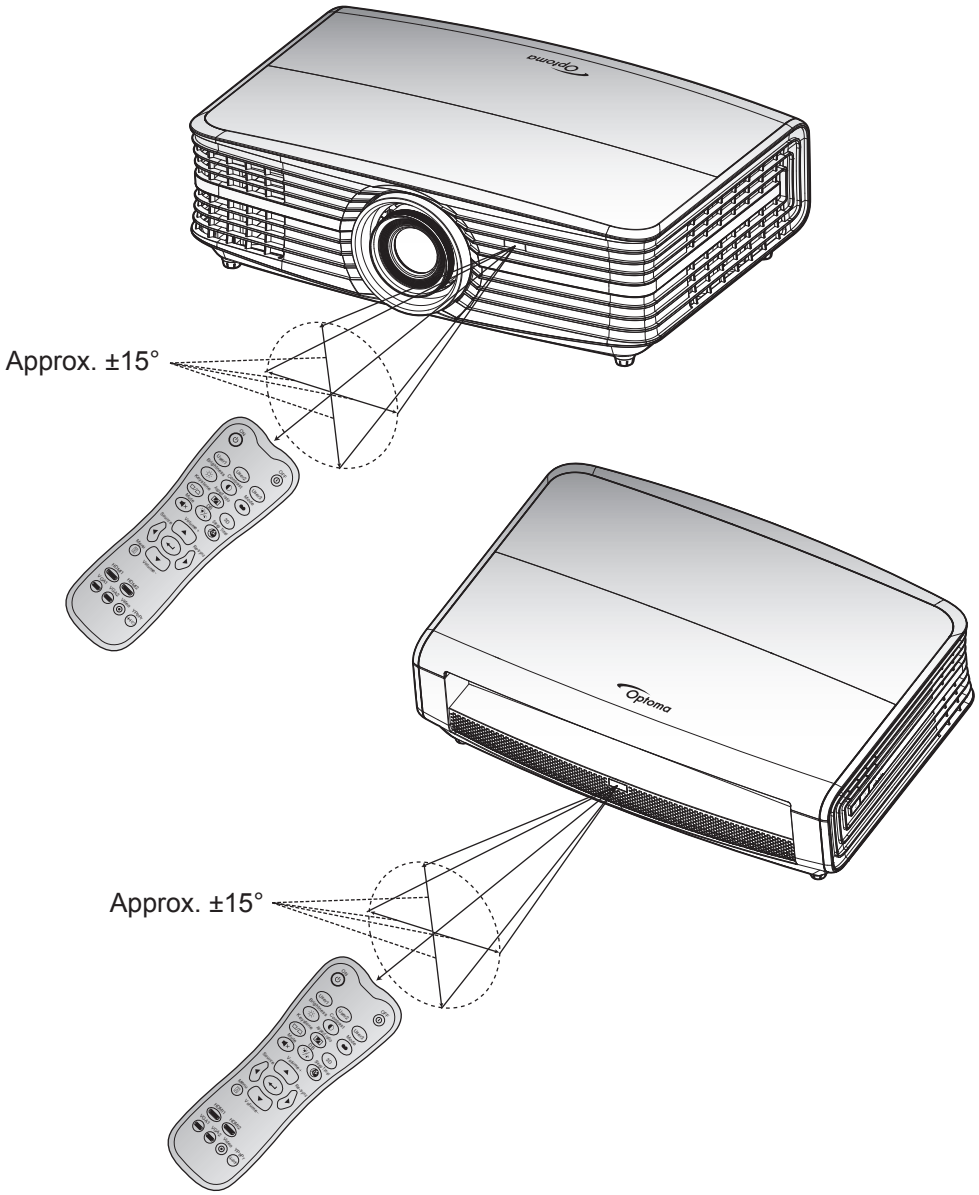

USING THE PROJECTOR

Powering on / off the projector

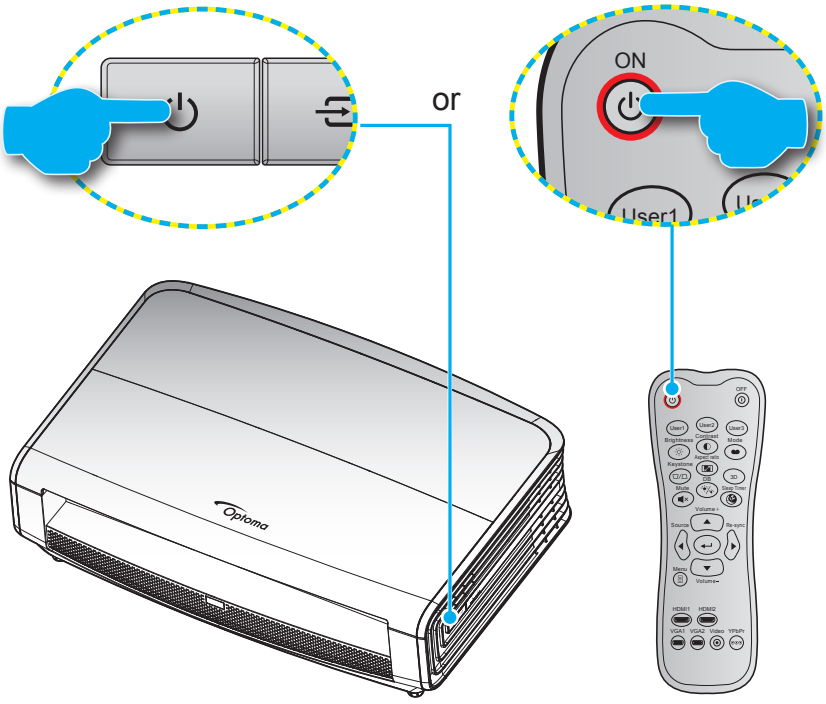

Powering on

1. Securely connect the power lead and signal/source cable. When connected, the On/Standby LED will turn red.
2. Turn on the projector by pressing the "⏻" on the projector keypad or the remote control.
3. A start up screen will display in approximately 10 seconds and the On/Standby LED will be flashing blue.

Note: *The first time the projector is turned on, you will be prompted to select the preferred language, projection orientation, and other settings.*

Powering off

1. Turn off the projector by pressing the "⏻" on the projector keypad or the "⏽" on the remote control.
2. The following message will be displayed:

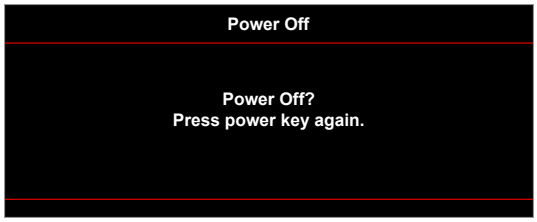

3. Press the "⏻" or the "⏽" button again to confirm, otherwise the message will disappear after 15 seconds. When you press the "⏻" or the "⏽" button for the second time, the projector will shut down.
4. The cooling fans will continue to operate for about 10 seconds for the cooling cycle and the On/Standby LED will flash green or flash blue. When the On/Standby LED turns solid red, this indicates the projector has entered standby mode. If you wish to turn the projector back on, you must wait until the cooling cycle has finished and the projector has entered standby mode. When the projector is in standby mode, simply press the "⏻" button again to turn on the projector.
5. Disconnect the power lead from the electrical outlet and the projector.

Note: *It is not recommended that the projector is turned on immediately, right after a power off procedure.*

USING THE PROJECTOR

Selecting an input source

Turn on the connected source that you want to display on the screen, such as computer, notebook, video player, etc. The projector will automatically detect the source. If multiple sources are connected, push the source button on the projector keypad or the remote control to select the desired input.

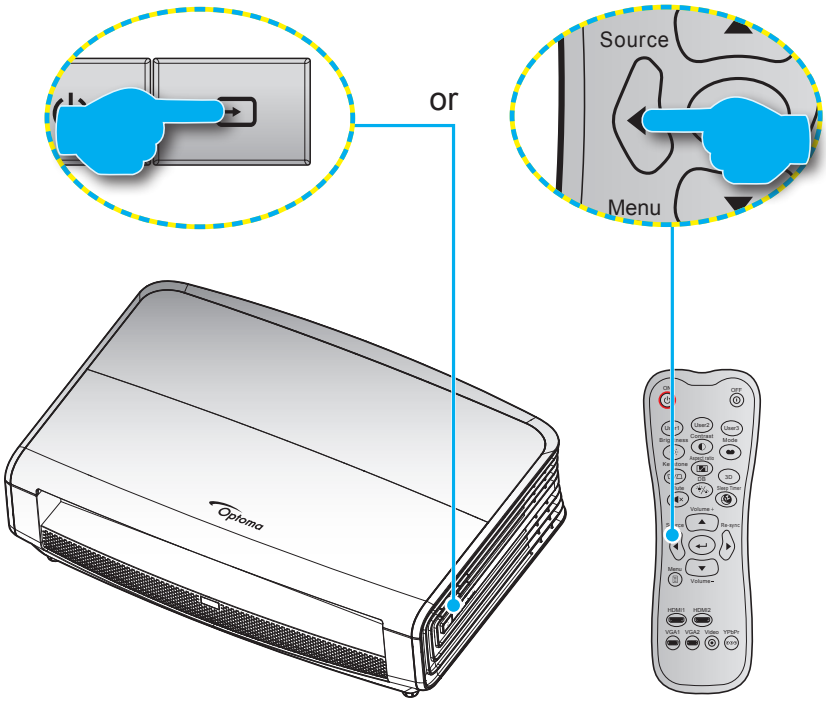

USING THE PROJECTOR

Menu navigation and features

The projector has multilingual on-screen display menus that allow you to make image adjustments and change a variety of settings. The projector will automatically detect the source.

1. To open the OSD menu, press ☰ on the remote control or the projector keyboard.
2. When OSD is displayed, use ▲▼ keys to select any item in the main menu. While making a selection on a particular page, press ↵ or ▶ key to enter sub menu.
3. Use ◀▶ keys to select the desired item in the sub menu and then press ↵ or ▶ key to view further settings. Adjust the settings by using ◀▶ keys.
4. Select the next item to be adjusted in the sub menu and adjust as described above.
5. Press the ↵ or ▶ to confirm, and the screen will return to the main menu.
6. To exit, press the ◀ or ☰ again. The OSD menu will close and the projector will automatically save the new settings.

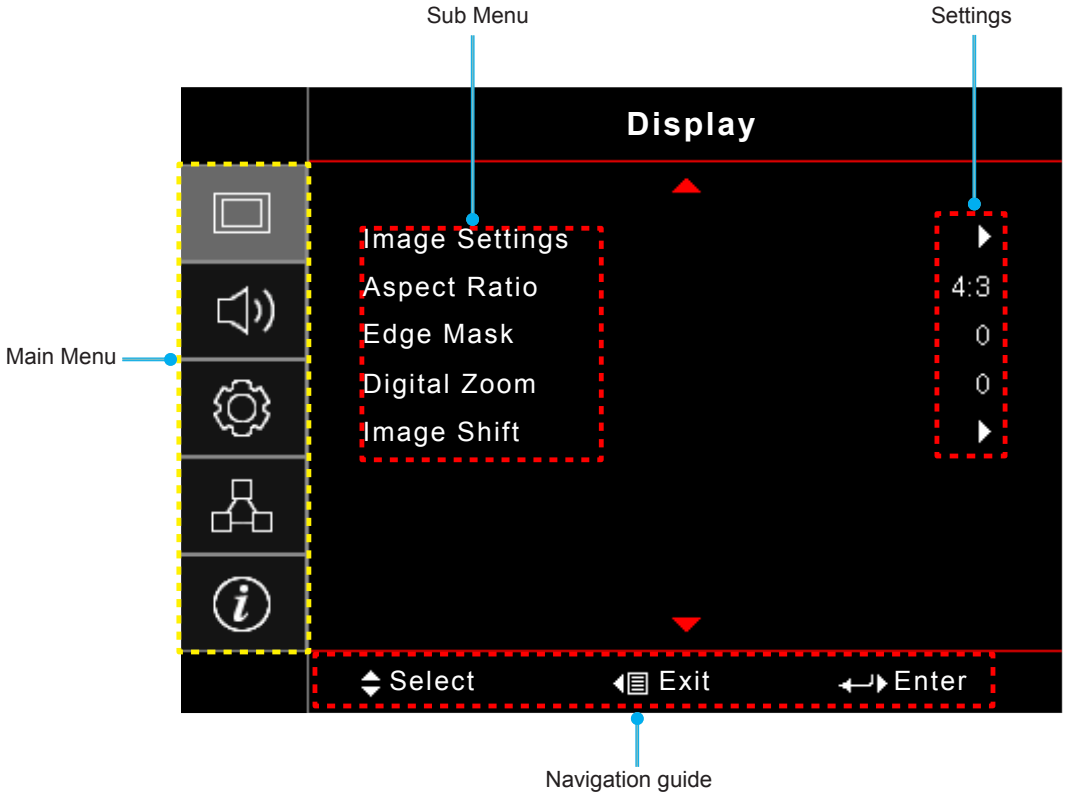

USING THE PROJECTOR

OSD Menu tree

Main Menu	Sub Menu	Sub Menu 2	Sub Menu 3	Sub Menu 4	Values
Display	Image Settings	Display Mode			Cinema
					HDR
					Vivid
					Game
					Reference
					Bright
					User
					ISF Day
					ISF Night
		Wall Color			Off [Default]
					Blackboard
					Light Yellow
					Light Green
					Light Blue
					Pink
					Gray
		Dynamic Range	HDR		Off
					SDR->HDR
					Auto [Default]
			HDR Effect		Bright
					Standard [Default]
					Film
					Detail
		Brightness			-50 ~ 50
		Contrast			-50 ~ 50
		Sharpness			1 ~ 15
		Color			-50 ~ 50
		Tint			-50 ~ 50
		Gamma	Film		
			Video		
			Graphics		
			Standard(2.2)		
			1.8		
			2.0		
			2.4		
		Color Settings	BrilliantColor™		1 ~ 10

Main Menu	Sub Menu	Sub Menu 2	Sub Menu 3	Sub Menu 4	Values
Display	Image Settings	Color Settings	Color Temperature		D55
					D65
					D75
					D83
					D93
					Native
			Color Gamut		Native
					HDTV
					Presentation
					Cinema
					Game
			CMS	Color	R [Default]
					G
					B
					C
					Y
					M
					W
				x offset	-50 ~ 50 [Default:0]
				y offset	-50 ~ 50 [Default:0]
				Brightness	-50 ~ 50 [Default:0]
				Reset	Cancel [Default]
					Yes
				Exit	
			RGB Gain/Bias	Red Gain	-50 ~ 50
				Green Gain	-50 ~ 50
				Blue Gain	-50 ~ 50
				Red Bias	-50 ~ 50
				Green Bias	-50 ~ 50
				Blue Bias	-50 ~ 50
				Reset	Cancel [Default]
					Yes
				Exit	
			Color Space [Not HDMI Input]		Auto [Default]
					RGB
					YUV
			Color Space [HDMI Input]		Auto [Default]
					RGB(0~255)
					RGB(16~235)
					YUV

Main Menu	Sub Menu	Sub Menu 2	Sub Menu 3	Sub Menu 4	Values
Display	Image Settings	Signal [RGB/ Component Input]	Automatic		Off
					On [Default]
			Frequency		-50 ~ 50 (depends on signal) [Default:0]
			Phase		0~31 (depends on signal) [Default:0]
			H. Position		-50 ~ 50 (depends on signal) [Default:0]
			V. Position		-50 ~ 50 (depends on signal) [Default:0]
			Exit		
		UltraDetail			Off
					1
					2
					3
		Dynamic Black			Off
					On [Default, Lamp mode = Dynamic (30%~100%)]
		Brightness Mode			Bright
					Eco.
		PureEngine [only available for certain models]	PureContrast		Off
					On
			PureColor		Off
					1
					2
					3
					4
					5
			PureMotion		Off
					1
					2
					3
			PureMotion Demo		Off [Default]
					H Split
					V Split
		Reset			
	Aspect Ratio				4:3
					16:9
					LBX [except SVGA XGA models]
					Superwide [Video]
					Native
					Auto
	Edge Mask				0 ~ 10 [Default: 0]
	Digital Zoom				-5 ~ 25 [Default: 0]
	Image Shift	H			-100 ~ 100 [Default: 0]
		V			-100 ~ 100 [Default: 0]

USING THE PROJECTOR

Main Menu	Sub Menu	Sub Menu 2	Sub Menu 3	Sub Menu 4	Values
Audio	Internal Speaker				Auto [Default]
					Off
					On
	Mute				Off [Default]
					On
	Volume				0 ~ 10 [Default: 5]
Setup	Projection				Front [Default]
					Rear
					Ceiling-top
					Rear-top
	Lamp Settings	Lamp Reminder			Off
					On [Default]
		Lamp Reset			Cancel [Default]
					Yes
	Filter Settings	Filter Usage Hours			(read only)
		Optional Filter Installed			Yes
					No
		Filter Reminder			Off
					300hr
					500hr [Default]
					800hr
					1000hr
		Filter Reset			Cancel [Default]
					Yes
	Power Settings	Direct Power On			Off [Default]
					On
		Auto Power Off (min)			0 ~ 180 (5 min increments) [Default: 0]
		Sleep Timer (min)			0 ~ 990 (30 min increments) [Default: 0]
			Always On		No [Default]
					Yes
		Power Mode (Standby)			Active
					Eco [Default]
	Security	Security			Off
					On
		Security Timer	Month		
			Day		
			Hour		
		Change Password			

Main Menu	Sub Menu	Sub Menu 2	Sub Menu 3	Sub Menu 4	Values
Setup	Test Pattern				Green Grid
					Magenta Grid
					White Grid
					White
					Off
	Remote Settings [depends on remote]	IR Function			On
					Front
					Rear
					Off
		User1			Test Pattern
					LAN
					CMS
					Color Temp
					Gamma
					Auto Source
					Projection
					Lamp Settings
					Zoom
					MHL
					Dynamic Range [Default]
					Dynamic Black
					PureEngine
		User2			Test Pattern
					LAN
					CMS
					Color Temp
					Gamma
					Auto Source
					Projection
					Lamp Settings
					Zoom
					MHL [Default]
					Dynamic Range
					Dynamic Black
					PureEngine
		User3			Test Pattern
					LAN
					CMS
					Color Temp
					Gamma
					Auto Source
					Projection
					Lamp Settings
					Zoom

Main Menu	Sub Menu	Sub Menu 2	Sub Menu 3	Sub Menu 4	Values
Setup	Remote Settings [depends on remote]	User3			MHL
					Dynamic Range
					Dynamic Black [Default]
					PureEngine
	Projector ID				00 ~ 99
	12V Trigger	12V Trigger			On
					Off
	Options	Language			English [Default]
					Deutsch
					Français
					Italiano
					Español
					Português
					繁體中文
					簡体中文
					日本語
					한국어
					Русский
		Menu Settings	Menu Location		Top left
					Top right
					Center [Default]
					Bottom left
					Bottom right
			Menu Timer		Off
					5sec
					10sec [Default]
		Auto Source			Off [Default]
					On
		Input Source			HDMI1
					HDMI2/MHL
					VGA
		High Altitude			Off [Default]
					On
		Display Mode Lock			Off [Default]
					On
		Keypad Lock			Off [Default]
					On
		Information Hide			Off [Default]
					On
		Logo			Default [Default]
					Neutral

Main Menu	Sub Menu	Sub Menu 2	Sub Menu 3	Sub Menu 4	Values
Setup	Options	Background Color			None [Default]
					Blue
					Red
					Green
					Gray
		HDMI 2 Setting			EDID 1 [Default]
					EDID 2
		HDMI 1 EQ			1 ~ 7 [Default: 4]
		HDMI 2 EQ			1 ~ 7 [Default: 4]
	Reset	Reset OSD			Cancel [Default]
					Yes
		Reset to Default			Cancel [Default]
					Yes
Network	LAN	Network Status			(read only)
		MAC Address			(read only)
		DHCP			Off [Default]
					On
		IP Address			192.168.0.100 [Default]
		Subnet Mask			255.255.255.0 [Default]
		Gateway			192.168.0.254 [Default]
		DNS			192.168.0.51 [Default]
		Reset			
	Control	Crestron			Off
					On [Default] **NOTE:** *Port 41794*
		Extron			Off
					On [Default] **NOTE:** *Port 2023*
		PJ Link			Off
					On [Default] **NOTE:** *Port 4352*
		AMX Device Discovery			Off
					On [Default] **NOTE:** *Port 9131*
		Telnet			Off
					On [Default] **NOTE:** *Port 23*
		HTTP			Off
					On [Default] **NOTE:** *Port 80*

Main Menu	Sub Menu	Sub Menu 2	Sub Menu 3	Sub Menu 4	Values
Information	Regulatory				
	Serial Number				
	Source				
	Resolution				00x00
	Refresh Rate				0.00Hz
	Display Mode				
	Power Mode (Standby)				
	Lamp Hours	Bright			0 hr
		Eco.			0 hr
		Dynamic			0 hr
		Total			
	Network Status				
	IP Address				
	Projector ID				00 ~ 99
	Filter Usage Hours				
	Brightness Mode				
	FW Version	System			
		LAN			
		MCU			

USING THE PROJECTOR

Display menu

Display image settings menu

Display Mode

There are many factory presets optimized for various types of images.

- **Cinema**: Provides the best colours for watching movies.
- **HDR**: Displays High Dynamic Range (HDR) content as the director intended.
- **Vivid**: In this mode, the color saturation and brightness are well-balanced. Choose this mode for playing games.
- **Game**: Select this mode to increase the brightness and response time level for enjoying video games.
- **Reference**: This mode is intended to reproduce as close as possible the image the way the movie director intended. Color, color temperature, brightness, contrast and gamma settings are all configured to standard reference levels. Select this mode to watch a video.
- **Bright**: Maximum brightness from PC input.
- **User**: Memorize user's settings.
- **ISF Day**: Optimize the image with the ISF Day mode to be perfectly calibrated and high picture quality.
- **ISF Night**: Optimize the image with the ISF Night mode to be perfectly calibrated and high picture quality.

Note: *For access and calibration of ISF daytime and night viewing modes, please contact your local dealer.*

Wall Color

Use this function to obtain an optimized screen image according to the wall color. Select between off, blackboard, light yellow, light green, light blue, pink, and gray.

Dynamic Range

Configure the High Dynamic Range (HDR) setting and its effect when displaying video from 4K Blu-ray players and streaming devices.

➤ **HDR**

- **Off**: Turn off HDR processing.
- **SDR->HDR**: Add HDR processing effect to SDR signal. You can adjust the level of HDR processing from the HDR Effect menu.
- **Auto**: Auto detect HDR signal.

➤ **HDR Effect**

- **Bright**: Choose this mode for more saturated colors.
- **Standard**: Choose this mode for natural looking images.
- **Film**: Choose this mode for improved detail.
- **Detail**: Choose this mode for more detail in dark scenes.

Brightness

Adjust the brightness of the image.

Contrast

The contrast controls the degree of difference between the lightest and darkest parts of the picture.

Sharpness

Adjust the sharpness of the image.

Color

Adjust a video image from black and white to fully saturated color.

Tint

Adjust the color balance of red and green.

Gamma

Set up gamma curve type. After the initial setup and fine tuning is completed, utilize the Gamma Adjustment steps to optimize your image output.

- **Film**: For home theater.
- **Video**: For video or TV source.
- **Graphics**: For PC / Photo source.
- **Standard(2.2)**: For standardized setting.
- **1.8 / 2.0 / 2.4**: For specific PC / Photo source.

Color Settings

Configure the color settings.

- **BrilliantColor™**: This adjustable item utilizes a new color-processing algorithm and enhancements to enable higher brightness while providing true, more vibrant colors in picture.
- **Color Temperature**: Select a color temperature from D55, D65, D75, D83, D93, or Native.
- **Color Gamut**: Select an appropriate color gamut from Native, HDTV, Presentation, Cinema, or Game.
- **CMS (Color Management System)**: Select one of the colors (R/G/B/C/M/Y) to adjust its x/y offset and brightness.
  - Color: Select between red (R), green (G), blue (B), cyan (C), yellow (Y), magenta (M), and white (W) color.
  - x offset: Adjust the x offset value of the selected color.
  - y offset: Adjust the y offset value of the selected color.
  - Brightness: Adjust the brightness value of the selected color.
  - Reset: Return the factory default settings for color adjustments.
  - Exit: Exit the “CMS” menu.
- **RGB Gain/Bias:** This settings allows to configure the brightness (gain) and contrast (bias) of an image.
  - Reset: Return the factory default settings for RGB gain/bias.
  - Exit: Exit the “RGB Gain/Bias” menu.
- **Color Space (non-HDMI input only)**: Select an appropriate color matrix type from the following: AUTO, RGB, or YUV.
- **Color Space (HDMI input only)**: select an appropriate color matrix type from the following: Auto, RGB(0-255), RGB(16-235), and YUV.

Signal

Adjust the signal options.

- **Automatic**: Configure automatically the signal (the frequency and phase items are grayed out). If automatic is disabled, the frequency and phase items will appear for tuning and saving the settings.
- **Frequency**: Change the display data frequency to match the frequency of your computer’s graphic card. Use this function only if the image appears to flicker vertically.

- **Phase**: Synchronize the signal timing of the display with the graphic card. If the image appears to be unstable or flickers, use this function to correct it.
- **H. Position**: Adjust the horizontal positioning of the image.
- **V. Position**: Adjust the vertical positioning of the image.
- **Exit**: Exit the “Signal” menu.

Note: *This menu is only available if the input source is RGB/Component.*

UltraDetail

Adjust the edges of the projected image in order to provide more perceived details.

Dynamic Black

Use to automatically adjust the picture brightness to give optimum contrast performance.

Brightness Mode

Adjust the brightness mode settings.

- **Bright**: Choose “Bright” to increase the brightness.
- **Eco**: Choose “Eco” to dim the projector lamp which will lower power consumption and extend the lamp life.

PureEngine

Adjust the PureEngine parameters.

- **PureContrast**: Use to automatically optimize the brightness of the display during dark / light movie scenes to be shown in incredible detail.
- **PureColor**: Use to significantly increase the image’s vividness.
- **PureMotion**: Use to preserve a natural motion of the displayed image.
- **PureMotion Demo**: This feature enables you to see the difference in the image quality between the raw unprocessed image and the image processed as processed by the PureMotion. Use this mode to check the adjustments that you make to the PureMotion settings.

Note: *This menu is only available for certain models.*

Reset

Return the factory default settings for color settings.

Display aspect ratio menu

Aspect Ratio

Select the aspect ratio of the displayed image between the following options:

- **4:3**: This format is for 4:3 input sources.
- **16:9**: This format is for 16:9 input sources, like HDTV and DVD enhanced for Wide screen TV.
- **LBX**: This format is for non-16x9, letterbox source and if you use external 16x9 lens to display 2.35:1 aspect ratio in full resolution.
- **Superwide**: Use this special 2.0:1 aspect ratio to display both 16:9 and 2.35:1 aspect ratio movies without black bars at the top and bottom of the screen.
- **Native**: This format displays the original image without any scaling.
- **Auto**: Automatically selects the appropriate display format.

USING THE PROJECTOR

Note:

- *Detailed informations about LBX mode:*
  - *Some Letter-Box Format DVDs are not enhanced for 16x9 TVs. In this situation, the image will not look right when displaying image in 16:9 mode. In this situation, please try to use the 4:3 mode to view the DVD. If the content is not 4:3, there will be black bars around the image in 16:9 display. For this type of content, you can use LBX mode to fill the image on the 16:9 display.*
  - *If you use an external anamorphic lens, this LBX mode also allows you to watch a 2.35:1 content (include Anamorphic DVD and HDTV film source) that supports anamorphic wide is enhanced for 16x9 Display in a wide 2.35:1 image. In this case, there are no black bars. Lamp power and vertical resolution are fully utilized.*
- *To use the superwide format, do the following:*
  - *a) Set the screen aspect ratio to 2.0:1.*
  - *b) Select "Superwide" format.*
  - *c) Align the projector image correctly on the screen.*

4K UHD scaling table:

16 : 9 screen	480i/p	576i/p	720p	1080i/p	2160p
4x3	Scale to 2880 x 2160.				
16x9	Scale to 3840 x 2160.				
LBX	Get the central 3840 x 1620 image, and then scale to 3840 x 2160 for display.				
Native mode	1:1 mapping centered. No scaling will be made; the displayed resolution depends on input source.				
Auto	-If source is 4:3, the screen type will be scaled to 2880 x 2160. -If source is 16:9, the screen type will be scaled to 3840 x 2160. -If source is 15:9, the screen type will be scaled to 3600 x 2160. -If source is 16:10, the screen type will be scaled to 3456 x 2160.				

Auto mapping rule:

	Input resolution		Auto/Scale	
	H-resolution	V-resolution	3840	2160
4:3	640	480	2880	2160
	800	600	2880	2160
	1024	768	2880	2160
	1280	1024	2880	2160
	1400	1050	2880	2160
	1600	1200	2880	2160
Wide Laptop	1280	720	3840	2160
	1280	768	3600	2160
	1280	800	3456	2160
SDTV	720	576	2700	2160
	720	480	3240	2160
HDTV	1280	720	3840	2160
	1920	1080	3840	2160

Display edge mask menu

Edge Mask

Use this function to remove the video encoding noise on the edge of video source.

Display digital zoom menu

Digital Zoom

Use to reduce or magnify an image on the projection screen.

Display image shift menu

Image Shift

Adjust the projected image position horizontally (H) or vertically (V).

Audio menu

Audio internal speaker menu

Internal Speaker

Use this option to turn on or off the internal speaker.

- **Auto:** Choose “Auto” to automatically turn off the internal speaker when an external speaker is connected to the projector.
- **On:** Choose “On” to turn on the internal speaker.
- **Off:** Choose “Off” to turn off the internal speaker.

Audio mute menu

Mute

Use this option to temporarily turn off the sound.

- **On:** Choose “On” to turn mute on.
- **Off:** Choose “Off” to turn mute off.

Note: *“Mute” function affects both internal and external speaker volume.*

Audio volume menu

Volume

Adjust the volume level.

USING THE PROJECTOR

Setup menu

Setup projection menu

Projection

Select the preferred projection between front, rear, ceiling-top, and rear-top.

Setup lamp settings menu

Lamp Reminder

Choose this function to show or to hide the warning message when the changing lamp message is displayed. The message will appear 30 hours before suggested replacement of lamp.

Lamp Reset

Resets the lamp hour counter after replacing the lamp.

Setup filter settings menu

Filter Usage Hours

Display the filter time.

Optional Filter Installed

Set the warning message setting.

- **Yes:** Display warning message after 500 hours of use.

  Note: *"Filter Usage Hours / Filter Reminder / Filter Reset" will only appear when "Optional Filter Installed" is "Yes".*

- **No:** Turn off warning message.

Filter Reminder

Choose this function to show or hide the warning message when the changing filter message is displayed. The available options include 300hr, 500hr, 800hr, and 1000hr.

Filter Reset

Reset the dust filter counter after replacing or cleaning the dust filter.

Setup power settings menu

Direct Power On

Choose "On" to activate Direct Power mode. The projector will automatically power on when AC power is supplied, without pressing the "Power" key on the projector keypad or on the remote control.

Auto Power Off (min)

Sets the countdown timer interval. The countdown timer will start, when there is no signal being sent to the projector. The projector will automatically power off when the countdown has finished (in minutes).

Sleep Timer (min)

Configure the sleep timer.

- **Sleep Timer (min):** Sets the countdown timer interval. The countdown timer will start, with or without a signal being sent to the projector. The projector will automatically power off when the countdown has finished (in minutes).

  Note: *The Sleep Timer is reset every time when the projector is powered off.*

- **Always On:** Check to set the sleep timer always on.

Power Mode (Standby)

Set the power mode setting.

- **Active:** Choose “Active” to return to normal standby.
- **Eco:** Choose “Eco.” to save power dissipation further < 0.5W.

Setup security menu

Security

Enable this function to prompt for a password before using the projector.

- **On:** Choose “On” to use security verification when the turning on the projector.
- **Off:** Choose “Off” to be able to switch on the projector without password verification.

Security Timer

Can be select the time (Month/Day/Hour) function to set the number of hours the projector can be used. Once this time has elapsed you will be requested to enter your password again.

Change Password

Use to set or modify the password that is prompted when turning the projector on.

Setup test pattern menu

Test Pattern

Select the test pattern from green grid, magenta grid, white grid, white, or disable this function (off).

Setup remote settings menu

IR Function

Set the IR function setting.

- **On:** Choose “On”, the projector can be operated by the remote control from top and front IR receivers.
- **Front:** Choose “Front”, the projector can be operated by the remote control from the front IR receiver.
- **Rear:** Choose “Rear”, the projector can be operated by the remote control from the rear IR receiver.
- **Off:** Choose “Off”, the projector can’t be operated by the remote control. By selecting “Off”, you will be able to use the Keypad keys.

User1/ User2/ User3

Assign the default function for User1, User2, or User3 between Test Pattern, LAN, CMS, Color Temp, Gamma, Auto Source, Projection, Lamp Settings, Zoom, MHL, Dynamic Range, Dynamic Black, or PureEngine.

Setup projector ID menu

Projector ID

ID definition can be set up by menu (range 0-99), and allow user control an individual projector by using RS232 command.

USING THE PROJECTOR

Setup 12V trigger menu

12V Trigger

Use this function to enable or disable the trigger.

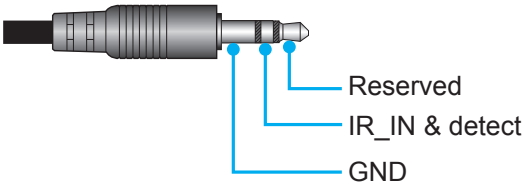

- Off: Choose “Off” to disable the trigger.
- On: Choose “On” to enable the trigger.

Setup options menu

Language

Select the multilingual OSD menu between English, German, French, Italian, Spanish, Portuguese, Traditional Chinese, Simplified Chinese, Japanese, Korean, and Russian.

Menu Settings

Set the menu location on the screen and configure menu timer settings.

- **Menu Location**: Select the menu location on the display screen.
- **Menu Timer**: Set the duration where the OSD menu stays visible on the screen.

Auto Source

Choose this option to let the projector automatically find an available input source.

Input Source

Select the input source between HDMI1, HDMI2/MHL, and VGA.

High Altitude

When “On” is selected, the fans will spin faster. This feature is useful in high altitude areas where the air is thin.

Display Mode Lock

Choose “On” or “Off” to lock or unlock adjusting display mode settings.

Keypad Lock

When the keypad lock function is “On”, the Keypad will be locked. However, the projector can be operated by the remote control. By selecting “Off”, you will be able to reuse the Keypad.

Information Hide

Enable this function to hide the information message.

- **Off:** Choose “On” to hide the info message.
- **On:** Choose “Off” to show the “searching” message.

Logo

Use this function to set the desired startup screen. If changes are made, they will take effect the next time the projector is powered on.

- **Default:** The default startup screen.
- **Neutral:** Logo is not displayed on startup screen.

Background Color

Use this function to display a blue, red, green, gray color, or none when no signal is available.

HDMI 2 Setting

Configure the HDCP2.2-compatible HDMI 2 connector settings.

- **EDID 1**: For 480i/p, 576i/p, 720p, 1080i/p, or 2160p input signal.
- **EDID 2**: For non-interlaced signals only.

HDMI 1 EQ

Set the HDMI port EQ value for HDMI1.

HDMI 2 EQ

Set the HDMI port EQ value for HDMI2/MHL.

Setup reset OSD menu

Reset OSD

Return the factory default settings for OSD menu settings.

Reset to Default

Return the factory default settings for all settings.

Network menu

Network LAN menu

Network Status

Display the network connection status (read-only).

MAC Address

Display the MAC address (read-only).

DHCP

Use this option to enable or disable the DHCP function.

- **On**: Projector will obtain an IP address automatically from your network.
- **Off**: To assign IP, subnet mask, gateway, and DNS configuration manually.

Note: *Exiting OSD will automatically apply the entered values.*

IP Address

Display the IP address.

Subnet Mask

Display subnet mask number.

Gateway

Display the default gateway of the network connected to the projector.

DNS

Display the DNS number.

USING THE PROJECTOR

How to use web browser to control your projector

1. Turn “On” the DHCP option on projector to allow a DHCP server to automatically assign an IP address.
2. Open the web browser in your PC and type in the projector’s IP address (“Network > LAN > IP Address”).
3. Enter the user name and password, and click “Login”.
   The projector’s configuration web interface opens.

Note:

- *The default user name and password is “admin”.*
- *The steps in this section is based on Windows 7 operating system.*

Making a direct connection from your computer to the projector*

1. Turn “Off” the DHCP option on the projector.
2. Configure the IP address, Subnet Mask, Gateway, and DNS on projector (“Network > LAN”).
3. Open ***Network and Sharing Center*** page on your PC, and assign the identical network parameters to your PC as set on projector. Click “OK” to save the parameters.

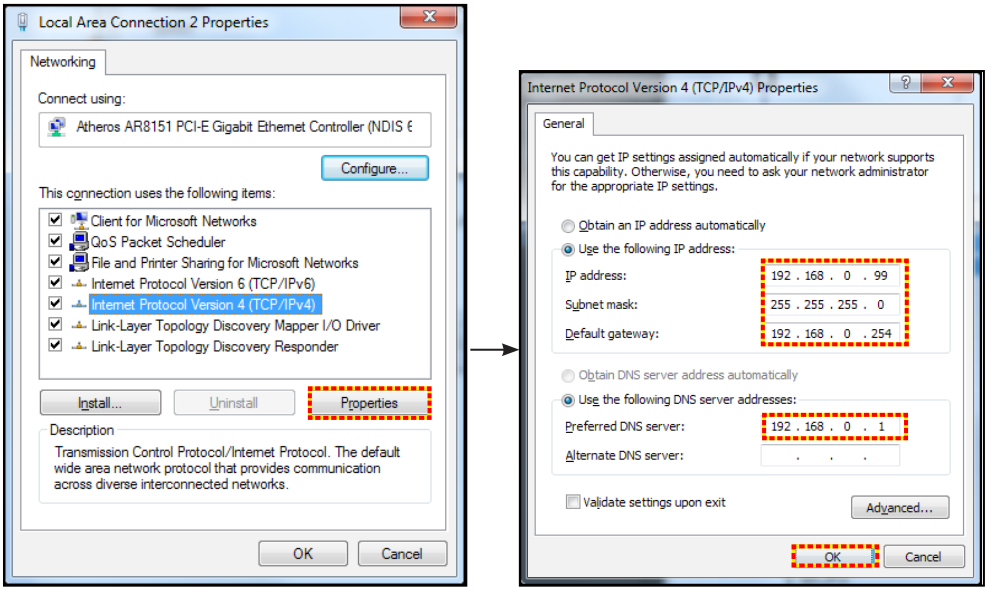

4. Open the web browser on your PC and type in to the URL field the IP address, assigned in step 3. Then press “Enter” key.

Reset

Reset all values for LAN parameters.

Network control menu

Crestron

Use this function to select the network function (port: 41794).

For more information, please visit http://www.crestron.com and www.crestron.com/getroomview.

Extron

Use this function to select the network function (port: 2023).

PJ Link

Use this function to select the network function (port: 4352).

AMX Device Discovery

Use this function to select the network function (port: 9131).

Telnet

Use this function to select the network function (port: 23).

HTTP

Use this function to select the network function (port: 80).

Setup network control settings menu

LAN_RJ45 function

For simplicity and ease of operation, the projector provides diverse networking and remote management features. The LAN / RJ45 function of the projector through a network, such as remotely manage: Power On / Off, brightness, and contrast settings. Also, you can view the projector status information, such as: Video- Source, Sound-Mute, etc.

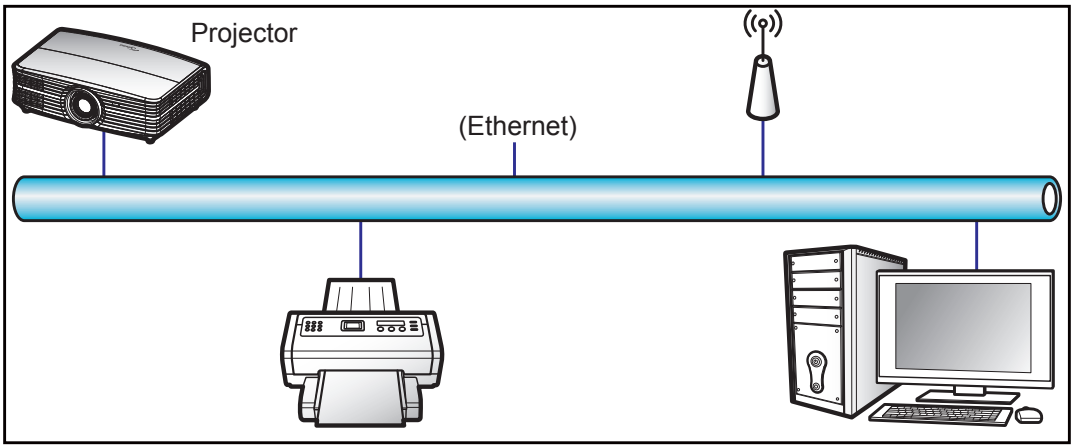

Wired LAN terminal functionalities

This projector can be controlled by using a PC (laptop) or other external device via LAN / RJ45 port and compatible with Crestron / Extron / AMX (Device -Discovery) / PJLink.

- Crestron is a registered trademark of Crestron Electronics, Inc. of the United States.
- Extron is a registered trademark of Extron Electronics, Inc. of the United States.
- AMX is a registered trademark of AMX LLC of the United States.
- PJLink applied for trademark and logo registration in Japan, the United States of America, and other countries by JBMIA.

The projector is supported by the specified commands of the Crestron Electronics controller and related software, for example RoomView®.

http://www.crestron.com/

This projector is compliant to support Extron device(s) for reference.

http://www.extron.com/

This projector is supported by AMX (Device Discovery).

http://www.amx.com/

This projector supports all commands of PJLink Class1 (Version 1.00).

http://pjlink.jbmia.or.jp/english/

For more detailed information about the various types of external devices which can be connected to the LAN / RJ45 port and remote control the projector, as well as the supported commands for these external devices, please contact the Support-Service directly.

USING THE PROJECTOR

LAN RJ45

1. Connect an RJ45 cable to RJ45 ports on the projector and the PC (laptop).

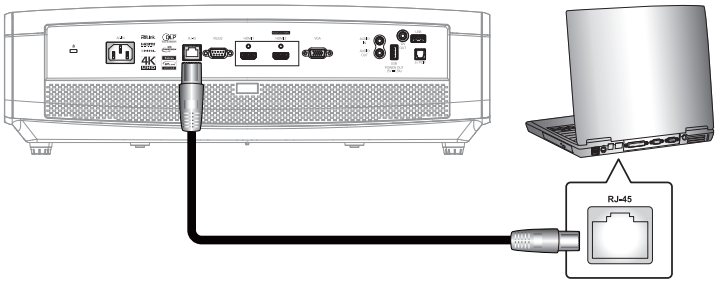

2. On the PC (Laptop), select **Start** > **Control Panel** > **Network Connections**.

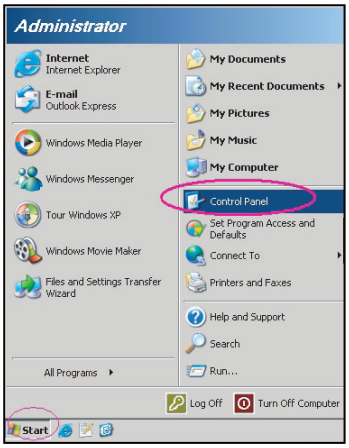

3. Right-click on the L**ocal Area Connection**, and select **Property**.

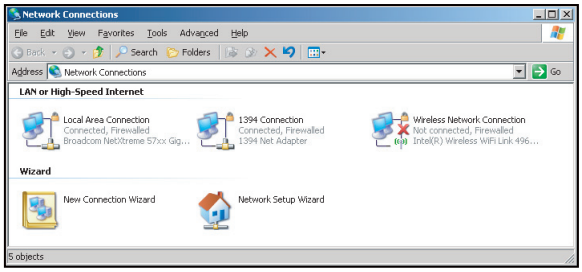

4. In the **Properties** window, select the **General tab**, and select **Internet Protocol (TCP / IP)**.

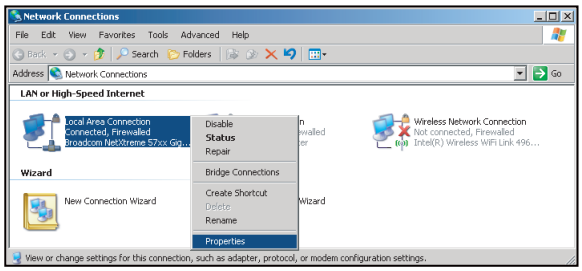

5. Click “Properties”.

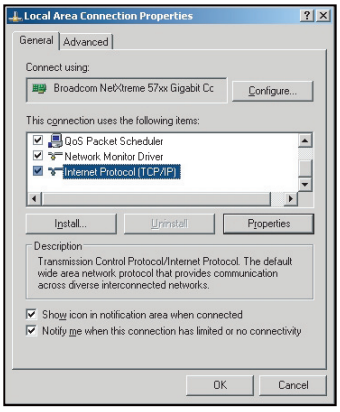

6. Type in the IP address and Subnet mask, then press “OK”.

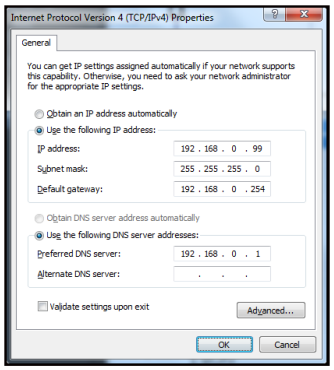

7. Press the “Menu” button on the projector.
8. Open on projector **Network** > **LAN**.
9. Enter the following connection parameters:
   – DHCP: Off
   – IP Address: 192.168.0.100
   – Subnet Mask: 255.255.255.0
   – Gateway: 192.168.0.254
   – DNS: 192.168.0.51
10. Press “Enter” to confirm settings.
11. Open a web browser, for example Microsoft Internet Explorer with Adobe Flash Player 9.0 or higher installed.
12. In the Address bar, input the projector’s IP address: 192.168.0.100.

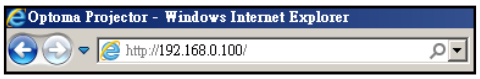

13. Press “Enter”.

USING THE PROJECTOR

The projector is setup for remote management. The LAN / RJ45 function displays as follows:

Information page

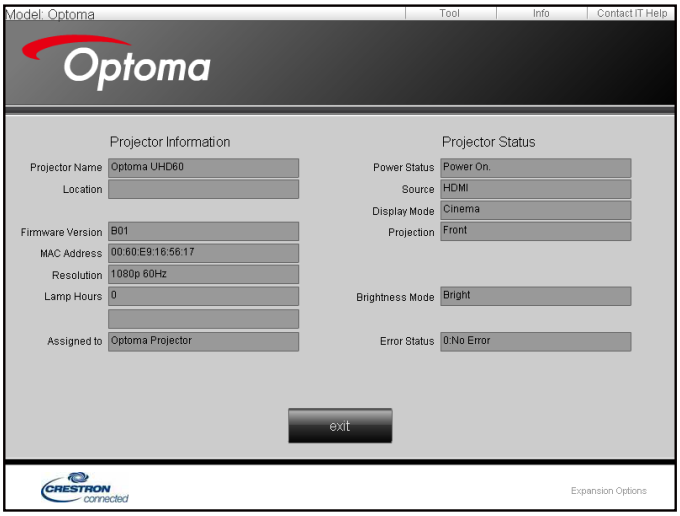

Main page

Tool page

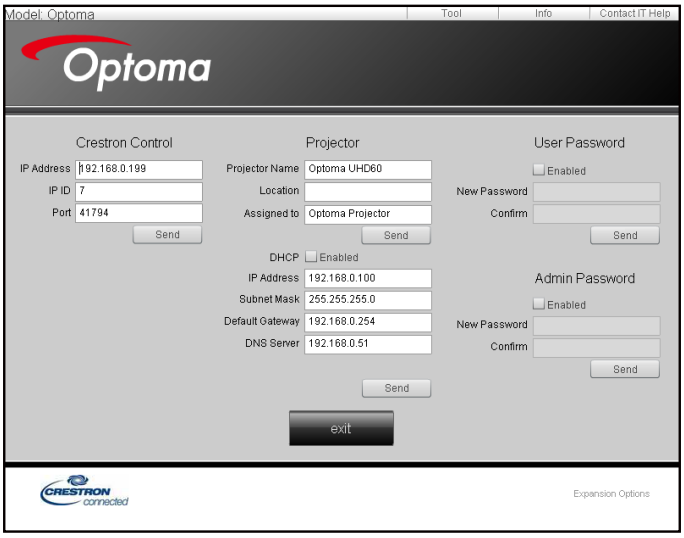

Contact IT helpdesk

USING THE PROJECTOR

RS232 by Telnet Function

There is alternative RS232 command control way, in projector so called “RS232 by TELNET” for LAN / RJ45 interface.

Quick Start-Guide for “RS232 by Telnet”

- Check and get the IP address on OSD of the projector.
- Make sure that the PC / laptop can access the web-page of the projector.
- Make sure that “Windows Firewall” setting is set disabled in case of “TELNET” function filtering out by PC / laptop.

.

1. Select **Start** > **All Programs**.> **Accessories** > **Command Prompt**.

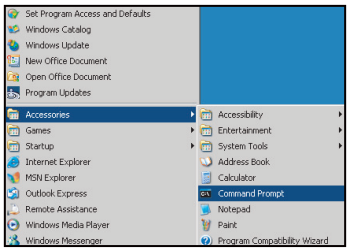

2. Input the command format as follows:
   – telnet ttt.xxx.yyy.zzz 23 (“Enter” key pressed)
   – (ttt.xxx.yyy.zzz: IP-Address of the projector)
3. If Telnet-Connection ready, and user can have RS232 command input, then “Enter” key pressed, the RS232 command will be workable.

Specification for “RS232 by TELNET”:

1. Telnet: TCP.
2. Telnet port: 23 (for more detail, kindly please get contact with the service agent or team).
3. Telnet utility: Windows “TELNET.exe” (console mode).
4. Disconnection for RS232-by-Telnet control normally: Close
5. Windows Telnet utility directly after TELNET connection ready.
   – Limitation 1 for Telnet-Control: there is less than 50 bytes for successive network payload for Telnet-Control application.
   – Limitation 2 for Telnet-Control: there is less than 26 bytes for one complete RS232 command for Telnet-Control.
   – Limitation 3 for Telnet-Control: Minimum delay for next RS232 command must be more than 200 (ms).

USING THE PROJECTOR

Info menu

Info menu

View the projector information as listed below:

- Regulatory
- Serial Number
- Source
- Resolution
- Refresh Rate
- Display Mode
- Power Mode (Standby)
- Lamp Hours
- Network Status
- IP Address
- Projector ID
- Filter Usage Hours
- Brightness Mode
- FW Version

MAINTENANCE

Replacing the lamp

The projector automatically detects the lamp life. When the lamp life is nearing the end of use, a warning message will appear on the screen.

When you see this message, please contact your local reseller or service center to change the lamp as soon as possible. Make sure the projector has been cooled down for at least 30 minutes before changing the lamp.

Warning: If ceiling mounted, please use caution when opening the lamp access panel. It is recommended to wear safety glasses if changing the bulb when ceiling mounted. Caution must be used to prevent any loose parts from falling out of projector.

Warning: Lamp compartment is hot! Allow it to cool down before changing lamp!

Warning: To reduce the risk of personal injury, do not drop the lamp module or touch the lamp bulb. The bulb may shatter and cause injury if it is dropped.

MAINTENANCE

Replacing the lamp (continued)

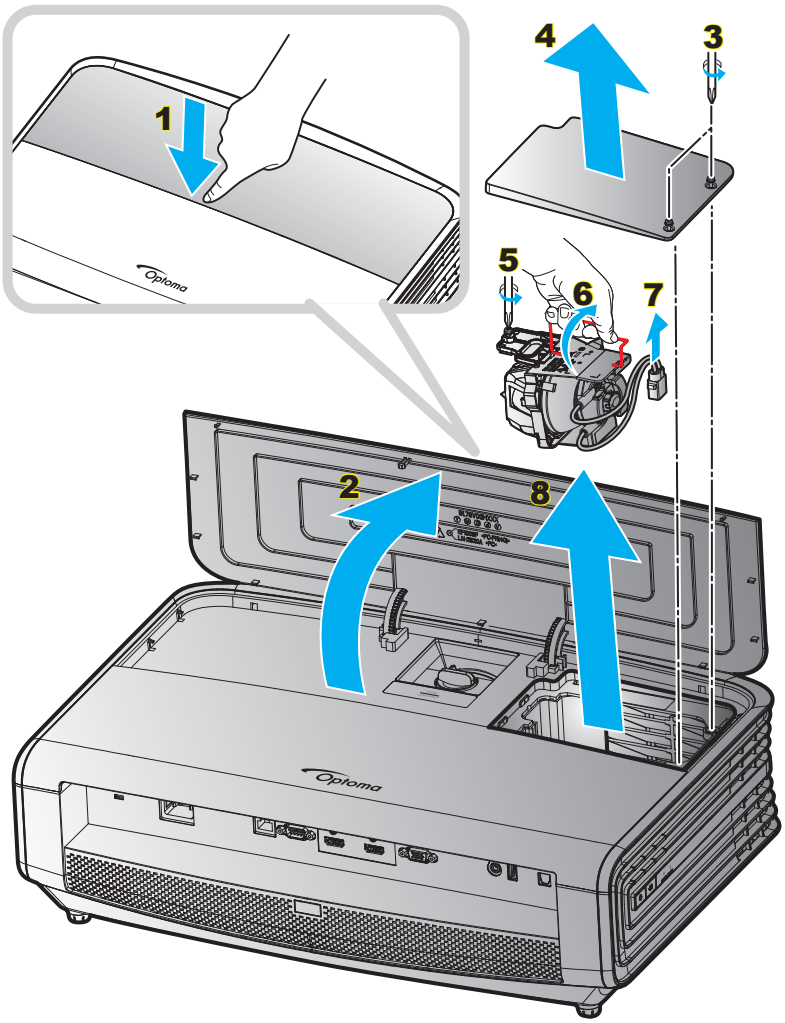

Procedure:

1. Switch off the power to the projector by pressing the "⏻" button on the projector keypad or the "⏻" button on the remote control.
2. Allow the projector to cool down for at least 30 minutes.
3. Disconnect the power cord.
4. Push down firmly on the middle of the top cover to unlock the latch. 1
5. Open the top cover. 2
6. Loosen the 2 screws on the lamp cover. 3
7. Remove the lamp cover. 4
8. Loosen the screw on the lamp module. 5
9. Lift up the lamp handle. 6
10. Remove the lamp cord. 7
11. Remove the lamp module carefully. 8
12. To replace the lamp module, reverse the previous steps.
13. Turn on the projector and reset the lamp timer.
14. Lamp Reset: (i) Press "Menu" → (ii) Select "Setup" → (iii) Select "Lamp Settings" → (iv) Select "Lamp Reset" → (v) Select "Yes".

MAINTENANCE

Note:

- *The projector cannot be turned on if the lamp cover has not been placed back on the projector.*
- *Do not touch the glass area of the lamp. Hand oil can cause the lamp shatter. Use a dry cloth to clean the lamp module if it was accidentally touched.*

Installing and cleaning the dust filter

Installing the dust filter

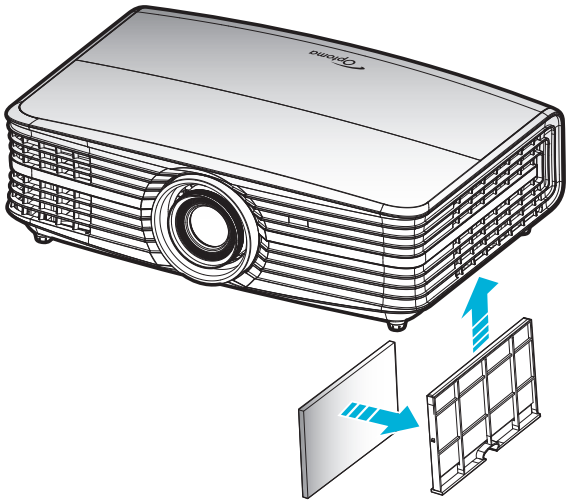

Note: *Dust filters are only required/supplied in the selected regions with excessive dust.*

Cleaning the dust filter

We recommend you to clean the dust filter every three months. Clean it more often if the projector is used in a dusty environment.

Procedure:

1. Switch off the power to the projector by pressing the "⏻" button on the projector keypad or the "⏻" button on the remote control.
2. Disconnect the power cord.
3. Pull the dust filter compartment downwards to remove it out from the bottom of the projector. 1
4. Carefully remove the air filter. Then clean or replace the dust filter. 2
5. To install the dust filter, reverse the previous steps.

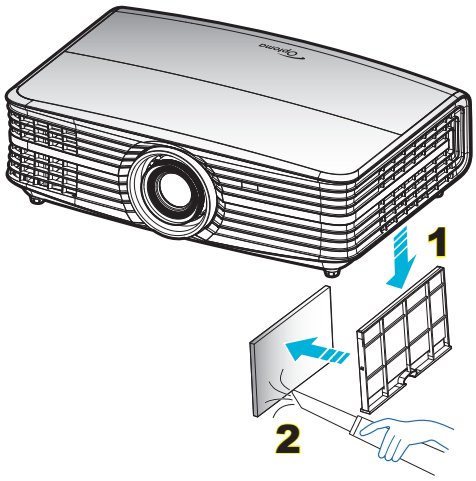

ADDITIONAL INFORMATION

Compatible resolutions

Digital (HDMI 1.4)

Native resolution: 1920 x 1080 @ 60Hz

Established Timing	Standard Timing	Descriptor Timing	Supported Video Mode	Detail Timing
720 x 400 @ 70Hz	1280 x 720 @ 60Hz	1920 x 1080 @ 60Hz (default)	720 x 480i @ 60Hz 16:9	1920 x 1080p @ 60Hz
640 x 480 @ 60Hz	1280 x 800 @ 60Hz		720 x 480p @ 60Hz 4:3	
640 x 480 @ 67Hz	1280 x 1024 @ 60Hz		720 x 480p @ 60Hz 16:9	
640 x 480 @ 72Hz	1920 x 1200 @ 60Hz (reduced)		720 x 576i @ 50Hz 16:9	
640 x 480 @ 75Hz	1366 x 768 @ 60Hz		720 x 576p @ 50Hz 4:3	
800 x 600 @ 56Hz			720 x 576p @ 50Hz 16:9	
800 x 600 @ 60Hz			1280 x 720p @ 60Hz 16:9	
800 x 600 @ 72Hz			1280 x 720p @ 50Hz 16:9	
800 x 600 @ 75Hz			1920 x 1080i @ 60Hz 16:9	
832 x 624 @ 75Hz			1920 x 1080i @ 50Hz 16:9	
1024 x 768 @ 60Hz			1920 x 1080p @ 60Hz 16:9	
1024 x 768 @ 70Hz			1920 x 1080p @ 50Hz 16:9	
1024 x 768 @ 75Hz			1920 x 1080p @ 24Hz 16:9	
1280 x 1024 @ 75Hz			3840 x 2160 @ 24Hz	
1152 x 870 @ 75Hz			3840 x 2160 @ 25Hz	
			3840 x 2160 @ 30Hz	
			4096 x 2160 @ 24Hz	

Digital (HDMI 2.0)

Native resolution: 1920 x 1080 @ 60Hz

B0 / Established Timing	B0 / Standard Timing	B1 / Video Mode	B1 / Detail Timing
720 x 400 @ 70Hz	1280 x 720 @ 60Hz	720 x 480i @ 60Hz 16:9	1920 x 1080p @ 60Hz
640 x 480 @ 60Hz	1280 x 800 @ 60Hz	720 x 480p @ 60Hz 4:3	
640 x 480 @ 67Hz	1280 x 1024 @ 60Hz	720 x 480p @ 60Hz 16:9	
640 x 480 @ 72Hz	1920 x 1200 @ 60Hz (reduced)	720 x 576i @ 50Hz 16:9	
640 x 480 @ 75Hz	1366 x 768 @ 60Hz	720 x 576p @ 50Hz 4:3	
800 x 600 @ 56Hz		720 x 576p @ 50Hz 16:9	
800 x 600 @ 60Hz		1280 x 720p @ 60Hz 16:9	
800 x 600 @ 72Hz		1280 x 720p @ 50Hz 16:9	
800 x 600 @ 75Hz		1920 x 1080i @ 60Hz 16:9	
832 x 624 @ 75Hz		1920 x 1080i @ 50Hz 16:9	
1024 x 768 @ 60Hz		1920 x 1080p @ 60Hz 16:9	
1024 x 768 @ 70Hz		1920 x 1080p @ 50Hz 16:9	
1024 x 768 @ 75Hz		1920 x 1080p @ 24Hz 16:9	
1280 x 1024 @ 75Hz		3840 x 2160 @ 24Hz	
1152 x 870@ 75Hz		3840 x 2160 @ 25Hz	
		3840 x 2160 @ 30Hz	
		3840 x 2160 @ 50Hz	
		3840 x 2160 @ 60Hz	
		4096 x 2160 @ 24Hz	
		4096 x 2160 @ 25Hz	

B0 / Established Timing	B0 / Standard Timing	B1 / Video Mode	B1 / Detail Timing
		4096 x 2160 @ 30Hz	
		4096 x 2160 @ 50Hz	
		4096 x 2160 @ 60Hz	

Note: *Support 1920 x 1080 @ 50Hz.*

Analog

Native resolution: 1920 x 1080 @ 60Hz

B0 / Established Timing	B0 / Standard Timing	B0 / Detail Timing	B1 / Detail Timing
720 x 400 @ 70Hz	1280 x 720 @ 60Hz	1920 x 1080 @ 60Hz (default)	1366 x 768 @ 60Hz
640 x 480 @ 60Hz	1280 x 800 @ 60Hz		
640 x 480 @ 67Hz	1280 x 1024 @ 60Hz		
640 x 480 @ 72Hz	1400 x 1050 @ 60Hz		
640 x 480 @ 75Hz	1600 x 1200 @ 60Hz		
800 x 600 @ 56Hz			
800 x 600 @ 60Hz			
800 x 600 @ 72Hz			
800 x 600 @ 75Hz			
832 x 624 @ 75Hz			
1024 x 768 @ 60Hz			
1024 x 768 @ 70Hz			
1024 x 768 @ 75Hz			
1280 x 1024 @ 75Hz			
1152 x 870 @ 75Hz			

Note: *Support 1920 x 1080 @ 50Hz.*

ADDITIONAL INFORMATION

Image size and projection distance

(image size and distance in meters and feet)

Diagonal length (inch) size of 16:9 Screen	Screen Size W x H				Projection Distance (D)				Min Offset (Hd)		Max Offset (Hd)	
	(m)		(feet)		(m)		(feet)					
	Width	Height	Width	Height	Wide	Tele	Wide	Tele	(m)	(feet)	(m)	(feet)
30.00	0.66	0.37	2.18	1.23	0.92	1.47	3.02	4.82	0.00	0.00	0.06	0.18
40.00	0.89	0.50	2.91	1.63	1.23	1.97	4.04	6.46	0.00	0.00	0.07	0.25
60.00	1.33	0.75	4.36	2.45	1.85	2.95	6.07	9.68	0.00	0.00	0.11	0.37
70.00	1.55	0.87	5.08	2.86	2.15	3.44	7.05	11.29	0.00	0.00	0.13	0.43
80.00	1.77	1.00	5.81	3.27	2.46	3.93	8.07	12.89	0.00	0.00	0.15	0.49
90.00	1.99	1.12	6.54	3.68	2.77	4.42	9.09	14.50	0.00	0.00	0.17	0.55
100.00	2.21	1.25	7.26	4.09	3.08	4.91	10.10	16.11	0.00	0.00	0.19	0.61
120.00	2.66	1.49	8.72	4.90	3.69	5.9	12.11	19.36	0.00	0.00	0.22	0.74
150.00	3.32	1.87	10.89	6.13	4.62	7.37	15.16	24.18	0.00	0.00	0.28	0.92
180.00	3.98	2.24	13.07	7.35	5.54	8.85	18.18	29.04	0.00	0.00	0.34	1.10
250.00	5.53	3.11	18.16	10.21	7.69	12.29	25.23	40.32	0.00	0.00	0.47	1.53
300.00	6.64	3.74	21.79	12.26	9.23	14.74	30.28	48.36	0.00	0.00	0.56	1.84

(image size and distance in meters and inches)

Diagonal length (inch) size of 16:9 Screen	Screen Size W x H				Projection Distance (D)				Min Offset (Hd)		Max Offset (Hd)	
	(m)		(inch)		(m)		(inch)					
	Width	Height	Width	Height	Wide	Tele	Wide	Tele	(m)	(inch)	(m)	(inch)
30.00	0.66	0.37	26.15	14.71	0.92	1.47	36.22	57.87	0.00	0.00	0.06	2.21
40.00	0.89	0.50	34.86	19.61	1.23	1.97	48.43	77.56	0.00	0.00	0.07	2.94
60.00	1.33	0.75	52.29	29.42	1.85	2.95	72.83	116.14	0.00	0.00	0.11	4.41
70.00	1.55	0.87	61.01	34.32	2.15	3.44	84.65	135.43	0.00	0.00	0.13	5.15
80.00	1.77	1.00	69.73	39.22	2.46	3.93	96.85	154.72	0.00	0.00	0.15	5.88
90.00	1.99	1.12	78.44	44.12	2.77	4.42	109.06	174.02	0.00	0.00	0.17	6.62
100.00	2.21	1.25	87.16	49.03	3.08	4.91	121.26	193.31	0.00	0.00	0.19	7.35
120.00	2.66	1.49	104.59	58.83	3.69	5.9	145.28	232.28	0.00	0.00	0.22	8.82
150.00	3.32	1.87	130.74	73.54	4.62	7.37	181.89	290.16	0.00	0.00	0.28	11.03
180.00	3.98	2.24	156.88	88.25	5.54	8.85	218.11	348.43	0.00	0.00	0.34	13.24
250.00	5.53	3.11	217.89	122.57	7.69	12.29	302.76	483.86	0.00	0.00	0.47	18.38
300.00	6.64	3.74	261.47	147.08	9.23	14.74	363.39	580.31	0.00	0.00	0.56	22.06

ADDITIONAL INFORMATION

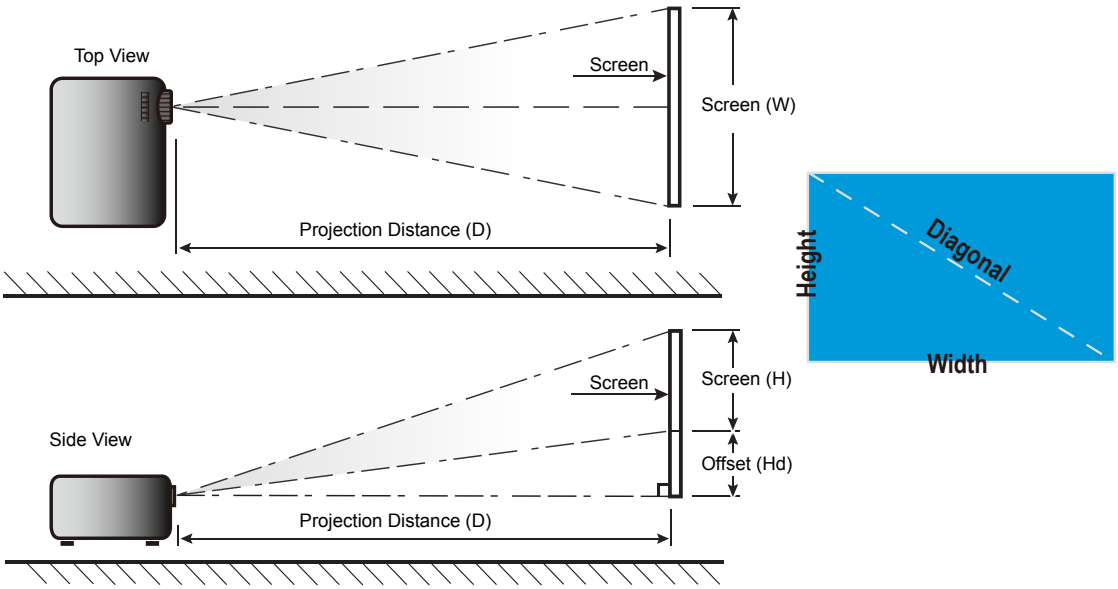

ADDITIONAL INFORMATION

Projector dimensions and ceiling mount installation

1. To prevent damage to your projector, please use the Optoma ceiling mount.
2. If you wish to use a third party ceiling mount kit, please ensure the screws used to attach a mount to the projector meet the following specifications:

- Screw type: M6*4
- Minimum screw length: 10mm

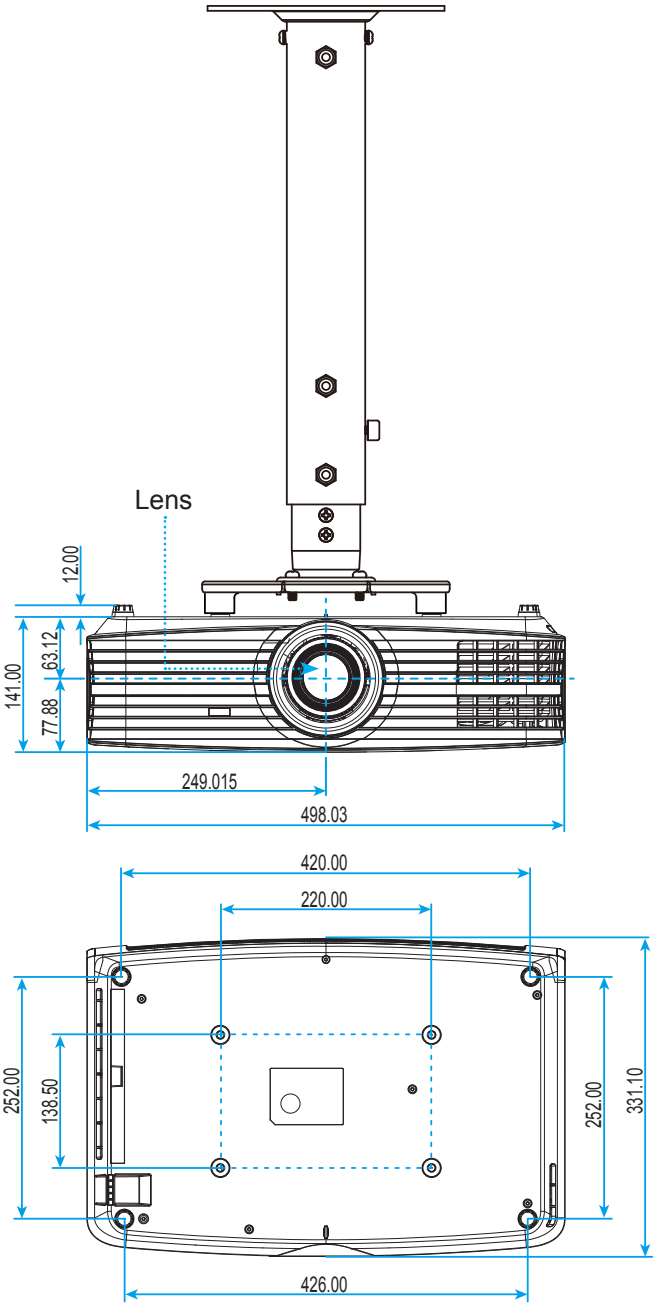

Note: *Please note that damage resulting from incorrect installation will void the warranty.*

Warning:

- If you buy a ceiling mount from another company, please be sure to use the correct screw size. Screw size will vary depending on the thickness of the mounting plate.
- Be sure to keep at least 10 cm gap between the ceiling and the bottom of the projector.
- Avoid installing the projector near a heat source.

ADDITIONAL INFORMATION

IR remote codes

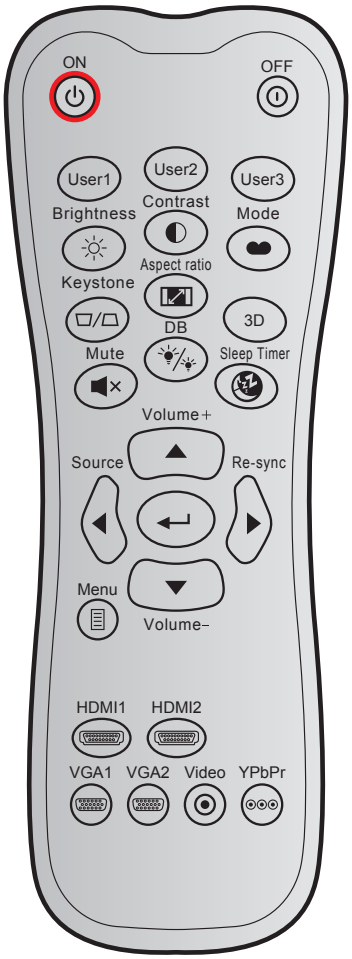

Key		Custom code		Data code	Printing-key definition	Description
		Byte 1	Byte 2	Byte 3		
Power on	⏻	32	CD	02	ON	Press to turn on the projector.
Power off	⏼	32	CD	2E	OFF	Press to turn off the projector.
User 1		32	CD	36	User1	User defined keys. Please see page *35* to setup.
User 2		32	CD	65	User2	
User 3		32	CD	66	User3	
Brightness	☼	32	CD	41	Brightness	Adjust the brightness of the image.
Contrast	◐	32	CD	42	Contrast	Control the degree of difference between the lightest and darkest parts of the picture.
Display mode	⬬	32	CD	05	Mode	Select a display mode for optimized settings for different applications. Please see page *29*.
Keystone	▱/▱	32	CD	07	Keystone	No function
Aspect ratio	⤢	32	CD	64	Aspect ratio	Press to change aspect ratio of a displayed image.
3D		32	CD	89	3D	No function
Mute	🔇	32	CD	52	Mute	Momentarily turns off / on the audio.

ADDITIONAL INFORMATION

Key		Custom code		Data code	Printing-key definition	Description
		Byte 1	Byte 2	Byte 3		
DB (Dynamic Black)		32	CD	44	DB	Automatically adjusts the picture brightness to give optimum contrast performance.
Sleep timer		32	CD	63	Sleep Timer	Sets the countdown timer interval.
Volume +		32	CD	09	Volume +	Adjust to increase volume.
Four direction keys		32	CD	11	▲	Use ▲, ◄, ►, or ▼ to select items or make adjustments to your selection.
		32	CD	10	◄	
		32	CD	12	►	
		32	CD	14	▼	
Source		32	CD	18	Source	Press “Source” to select an input signal.
Enter key		32	CD	0F	↵	Confirm your item selection.
Re-sync		32	CD	04	Re-sync	Automatically synchronizes the projector to the input source.
Volume -		32	CD	0C	Volume -	Adjust to decrease volume.
Menu		32	CD	0E	Menu	Display or exit the on-screen display menus for projector.
HDMI 1		32	CD	16	HDMI1	Press “HDMI1” to choose source from HDMI 1 connector.
HDMI 2		32	CD	30	HDMI2	Press “HDMI2” to choose source from HDMI 2 connector.
VGA 1		32	CD	1B	VGA1	Press “VGA1” to choose source from VGA connector.
VGA 2		32	CD	1E	VGA2	No function
Video		32	CD	1C	Video	No function
YPbPr		32	CD	17	YPbPr	No function

ADDITIONAL INFORMATION

Troubleshooting

If you experience a problem with your projector, please refer to the following information. If a problem persists, please contact your local reseller or service center.

Image problems

No image appears on-screen

- Ensure all the cables and power connections are correctly and securely connected as described in the "Installation" section.
- Ensure the pins of connectors are not crooked or broken.
- Check if the projection lamp has been securely installed. Please refer to the "Replacing the Lamp" section on pages *45-46*.
- Ensure that the "Mute" feature is not turned on.

Image is out of focus

- Adjust the Focus Ring on the projector lens. Please see page *16*.
- Make sure the projection screen is between the required distance from the projector. (Please refer to pages *50-51*).

The image is stretched when displaying 16:9 DVD title

- When you play anamorphic DVD or 16:9 DVD, the projector will show the best image in 16: 9 format on projector side.
- If you play the LBX format DVD title, please change the format as LBX in projector OSD.
- If you play 4:3 format DVD title, please change the format as 4:3 in projector OSD.
- Please setup the display format as 16:9 (wide) aspect ratio type on your DVD player.

Image is too small or too large

- Adjust the zoom lever on the top of the projector.
- Move the projector closer to or further from the screen.
- Press "Menu" on the projector panel, go to "Display-->Aspect Ratio". Try the different settings.

Image has slanted sides:

- If possible, reposition the projector so that it is centered on the screen and below the bottom of the screen.

Image is reversed

- Select "Setup-->Projection" from the OSD and adjust the projection direction.

ADDITIONAL INFORMATION

Other problems

The projector stops responding to all controls

- If possible, turn off the projector, then unplug the power cord and wait at least 20 seconds before reconnecting power.

Lamp burns out or makes a popping sound

- When the lamp reaches its end of life, it will burn out and may make a loud popping sound. If this happens, the projector will not turn on until the lamp module has been replaced. To replace the lamp, follow the procedures in the "Replacing the Lamp" section on pages *45-46*.

Remote control problems

If the remote control does not work

- Check the operating angle of the remote control is pointed within ±15° to the IR receiver on the projector.
- Make sure there are not any obstructions between the remote control and the projector. Move to within 7 m (23 ft) of the projector.
- Make sure batteries are inserted correctly.
- Replace batteries if they are exhausted.

ADDITIONAL INFORMATION

Warning indicators

When the warning indicators (see below) light up or flash, the projector will automatically shutdown:

- "LAMP" LED indicator is lit red and if "On/Standby" indicator flashes red.
- "TEMP" LED indicator is lit red and if "On/Standby" indicator flashes red. This indicates the projector has overheated. Under normal conditions, the project can be switched back on.
- "TEMP" LED indicator flashes red and if "On/Standby" indicator flashes red.

Unplug the power cord from the projector, wait for 30 seconds and try again. If the warning indicator light up or flash, please contact your nearest service center for assistance.

LED lightning messages

Message	On/Standby LED		Temp LED	Lamp LED
	(Red)	(Blue)	(Red)	(Red)
Standby state (Input power cord)	Steady light			
Power on (Warming)		Flashing (0.5 sec off / 0.5 sec on)		
Power on and Lamp lighting		Steady light		
Power off (Cooling)		Flashing (0.5 sec off / 0.5 sec light). Back to red steady light when cooling fan turns off.		
Error (Lamp failure)	Flashing			Steady light
Error (Fan failure)	Flashing		Flashing	
Error (Over temp.)	Flashing		Steady light	
Standby State (Burn in mode)		Flashing		
Burn in (Warming)		Flashing		
Burn in (Cooling)		Flashing		
Burn in (Lamp lighting)		Flashing (3 sec on / 1 sec off)		
Burn in (Lamp off)		Flashing (1 sec on / 3 sec off)		

- Power off:

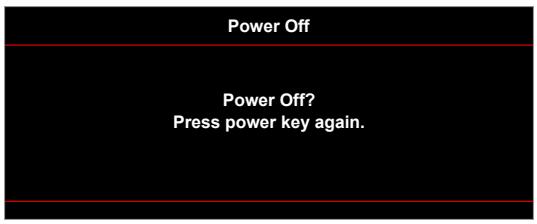

- Lamp warning:

ADDITIONAL INFORMATION

- Temperature warning:

- Fan failed:

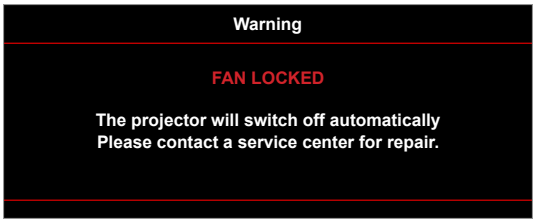

- Out of display range:

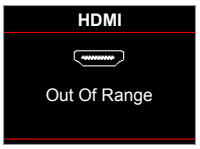

- Power down warning:

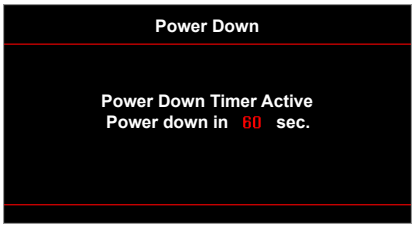

- Security timer alarm:

USING THE PROJECTOR

Specifications

Optical	Description
Maximum resolution	- Graphic up to 2160p@60Hz - Maximum Resolution: HDMI1 : 1920*1200@60Hz(RB) HDMI2 : 2160p@60Hz
Native resolution	(w/o actuator) 2716 x 1528
Lens	Manual zoom and manual focus
Image size (diagonal)	26.45”~302.2” focus range optimized to the image size 60”
Projection distance	1.3m ~ 9.3m focus range optimized to the image size 60”

Electrical	Description
Inputs	- HDMI 1.4a - VGA IN - Audio In 3.5mm - HDMI V2.0 HDCP2.2 / MHL 2.1 - USB-A - USB2.0 USB-A for 5V PWR 1.5A - RS232C male (9-pin D-SUB) - RJ-45 (support web control)
Outputs	- Audio Out 3.5mm - SPDIF Out - 12V Trigger (3.5mm jack)
Control	USB type A for mouse / service
Color reproduction	1073.4 Million color
Scan rate	Horizontal scan rate: 15.375 ~ 91.146 KHz Vertical scan rate: 24 ~ 85 Hz (120Hz for 3D feature projector)
Built-in speaker	Yes, 4W
Power requirement	100 - 240V ±10%, AC 50/60Hz
Input current	3.8A-1.0A

Mechanical	Description
Installation orientation	Front, Rear, Ceiling - Front, Rear - top
Dimensions	- 498 mm (W) x 331 mm (D) x 141 mm (H) (without feet) - 498 mm (W) x 331 mm (D) x 153 mm (H) (with feet)
Weight	7.12 ± 0.5 kg
Environmental conditions	Operating in 5 ~ 40°C , 10% to 85% humidity (non-condensing)

Note: *All specifications are subject to change without notice.*

Optoma global offices

For service or support, please contact your local office.

USA
3178 Laurelview Ct.
Fremont, CA 94538, USA
www.optomausa.com

888-289-6786
510-897-8601
services@optoma.com

Canada
3178 Laurelview Ct.
Fremont, CA 94538, USA
www.optomausa.com

888-289-6786
510-897-8601
services@optoma.com

Latin America
3178 Laurelview Ct.
Fremont, CA 94538, USA
www.optomausa.com

888-289-6786
510-897-8601
services@optoma.com

Europe
42 Caxton Way, The Watford Business Park
Watford, Hertfordshire,
WD18 8QZ, UK
www.optoma.eu
Service Tel : +44 (0)1923 691865

+44 (0) 1923 691 800
+44 (0) 1923 691 888
service@tsc-europe.com

Benelux BV
Randstad 22-123
1316 BW Almere
The Netherlands
www.optoma.nl

+31 (0) 36 820 0252
+31 (0) 36 548 9052

France
Bâtiment E
81-83 avenue Edouard Vaillant
92100 Boulogne Billancourt, France

+33 1 41 46 12 20
+33 1 41 46 94 35
savoptoma@optoma.fr

Spain
C/ José Hierro,36 Of. 1C
28522 Rivas VaciaMadrid,
Spain

+34 91 499 06 06
+34 91 670 08 32

Deutschland
Wiesenstrasse 21 W
D40549 Düsseldorf,
Germany

+49 (0) 211 506 6670
+49 (0) 211 506 66799
info@optoma.de

Scandinavia
Lerpeveien 25
3040 Drammen
Norway

+47 32 98 89 90
+47 32 98 89 99
info@optoma.no

PO.BOX 9515
3038 Drammen
Norway

Korea
WOOMI TECH.CO.,LTD.
4F, Minu Bldg.33-14, Kangnam-Ku,
Seoul,135-815, KOREA
korea.optoma.com

+82+2+34430004
+82+2+34430005

Japan
東京都足立区綾瀬3-25-18
株式会社オーエス
コンタクトセンター:0120-380-495

info@os-worldwide.com
www.os-worldwide.com

Taiwan
12F., No.213, Sec. 3, Beixin Rd.,
Xindian Dist., New Taipei City 231,
Taiwan, R.O.C.
www.optoma.com.tw

+886-2-8911-8600
+886-2-8911-6550
services@optoma.com.tw
asia.optoma.com

Hong Kong
Unit A, 27/F Dragon Centre,
79 Wing Hong Street,
Cheung Sha Wan,
Kowloon, Hong Kong

+852-2396-8968
+852-2370-1222
www.optoma.com.hk

China
5F, No. 1205, Kaixuan Rd.,
Changning District
Shanghai, 200052, China

+86-21-62947376
+86-21-62947375
www.optoma.com.cn

P/N:36.78V03G001-A

www.optoma.com