USA's primary source for projector lamps
myprojectorlamps

PROJECTOR OWNER'S MANUAL

Optoma

HD83

Need a replacement lamp for this projector?

www.myprojectorlamps.com

Original manufacturer manual, provided unmodified as a courtesy of MyProjectorLamps.com.
All trademarks belong to their respective owners.

Table of Contents

Table of Contents 1

Usage Notice 2

Safety Information 2

Precautions 3

Eye Safety Warnings 6

Introduction 7

Package Overview 7

Product Overview 8

Main Unit.....8

Connection Ports 9

Remote Control.....10

Backup Remote Control..... 11

Coin Cell Battery Replacement..... 11

Installation 12

Connect to Computer/Notebook.....12

Connect to Video.....13

Connect to 3D Video Devices 14

Using the 3D glasses 16

Powering On/Off the Projector 17

Powering On the Projector.....17

Powering Off the Projector.....18

Warning Indicator.....18

Adjusting the Projected Image 19

Adjusting the Projector's Height.....19

Adjusting Projected Image Position Using Pure-Shift.....20

Adjusting Projection Image Size.....22

User Controls 23

Remote Control 23

On-screen Display Menus 25

How to operate 25

Menu Tree 26

IMAGE 27

IMAGE | Advanced 29

IMAGE | Advanced | PureEngine.....30

IMAGE | Advanced | Color Settings.....31

DISPLAY.....33

DISPLAY | 3D 35

SYSTEM 37

SYSTEM | Lamp Settings 40

SETUP.....41

Appendices.....43

Troubleshooting.....43

Image Problems.....43

Other Problems.....45

Remote Control Problems 45

LED Lighting Messages.....46

On Screen Messages 47

Replacing the Lamp 48

Compatibility Modes 50

RS232 Commands and Protocol Function List.....53

RS232 Pin Assignments 53

RS232 Protocol Function List 54

Ceiling Mount Installation 56

Optoma Global Offices 57

Regulation & Safety Notices.....59

FCC Notice 59

Declaration of Conformity for EU countries ...60

Safety Information

	The lightning flash with arrow head within an equilateral triangle is intended to alert the user to the presence of uninsulated “dangerous voltage” within the product’s enclosure that may be of sufficient magnitude to constitute a risk of electric shock to persons.
	The exclamation point within an equilateral triangle is intended to alert the user to the presence of important operating and maintenance (servicing) instructions in the literature accompanying the appliance.

WARNING: TO REDUCE THE RISK OF FIRE OR ELECTRIC SHOCK, DO NOT EXPOSE THIS APPLIANCE TO RAIN OR MOISTURE. DANGEROUS HIGH VOLTAGES ARE PRESENT INSIDE THE ENCLOSURE. DO NOT OPEN THE CABINET. REFER SERVICING TO QUALIFIED PERSONNEL ONLY.

Class B emissions limits

This Class B digital apparatus meets all requirements of the Canadian Interference-Causing Equipment Regulations.

Important Safety Instruction

1. Do not block any ventilation openings. To ensure reliable operation of the projector and to protect from over heating, it is recommended to install the projector in a location that does not block ventilation. As an example, do not place the projector on a crowded coffee table, sofa, bed, etc. Do not put the projector in an enclosure such as a book case or a cabinet that restricts air flow.
2. Do not use the projector near water or moisture. To reduce the risk of fire and/or electric shock, do not expose the projector to rain or moisture.
3. Do not install near heat sources such as radiators, heaters, stoves or any other apparatus such as amplifiers that emits heat.
4. Clean only with dry cloth.
5. Only use attachments/accessories specified by the manufacturer.
6. Do not use the unit if it has been physically damaged or abused. Physical damage/abuse would be (but not limited to):
   - Unit has been dropped.
   - Power supply cord or plug has been damaged.
   - Liquid has been spilled on to the projector.
   - Projector has been exposed to rain or moisture.
   - Something has fallen in the projector or something is loose inside.

   Do not attempt to service the unit yourself. Opening or removing covers may expose you to dangerous voltages or other hazards. Please call Optoma before you send the unit for repair.
7. Do not let objects or liquids enter the projector. They may touch dangerous voltage points and short out parts that could result in fire or electric shock.
8. See projector enclosure for safety related markings.
9. The unit should only be repaired by appropriate service personnel.

Precautions

Please follow all warnings, precautions and maintenance as recommended in this user's guide.

- When the lamp reaches the end of its life, the projector will not turn back on until the lamp module has been replaced. To replace the lamp, follow the procedures listed under "Replacing the Lamp" section.

Warning- Do not look into the projector's lens when the lamp is on. The bright light may hurt your eyes.

Warning- To reduce the risk of fire or electric shock, do not expose this projector to rain or moisture.

Warning- Please do not open or disassemble the projector as this may cause electric shock.

Warning- When replacing the lamp, please allow the unit to cool down.

Warning- This projector will detect the life of the lamp itself. Please be sure to change the lamp when it shows warning messages.

Warning- Reset the "Lamp Reset" function from the on-screen display "System|Lamp Setting" menu after replacing the lamp module.

Warning- When switching the projector off, please ensure the cooling cycle has been completed before disconnecting power. Allow 90 seconds for the projector to cool down.

Warning- Do not use lens cap when projector is in operation.

Warning- When the lamp is approaching to the end of its life time, the message "Replacement suggested" will show on the screen. Please contact your local reseller or service center to change the lamp as soon as possible.

Do:

- Turn off and unplug the power plug from the AC outlet before cleaning the product.
- Use a soft dry cloth with mild detergent to clean the display housing.
- Disconnect the power plug from AC outlet if the product is not being used for a long period of time.

Do not:

- Block the slots and openings on the unit provided for ventilation.
- Use abrasive cleaners, waxes or solvents to clean the unit.
- Use under the following conditions:
  - In extremely hot, cold or humid environments.
    - Ensure that the ambient room temperature is within 5°C ~ 35°C
    - Relative humidity is 10% ~ 85%
  - In areas susceptible to excessive dust and dirt.
  - Near any appliance generating a strong magnetic field.
  - In direct sunlight.

Viewing 3D PROJECTOR using the 3D function

IMPORTANT SAFETY INFORMATION. READ THE FOLLOWING WARNINGS BEFORE YOU OR YOUR CHILD USE THE 3D FUNCTION.

Warning

- Children and teenagers may be more susceptible to health issues associated with viewing in 3D and should be closely supervised when viewing these images.

Photosensitive Seizure Warning and Other Health Risks

- Some viewers may experience an epileptic seizure or stroke when exposed to certain flashing images or lights contained in certain Projector pictures or video games. If you suffer from, or have a family history of epilepsy or strokes, please consult with a medical specialist before using the 3D function.
- Even those without a personal or family history of epilepsy or stroke may have an undiagnosed condition that can cause photosensitive epileptic seizures.

- Pregnant women, the elderly, sufferers of serious medical conditions, those who are sleep deprived or under the influence of alcohol should avoid utilizing the unit's 3D functionality.
- If you experience any of the following symptoms, stop viewing 3D pictures immediately and consult a medical specialist: (1) altered vision; (2) light-headedness; (3) dizziness; (4) involuntary movements such as eye or muscle twitching; (5) confusion; (6) nausea; (7) loss of awareness; (8) convulsions; (9) cramps; and/ or (10) disorientation. Children and teenagers may be more likely than adults to experience these symptoms. Parents should monitor their children and ask whether they are experiencing these symptoms.
- Viewing 3D PROJECTOR may also cause motion sickness, perceptual after effects, disorientation, eye strain and decreased postural stability. It is recommended that users take frequent breaks to lessen the potential of these effects. If your eyes show signs of fatigue or dryness or if you have any of the above symptoms, immediately discontinue use of this device and do not resume using it for at least thirty minutes after the symptoms have subsided.
- Watching 3D PROJECTOR while sitting too close to the screen for an extended period of time may damage your eyesight. The ideal viewing distance should be at least three times the screen height. It is recommended that the viewer's eyes are level with the screen.
- Watching 3D PROJECTOR while wearing 3D glasses for an extended period of time may cause a headache or fatigue. If you experience a headache, fatigue or dizziness, stop viewing 3D PROJECTOR and rest.
- Do not use the 3D glasses for any other purpose than for viewing 3D PROJECTOR. Wearing the 3D glasses for any other purpose (as general spectacles, sunglasses, protective goggles, etc.) may be physically harmful to you and may weaken your eyesight.
- Viewing in 3D may cause disorientation for some viewers. Accordingly, DO NOT place your 3D PROJECTOR near open stairwells, cables, balconies, or other objects that can be tripped over, run into, knocked down, broken or fallen over.

Eye Safety Warnings

- Avoid staring/facing directly into the projector beam at all times. Keep your back to the beam as much as possible.
- When projector is used in a classroom, adequately supervise students when they are asked to point out something on the screen.
- In order to minimize the lamp power, use room blinds to reduce ambient light levels.

Package Overview

Unpack and inspect the box contents to ensure all parts listed below are in the box. If something is missing, please contact Optoma customer service.

Projector with lens cap

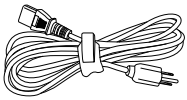

Power Cord 1.8m

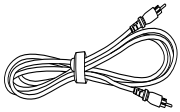

Composite Video Cable 1.8m

Note

- Due to different applications in each Country, some regions may have different accessories.

12V Trigger Connector

Remote Control

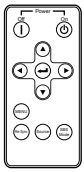

Backup Remote Control

2 x AA Batteries

Backup Remote Battery

Documentation:

- ☑ User's Manual
- ☑ Warranty Card
- ☑ Quick Start Card
- ☑ WEEE Card

Product Overview

Main Unit

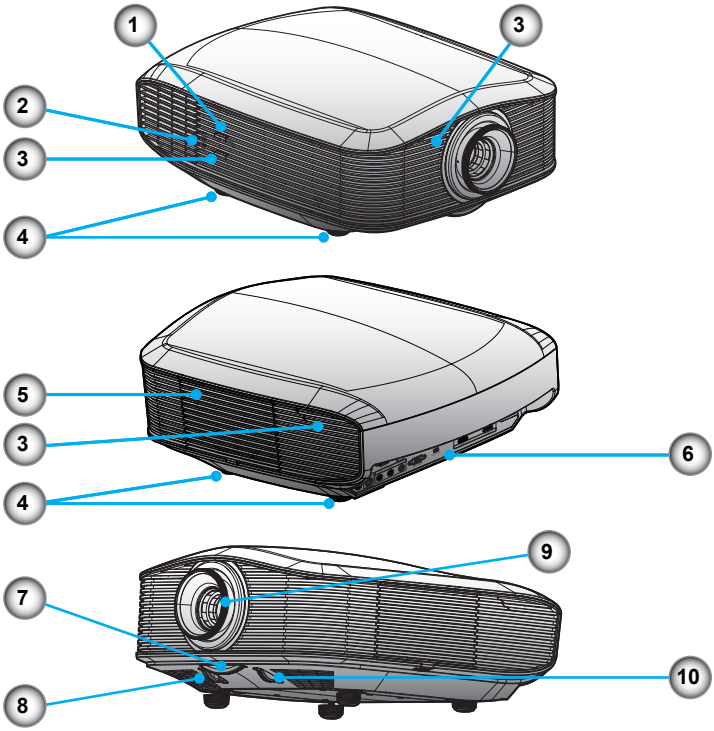

1. Power Button
2. LED Indicators
3. IR Receivers
4. Tilt-Adjustment Feet
5. Lamp Replacement Cover
6. Input / Output Connection Ports
7. Zoom Ring
8. Horizontal Lens Shift Adjustment
9. Focus Adjustment
10. Vertical Lens Shift Adjustment

Connection Ports

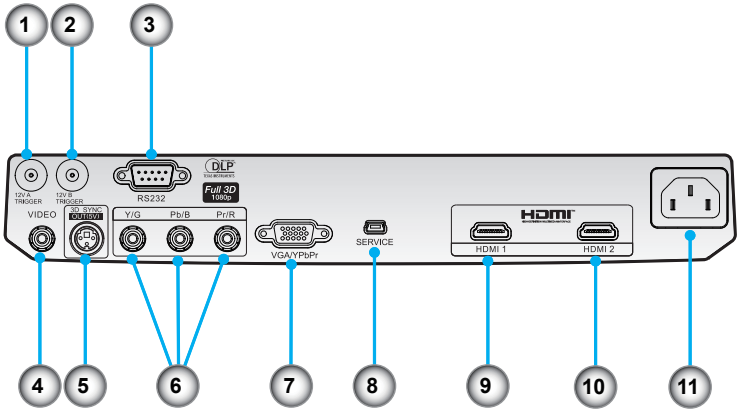

1. 12V Trigger A
2. 12V Trigger B
3. RS232
4. Composite Video
5. 3D Sync Out (5V)
6. Component Video
7. VGA Input
8. USB Service
9. HDMI 1
10. HDMI 2
11. Power Socket

Remote Control

1. Power On
2. Power Off
3. Gamma
4. Lamp Mode
5. Advanced
6. Four Directional Select Keys
7. Mode (Display Mode)
8. Image Scaling
9. SBS Mode
10. Re-Sync
11. Video
12. HDMI 2
13. VGA
14. YPbPr
15. HDMI 1
16. PureEngine
17. Menu
18. Enter
19. Color Management System
20. DynamicBlack
21. Contrast
22. Brightness

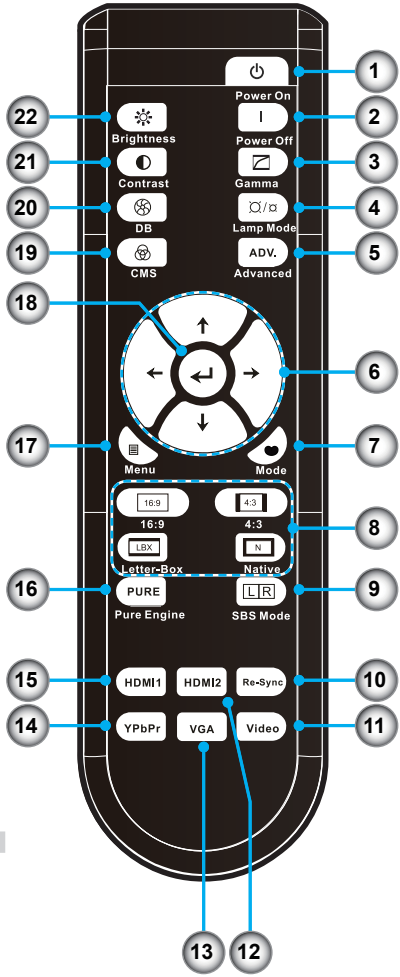

Backup Remote Control

❖ Backup remote control is magnetically attached on the bottom of the projector.

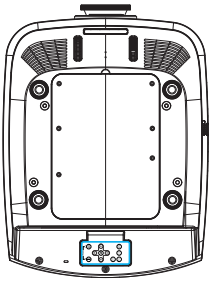

1. Power Off
2. Power On
3. Enter
4. Four Directional Select Keys
5. SBS Mode
6. Source
7. Re-Sync
8. Menu

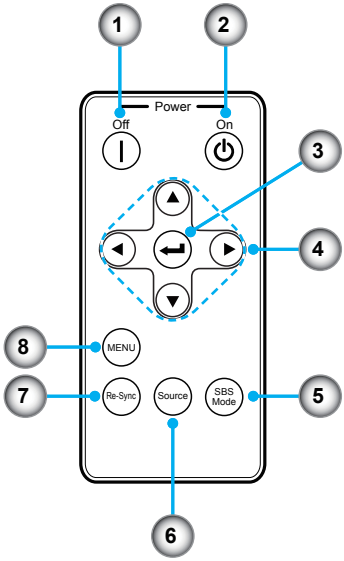

Coin Cell Battery Replacement

❖ When using the remote control for the first time, remove the transparent insulation tape.

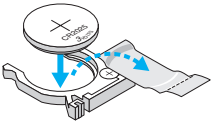

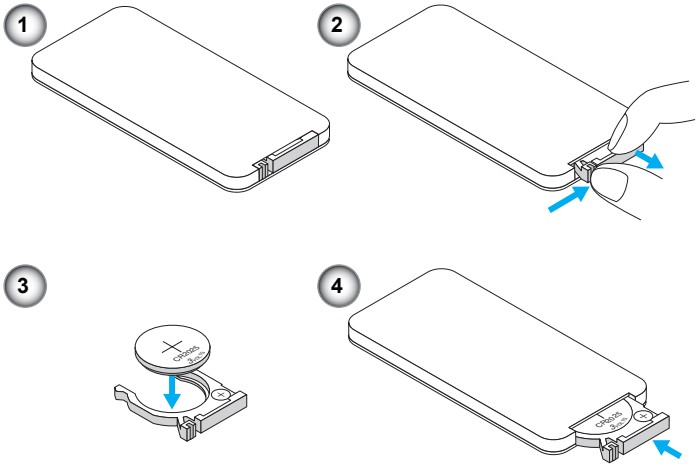

Connect to Computer/Notebook

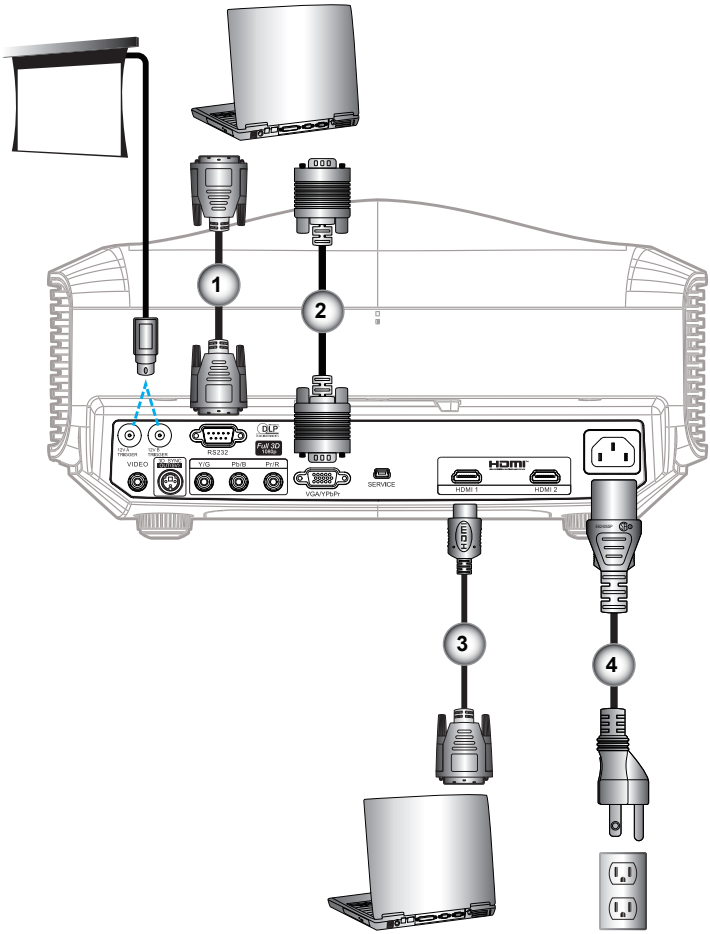

- Due to the difference in applications for each country, some regions may have different accessories.
- * Optional Accessory

1. RS232 Cable *
2. VGA Input Cable *
3. HDMI Cable *
4. Power Cord

Connect to Video

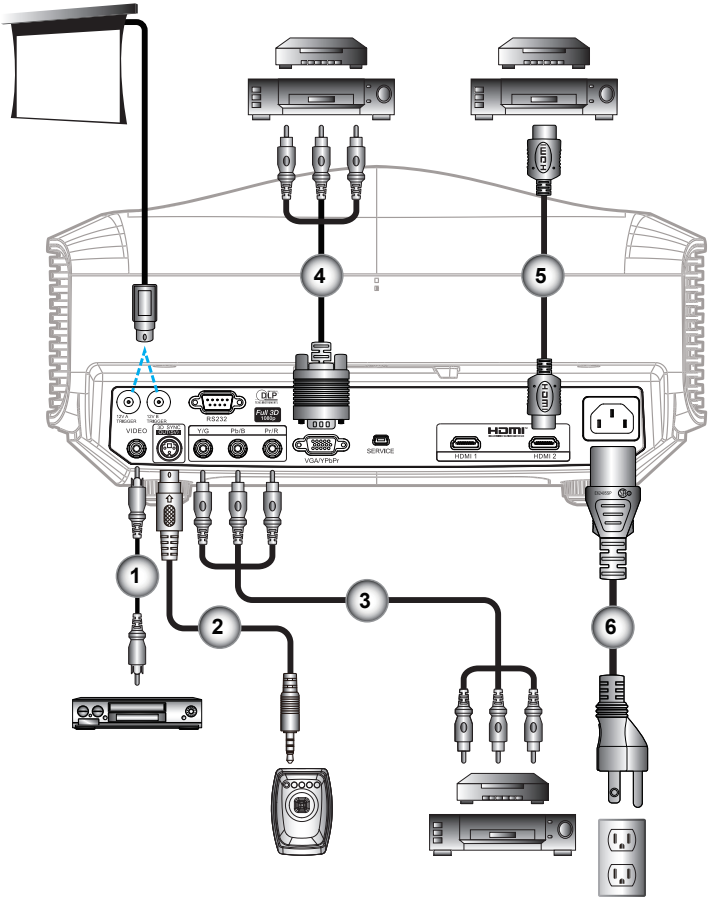

1. Composite Video Cable
2. Emitter cable *
3. RCA Component Cable for YPbPr *
4. VGA to RCA Component Cable for YPbPr *
5. HDMI Cable *
6. Power Cord

- Due to the difference in applications for each country, some regions may have different accessories.
- 12V Trigger B is programmable trigger.
- For more detailed information about connecting to the 3D emitter and 3D glasses, please refer to their user's guides.
- Use high speed HDMI cable to connect Blue-ray 3D player.
- * Optional Accessory

Connect to 3D Video Devices

Once you have connected your devices together with HDMI cables, as shown in the diagram, you are ready to begin. Power ON your 3D video source and your 3D projector.

- The 3D video source device must be powered on before the 3D projector.

PlayStation® 3 Games

- Make sure that you have updated your console to the latest software version in PlayStation® 3.
- Go to the “Settings menu -> Display settings -> Video output -> HDMI”. Select “Automatic” and follow the on-screen instructions.
- Insert your 3D game disc. Alternatively you can download games (and 3D updates) via the PlayStation® network.
- Launch the game. In the in-game menu, select “Play in 3D”.

Blu-ray 3D™ Player

- Make sure that your player can support 3D Blu-ray™ disc and that 3D output is enabled.
- Insert the 3D Blu-ray™ disc into the player, press “Play”.

3D TV (e.g. SKY 3D, DirecTV)

- Contact your TV service provider to enable any 3D channels on your channel package.
- Once enabled, switch to the 3D channel.
- You should see two images side-by-side.
- Switch to the “SBS Mode” of the 3D projector. The option is located in the “Display” section of the projector OSD menu.

3D Device (e.g. 3D DV/DC) with 2D 1080i side by side signal output

- Connect your 3D device and switch to out 3D content with 2D side-by-side output to 3D Projector.
  - You should see two images side-by-side.
- Switch to the “SBS Mode” of the 3D projector. The option is located in the “Display” section of the projector OSD menu.

- If input video is normal 2D, please press “SBS Mode” and switch to “Off”.
- If “SBS Mode” is active, 2D video content will not display correctly.

If watching 3D content from an HDMI 1.4a source (e.g. 3D Blu-ray) your 3D glasses should always be in sync. If watching 3D content from an HDMI 1.3 source (e.g. 3D broadcast using SBS mode) it may be necessary to use the projector’s 3D Sync-Invert option to optimize your 3D experience. The option is located in the “Display ->3D” section of the projector OSD menu.

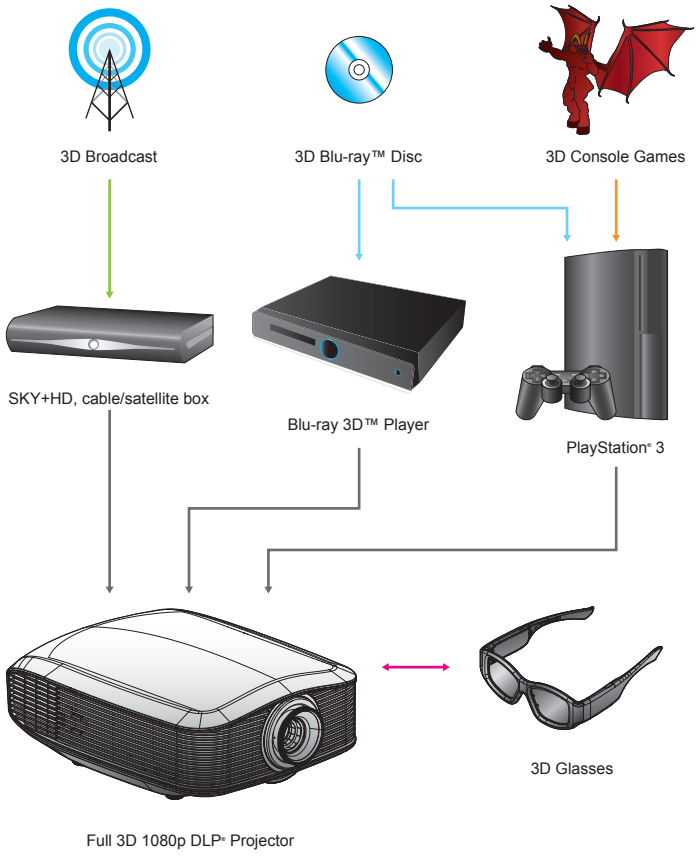

All other product names, company names and trade names used herein are for identifications purposes only and may be trademarks or registered trademarks of their respective owners. All images have been simulated.

Note

❖ For more detailed information, please refer to 3D glasses user's guide.

Using the 3D glasses

1. To turn ON 3D glasses: Press the "Power" button and the LED will flash one time indicating the glasses are ready to use 3D mode.
2. Verify that 3D content is being sent to the projector and signal is compatible with projector specifications.
3. Turn on the "3D Mode" (DLP-Link/VESA 3D) of the 3D projector. The option is located in the "Display" section of the projector OSD menu.
4. Turn on 3D glasses and verify image appears in 3D without eyestrain.
5. If the image does not appear in 3D, please check 3D device set up well to send out 3D image or not. Or "SBS Mode" should turn on when input signal is 2D 1080i side-by-side and repeat previous steps 1 ~ 4.
6. Close your left eye when 3D Images display. To use projector's "3D Sync-Invert" option to optimize your 3D experience. The option is located in the "Display" section of the projector OSD menu.
7. To turn OFF 3D glasses: Press the "Power" button and hold until the LED switches off.
8. For more detailed information, please refer to the 3D glasses user's guide, or manufacturer's Website.

Powering On/Off the Projector

Powering On the Projector

1. Remove the lens cap. ❶
2. Securely connect the power cord and signal cable. When connected, the Power LED will turn red.
3. Turn on the lamp by pressing "⏻" button on the side of the projector or on the remote control. The Power LED will flash blue. ❷
   The startup screen will display in approximately 30 seconds. The first time you use the projector, you can select your preferred language from quick menu after the startup screen display.
4. Turn on your source that you want to display on the screen (computer, notebook, video player, etc). The projector will detect the source automatically and will display on the screen. If not, push menu button and go to "SETUP". Make sure that the "Source Lock" has been set to "Off".

❖ If you connected multiple sources at the same time, press the "Source" key on the remote control to switch between inputs.

NOTE

❖ Turn on the projector first and then select the signal sources.

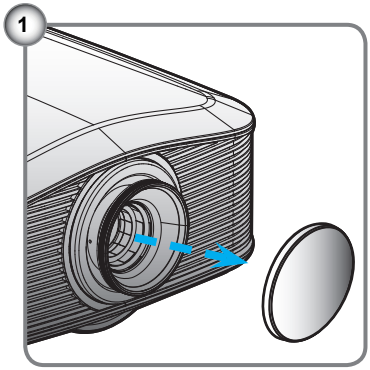

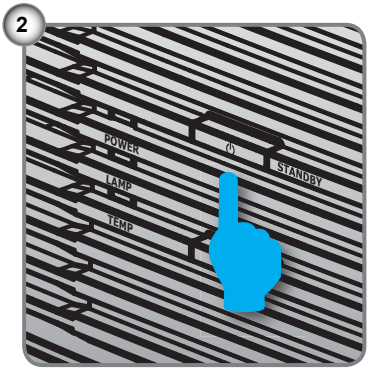

Powering Off the Projector

1. Press the " I " button on the remote control or "⏻" button on the side of the projector two times with one second interval to turn off the projector. First time to push the button will display the following message on the screen.

   Press the " I " button again to confirm the shut down. If the button is not pressed, the message will disappear after 15 seconds.
2. The cooling fans continue to operate for about 60 seconds for cooling cycle and the Power LED will turn blue and flashing. When the lights solid red, the projector has entered standby mode.
   If you wish to turn the projector back on, you must wait until the projector has completed the cooling cycle and has entered standby mode. Once in standby mode, simply press "⏻" button to restart the projector.
3. Disconnect the power cord from the electrical outlet and from the projector.
4. Do not turn on the projector immediately following the power off procedure.

Warning Indicator

- ❖ When the "LAMP" indicator is lit orange, the projector will shut down automatically. Please call the nearest Optoma facility for assistance.
- ❖ When the "TEMP" indicator turns red, it indicates the projector has overheated. The projector will shut down automatically.
  Under normal conditions, the projector can be switched on again after it has cooled down.
- ❖ When the "TEMP" indicator flashes red, it indicates the fan has failed.
- ❖ After the projector has cooled down, you can press and hold " ↑ " button on the remote control for 10 seconds to leave failure mode to standby mode.

NOTE

❖ Contact the nearest service center if the projector displays these symptoms.

Adjusting the Projected Image

Adjusting the Projector's Height

The projector is equipped with elevator feet for adjusting the image height.

- To raise the image:
  Use screw in foot to raise the image to the desired height angle and fine-tune the display angle. ❶
- To lower the image:
  Use screw in foot to lower the image to the desired height angle and fine-tune the display angle. ❷

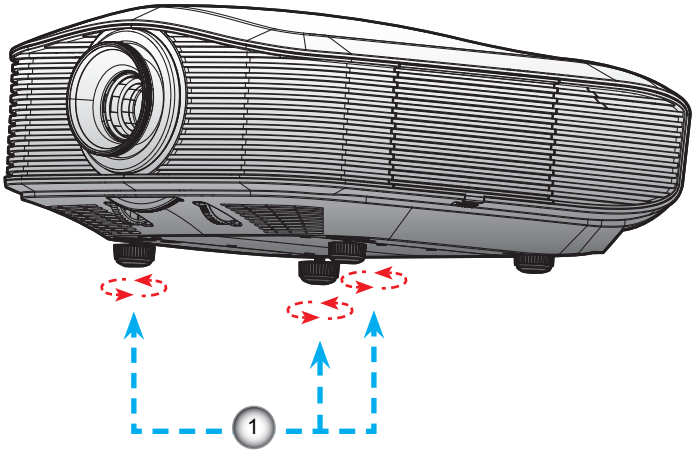

Tilt-Adjustment Feet

Adjusting Projected Image Position Using PureShift

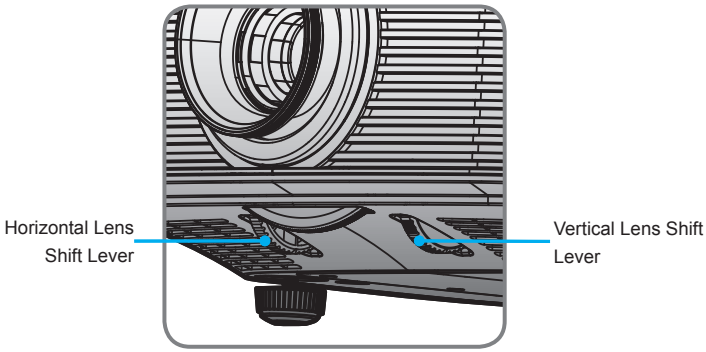

The PureShift feature provides a lens shift function that can be used to adjust the position of the projected image either horizontally or vertically within the range detailed below. PureShift is a unique system that provides lens shift while maintaining a much higher ANSI contrast ratio than traditional lens shift system.

❖ Adjusting the vertical image position
The minimum vertical image offset is fixed at 5% of the image height above the centre of the projector lens. This can not be changed. The vertical image height can be adjusted between 5% and 30% of the image height. Note that the maximum vertical image height adjustment can be limited by the horizontal image position. For example it is not possible to achieve the maximum vertical image position height detailed above if the horizontal image position is at maximum. Please consult the PureShift Range diagram below for further clarification.

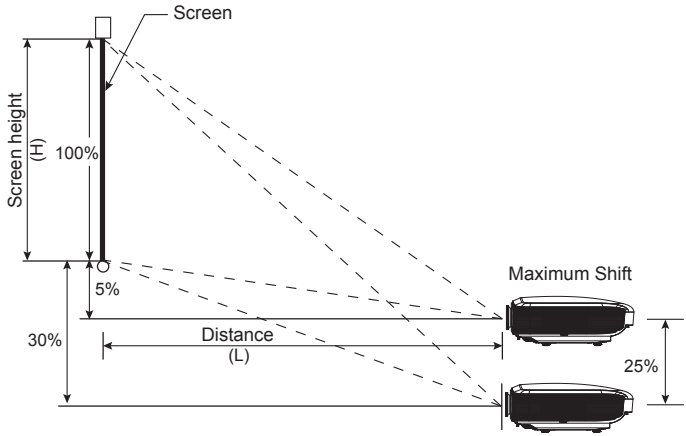

❖ Adjusting the horizontal image position

With the lens in the centre position the horizontal image position can be adjusted to the left or right by up to a maximum of 15% of the image width. Note that the maximum horizontal image height adjustment can be limited by the vertical image position. For example it is not possible to achieve the maximum horizontal image position if the vertical image position is at maximum. Please consult the PureShift Range diagram below for further clarification.

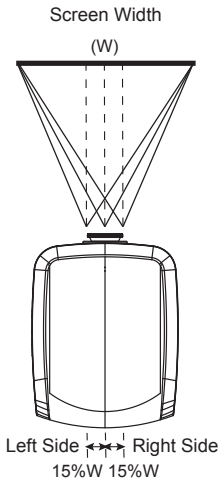

❖ PureShift Range Diagram

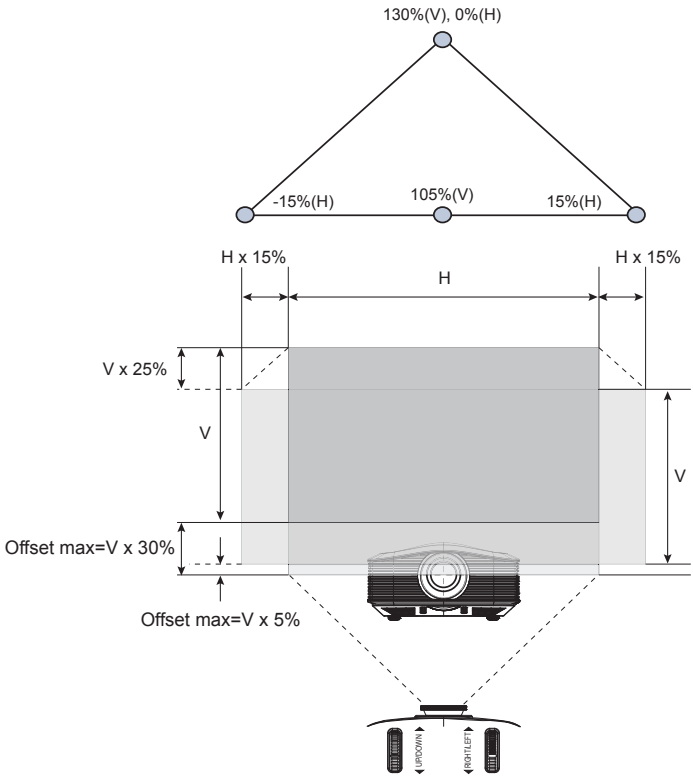

Adjusting Projection Image Size

Diagonal length (inch) size of 16:9 Screen	Screen Size W x H (16:9)				Projection distance (D)				Offset (Hd)	
	(m)		(feet)		(m)		(feet)			
	Width	Height	Width	Height	wide	tele	wide	tele	(m)	(feet)
30	0.66	0.37	2.18	1.23	-	1.51	-	4.97	0.11	0.37
45	1.00	0.56	3.27	1.84	1.49	2.27	4.88	7.45	0.17	0.55
50	1.11	0.62	3.63	2.04	1.65	2.52	5.43	8.28	0.19	0.61
60	1.33	0.75	4.36	2.45	1.98	3.03	6.51	9.93	0.22	0.74
70	1.55	0.87	5.08	2.86	2.32	3.53	7.60	11.59	0.26	0.86
80	1.77	1.00	5.81	3.27	2.65	4.04	8.68	13.24	0.30	0.98
90	1.99	1.12	6.54	3.68	2.98	4.54	9.77	14.90	0.34	1.10
100	2.21	1.25	7.26	4.09	3.31	5.05	10.85	16.55	0.37	1.23
120	2.66	1.49	8.72	4.90	3.97	6.05	13.02	19.86	0.45	1.47
150	3.32	1.87	10.89	6.13	4.96	7.57	16.28	24.83	0.56	1.84
200	4.43	2.49	14.53	8.17	6.61	10.09	21.70	33.11	0.75	2.45
300	6.64	3.74	21.79	12.26	9.92	15.14	32.55	49.66	1.12	3.68

NOTE

❖ This graph is for user's reference only.

Remote Control

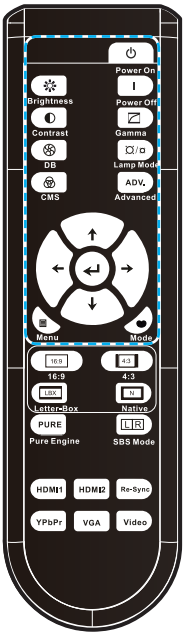

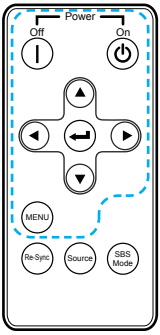

Using the Remote Control		
⏻	Power On	Turn on the projector.
☼	Brightness	Adjust the brightness of the image.
I	Power Off	Turn off the projector.
◐	Contrast	Control the degree of difference between the lightest and darkest parts of the picture.
◪	Gamma	Set up gamma curve type.
✇	DynamicBlack	Enable the projector to automatically optimize the display of dark movie scenes enabling them to be shown in incredible detail.
☼/☼	Lamp Mode	Increase the brightness of the image.
✇	Color Management System	Select one of the colors (R/G/B/C/M/Y) to adjust its x/y offset and brightness.
	Advanced	Display or exit the “Image | Advanced” menu.
↵	Enter	Confirm your item selection.
↑ ↓ ← →	Four Directional Select Keys	Use directional select keys to select items or make adjustments to your selection.
▤	Menu	Display or exit the on-screen display menus for projector.
❤	Mode (Display Mode)	Select the display mode from Cinema, Bright, Photo, Reference and User.

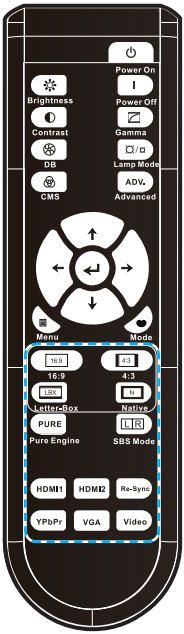

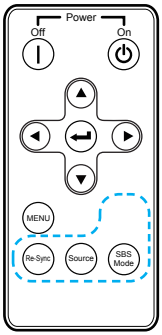

Using the Remote Control

16:9	16:9	Scale the image to 16:9 aspect ratio.
4:3	4:3	Scale the image to 4:3 aspect ratio.
LBX	Letter Box	Enable the viewing of the letter-boxed nonanamorphically en-hanced movie at full screen width. Part of the original image will be lost if the image aspect ratio is less than 2.35:1.
N	Native	The input source will be displayed without scaling.
PURE	PureEngine	The PureEngine is a collection of advanced image processing tech-nologies that enhances the quality of the displayed image.
L R	SBS Mode	Press “SBS Mode” to switch between “Off” and “SBS”, use up/ down button to switch to “Top and Bottom” or “Frame Sequential then press “Enter” to confirm.
	HDMI 1	Press “HDMI 1” to choose source from HDMI 1 connector.
	HDMI 2	Press “HDMI 2” to choose source from HDMI 2 connector.
	Re-Sync	Automatically synchronize the projector to the input source.
	YPbPr	Press “YPbPr” to choose Compo-nent Video source.
	VGA	Press “VGA” to choose source from VGA connector.
	Video	Press “Video” to choose Compos-ite Video source.
	Source	Press “Source” to choose RGB, Component, Composite Video, and HDMI source.

On-screen Display Menus

The Projector has multilingual On-screen Display menus that allow you to make image adjustments and change a variety of settings. The projector will automatically detect the source.

How to operate

1. To open the OSD menu, press “Menu” on the Remote Control or Control Panel.
2 When OSD is displayed, use ▲▼ keys to select any item in the main menu. While making a selection on a particular page, press ► or “Enter” key to enter sub menu.
3. Use ▲▼ keys to select the desired item in the sub menu and then press ► or “Enter” key to view further settings. Adjust the settings by ◄► key.
4. Select the next item to be adjusted in the sub menu and adjust as described above.
5. Press “Enter” or “Menu” to confirm, and the screen will return to the main menu.
6. To exit, press “Menu” again. The OSD menu will close and the projector will automatically save the new settings.

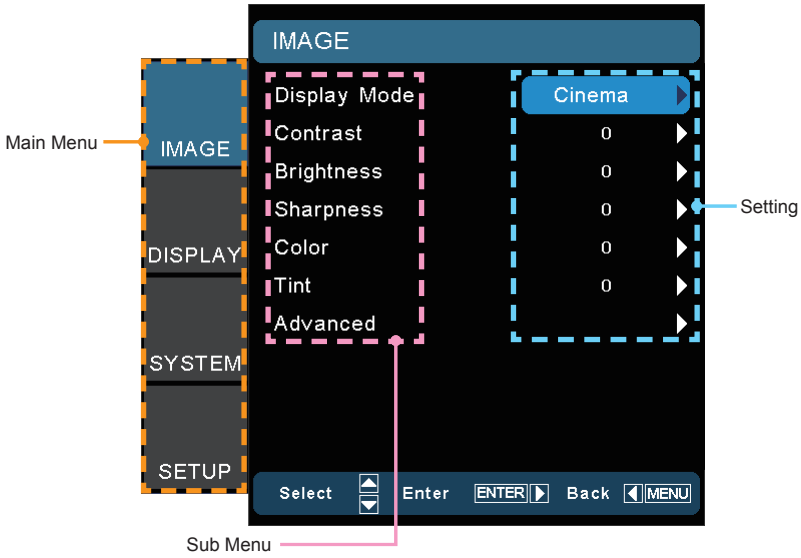

Menu Tree

- Please note that the on-screen display (OSD) menus vary according to the signal type selected and the projector model you are using.

- (#1) “Color” and “Tint” are only supported for composite and component sources.
- (#2) “3D Sync Invert” is only available when 3D is enabled.
- (#3) “Signal” is only supported in Analog VGA (RGB) signal.

- While the 3D is ON, the Dynamic Black function will be disabled.

Main Menu	Sub Menu		Settings
IMAGE	Display Mode		Cinema / Reference / Photo / Bright / 3D / ISF Day / ISF Night / User
	Contrast		-50~50
	Brightness		-50~50
	Sharpness		0~15
	#1 Color		-50~50
	#1 Tint		-50~50
	Advanced	Noise Reduction	0~10
		Gamma	Film / Video / Graphics / Standard
		PureEngine	PureDetail / PureColor / PureMotion / PureEngine Demo / Exit
		DynamicBlack	Off / Cinema 1 / Cinema 2
		Color Settings	Color Temperature / Color Gamut / CMS / RGB Gain/Bias / Color Space / RGB Channel
		Exit	
DISPLAY	Format		4:3 / 16:9 / LBX / Native
	Zoom		0~10
	Edge Mask		0~5
	V Image Shift		-50~50
	V Keystone		-30~30
	SuperWide		Off / AUTO / On (16:9) / On (2.35:1)
	3D	3D Mode	DLP-Link / VESA 3D
		3D -> 2D	3D / L / R
		3D Format	Off / SBS / Top and Bottom / Frame Sequential
		#2 3D Sync. Invert	On / Off
		Exit	
SYSTEM	Menu Location		
	Lamp Settings	Lamp Hours	
		Lamp Reminder	On / Off
		Lamp Mode	Bright / STD / Image AI
		Lamp Reset	Cancel / Yes
		Exit	
	Projection		
	Test Pattern		Off / Grid / White
	Background Color		Blue / Gray / Black
	12V Trigger A		On / Off
	12V Trigger B	Off	
		On	4:3 / 16:9 / LBX / Native / Exit
		Auto 235	
		Auto 3D	
		Exit	
SETUP	Language		English / Deutsch / Français / Italiano / Español / Português / Svenska / Nederlands / Norsk / Dansk / Polski / Suomi / Русский / ελληνικά / Magyar / Čeština / عربي / 繁體中文 / 简体中文 / 日本語 / 한국어 / Türkçe
	Input Source		HDMI 1 / HDMI 2 / Component / VGA / Video / Exit
	Source Lock		On / Off
	High Altitude		On / Off
	Information Hide		On / Off
	Auto Power Off		0~180
	Signal	Frequency	0~100
		Phase	-50~50
		H. Position	-50~50
		V. Position	-50~50
		Automatic	Enable / Disable
		Exit	
		White Level	-50~50
		Black Level	-50~50
		Saturation	-50~50
		Hue	-50~50
		IRE	0 IRE / 7.5 IRE
		Exit	
	Reset	Current	Cancel / Yes
		All	Cancel / Yes

IMAGE

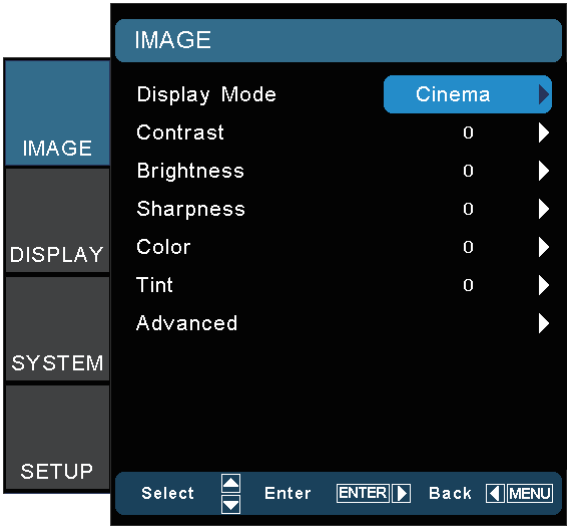

❖ "ISF Day" and "ISF Night" will not be shown when the ISF modes have not been calibrated.

Display Mode

There are many factory presets optimized for various types of images.

- Cinema: For home theater.
- Reference: This mode is intended to reproduce, as close as possible, the image the way the movie director intended. Color, color temperature, brightness, contrast and gamma settings are all configured to standard reference levels.
- Photo: Optimized for displaying photographic images.
- Bright: Maximum brightness from PC input.
- 3D: Recommended setting for 3D mode enabled. Any further adjustments by the user in 3D will be saved in this mode for further use.
- ISF Day: Optimize the image with the ISF Day mode to be perfectly calibrated and high picture quality.
- ISF Night: Optimize the image with the ISF Night mode to be perfectly calibrated and high picture quality.
- User: User's settings.

Note

❖ "Color" and "Tint" are only supported for composite and component sources.

Contrast

The contrast controls the degree of difference between the lightest and darkest parts of the picture. Adjusting the contrast changes the amount of black and white in the image.

- Press the ◄ to decrease the contrast.
- Press the ► to increase the contrast.

Brightness

Adjust the brightness of the image.

- Press the ◄ to darken image.
- Press the ► to lighten the image.

Sharpness

Adjust the sharpness of the image.

- Press the ◄ to decrease the sharpness.
- Press the ► to increase the sharpness.

Color

Adjust a video image from black and white to fully saturated color.

- Press the ◄ to decrease the color saturation in the image.
- Press the ► to increase the color saturation in the image.

Tint

Adjust the color balance of red and green.

- Press the ◄ to increase the amount of green in the image.
- Press the ► to increase the amount of red in the image.

IMAGE | Advanced

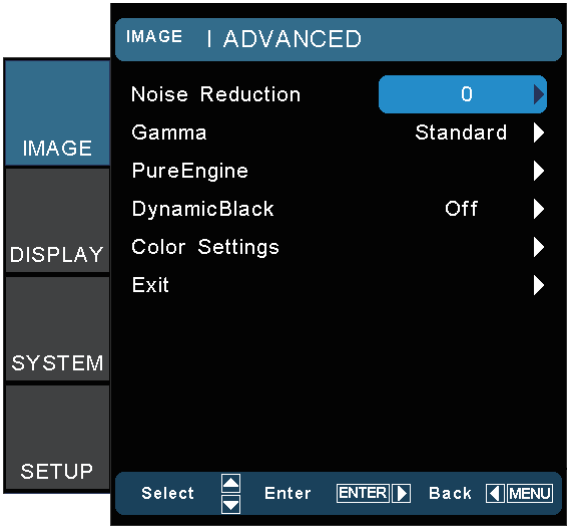

Noise Reduction

The Noise Reduction reduces the amount of visible noise interlaced signals. The range is from “0” to “10”. (0: Off)

Gamma

This allows you to set up gamma curve type. After the initial setup and fine tuning is completed, utilize the Gamma Adjustment steps to optimize your image output.

- Film: for home theater.
- Video: for video or TV source.
- Standard: for standardized setting.
- Graphics: for image source.

PureEngine

The PureEngine is a collection of advanced image processing technologies that enhances the quality of the displayed image.

DynamicBlack

DynamicBlack enables the projector to automatically optimize the display of dark movie scenes enabling them to be shown in incredible detail.

Note

- While the 3D is ON, the Dynamic Black function will be disabled.

Color Settings

Press ► into the next menu and then use ▲ or ▼ to select item.

IMAGE | Advanced | PureEngine

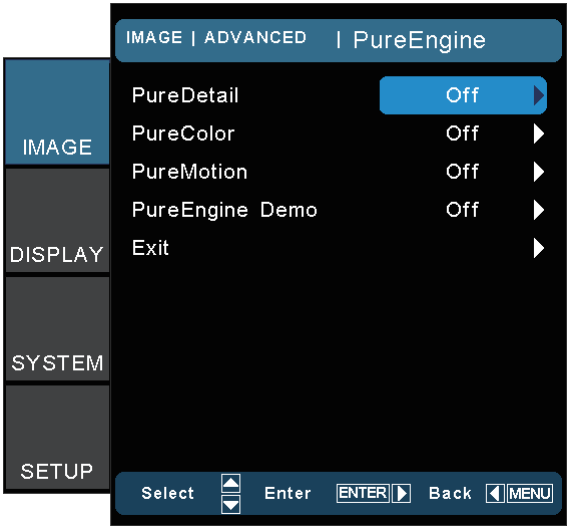

PureDetail

PureDetail is an edge enhancement tool that enables the edges in the projected image is be enhanced thus providing more perceived detail.

PureColor

This adjustable item utilizes a new color-processing algorithm and enhancements to enable the picture's vividness to be significantly increased. The range is from "0" to "5".

PureMotion

PureMotion uses sophisticated algorithms to ensure that the natural motion in the image is preserved.

PureEngine Demo

This feature enables you to see the difference in the image quality between the raw unprocessed image and the image processed as processed by the PureEngine. Use this mode to check the adjustments that you make to the PureEngine settings.

Note

- While the input source is 120Hz timing, the PureMotion function does not support this timing and will be gray out.

IMAGE | Advanced | Color Settings

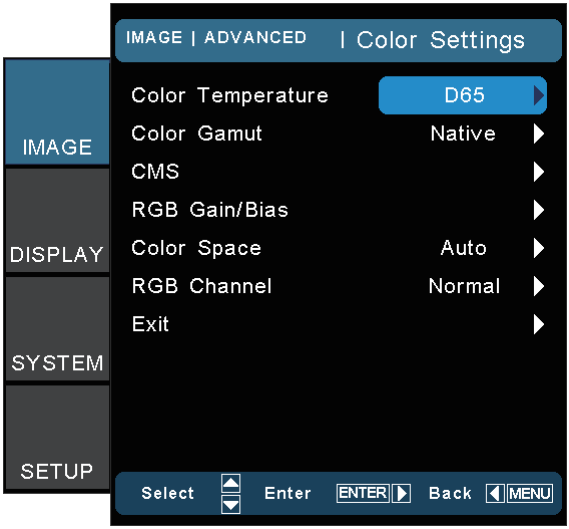

Color Temperature

Select a color temperature from D50, D65, D75, D83, D93 and Native.

Color Gamut

Select an appropriate color gamut from Native, DLP-C, HDTV, EBU or SMPTE-C.

CMS (Color Management System)

Press ► into the next menu and then use ▲ or ▼ to select item. Select one of the colors (R/G/B/C/M/Y) to adjust its x/y offset and brightness.

- Color: Use ◄ or ► to select from Red, Green, Blue, Cyan, Magenta or Yellow colors.
- x offset: Use ◄ or ► to adjust the x offset value of selected color.
- y offset: Use ◄ or ► to adjust the y offset value of selected color.
- Brightness: Use ◄ or ► to adjust the brightness value of selected color.
- Reset: Choose “Yes” to return the factory default settings for color adjustments.

RGB Gain/Bias

Press ► into the next menu and then use ▲ or ▼ to select item.

- Use ◄ or ► to select Red, Green, or Blue for brightness (Gain) and contrast (Bias).
- Reset: Choose “Yes” to return the factory default settings for color adjustments.

Color Space

Select an appropriate color matrix type from AUTO, RGB or YUV.

RGB Channel

Use ◄ or ► to select from Normal, Red, Green or Blue channels.

DISPLAY

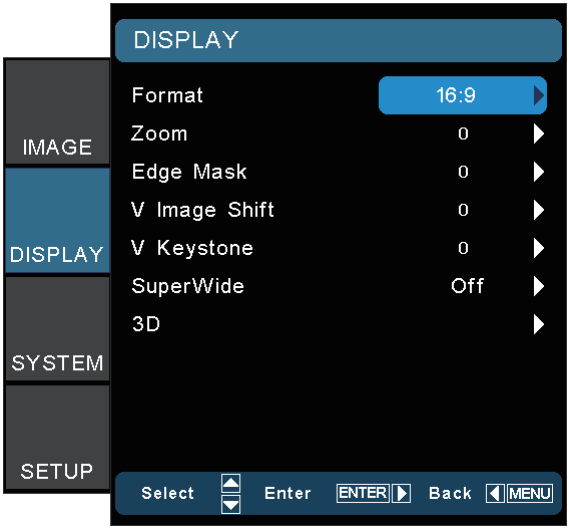

Format

Use this function to choose your desired aspect ratio.

- 4:3: This format is for 4x3 input sources.
- 16:9: This format is for 16x9 input sources, like HDTV and DVD enhanced for Widescreen TV.
- LBX: This format is for non-16x9, letterbox source and for users who use external anamorphic lens to display 2.35:1 aspect ratio using full resolution.
- Native: This format displays the original image without scaling.

Detail informations about LBX mode:

1. Some Letter-Box Format DVDs are not enhanced for 16x9 TVs. In this situation, the image will not look right when displayed in 16:9 mode. In this situation, please try to using the 4:3 mode to view the DVD. If the content is not 4:3, there will be black bars around the image in 16:9 display. For this type of content, you can use LBX mode to fill the image on the 16:9 display.
2. If you use an external anamorphic lens, this LBX mode also allows you to watch a 2.35:1 content (include Anamorphic DVD and HDTV film source) that support anamorphic wide is enhanced for 16x9 Display in a wide 2.35:1 image. In this case, there are no black bars. Lamp power and vertical resolution are fully utilized.

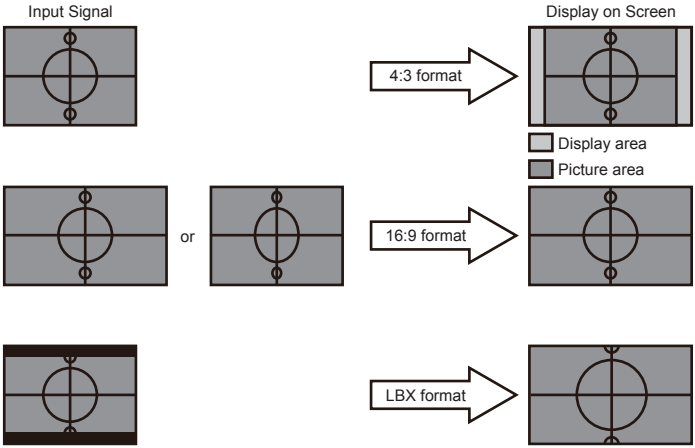

Zoom

- Press the ◄ to reduce the size of an image.
- Press the ► to magnify an image on the projection screen.

Edge Mask

- Press the ◄ to reduce the size of an image.
- Press the ► to magnify an image on the projection screen.

V Image Shift

Shift the projected image position vertically.

V Keystone

Press the ◄ or ► to adjust image distortion vertically and make a squarer image.

SuperWide

SuperWide is a feature that uses a special 2.0:1 aspect ratio screen enabling both 16:9 and 2.35:1 aspect ratio movies to be shown without black bars at the top and bottom of the screen.

- Off: Your desired aspect ratio can be selected 4:3, 16:9, LBX and Native.
- Auto: To solve the differences of the film formats, the option can keep the format in the same ratio.
- On (16:9): Only 16:9 format can be selected.
- On (2.35:1) Only 2.35:1 format can be selected.

3D

Press ► into the next menu and then use ▲ or ▼ to select item.

NOTE

- "SuperWide" is Off" as default.
- How to use "Super-Wide":
  1. Obtain a 2.0:1 aspect ratio screen.
  2. Switch Super-Wide ON.
  3. Align the projector image correctly on the screen.
  4. Enjoy movies without black bars.

DISPLAY | 3D

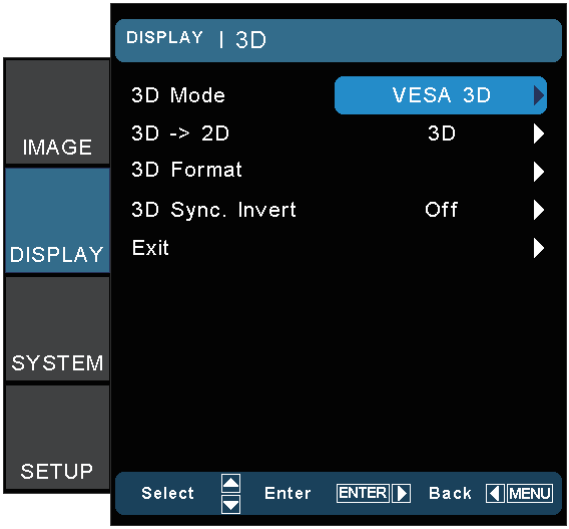

3D Mode

- DLP Link: Select “DLP Link” to use optimized settings for DLP Link 3D images. (For DLP glasses, please refer to page 16).
- VESA 3D: Select “VESA 3D” to use optimized setting for VESA 3D images. (For 3D emitter, please refer to page 13).

3D -> 2D

- 3D: Display 3D signal.
- L (Left): Display the left frame of 3D content.
- R (Right): Display the right frame of 3D content.

Note

- “3D Format” is only supported on non-HDMI 1.4a 3D timing.
- Press “Enter” to select 3D format.

3D Format

- Off: Press the “Off” to disable 3D format conversion.
- SBS: Display 3D signal in “Side-by-Side” format.
- Top and Bottom: Display 3D signal in “Top and Bottom” format.
- Frame Sequential: Display 3D signal in “Frame Sequential” format.

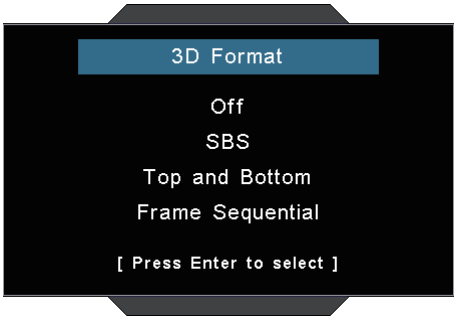

Note

- “3D sync. Invert” function wouldn’t save the setting. It will set to “Off” when powers on and changes source.

3D Sync. Invert

- Press the “On” to invert left and right frame contents.
- Press the “Off” for default frame contents.

SYSTEM

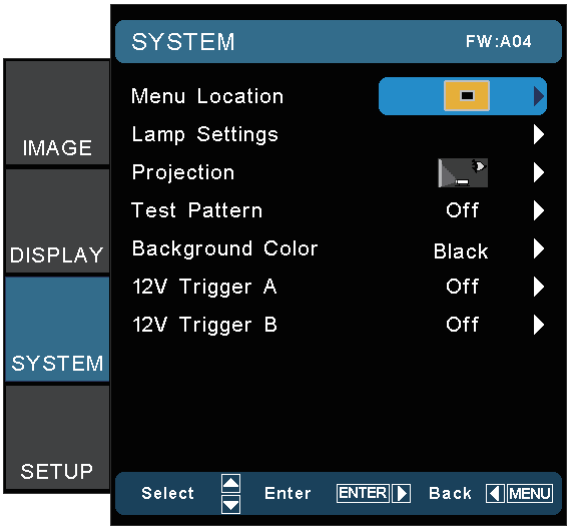

Note

❖ Rear-Desktop and Rear-Ceiling are to be used with a translucent screen.

Menu Location

Choose the menu location on the display screen.

Lamp Setting

Press ► into the next menu and then use ▲ or ▼ to select item.

Projection

- Front-Projection

  This is the default selection. The image is projected straight on the screen.

- Rear-Desktop

  When selected, the image will appear reversed.

- Front-Ceiling

  When selected, the image will turn upside down.

- Rear-Ceiling

  When selected, the image will appear reversed in upside down position.

❖ "Test Pattern" function will gray out when 3D is on.

Test Pattern

Display a test pattern. There are Grid, White and Off.

Background Color

Use this feature to display a "Blue", "Black", or "Gray" screen when no signal is available.

12V Trigger A

12V trigger A provides a standard trigger for motorized screens.

12V Trigger B

- Press the "Off" to disable the trigger.
- Press the "On" to enable the trigger and the programmable sub-menu. The sub-menu is accessed by selecting the "On" option then pressing the "Enter" button on the remote control. Checking an option in the sub-menu will activate the trigger when the corresponding display mode is selected. For the example, 4:3 has been selected – this means that Trigger B will be active when the projector display mode is set to 4:3. The trigger will be inactive for all the other display mode options.

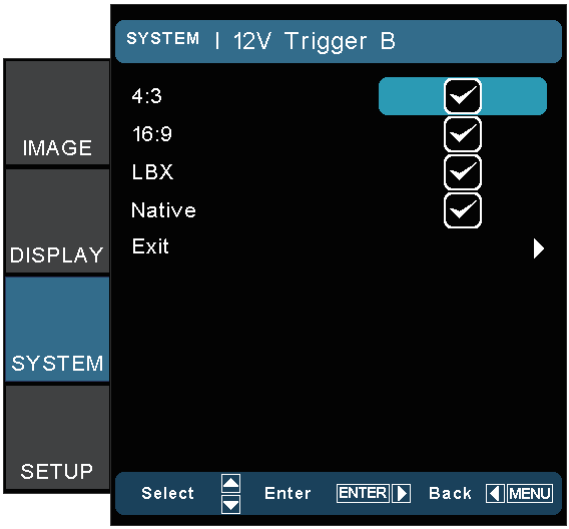

- Auto 235: When “Auto 235” is enabled, the projector will automatically detect when a 2.35:1 ratio presentation is shown and will activate the trigger on this port which, in turn, can be used to activate a motorised anamorphic lens assembly. The “Auto 235” setting and a motorised anamorphic lens assembly can be used in this way to provide a fully automated “Constant Height” projection system.
- Auto 3D: When “Auto 3D” is enabled, the projector will automatically detect when a 3D image is shown and will activate the trigger on this port.

SYSTEM | Lamp Settings

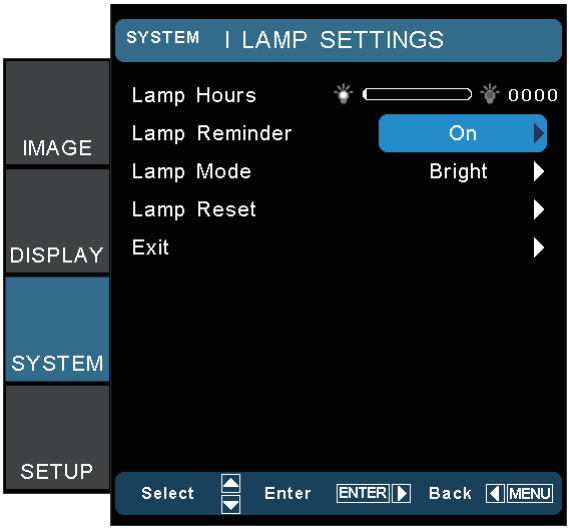

Lamp Hour

Display the cumulative lamp operating time.

Lamp Reminder

Choose this function to show or to hide the warning message when the changing lamp message is displayed. The message will appear up 30 hours before suggested replacement of lamp.

Lamp Mode

- Bright: Choose “Bright” to increase the brightness.
- STD: Choose “STD” to dim the projector lamp which will lower power consumption and extend the lamp life.
- Image AI
  Image AI improves the contrast of the picture by optimizing the brightness of the lamp according to the picture content.

Lamp Reset

Reset the lamp life hour after replacing the lamp.

Note

❖ “Lamp Mode” can separately have different settings for 2D and 3D.

SETUP

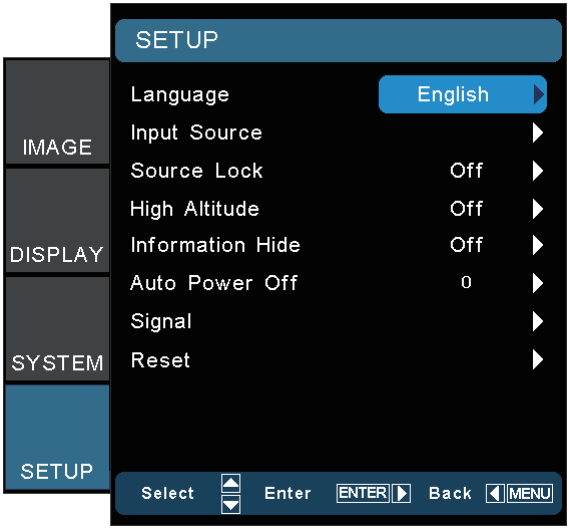

Language

Choose the multilingual OSD menu. Press ◄ or ► into the sub menu and then use the ▲ or ▼ to select your preferred language. Press “Select (Enter)” to finalize the selection.

Input Source

Enable input sources from HDMI 1, HDMI 2, Component, VGA and Video. Press ► into the next menu and then use ▲ or ▼ to select item. Press “Select (Enter)” to finalize the selection. The projector will not search inputs that are de-selected.

Source Lock

When this function is turned off, the projector will search for other signals if the current input signal is lost. When this function is turned on, it will search for a specified connection port.

High Altitude

Choose “On” to turn on High Altitude mode. Operates the fans at full speed continuously to allow for proper high altitude cooling of the projector.

Information Hide

- Press “On” to hide the info message.
- Press “Off” to show the “searching” message.

Auto Power Off

Set the interval of power-off of the system, if there is no signal input. (In minutes).

Signal

For RGB/Component Source

- Frequency: Change the display data frequency to match the frequency of your computer's graphic card. Use this function only if the image appears to flicker vertically.
- Phase: Synchronize the signal timing of the display with the graphic card. If the image appears to be unstable or flickers, use this function to correct it.
- H Position: Adjust the image horizontal position.
- V Position: Adjust the image vertical position.
- Automatic: Automatically selects the signal. If you use this function, the Frequency and Phase items are grayed out, and if Signal is not automatic, the Frequency and Phase items will appear for user to manually tune and saved in settings after that for next time projector turns off and on again.

For Video Source:

- White Level: Allow user adjust White Level when inputting SVideo or Video/CVBS signals.
- Black Level: Allow user adjust Black Level when inputting S-Video or Video/CVBS signals.
- Saturation: Adjust a video image from black and white to fully saturated color. Press the ◄ to decrease the amount of color in the image. Press the ► to increase the amount of color in the image.
- Hue: Adjust the color balance of red and green. Press the ◄ to increase the amount of green in the image. Press the ► to increase the amount of red in the image.
- IRE: Adjust measurement of composite video signals.

Reset

Return the adjustments and settings to factory default values.

- Current: Reset current signal's settings to factory default values.
- All: Return the settings for all menus to factory default values.

NOTE

❖ "Signal" is not supported when the input source is HDMI.

NOTE

❖ "IRE" is only supported on NTSC signal.

Troubleshooting

If you experience a problem with your projector, please refer to the following information. If a problem persists, please contact your local reseller or service center.

Image Problems

No image appears on-screen

- Ensure all the cables and power connections are correctly and securely connected as described in the “Installation” section.
- Ensure the pins of connectors are not crooked or broken.
- Check if the projection lamp has been securely installed. Please refer to the “Replacing the Lamp” section.
- Make sure you have removed the lens cap and the projector is switched on.

Image is out of focus

- Make sure the Lens cap is removed.
- Adjust the Focus Ring on the projector lens.
- Make sure the projection screen is between the required distance 4.9 to 32.8 feet (1.5 to 10.0 meters) from the projector.

The image is stretched when displaying 16:9 DVD title

- When you play anamorphic DVD or 16:9 DVD, the projector will show the best image in 16: 9 format on projector side.
- If you play the LBX format DVD title, please change the format as LBX in projector OSD.
- If you play 4:3 format DVD title, please change the format as 4:3 in projector OSD.
- If the image is still stretched, you will also need to adjust the aspect ratio by referring to the following:
- Please setup the display format as 16:9 (wide) aspect ratio type on your DVD player.

Image is too small or too large

- Adjust the zoom lever on the top of the projector.
- Move the projector closer to or further from the screen.
- Press “Menu” on the projector panel, go to “Display-->Format”. Try the different settings.

Image has slanted sides:

- If possible, reposition the projector so that it is centered on the screen and below the bottom of the screen.
- Use “Display-->V Keystone” from the OSD to make an adjustment.

Image is reversed

- Select “System-->Projection” from the OSD and adjust the projection direction.

Blurry double image

- Press “SBS Mode” button and switch to “Off” to avoid normal 2D image is blurry double image.

Two images, side-by-side format

- Press “SBS Mode” button and switch to “SBS” for input signal is HDMI 1.3 2D 1080i side-by-side.

Image does not display in 3D

- Check if the battery of 3D glasses is drained.
- Check if the 3D glasses is turned on.
- When the input signal is HDMI 1.3 2D (1080i side-by-side half), press “SBS Mode” button and switch to “SBS”.

Other Problems

The projector stops responding to all controls

- If possible, turn off the projector, then unplug the power cord and wait at least 20 seconds before reconnecting power.

Lamp burns out or makes a popping sound

- When the lamp reaches its end of life, it will burn out and may make a loud popping sound. If this happens, the projector will not turn on until the lamp module has been replaced. To replace the lamp, follow the procedures in the “Replacing the Lamp” section.

Remote Control Problems

If the remote control does not work

- Check the operating angle of the remote control is within ±25° both horizontally and vertically of on of the IR receivers on the projector.
- Make sure there are not any obstructions between the remote control and the projector. Move to within 6 m (20 ft) of the projector.
- Make sure batteries are inserted correctly.
- Replace batteries if they are exhausted.

LED Lighting Messages

- Power LED on: No signal; OSD menu appears and signal had been detected.
- Power LED off: Signal had been detected but OSD menu disappears.

Message	Power LED (Red)	Power LED (Blue)	Temp LED (Red)	Lamp LED (Orange)
Standby State (Input power cord)	Steady light	Off	Off	Off
Power on (Warming)	Off	Flashing	Off	Off
Power on and Lamp lighting	Off	Steady light *	Off	Off
Power off (Cooling)	Off	Flashing	Off	Off
Error (Lamp fail)	Flashing	Off	Off	Steady light
Error (Fan fail)	Flashing	Off	Flashing	Off
Error (Over Temp.)	Flashing	Off	Steady light	Off

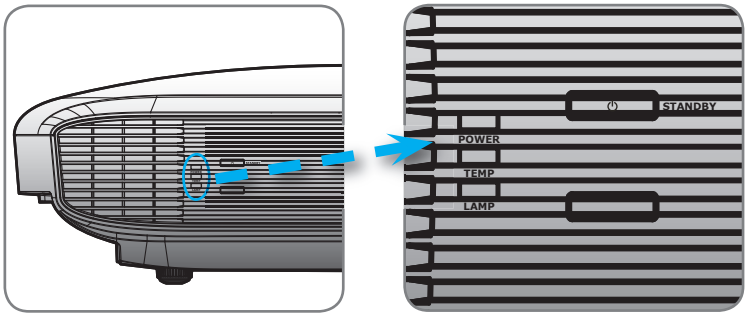

On Screen Messages

❖ Power down timer active:

❖ Lamp warning:

❖ Power off:

Replacing the Lamp

The projector automatically detects the lamp life. When the lamp life is nearing the end of use, you will receive a warning message.

When you see this message, please contact your local reseller or service center to change the lamp as soon as possible. Make sure the projector has been cooled down for at least 30 minutes before changing the lamp.

Warning: If ceiling mounted, please use caution when opening the lamp access panel. It is recommended to wear safety glasses if changing the bulb when ceiling mounted. “Caution must be used to prevent any loose parts from falling out of projector.”

Warning: Lamp compartment is hot! Allow it to cool down before changing lamp!

Warning: To reduce the risk of personal injury, do not drop the lamp module or touch the lamp bulb. The bulb may shatter and cause injury if it is dropped.

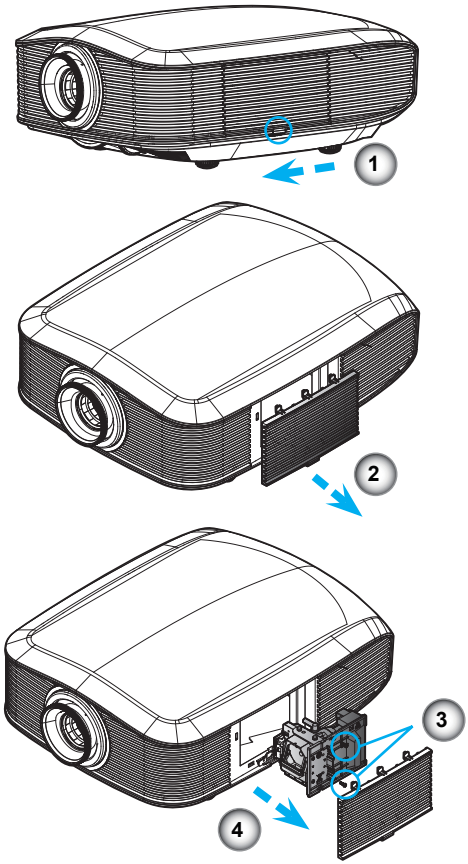

Lamp Replacing Procedure:

1. Switch off the power to the projector by pressing the Power button.
2. Allow the projector to cool down at least 30 minutes.
3. Disconnect the power cord.
4. Unlock the lamp cover. ❶
5. Push up and remove the cover. ❷
6. Use a screwdriver to remove the screw from the lamp module. ❸
7. Pull out the lamp module. ❹

To replace the lamp module, reverse the previous steps.

8. Turn on the projector and do “Lamp Reset” after the lamp module is replaced.
   Lamp Reset: (i)Press “Menu” -> (ii)Select “System” -> (iii)Select “Lamp Settings” ->(iv)Select “Lamp Reset” -> (v)Select “Yes”.

Compatibility Modes

❖ Computer Compatibility for PC

Signal	Resolution	Frequency H. (KHz)	Refresh Rate (Hz)	Video	Digital	Analog
NTSC	-	15.734	60	O	-	-
PAL/SECAM	-	15.625	50	O	-	-
	720 x 400	31.5	70	-	O	O
	720 x 400	37.9	85	-	O	O
	720 x 576		50	-	O	O
VGA	640 x 480	31.5	60	-	O	O
	640 x 480		67	-	O	O
	640 x 480	37.9	72.8	-	O	O
	640 x 480	37.5	75	-	O	O
	640 x 480	43.3	85	-		O
SVGA	800 x 600	35.2	56.3	-	O	O
	800 x 600	37.9	60.3	-	O	O
	800 x 600	46.9	75	-	O	O
	800 x 600	48.1	72.2	-	O	O
	800 x 600	53.7	85.1	-		O
XGA	1024 x 768	48.4	60	-	O	O
	1024 x 768	56.5	70.1	-	O	O
	1024 x 768	60	75	-	O	O
	1024 x 768	68.7	85	-		O
HD720	1280 x 720		50	-	O	O
	1280 x 720		60	-	O	O
	1280 x 720	92.62	120	-	O	O
WXGA	1280 x 768	47.4	60	-	O	O
	1280 x 768		75	-		O
	1280 x 768		85	-		O
WXGA-800	1280 x 800		60	-	O	O
SXGA	1280 x 1024	64	60	-	O	O
	1280 x 1024	80	75	-	O	O
SXGA+	1400 x 1050		60	-	O	O
UXGA	1600 x1200	75	60	-	O	O
HD1080	1920 x 1080		24	-	O	O
	1920 x 1080		50	-	O	O
	1920 x 1080		60	-	O	O
WUXGA	1920 x 1200		60	-		O

Signal	Resolution	Frequency H. (KHz)	Refresh Rate (Hz)	Video	Digital	Analog
HDTV	1920 x 1080i		50	-	O	O
	1920 x 1080i		60	-	O	O
	1920 x 1080p		24	-	O	O
	1920 x 1080p		50	-	O	O
	1920 x 1080p		60	-	O	O
	1280 x 720	45	60	O	-	-
	1280 x 720p		50	-	O	O
	1280 x 720p		60	-	O	O
SDTV	720 x 576	31.3	50	O	-	-
	720 x 576i		50	-	O	O
	720 x 576p		50	-	O	O
	720 x 480	31.5	60	O	-	-
	720 x 480i		60	-	O	O
	720 x 480p		60	-	O	O

❖ Computer Compatibility for MAC

Resolution	Refresh Rate (Hz)	Macbook compatibility		Macbook Pro (Intel) compatibility		Power Mac G5 compatibility		Power Mac G4 compatibility	
		Digital	Analog	Digital	Analog	Digital	Analog	Digital	Analog
800 x 600	60	O	O	O	O	-	-	O	O
800 x 600	72	O	O	O	O	-	O	O	O
800 x 600	75	O	O	O	O	-	O	O	O
800 x 600	85	-	O	-	O	-	O	-	O
1024 x 768	60	O	O	O	O	-	O	O	O
1024 x 768	70	O	O	O	O	-	O	O	O
1024 x 768	75	O	O	O	O	-	O	O	O
1024 x 768	85	-	O	-	O	-	O	-	O
1280 x 720	60	O	O	O	O	-	O	O	O
1280 x 768	60	O	O	O	O	-	-	O	O
1280 x 768	75	-	O	-	O	-	O	-	O
1280 x 768	85	-	O	-	O	-	-	-	O
1280 x 800	60	O	O	-	O	-	O	O	O
1280 x 1024	60	O	O	-	O	-	O	O	O
1280 x 1024	75	O	O	-	O	-	O	O	O
1920 x 1080	60	O	O	-	O	-	O	O	O
1920 x 1200	60	-	O	-	O	-	O	-	O

❖ 3D Input Video Compatibility

		Input Timing		
Input Resolution	HDMI 1.4a 3D Input	1280 x 720p @ 50Hz	Top-and-Bottom	
		1280 x 720p @ 60Hz	Top-and-Bottom	
		1280 x 720p @ 50Hz	Frame packing	
		1280 x 720p @ 60Hz	Frame packing	
		1920 x 1080i @ 50 Hz	Side-by-Side (Half)	
		1920 x 1080i @ 60 Hz	Side-by-Side (Half)	
		1920 x 1080p @ 24 Hz	Top-and-Bottom	
		1920 x 1080p @ 24 Hz	Frame packing	
	HDMI 1.3 3D Content	1920 x 1080i @ 50Hz	Side-by-Side (Half)	While 3D Format is “SBS”
		1920 x 1080i @ 60Hz	Side-by-Side (Half)	
		1280 x 720p @ 50Hz	Side-by-Side (Half)	
		1280 x 720p @ 60Hz	Side-by-Side (Half)	
		1920 x 1080i @ 50Hz	Top-and-Bottom	While 3D Format is “Top and Bottom”
		1920 x 1080i @ 60Hz	Top-and-Bottom	
		1280 x 720p @ 50Hz	Top-and-Bottom	
		1280 x 720p @ 60Hz	Top-and-Bottom	
	2D Input (include HDMI/VGA port)	1024 x 768 @ 120Hz	Frame sequential	Auto apply 3D Mode
		1024 x 768 @ 120Hz	Frame sequential	
	2D Input (include HDMI/VGA/ Component/ Composite port)	480i	HQFS	While 3D Format is “Frame sequential”
		576i	HQFS	

RS232 Commands and Protocol Function List

RS232 Pin Assignments

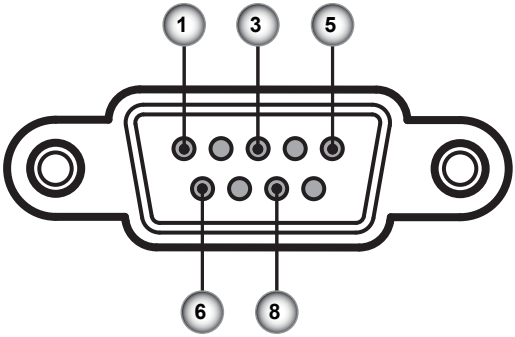

Pin no.	Name	I/O (From Projector Side)
1	NC	__
2	RXD	IN
3	TXD	OUT
4	NC	__
5	GND	Signal Ground
6	NC	__
7	RTS	__
8	CTS	__
9	NC	__

RS232 Protocol Function List

Baud Rate	9600	Note: There is a <CR> after all ASCII commands, 0D is the HEX code for <CR> in ASCII code
Data Bits	8	
Parity	None	
Stop Bits	1	
Flow Control	None	
UART16550 FIFO	Disable	
Projector Return (Pass): P		
Projector Return (Fail): F		XX=01-99, projector's ID, XX=00 is for all projectors

-	X	X	X	X	X		
Lead Code	Projector ID		Command ID				space

Function							ASCII
Power			On/Off			n=1/n=0 & 2	~XX00 n
Re-sync							~XX01 n
Direct Source Commands		HDMI 1				n=1	~XX12 n
		VGA 1				n=5	
		VGA 1 Component				n=8	
		Video				n=10	
		Component RCA				n=14	
		HDMI 2				n=15	
IMAGE	Display Mode	Cinema				n=1	~XX20 n
		Bright				n=2	
		Photo				n=3	
		Reference				n=4	
		User				n=5	
		ISF Day				n=7	
		ISF Night				n=8	
		3D				n=9	
	Contrast					n= -50 - +50	~XX22 n
	Brightness					n= -50 - +50	~XX21 n
	Color					n= -50 - +50	~XX45 n
	Tint					n= -50 - +50	~XX44 n
	Sharpness					n= 0 - +15	~XX23 n
	Advanced	Noise Reduction				n= 0 - 10	~XX196 n
		Gamma	Film			n=1	~XX35 n
				Curve Type		n=-7 - +7	~XX182 n
				Offset		n=-5 - +5	~XX183 n
				Reset		n=1	~XX206 n
			Video			n=2	~XX35 n
				Curve Type		n=-7 - +7	~XX184 n
				Offset		n=-5 - +5	~XX185 n
				Reset		n=1	~XX207 n
			Graphics			n=3	~XX35 n
				Curve Type		n=-7 - +7	~XX186 n
				Offset		n=-5 - +5	~XX187 n
				Reset		n=1	~XX208 n
			Standard			n=4	~XX35 n
				Curve Type		n=-7 - +7	~XX188 n
				Offset		n=-5 - +5	~XX189 n
				Reset		n=1	~XX209 n
		PureEngine	PureMotion	OFF		n=0	~XX190 n
				LOW		n=1	~XX190 n
				MED		n=2	~XX190 n
				HIGH		n=3	~XX190 n
			PureDetail	OFF		n=0	~XX41 n
				1		n=1	~XX41 n
				2		n=2	~XX41 n
				3		n=3	~XX41 n
			PureColor	OFF		n=0	~XX42 n
				1		n=1	~XX42 n
				2		n=2	~XX42 n
				3		n=3	~XX42 n
				4		n=4	~XX42 n
				5		n=5	~XX42 n
			PureEngine Demo	OFF		n=0	~XX197 n
				H Split		n=1	~XX197 n
				V Split		n=2	~XX197 n
		DynamicBlack	OFF			n=0	~XX191 n
			Cinema 1			n=1	
			Cinema 2			n=2	
		Color Settings / RGB Gain/Bias	RGB Gain/Bias	Red Gain		n= -50 - +50	~XX24 n
				Green Gain		n= -50 - +50	~XX25 n
				Blue Gain		n= -50 - +50	~XX26 n
				Red Bias		n= -50 - +50	~XX27 n
				Green Bias		n= -50 - +50	~XX28 n
				Blue Bias		n= -50 - +50	~XX29 n
				Reset		n=1	~XX33 n
			Color Temperature		D50	n=1	~XX210 n
					D65	n=2	~XX210 n
					D75	n=4	~XX210 n
					D83	n=5	~XX210 n
					D93	n=6	~XX210 n
					Native	n=7	~XX210 n
			Color Gamut		Native	n=1	~XX211 n
					DLP cinema	n=2	~XX211 n
					HDTV	n=3	~XX211 n
					EBU	n=4	~XX211 n
					SMPT-C	n=5	~XX211 n
			CMS	Red		n=1	~XX212 n
				Green		n=2	~XX212 n
				Blue		n=3	~XX212 n
				Cyan		n=4	~XX212 n
				Yellow		n=5	~XX212 n
				Magenta		n=6	~XX212 n
				x offset	-50 ~ 50	n= -50 - +50	~XX213 n
				y offset	-50 ~ 50	n= -50 - +50	~XX214 n
				Reset		n=1	~XX215 n
			Color Space	Auto		n=1	~XX37 n
				RGB (0-255)*	*RGB (0-255) supports when HDMI is detected	n=2	
				RGB(16 - 235)*	*RGB(16 - 235)supports when HDMI is detected	n=4	
				YUV		n=3	
DISPLAY		Format	4:3			n=1	~XX60 n
			16:9			n=2	
			LBX			n=5	
			Native			n=6	
			Auto235			n=8	
			SuperWide			n=9	
		Edge Mask				n=0-5	~XX61 n
		Zoom				n=0-10	~XX62 n
		V Image Shift (16:9)				n= -50 - +50	~XX64 n
		V Keystone				n= -30 - +30	~XX66 n
		3D	3D Mode	DLP Link/VESA 3D		n=1/n=2	~XX230 n
			3D->2D	3D / L / R	2D->2D; 3D->3D / 3D->L /3D->R	n=1/n=2/n=3	~XX400 n
			3D Format	Off/SBS/Top and Bottom/Frame Sequential	Decoding HDMI1.3 3D timing	n=0/n=1/n=3/n-4	~XX405 n
			3D Sync. Invert	On/Off		n=0/n=1	~XX231 n
		SuperWide	Off			n=0	~XX199 n
			On (16:9)			n=1	
			On (2.35:1)			n=2	
			Auto			n=3	

Function							ASCII
SYSTEM	Menu Location	Top Left				n=1	~XX72 n
		Top Right				n=2	
		Centre				n=3	
		Bottom Left				n=4	
		Bottom Right				n=5	
	Lamp Setting	Lamp Hour	Lamp hour			n=1/ n=2	~XX108 n
		Lamp Reminder	On/Off			n=1/n=0 & 2	~XX109 n
		Lamp Mode	Bright/STD/ Image AI			n=1/n=2/n=3	~XX110 n
		Lamp Reset	Yes			n=1	~XX111 n
			No			n=2	
	Projection	Front-Desktop				n=1	~XX71 n
		Rear-Desktop				n=2	
		Front-Ceiling				n=3	
		Rear-Ceiling				n=4	
	Test Pattern		None / Grid / White			n=0/n=1/n=2	~XX195 n
	Background Color	Blue				n=1	~XX104 n
		Black				n=2	
		Gray				n=6	
	12v Trigger A		Off/On			n=0/n=1	~XX192 n
	12v Trigger B		Off/On/Auto235/Auto 3D			n=0/n=1/n=2/n=3	~XX193 n
			4:3	4:3 check			~XX205 0
				4:3 uncheck			~XX205 1
			16:9	16:9 check			~XX205 2
				16:9 uncheck			~XX205 3
			Letter Box	letter box check			~XX205 4
				letter box uncheck			~XX205 5
			Native	native check			~XX205 6
				native uncheck			~XX205 7
SETUP	Language	English				n=1	~XX70 n
		German				n=2	
		French				n=3	
		Italian				n=4	
		Spanish				n=5	
		Portuguese				n=6	
		Polish				n=7	
		Dutch				n=8	
		Swedish				n=9	
		Norwegian/Danish				n=10	
		Finnish				n=11	
		Greek				n=12	
		Traditional Chinese				n=13	
		Simplified Chinese				n=14	
		Japanese				n=15	
		Korean				n=16	
		Russian				n=17	
		Hungarian				n=18	
		Czech				n=19	
		Arabic				n=20	
		Thai				n=21	
		Turkish				n=22	
	Input Source	HDMI 1				n=1	~XX39 n
		HDMI 2				n=7	
		VGA				n=5	
		3 x RCA Comnponent				n=8	
		Video				n=10	
	Source Lock		On/Off			n=1/n=0 & 2	~XX100 n
	High Altitude		On/Off			n=1/n=0 & 2	~XX101 n
	Information Hide		On/Off			n=1/n=0 & 2	~XX102 n
	Auto Power Off (min)					n=0-180	~XX106 n
	Signal	Automatic	Enable/Disable			n=1/n=0	~XX91 n
		Frequency\Tracking				n=0~ 100	~XX73 n
		Phase				n= -50 - +50	~XX74 n
		H. Position				n= -50 - +50	~XX75 n
		V. Position				n= -50 - +50	~XX76 n
		White level				n= -50 - +50	~XX200 n
		Black level				n= -50 - +50	~XX201 n
		Saturation				n= -50 - +50	~XX202 n
		Hue				n= -50 - +50	~XX203 n
		IRE	0 IRE / 7.5 IRE			n=1/n=0	~XX204 n
	Reset		Yes			n=1	~XX112 n
			No			n=2	
Projector ID						n = 00 - 99	~XX79 n
Reset System Alert						n=1	~XX99 n
Information from Projector Automatically							
when:	Standby Mode					a=0	
	Warming up					a=1	
	Cooling Down					a=2	
	Out of Range					a=3	
	Lamp Fail					a=4	
	Thermal Switch Error					a=5	
	Fan Lock					a=6	
	Over Temperature					a=7	
	Lamp Hours Running Out					a=8	
READ/Return Information from projector							
	Information					n=1	~XX150 n
		a = Power State	Off/On			a=0/1	
		b = Lamp Hour				bbbb	
		c = Input Source Commands	None			c=00	
			VGA			c=02	
			Video			c=05	
			HDMI1			c=07	
			HDMI2			c=08	
			Component			c=11	
		d = Firmware Version				dddd	
		e = Display mode	None			e=0	
			Cinema			e=1	
			Bright			e=2	
			Movie			e=3	
			sRGB			e=4	
			User(1)			e=5	
			User2			e=6	
			ISF Day			e=7	
			ISF Nigh			e=8	
			3D			e=9	
	Model Name						~XX151 n
			Depends			a=0/1/2	
	RS232 Version No					n=1	~XX152 n
			Depends			a=??	
		Input Source Commands	None / VGA / Video / HDMI1 / HDMI2 / Component			n=1	~XX121 n
		Software Version				n=1	~XX122 n
		Display Mode	Cinema / Bright / Photo / Reference / User / ISF Day / ISF Night / 3D			n=1	~XX123 n
		Power State	On/Off			n=1	~XX124 n
		Brightness				n=1	~XX125 n
		Contrast				n=1	~XX126 n
		Aspect Ratio	4:3 / 16:9 / LBX / Native			n=1	~XX127 n
		Color Temperature	D50/D65/D75/D83/D93/Native			n=1	~XX128 n
		Projection Mode	Front-Desktop Rear-Desktop Front-Ceiling Rear-Ceiling			n=1	~XX129 n
	RS232 Commands for HD83 Remote command le TBD						

Remote Control							
		Up/Page +				n=10	~XX140 n
		Left/Source				n=11	
		Enter (for projection MENU)				n=12	
		Right/Re-SYNC				n=13	
		Down/Page -				n=14	
		Menu				n=20	
		Re-sync				n=41	

Ceiling Mount Installation

1. To prevent damage to your projector, please use the Optoma ceiling mount.
2. If you wish to use a third party ceiling mount kit, please ensure the screws used to attached a mount to the projector met the following specifications:
   - Screw type: M6
   - Maximum screw length: 12mm
   - Minimum screw length: 10mm

Note

- Please note that damage resulting from incorrect installation will invalidate the warranty.

Warning:
1. If you buy a ceiling mount from another company, please be sure to use the correct screw size. Screw size will vary depending on the thickness of the mounting plate.
2. Be sure to keep at least 10cm gap between the ceiling and the bottom of the projector.
3. Avoid installing the projector near a heat source.

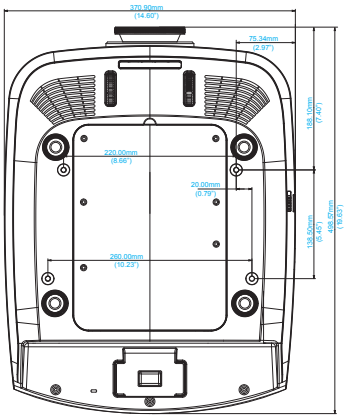

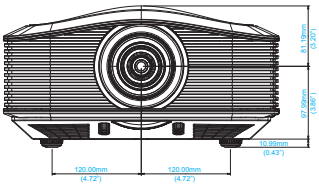

Optoma Global Offices

For service or support please contact your local office.

USA

3178 Laurelview Ct.
Fremont, CA 94538, USA
www.optomausa.com

888-289-6786
510-897-8601
services@optoma.com

Canada

2420 Meadowpine Blvd., Suite #105
Mississauga, ON, L5N 6S2, Canada
www.optoma.ca

888-289-6786
510-897-8601
services@optoma.com

Latin America

3178 Laurelview Ct.
Fremont, CA 94538, USA
www.optomausa.com

888-289-6786
510-897-8601
services@optoma.com

Europe

42 Caxton Way, The Watford Business Park Watford, Hertfordshire, WD18 8QZ, UK
www.optoma.eu
Service Tel: +44 (0)1923 691865

+44 (0) 1923 691 800
+44 (0) 1923 691 888
service@tsc-europe.com

Benelux BV

Randstad 22-123
1316 BW Almere
The Netherlands
www.optoma.nl

+31 (0) 36 820 0253
+31 (0) 36 548 9052

France

Bâtiment E
81-83 avenue Edouard Vaillant
92100 Boulogne Billancourt, France

+33 1 41 46 12 20
+33 1 41 46 94 35
savoptoma@optoma.fr

Spain

C/ José Hierro,36 Of. 1C 28522
Rivas VaciaMadrid,
Spain

+34 91 499 06 06
+34 91 670 08 32

Deutschland

Wiesenstrasse 21 W
D40549 Düsseldorf,
Germany

+49 (0) 211 506 6670
+49 (0) 211 506 66799
info@optoma.de

Scandinavia

Lerpeveien 25
3040 Drammen
Norway

+47 32 98 89 90
+47 32 98 89 99
info@optoma.no

PO.BOX 9515
3038 Drammen
Norway

Korea

WOOMI TECH.CO.,LTD.
4F, Minu Bldg. 33-14, Kangnam-Ku,
seoul,135-815, KOREA

+82+2+34430004
+82+2+34430005

Japan

東京都足立区綾瀬3-25-18
株式会社オーエスエム
サポートセンター: 0120-46-5040

info@osscreen.com
www.os-worldwide.com

Taiwan

5F., No. 108, Minchiuan Rd.
Shindian City,
Taipei Taiwan 231, R.O.C.
www.optoma.com.tw

+886-2-2218-2360
+886-2-2218-2313
services@optoma.com.tw
asia.optoma.com

Hong Kong

Unit A, 27/F Dragon Centre,
79 Wing Hong Street,
Cheung Sha Wan,
Kowloon, Hong Kong

+852-2396-8968
+852-2370-1222
www.optoma.com.hk

China

5F, No. 1205, Kaixuan Rd.,
Changning District
Shanghai, 200052, China

+86-21-62947376
+86-21-62947375
www.optoma.com.cn

Regulation & Safety Notices

This appendix lists the general notices of your projector.

FCC Notice

This device has been tested and found to comply with the limits for a Class B digital device pursuant to Part 15 of the FCC rules. These limits are designed to provide reasonable protection against harmful interference in a residential installation. This device generates, uses and can radiate radio frequency energy and, if not installed and used in accordance with the instructions, may cause harmful interference to radio communications.

However, there is no guarantee that interference will not occur in a particular installation. If this device does cause harmful interference to radio or television reception, which can be determined by turning the device off and on, the user is encouraged to try to correct the interference by one or more of the following measures:

- Reorient or relocate the receiving antenna.
- Increase the separation between the device and receiver.
- Connect the device into an outlet on a circuit different from that to which the receiver is connected.
- Consult the dealer or an experienced radio/television technician for help.

Notice: Shielded cables

All connections to other computing devices must be made using shielded cables to maintain compliance with FCC regulations.

Caution

Changes or modifications not expressly approved by the manufacturer could void the user's authority, which is granted by the Federal Communications Commission, to operate this projector.

Operation Conditions

This device complies with Part 15 of the FCC Rules. Operation is subject to the following two conditions:

1. This device may not cause harmful interference and
2. This device must accept any interference received, including interference that may cause undesired operation.

Notice: Canadian users

This Class B digital apparatus complies with Canadian ICES-003.

Remarque à l'intention des utilisateurs canadiens

Cet appareil numerique de la classe B est conforme a la norme NMB-003 du Canada.

Declaration of Conformity for EU countries

- EMC Directive 2004/108/EC (including amendments)
- Low Voltage Directive 2006/95/EC
- R & TTE Directive 1999/5/EC (if product has RF function)

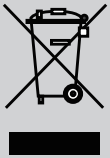

Disposal instructions

Do not throw this electronic device into the trash when discarding. To minimize pollution and ensure utmost protection of the global environment, please recycle it.