USA's primary source for projector lamps
myprojectorlamps

PROJECTOR OWNER'S MANUAL

Optoma

HD151X / HD36

Need a replacement lamp for this projector?

www.myprojectorlamps.com

Original manufacturer manual, provided unmodified as a courtesy of MyProjectorLamps.com.
All trademarks belong to their respective owners.

CONTENTS

Usage Notice **2**
Safety Instructions 2
Introduction **5**
Projector Features 5
Package Overview 6
Projector Overview 7
Using the Product **9**
Control Panel 9
Connection Ports 10
Remote Control 12
Installing the Batteries 14
Remote Control Operation 15
Connection **16**
Connecting a computer or monitor 18
Connecting Video source devices 20
Operation **23**
Powering On/Off the Projector 23
Adjusting the Projector Height 24
Adjusting the Projector Zoom and Focus 24
Adjusting Projection Image Size 25
Menu Operation 27
Appendix **46**
Replacing the Dust Filter 46
Replacing the Lamp 47
Ceiling mount installation 49
Compatibility Modes 50
IR Code 53
RS232 Commands and Protocol Function List 54
Troubleshooting 60
Optoma Global Offices 62
Regulation & Safety Notices 65

Usage Notice

Safety Instructions

Read all of these instructions before you operate your projector and save for future reference.

1. Read instructions
   All the safety and operating instructions should be read before the appliance is operated.
2. Notes and warnings
   All notes and warnings in the operating instructions should be adhered to.
3. Cleaning
   Unplug the projector from the wall socket before cleaning. Use a damp cloth for cleaning the projector housing. Do not use liquid or aerosol cleaners.
4. Accessories
   Do not place this product on an unstable cart, stand, or table. The product may fall, causing serious damage to the product.
   Keep the plastic packing materials (from the projector, accessories and optional parts) out of the reach of children as these bags may result in death by suffocation. Be particularly careful around the small children.
5. Ventilation
   The projector is equipped with ventilation holes (intake) and ventilation holes (exhaust). Do not block or place anything near these slots, or internal heat build-up may occur, causing picture degradation or damage to the projector.
6. Power sources
   Check that the operating voltage of your unit is identical with the voltage of your local power supply.
7. Servicing
   Do not attempt to service this projector yourself. Refer all servicing to qualified service personnel.
8. Replacement parts
   When replacement parts are required, be sure that the replacement parts are specified by the manufacture. Unauthorized substitutions may result in fire, electric shock or other hazards.

9. Moisture Condensation
   Never operate this projector immediately after moving it from a cold location to a warm one. When the projector is exposed to such a change in temperature, moisture may condense on the lens and the crucial internal parts. To prevent the unit from possible damage, do not use the projector for at least 2 hours when there is an extreme or sudden change in temperature.

Notes on the AC Power Cord

AC Power Cord must meet the requirement of countries where you use this projector. Please confirm your AC plug type with the graphics below and ensure that the proper AC Power Cord is used. If the supplied AC Power Cord does not match your AC outlet, please contact your sales dealer. This projector is equipped with a grounding type AC line plug. Please ensure that your outlet fits the plug. Do not defeat the safety purpose of this grounding type plug. We highly recommend using a video source device also equipped with a grounding type AC line plug to prevent signal interference due to voltage fluctuations.

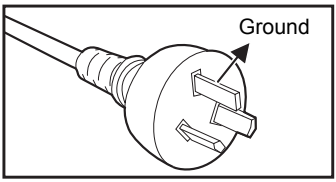

For Australia and
Mainland China

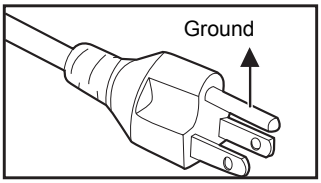

For the U.S.A. and Canada

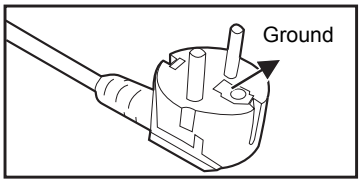

For Continental Europe

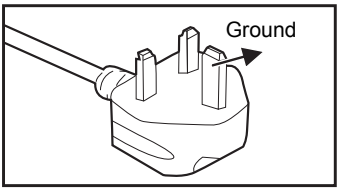

For the U.K.

Introduction

Projector Features

The projector integrates high-performance optical engine projection and a user - friendly design to deliver high reliability and ease of use.
The projector offers the following features:

- Single chip 0.65" Texas Instruments DLP® technology
- Full 3D 1080P (1920 x 1080 pixels)
- Compatibility with Macintosh® computers
- Compatibility with NTSC, PAL, SECAM and HDTV
- D-Sub 15-pin terminal for analog video connectivity
- RS-232 connector for serial control
- Quick Resume feature
- Eco mode for more economic usage
- HDMI compatibility
- Support wireless dongle via internal power of VGA 2
- 3D VESA port for 3D glasses emitter
- USB type A port for power charging

Note

- ***The information in this manual is subject to change without notices.***
- ***The reproduction, transfer or copy of all or any part of this document is not permitted without express written consent.***

Package Overview

Unpack and inspect the box contents to ensure all parts listed below are in the box. If something is missing, please contact Optoma customer service.

Standard Accessories

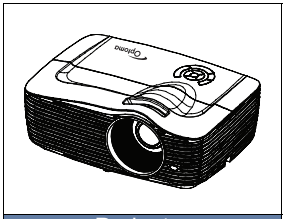

Projector

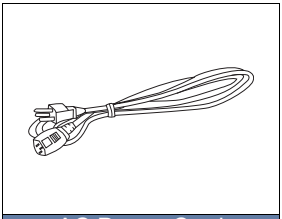

AC Power Cord

☑ User's Manual
☑ Warranty Card
☑ Quick Start Card
☑ WEEE Card
(for EMEA only)

Documentation

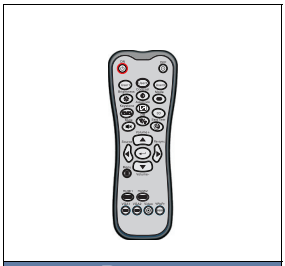

Remote

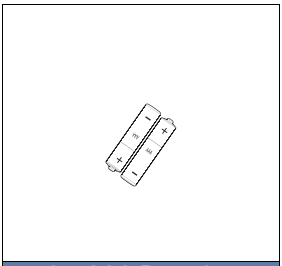

2 x AAA Batteries

Optional accessories

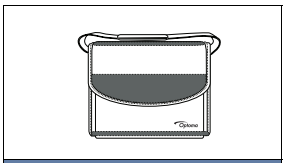

Carry Bag

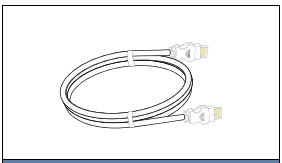

HDMI cable

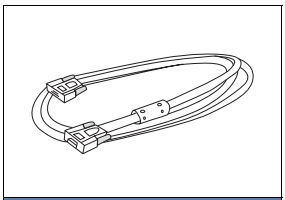

VGA Cable

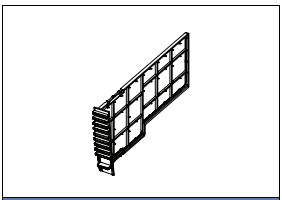

Dust filter

Note

- ***Optional accessories vary depending on model, specification and region.***

Projector Overview

Front View

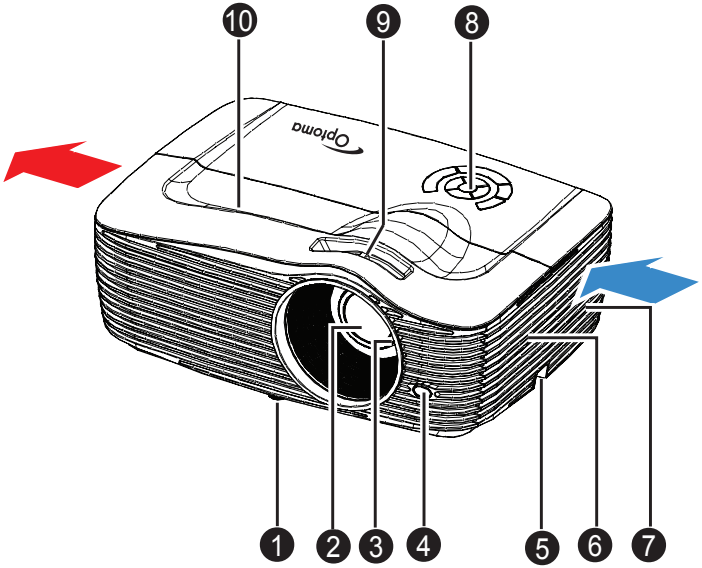

1. Front adjustment foot
2. Projection lens
3. Focus ring
4. Front IR remote control sensor
5. Security bar
6. Speaker
7. Ventilation holes
8. Control panel
9. Zoom ring
10. Top cover

Rear View

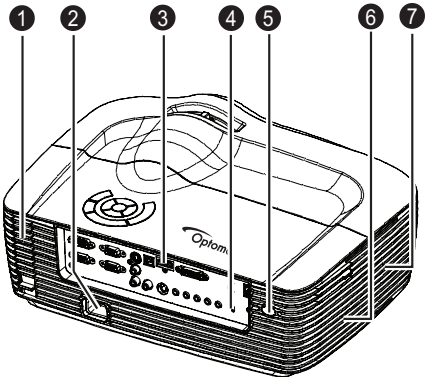

1. Optional dust filter
2. AC power socket
3. Connection ports
4. Kensington lock
5. Rear IR remote control sensor
6. Speaker
7. Ventilation holes

Bottom View

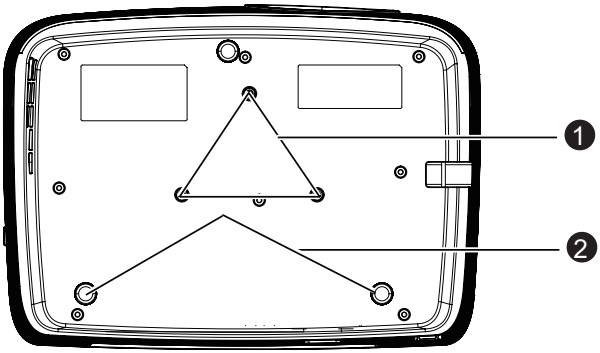

1. Ceiling mount holes
2. Rear adjustment feet

Note

- ***This projector can be used with a ceiling mount for support. The ceiling mount is not included in the package.***
- ***Contact your dealer for information to mount the projector on a ceiling.***

Using the Product

Control Panel

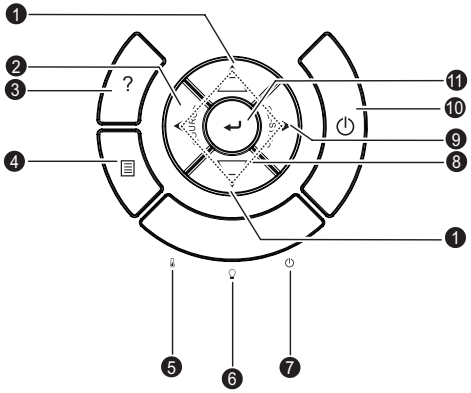

❶ **Keystone (▼/▲)**
Manually correct distorted images resulting from an angled projection.

❷ **SOURCE**
Switch between input signals.

❸ **HELP**
Display Help menu.

❹ **MENU**
Display or exit the on-screen display menus.

❺ **TEMP** (Temp LED indicator)
Refer to “LED Indicator Messages” on page 61.

❻ **LAMP** (Lamp LED indicator)
Refer to “LED Indicator Messages” on page 61.

❼ **POWER** (Power LED indicator)
Refer to “LED Indicator Messages” on page 61.

❽ **Four directional buttons**
Use four directional buttons to select items or make adjustments to your selection.

❾ **Re-SYNC**
Automatically synchronize the projector to the input source.

❿ **⏻ Power**
Turn the projector on or off.

⓫ **ENTER**
Confirm your item selection.

Connection Ports

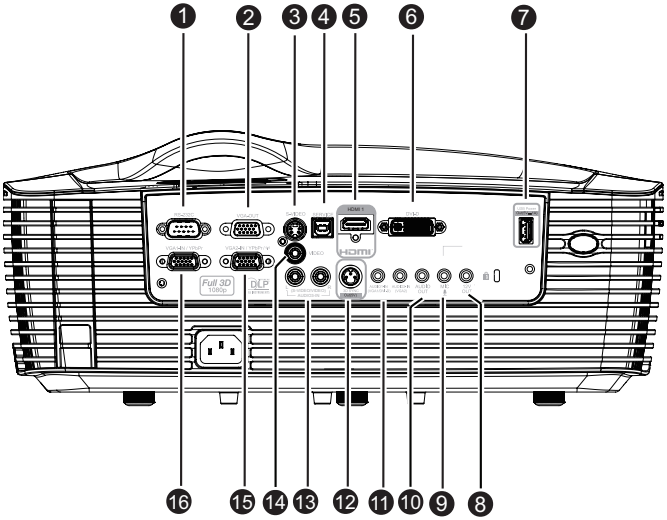

❶ **RS-232C**
When operating the projector via a computer, connect this to the controlling computer's RS-232C port.

❷ **VGA-OUT**
Connect to an external monitor.
In Eco mode (Standby), VGA-OUT is disabled.
In Active mode (Standby), VGA-OUT is enabled.

❸ **S-VIDEO**
Connect S-Video output from video equipment to this jack.

❹ **MOUSE/SERVICE**
This connector supports firmware update, remote mouse and page up/ down.

- ***Remote mouse function is not available in some models.***

❺ **HDMI**
Connect HDMI output from video equipment to this jack.

❻ **DVI-D**
Connect DVI-D output from computer to this jack.

❼ **Power Out (5V DC 1A)**
Power charging (5V DC 1A).

- ***Do not connect devices that require or draw more power than 5v 1A. Over drawing can cause damage and create safety concerns.***

❽ **12V OUT**
12V DC out

❾ **MIC**
Microphone input jack.

❿ **AUDIO OUT**
Connect to a speaker or other audio input equipment.

⓫ **AUDIO1-IN (VGA1/DVI-D)/AUDIO2-IN (VGA2)**
Connect an audio output from a computer to this jack.

⓬ **3D SYNC OUT**
For 3D glasses emitter

⓭ **AUDIO3-IN (L/R) (S-VIDEO/VIDEO)**
Connect an audio output from a video device to this jack.

⓮ **VIDEO**
Connect composite video output from video equipment to this jack.

⓯ **VGA2-IN / YPbPr /** ((ᵖ))
Connect image input signal (analog RGB or component) to this jack.
Support wireless dongle via internal power of VGA 2.

⓰ **VGA1-IN / YPbPr**
Connect image input signal (analog RGB or component) to this jack.

Remote Control

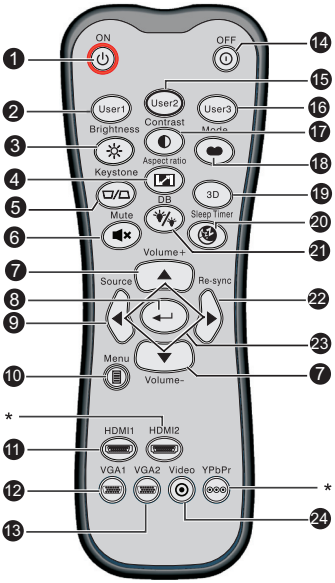

❶ **ON**
Turn the projector on.

❷ **User1**
User definable key for customized functions including DVI-D/S-VIDEO/ Color Settings/Color Temp./Gamma/Test Pattern/AV Mute. Default is Color Settings.

❸ **Brightness**
Display the setting bar for adjustment of brightness.

❹ **Aspect Ratio**
Toggle to switch the display aspect ratio.

❺ **Keystone (+/-)**
Manually correct distorted images resulting from an angled projection.

❻ **Mute**
Cut off the sound temporarily.

❼ **Volume+/Volume-**
Adjust the volume level.

❽ **Enter**
Confirmed selections.

❾ **Source**
Switch between input signals.

⑩ **Menu**
Display or exit the on-screen display menus.

⑪ **HDMI1**
Switch between HDMI and DVI-D signal.

⑫ **VGA1**
Display input signal (analog RGB or component) from **VGA1-IN / YPbPr** port.

⑬ **VGA2**
Display input signal (analog RGB or component) from **VGA2-IN / YPbPr** port.

⑭ **OFF**
Turn the projector off.

⑮ **User2**
User definable key for customized functions including DVI-D/S-VIDEO/ Color Settings/Color Temp./Gamma/Test Pattern/AV Mute. Default is Color Temp.

⑯ **User3**
User definable key for customized functions including DVI-D/S-VIDEO/ Color Settings/Color Temp./Gamma/Test Pattern/AV Mute. Default is Gamma.

⑰ **Contrast**
Adjust the image contrast.

⑱ **Mode**
Toggle to switch display mode.

⑲ **3D**
Turn on or off 3D function.

⑳ **Sleep Timer**
Turn on/off the sleep timer.

㉑ **DynamicBlack**
Turn on/off the dynamicblack.

㉒ **Re-sync**
Automatically synchronize the projector to the input source.

㉓ **Four directional buttons**
Use four directional buttons to select items or make adjustments to your selection.

㉔ **Video**
Toggle between Video and S-Video

Note

- ***(*) No function for this model.***

Installing the Batteries

1. Open the battery cover in the direction shown.

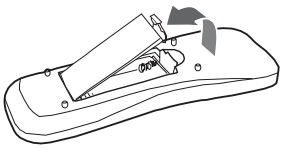

2. Install batteries as indicated by the diagram inside the compartment.

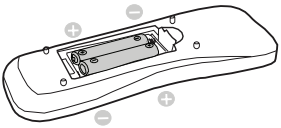

3. Close the battery cover into position.

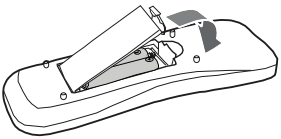

Caution

- ***Risk of explosion if battery is replaced by an incorrect type.***
- ***Dispose of used batteries according to the instructions.***
- ***Make sure the plus and minus terminals are correctly aligned when loading a battery.***

Note

- ***Keep the batteries out of the reach of children. There is a danger of death by accidentally swallowing the batteries.***
- ***Remove batteries from remote control when not using for extended periods.***
- ***Do not dispose of the used batteries along with household waste. Dispose of used batteries according to local regulations.***
- ***Danger of explosion may happen if batteries are incorrectly replaced. Replce all the batteries with new ones.***
- ***Batteries should not be in or near to fire or water, keep batteries in a dark, cool and dry place.***
- ***If suspect battery leakage, wipe out the leakage and then replace new batteries. If the leakage adheres to your body or clothes, rinse well with water immediately.***

Remote Control Operation

Point the remote control at the infrared remote sensor and press a button.

- Operating the projector from the front

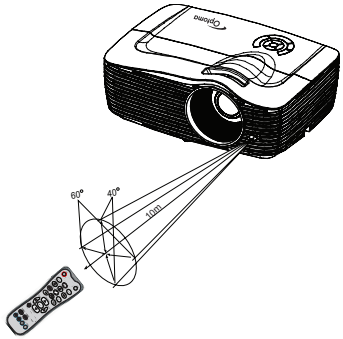

- Operating the projector from the rear

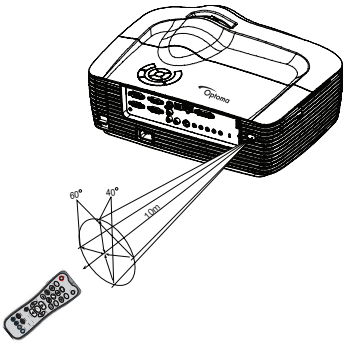

Note

- ***The remote control may not operate when there is sunlight or other strong light such as a fluorescent lamp shining on the remote sensor.***
- ***Operate the remote control from a position where the remote sensor is visible.***
- ***Do not drop the remote control or jolt it.***
- ***Keep the remote control out of locations with excessively high temperature or humidity.***
- ***Do not get water on the remote control or place wet objects on it.***
- ***Do not disassemble the remote control.***

Connection

When connecting a signal source to the projector, be sure to:

1. Turn all equipment off before making any connections.
2. Use the correct signal cables for each source.
3. Ensure the cables are firmly inserted.

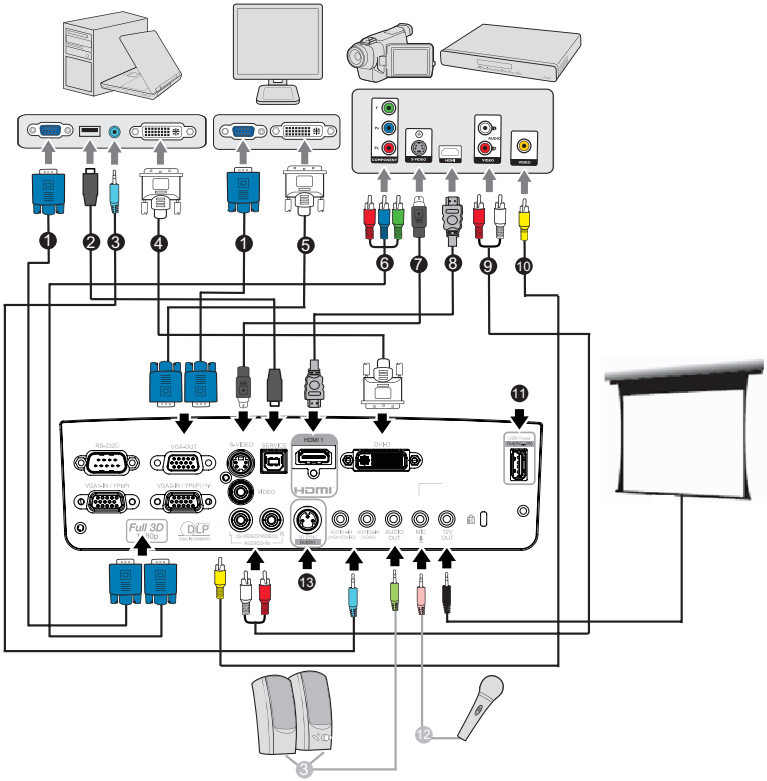

1. ..... *VGA cable (D-Sub to D-Sub)
2. ..... *USB cable (B type to A type)
3. .....*Audio cable
4. .....*DVI-D cable
5. ..... *VGA to DVI-A cable
6. .....*VGA (D-Sub) to HDTV (RCA) cable
7. .....*S-Video cable
8. .....*HDMI cable

9. .....*Audio L/R cable
10. ..... *Composite video cable
11. .....USB port for power charging
12. ..... *Microphone 3.5 mini jack cable
13. .....*3D glasses emitter

Note

- ***Due to the difference in applications for each country, some regions may have different accessories.***
- ***(*) Optional Accessory***

Connecting a computer or monitor

Connecting a computer

The projector provides two VGA input sockets that allow you to connect them to both IBM® compatible and Macintosh® computers. A Mac adapter is needed if you are connecting legacy version Macintosh computers.

To connect the projector to a notebook or desktop computer:

1. Take the supplied VGA cable and connect one end to the D-Sub output socket of the computer.
2. Connect the other end of the VGA cable to the **VGA1/YPbPr** or **VGA2/YPbPr** signal input socket on the projector.

Important

- ***Many notebooks do not turn on their external video ports when connected to a projector. Usually a key combo like FN + F3 or CRT/LCD key turns the external display on/off. Locate a function key labeled CRT/LCD or a function key with a monitor symbol on the notebook. Press FN and the labeled function key simultaneously. Refer to your notebook's documentation to find your notebook's key combination.***

Connecting a monitor

If you want to view your presentation close-up on a monitor as well as on the screen, you can connect the **VGA-OUT** signal output socket on the projector to an external monitor with a VGA cable following the instructions below:

To connect the projector to a monitor:

1. Connect the projector to a computer as described in "Connecting a computer" on page 18.
2. Take a suitable VGA cable (only one supplied) and connect one end of the cable to the D-Sub input socket of the video monitor.

   Or if your monitor is equipped with a DVI input socket, take a VGA to DVI-A cable and connect the DVI end of the cable to the DVI input socket of the video monitor.
3. Connect the other end of the cable to the **VGA-OUT** socket on the projector.

VGA-OUT loop through:

During working mode:

1. If VGA1 is projecting out, VGA-OUT source will be VGA1.
2. If VGA2 is projecting out, VGA-OUT source will be VGA2.
3. If VGA1 and VGA2 are all have sources, default VGA-OUT is VGA1.
4. If none of VGA1 and VGA2 is projecting out, VGA-OUT is disabled.

During Standby

1. VGA-OUT will keep the latest display VGA source signal. Default VGA-OUT is VGA1.
2. If the projector is in Power Mode (Standby) < 0.5W, VGA-OUT is disabled.

Connecting Video source devices

You can connect your projector to various Video source devices that provide any one of the following output sockets:

- HDMI
- Component Video
- S-Video
- Video (composite)

You need only connect the projector to a Video source device using just one of the above connecting methods, however each provides a different level of video quality. The method you choose will most likely depend upon the availability of matching terminals on both the projector and the Video source device as described below:

Terminal name	Terminal appearance	Reference	Picture quality
HDMI	HDMI	“Connecting an HDMI source device” on page 21	Best
Component Video	VGA1/YPbPr or VGA2/YPbPr	“Connecting a Component Video source device” on page 21	Better
S-Video	S-VIDEO	“Connecting an S-Video source device” on page 22	Good
Video	VIDEO	“Connecting a composite Video source device” on page 22	Normal

Connecting an HDMI source device

Examine your Video source device to determine if it has a set of unused HDMI output jacks available:

- If so, you can continue with this procedure.
- If not, you will need to reassess which method you can use to connect to the device.

To connect the projector to an HDMI source device:

1. Take an HDMI cable and connect one end to the HDMI output of the HDMI source device.
2. Connect the other end of the HDMI cable to the HDMI input on the projector.

Connecting a Component Video source device

Examine your Video source device to determine if it has a set of unused Component Video output sockets available:

- If so, you can continue with this procedure.
- If not, you will need to reassess which method you can use to connect to the device.

To connect the projector to a Component Video source device:

1. Take a VGA (D-Sub) to HDTV (RCA) cable and connect the end with 3 RCA type connectors to the Component Video output sockets of the Video source device. Match the color of the plugs to the color of the sockets; green to green, blue to blue, and red to red.
2. Connect the other end of the cable (with a D-Sub type connector) to the **VGA1/YPbPr** or **VGA2/YPbPr** socket on the projector.

Important

- ***If the selected video image is not displayed after the projector is turned on and the correct video source has been selected, check that the Video source device is turned on and operating correctly. Also check that the signal cables have been connected correctly.***

Connecting an S-Video source device

Examine your Video source device to determine if it has an unused S-Video output socket available:

- If so, you can continue with this procedure.
- If not, you will need to reassess which method you can use to connect to the device.

To connect the projector to an S-Video source device:

1. Take an S-Video cable and connect one end to the S-Video output socket of the Video source device.
2. Connect the other end of the S-Video cable to the **S-VIDEO** socket on the projector.

Important

- ***If the selected video image is not displayed after the projector is turned on and the correct video source has been selected, check that the Video source device is turned on and operating correctly. Also check that the signal cables have been connected correctly.***
- ***If you have already made a Component Video connection between the projector and this S-Video source device using Component Video connections, you need not connect to this device using an S-Video connection as this makes an unnecessary second connection of poorer picture quality. See "Connecting Video source devices" on page 20 for details.***

Connecting a composite Video source device

Examine your Video source device to determine if it has a set of unused composite Video output sockets available:

- If so, you can continue with this procedure.
- If not, you will need to reassess which method you can use to connect to the device.

To connect the projector to a composite Video source device:

1. Take a Video cable and connect one end to the composite Video output socket of the Video source device.
2. Connect the other end of the Video cable to the **VIDEO** socket on the projector.

Important

- ***If the selected video image is not displayed after the projector is turned on and the correct video source has been selected, check that the Video source device is turned on and operating correctly. Also check that the signal cables have been connected correctly.***
- ***You need only connect to this device using a composite Video connection if Component Video and S-Video inputs are unavailable for use. See "Connecting Video source devices" on page 20 for details.***

Operation

Powering On/Off the Projector

Powering On the Projector:

1. Connect the AC power cord and relevant peripheral signal cable(s) to the projector.
2. Press ⏻ to turn on the projector.
   The projector takes a minute or so to warm up.
3. Turn on your source (computer, notebook, DVD, etc.). The projector automatically detects your source.
   - If you are connecting multiple sources to the projector simultaneously, press **SOURCE** on the projector or **Source** on the remote control to select your desired signal or press your desired signal key on the remote control.

⚠ **Warning**

■*Never look into the lens when the lamp is on. This can damage your eyes.*
■*This focal point concentrates high temperature. Do not place any object near it to avoid possible fire hazard.*

Powering Off the Projector:

1. Press ⏻ to turn off the projector lamp. You will see a message "Power off? Press Power again" appear on the screen.
2. Press ⏻ again to confirm.
   - The cooling fans continue to operate for cooling cycle.
   - When the Power LED becomes steady red, the projector has entered stand-by mode.
   - If you want to turn the projector back on, you must wait until the projector has completed the cooling cycle and has entered stand-by mode. Once in stand-by mode, simply press ⏻ to restart the projector.
3. Disconnect the AC power cord from the electrical outlet and the projector.
4. Do not turn on the projector right after power off.

⚠ **Warning**

■*When Quick Resume is on, if turning off the projector accidentally and Quick Resume selected within a period of 100 seconds, the projector will instantly power on again.*
■*When Quick Resume is off, if turning off the projector, users need to wait until the cooling process is finished and then restart the projector. It will take a few minutes because the fan will keep running until the internal temperature is reduced to certain level.*

Adjusting the Projector Height

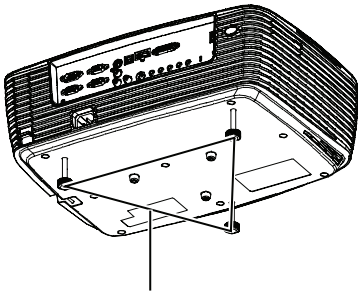

The projector is equipped with three adjustment feet to adjust the image height.

1. To raise or lower the image, turn the front adjustment foot.
2. To level the image on the screen, turn the rear adjustment feet to fine-tune the height.

Note

- ***To avoid damaging the projector, make sure that the adjustment feet are fully retracted before placing the projector in its carrying case.***

Adjusting the Projector Zoom and Focus

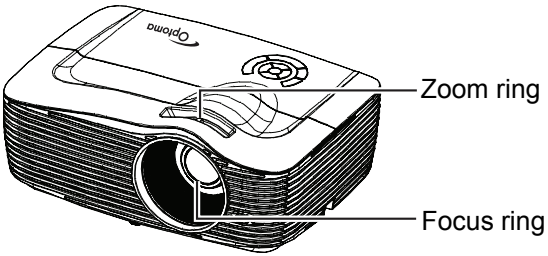

1. Focus the image by rotating the focus ring. A still image is recommended for focusing.
2. Adjust the image size by rotating the zoom ring.

Adjusting Projection Image Size

Refer to the graphic and table below to determine the screen size and projection distance.

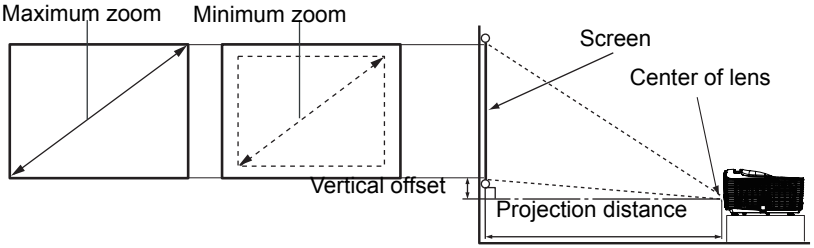

Screen size Diagonal [inch (cm)]	16:9 Screen			
	Projection distance [feet (m)]		Image height [inch (cm)]	Vertical offset [inch (cm)]
	(min. zoom)	(max. zoom)		
30 (76)	3.0 (0.9)	4.6 (1.4)	15 (37)	2.2 (6)
40 (102)	4.0 (1.2)	6.0 (1.8)	20 (50)	2.9 (7)
60 (152)	6.0 (1.8)	9.0 (2.7)	29 (75)	4.4 (11)
80 (203)	8.0 (2.4)	12.0 (3.7	39 (100)	5.9 (15)
100 (254)	10.0 (3.1)	15.0 (4.6)	49 (125)	7.4 (19)
120 (305)	12.0 (3.7)	18.0 (5.5)	59 (149)	8.8 (22)
150 (381)	15.0 (4.6)	22.5 (6.9)	74 (187)	11 (28)
200 (508)	20.0 (6.1	30.0 (9.2)	98 (249)	14.7 (37)
250 (635)	25.0 (7.6)	37.5 (11.4)	123 (311)	18.4 (47)
300 (762)	30.0 (9.2)	45.0 (13.7)	147 (374)	22.1 (56)

Note

- ***Position the projector in a horizontal position; other positions can cause heat build-up and damage to the projector.***
- ***Keep a space of 30 cm or more between the sides of the projector.***
- ***Do not use the projector in a smoky environment. Smoke residue may build-up on critical parts and damage the projector or its performance.***
- ***Consult with your dealer for special installation such as suspending from a ceiling.***

Adjusting the position using the vertical lens shift function

If the projector is not positioned right in front of the center of the screen, you can adjust the vertical position of projected image by moving the vertical lens ring within the shift range of the lens.
The display position can be shifted upward up to 17% elevation of the display. (When turn the vertical lens shift ring to the right (left), the display moves up (down)).

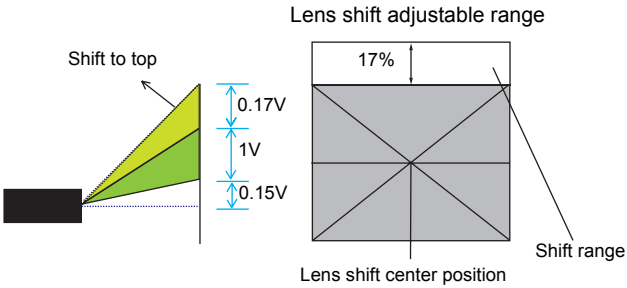

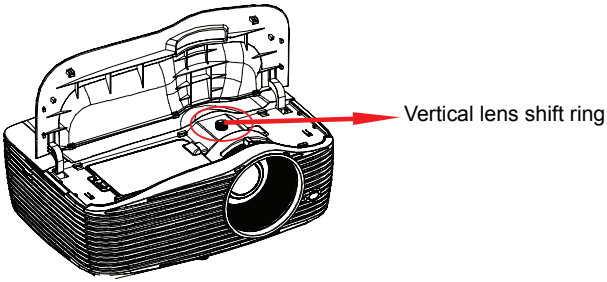

Attention

Please note the following s when using the projector.

- ***Do not touch the lens while it is moving as this could cause injury to the fingers.***
- ***Never allow children to touch the lens.***

Menu Operation

The projector has multilingual on-screen display menus that allow you to make image adjustments and change a variety of settings.

How to operate

1. To open the OSD menu, press “Menu” on the Remote Control or Projector Keypad.
2. When OSD is displayed, use ◄/► key to select to select any item in the main menu. While making a selection on a particular page, press ▼ or “Enter key to enter sub menu.
3. Use ▲/▼ key to select the desired item and press ◄/►/”Enter” key to enter the Single-Item-Menu.
4. Use the ◄/► key to adjust the value. Use “Enter” to confirm the selection.
5. Select the next item to be adjusted in the sub menu and adjust as described above.
6. Press ”Menu” to go back to Sub-Menu.
7. To exit, press “Menu” again. The OSD menu will close and the projector will automatically save the new settings.

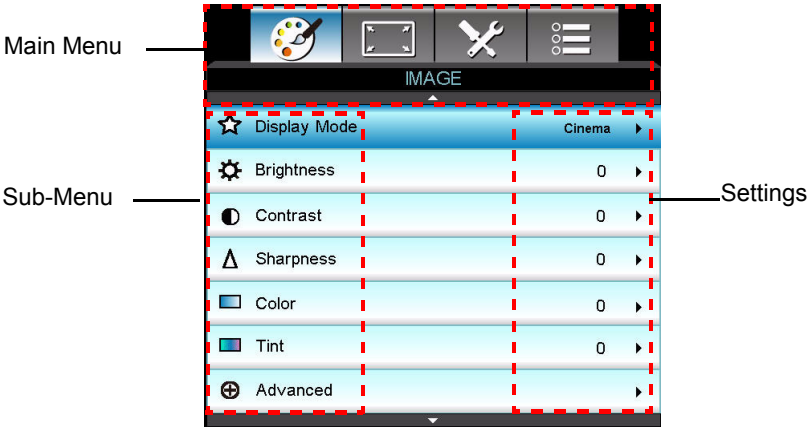

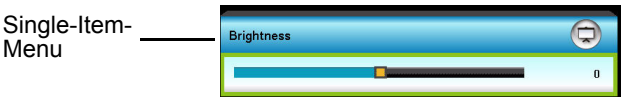

Menu tree

Main Menu	Sub-Menu			Single-Item Menu
IMAGE	Display Mode			Cinema / Reference / Vivid / Bright / Game / 3D / User /ISF Day / ISF Night
	Brightness			
	Contrast			
	Sharpness			
	Color			
	Tint			
	Advanced	Noise Reduction		0~10
		Gamma		Film / Video / Graphics / 2.2 / 1.8 / 2.0 / 2.6
		BrilliantColor™		
		DynamicBlack		On / Off
		Color Temp.		Warm / Standard / Cool/ Cold
		Color Settings	Red	Hue / Saturation / Gain
			Green	Hue / Saturation / Gain
			Blue	Hue / Saturation / Gain
			Cyan	Hue / Saturation / Gain
			Magenta	Hue / Saturation / Gain
			Yellow	Hue / Saturation / Gain
			White	Red / Green / Blue
			Reset	
			Exit	
		Color Space		**Not HDMI Input:** Auto / RGB / YUV **HDMI Input:** Auto/ RGB(0~255) / RGB(16~235)/ YUV

IMAGE	Advanced	Signal	Automatic	On / Off
			Phase (VGA)	
			Frequency (VGA)	
			H. Position (VGA)	
			V. Position (VGA)	
			Exit	
		Exit		
	Reset			Yes / No
DISPLAY	Format			4:3 / 16 :9 / LBX / Native / Auto / Superwide
	Edge Mask			
	Zoom			
	Image Shift	H		
		V		
	V Keystone			
	Auto Keystone			On / Off
	3D	3D Mode		Off / DLP-Link / VESA 3D
		3D--->2D		3D / L / R
		3D Format		Auto / SBS / Top and Bottom / Frame Sequential
		3D Sync Invert		On / Off

SETUP	Language			English / Deutsch / Français / Italiano / Español / Português / Svenska / Nederlands / Norsk/Dansk / Polski / Русский / Suomi / ελληνικά / Magyar / Čeština / عربي 繁體中文 / 簡体中文 / 日本語 / 한국어 / ไทย / Türkçe / Farsi / Vietnamese / Romanian / Indonesian
	Projection			
	Menu Location			
	Security	Security		On / Off
		Security Timer		Month / Day / Hour
		Change Password		
		Exit		
	Projector ID			
	Audio Settings	Internal Speaker		On / Off
		Mute		On / Off
		Volume	Audio	
			Mic	
		Audio Input		Default / Audio 1 / Audio 2 / Audio 3
	Advanced	Logo		Default / Neutral / User
		Logo Capture		
		Closed Captioning		Off / CC1 / CC2
		Exit		

OPTIONS	Input Source			VGA1 / VGA2 / Video / S-video / HDMI / DVI
	Source Lock			On / Off
	High Altitude			On / Off
	Information Hide			On / Off
	Keypad Lock			On / Off
	Test Pattern			None / Grid / White
	12V Trigger			On / Off / Auto 3D
	IR Function			On / Front / Back / Off
	Background Color			Black / Red / Blue / Green / White
	Remote Settings	User1		DVI-D/S-VIDEO/Color Settings/Color Temp./Gamma/ Test Pattern/AV Mute
		User2		DVI-D/S-VIDEO/Color Settings/Color Temp./Gamma/ Test Pattern/AV Mute
		User3		DVI-D/S-VIDEO/Color Settings/Color Temp./Gamma/ Test Pattern/AV Mute

OPTIONS	Advanced	Direct Power On		On / Off
		Signal Power On		On / Off
		Auto Power Off (min.)		
		Sleep Timer (min.)		
		Quick Resume		On / Off
		Power Mode (Standby)		Active / Eco
	Lamp Settings	Lamp Hour		
		Lamp Reminder		On / Off
		Lamp Mode		Bright / Eco
		Lamp Reset		Yes / No
		Exit		
	Optional Filter Settings	Optional Filter Installed		Yes / No
		Filter Usage Hours		
		Filter Reminder		Off / 300hr / 500hr / 800hr / 1000hr
		Filter Reset		Yes / No
		Exit		
	Reset			Yes / No

IMAGE

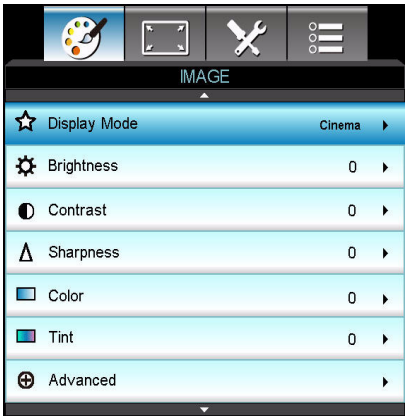

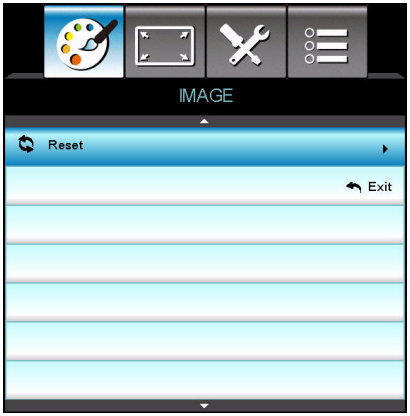

Display Mode

There are many factory presets optimized for various types of images.

- Cinema: For home theater.
- Reference: This mode is intended to reproduce, as close as possible, the image the way the movie director intended. Color, color temperature, brightness, contrast and gamma settings are all configured to standard reference levels.
- Vivid: Optimized to produce strikingly bright colorful images.
- Bright: Maximum brightness from PC input.
- Game: For game content.
- 3D: Recommended setting for 3D mode enabled. Any further adjustments by the user in 3D will be saved in this mode for further use.
- User: User's settings.
- ISF Day: Optimize the image with the ISF Day mode to be perfectly calibrated and high picture quality.
- ISF Night: Optimize the image with the ISF Night mode to be perfectly calibrated and high picture quality.

Brightness

Brighten or darken the image.

Contrast

Set the difference between light and dark areas.

Sharpness
Sharpen or soften the image.

Color
Adjust a video image from black and white to fully saturated color.

Tint
Shift colors toward red or green.

Note

- ***"Color" and "Tint" functions are only supported under Video mode.***

Advanced

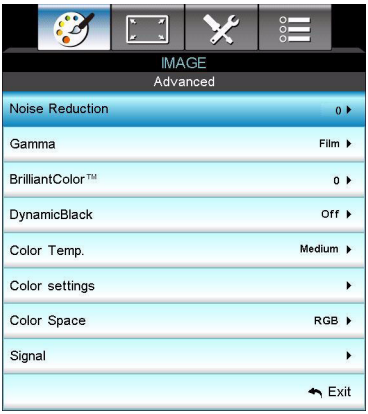

Noise Reduction
The Noise Reduction reduces the amount of visible noise interlaced signals.

Gamma
This allows you to choose a degamma table that has been fine-tuned to bring out the best image quality for the input.

- Film: for home theater.
- Video: for video or TV source.
- Graphics: for image source.
- 2.2/1.8/2.0/2.6: for PC or video source.

BrilliantColor™
This adjustable item utilizes a new color-processing algorithm and system level enhancements to enable higher brightness while providing true, more vibrant colors in picture. The range is from "1" to "10". If you prefer a stronger enhanced image, adjust toward the maximum setting. For a smoother, more natural image, adjust toward the minimum setting.

DynamicBlack

Dynamic Black enables the projector to automatically optimize the brightness of the display during dark/light movie scenes to be shown in incredible detail.

Color Temp.

If set to cold temperature, the image looks more blue. (cold image)
If set to standard temperature, the image maintains normal colorings for white.
If set to warm temperature, the image looks more red. (warm image)

Color Settings

Press ◄/►/"Enter" key to enter the next menu as below and then use ▲/▼/◄/► key to select color. Press "Enter" to finalize the selection.

- Red/Green/Blue/Cyan/Magenta/Yellow/White: Use ▲/▼ to toggle Hue/Saturation/Gain and then use ◄/► to adjust the value.
- Reset: Choose "Yes" to return the factory default settings for color adjustments.

Color Space

Select an appropriate color matrix type from AUTO, RGB, RGB (0-255)(*), RGB (16-235)(*) or YUV.

Note

(*) for HDMI only.

Signal

- Automatic: Automatically selects the singal. If you use this function, the Phase, frequency items are grayed out, and if Signal is not automatic, the phase, frequency items will appear for user to manually tune and saved in settings after that for next time projector turns off and on again.
- Phase: Synchronize the signal timing of the display with the graphic card. If the image appears to be unstable or flickers, use this function to correct it.
- Frequency: Change the display data frequency to match the frequency of your computer's graphic card. Use this function only if the image appears to flicker vertically.

- H. Position: Adjust the image left or right within the projection area.
- V. Position: Adjust the image up or down within the projection area.

Reset

Return the display parameters on IMAGE menu to the factory default settings.

DISPLAY

Format

Use this function to choose your desired aspect ratio.

16 : 9 screen	480i/p	576i/p	1080i/p	720p	PC
4:3	1440x1080 center				
16:9	1920x1080 center				
LBX	1920x1440 center, then get the central 1920x1080 image to display.				
Native	1:1 mapping centered				
Auto (Default)	If this format is select, Screen type will auto become 16:9 (1920 x 1080). If source is 4:3, auto resize to 1440 x 1080. If source is 16:9 auto resize to 1920 x 1080. If source is 16:10 auto resize to 1920 x 1200 and cut 1920 x 1080 area to display.				
Superwide	Scale to 2534 x 1426 (132% Enlarge), then get the central 1920x1080 image to display. Ps: End-user can use this format to see non-subtitle of 2.35:1 source to fulfill 100% of 1080p DMD.				

Edge Mask

Edge Mask function removes the noise in a video image. Overscan the image to remove video encoding noise on the edge of video source.

Note

- ***Each I/O has different setting of "Edge Mask".***
- ***"Edge Mask" and "Zoom" can't work at same time.***

Zoom

Zoom in and out the images.

Image Shift
Shift the projected image position horizontally and vertically.

V Keystone
Adjust image distortion vertically. If the image looks trapezoidal, this option can help make the image rectangular.

Note

- ***Keystone adjustment might affect the complete presentation of the OSD menu.***
- ***When adjusting the V Keystone, Auto Keystone will be set at "Off" automatically.***

Auto Keystone
Automatically correct distorted images resulting from an angled projection.

3D

3D Mode

- Off: Select “Off” to turn off 3D mode.
- DLP Link: Select “DLP Link” to use optimized settings for DLP Link 3D glasses.
- VESA 3D: Select “VESA 3D” to use optimized settings for VESA 3D glasses.

3D--->2D

- 3D: Select 3D format.
- L: Select left eye data.
- R: Select right eye data.

3D Format

- SBS: Use this mode for “Side-by-side” format 3D content.
- Top and Bottom: Use this mode for “Top and Bottom” format 3D content.
- Frame Sequential: Use this mode for “Frame Sequential” format 3D content.

3D Sync. Invert

- Press the “On” to invert left and right frame contents.
- Press the “Off” for default frame contents.

SETUP

Language

Select the language used by the on-screen menu. Press ◄/►/"Enter" key to enter the sub menu and then use the ▲/▼/◄/► key to select your preferred language. Press "Enter" to finalize the selection.

Projection

Adjust the picture to match the orientation of the projector: upright or upside-down, in front of or behind the screen. Invert or reverse the image accordingly.

Menu Location

Choose the menu location on the display screen.

Security

Security

- On: Choose "On" to use security verification when the turning on the projector.
- Off: Choose "Off" to be able to switch on the projector without password verification.

Security Timer

Use this function to set the how long (Month/Day/Hour) the projector can be used. Once this time has elapsed you will be requested to enter your password again.

Change Password

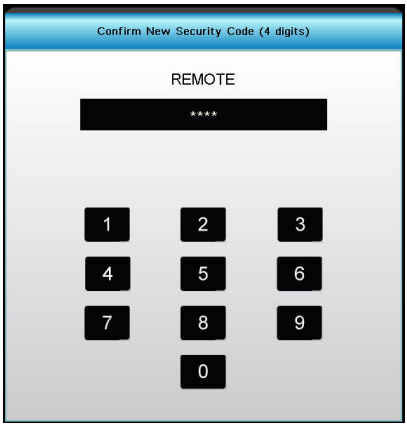

- First time:

1. Press “Enter” to set the password.
2. The password has to be 4 digits.
3. Use arrows buttons on the remote to choose number icons in OSD for password entering and then press "Enter" key to confirm your password.

- Change Password:

1. Press “Enter” to input old password.
2. Use arrow buttons to choose current password and then press "Enter" to confirm.
3. Enter new password (4 digits in length) by using the arrow buttons on the remote, then press "Enter" to confirm.
4. Enter new password again and press “Enter” to confirm.
   - If the incorrect password is entered 3 times, the projector will automatically shut down.
   - If you have forgotten your password, please contact your local office for support.

Note

- ***Password default value is “1234” (first time).***

Projector ID

ID definition can be set up by menu (range 0~99), and allow user control an individual projector by RS232.

Audio Settings

Internal Speaker

Use the internal speaker of projector.

Mute

Cut off the sound temporarily.

Volume

Adjust the volume level for Audio or Mic input source.

Audio Input

Select audio input sources.

Advanced

Logo

Use this function to set the desired startup screen. If changes are made they will take effect the next time the projector is powered on.

- Default: The default startup screen.
- Neutral: Neutral startup screen.
- User: "User" is the screen that you captured.

Logo Capture

Capture the current projection screen as a start up screen.

Closed Captioning

Use this function to set the desired startup screen. If changes are made they will take effect the next time the projector is powered on.

- Off: select “Off” to turn off the closed captioning feature.
- CC1:CC1 language: American English.
- CC2:CC2 language (depending on the TV channel of the user):Spanish, French, Portuguese, German, Danish.

OPTIONS

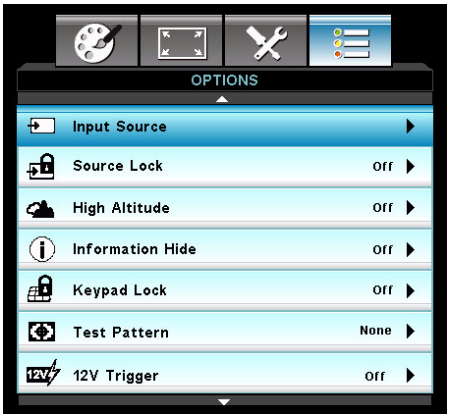

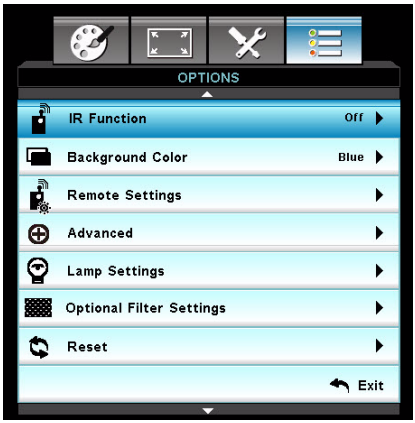

Input Source

Use this option to enable / disable input sources. Press ◀ / ▶ /“Enter” key to enter the sub menu and select which sources you require. Press “Enter” to finalize the selection. The projector will not search for inputs that are not selected.

Source Lock

- On: The projector will only search current input connection.
- Off: The projector will search for other signals if the current input signal is lost.

High Altitude

When “On” is selected, the fans will spin faster. This feature is useful in high altitude areas where the air is thin.

Information Hide

- On: Choose “On” to hide the info message.
- Off: Choose “Off” to show the “searching” message.

Keypad Lock

When the keypad lock function is “On”, the control panel will be locked however, the projector can be operated by the remote control. By selecting “Off”, you will be able to reuse the control panel.

Note

- ***To turn off the keypad lock, press and hold “Enter” key on top of the projector for 5 seconds.***

Test Pattern

Display a test pattern. There are Grid, White pattern and None.

12V Trigger

Choose the setting from On / Off to Auto 3D to set 12V Trigger.

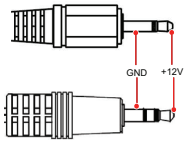

Note

- ***12V Trigger A Relay Connector support 12V, 250mA. 3.5mm Mini Jack.***

IR Function

Choose the setting from On / Front / Back to Off and then choose "Yes" to apply the selection.

Background Color

Use this feature to display a “Black”, “Red”, “Blue”, “Green” or “White”, screen when no signal is available.

Remote Settings

Allow user to define a short cut key on the remote control, and the function item is selected in OSD menu.

Advanced

Direct Power On

Choose “On” to activate Direct Power mode. The projector will automatically power on when AC power is supplied, without pressing the “ ⏻ ” key on the projector control panel or on the remote control.

Signal Power On

If Signal Power On is activated, the projector will turn on automatically when VGA signal is detected.

Auto Power Off (min)

Sets the countdown timer interval. The countdown timer will start, when there is no signal being sent to the projector. The projector will automatically power off when the countdown has finished (in minutes).

Sleep Timer (min)

Sets the countdown timer interval. The countdown timer will start, with or without a signal being sent to the projector. The projector will automatically power off when the countdown has finished (in minutes).

Quick Resume

If the projector is accidentally turned off, this feature allows the projector to be instantly powered on again within 100 seconds of power down.

Power Mode (Standby)

Set whether the **VGA-OUT** function works when the projector is in standby (powered off but connected to AC power).

- Eco: The **VGA-OUT** and **AUDIO-OUT** functions will not work when the projector is in standby.
- Active: The **VGA-OUT** and **AUDIO-OUT** functions will work when the projector is in standby.

Note

- ***When Power mode (Standby) is set to Eco (<0.5W), the VGA output, Signal Power On, Audio pass-through will be deactivated when the projector is in standby.***

Lamp Settings

Lamp Hours

Display the projection time.

Lamp Reminder

Choose this function to show or to hide the warning message when the changing lamp message is displayed.

Lamp Mode

- Bright: Choose "Bright" to increase the brightness.
- Eco.: Choose "Eco." to dim the projector lamp which will lower power consumption and extend the lamp life.

Lamp Reset

Reset the lamp hour counter after replacing the lamp.

Optional Filter Settings

Optional Filter Installed

Choose “Yes” if an optional dust filter is installed.

Filter Usage Hours

Display the dust filter’s elapsed operating time (in hours).

Filter Reminder
Sets a filter reminder if timer is up.

Filter Reset
Reset the dust filter hour counter after replacing the dust filter.

Reset

Choose “Yes” to return the display parameters on all menus to the factory default settings.

Appendix

Replacing the Dust Filter

Be sure to follow the steps to replace the dust filter.

☞ **The dust filter should be cleaned or replaced periodically (suggest after every 500 hours or 3 months of use). If it is not cleaned periodically, it can become clogged with dust and prevent the projector from being ventilated properly. This can cause over heating and damage the projector. If the projector is used in a dusty environment, be sure to cleaned or replaced the dust filter more frequently.**

1. Remove the dust filter, located at the rear side of the projector, by pulling it out as the illustration.

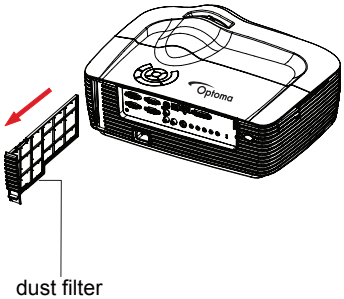

2. Clean the dust filter.
   - To clean the dust filter, you are advised to use a small vacuum cleaner designed for computers and other office equipment.
   - If the dust filter is torn, replace it.
3. **Turn on the projector, then press “Menu”, go to OPTIONS > Optional Filter > Optional Filter Installed and select “Yes”.**
4. Turn on the projector, then press “Menu”, go to OPTIONS > Optional Filter > Optional Filter Installed and select “No” when you pull out the dust filter and would not use it again.

Replacing the Lamp

As the projector operates over time, the brightness of the projector lamp gradually decreases and the lamp becomes more susceptible to breakage. We recommend replacing the lamp if a warning message is displayed. Do not attempt to replace the lamp yourself. Contact the qualified service personnel for replacement.

Note

- ***The lamp is extremely hot right after turning off the projector. If you touch the lamp, you may scald your finger. When you replace the lamp, wait for at least 45 minutes for the lamp to cool down.***
- ***Do not touch the lamp glass at any time. The lamp may explode due to improper handling, including the touching of the lamp glass.***
- ***Lamp lifetime may differ from lamp to lamp and according to the environment of use. There is no guarantee of the same lifetime for each lamp. Some lamps may fail or terminate their lifetime in a shorter period of time than other similar lamps.***
- ***A lamp may explode as a result of vibration, shock or degradation as a result of hours of use as its lifetime draws to an end. Risk of explosion may differ according to the environment or conditions in which the projector and lamp are being used.***
- ***Wear protective gloves and eyeglasses when fixing or detaching the lamp.***
- ***Faster on-off-cycles will damage the lamp and reduce lamp life. Wait at least for 5 minutes to turn off the projector after powering on.***
- ***Do not operate the lamp in proximity to paper, cloth, or other combustible material nor cover it with such materials.***
- ***Do not operate the lamp in an atmosphere containing an inflammable substance, such as thinner.***
- ***Thoroughly ventilate the area or the room when operating the lamp in an oxygen atmosphere (in the air). If ozone is inhaled, it could cause headaches, nausea, dizziness, and other symptoms.***
- ***The inorganic mercury is involved in the lamp. If the lamp bursts, the mercury inside the lamp will be exposed. Leave the area immediately if the lamp shatters while being operated and ventilate the area for at least 30 minutes in order to avoid the inhalation of mercury fumes. Otherwise it could be harmful to user's health.***

1. Turn off the projector.
2. Unplug the power cord.
3. Open the top cover, by sliding the top cover forward, and lifting the top cover off.1
4. Remove the screw on the lamp cover and then open it up. 2 & 3
5. Loosen the screws from the lamp module. 4
6. Raise the handle and pull out the lamp module slowly and carefully. 5
7. Insert the new lamp module into the projector and tighten the screws.
8. Replace the lamp cover and tighten the screw.
9. Replace the top cover by (a) aligning the cover (b) sliding it toward the back and (c) locking it back into place.
10. Turn on the projector. If the lamp does not turn on after the warm-up period, try reinstalling the lamp.
11. Reset the lamp hour. Refer to the "**OPTIONS > Lamp Settings**" menu.

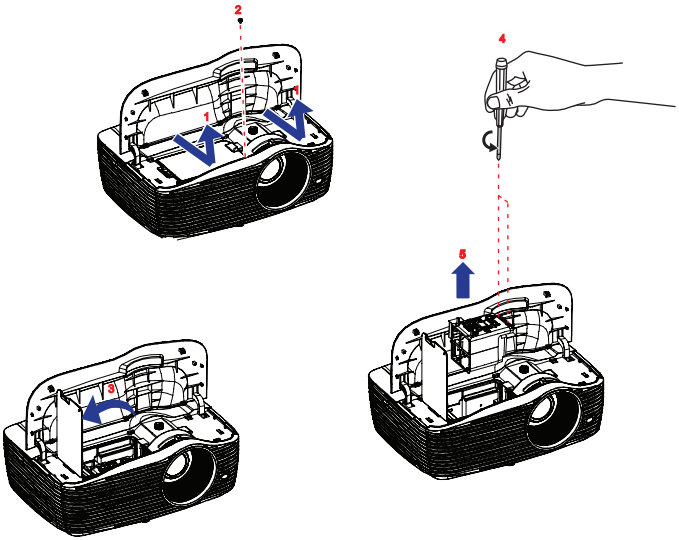

Note

- ***Dispose the used lamp according to local regulations.***
- ***Ensure that screws are tightened properly. Screws not tightened fully may result in injury or accidents.***
- ***Since the lamp is made of glass, do not drop the unit and do not scratch the glass.***
- ***Do not reuse the old lamp. This could cause the lamp to explode.***
- ***Be sure to turn off the projector and unplug the AC power cord before replacing the lamp.***
- ***Do not use the projector with the lamp cover removed.***

Ceiling mount installation

1. To prevent damage to your projector, please use the Optoma ceiling mount.
2. If you wish to use a third party ceiling mount kit, please ensure the screws used to attach a mount to the projector meet the following specifications:

- Screw type: M4*3
- Maximum screw length: 10mm
- Minimum screw length: 8mm

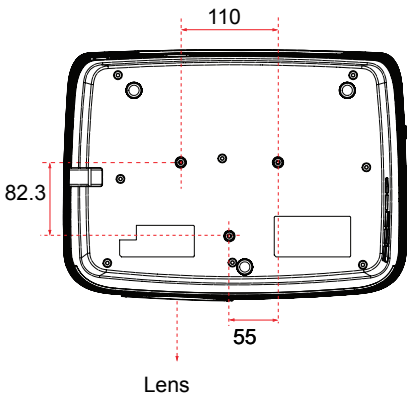

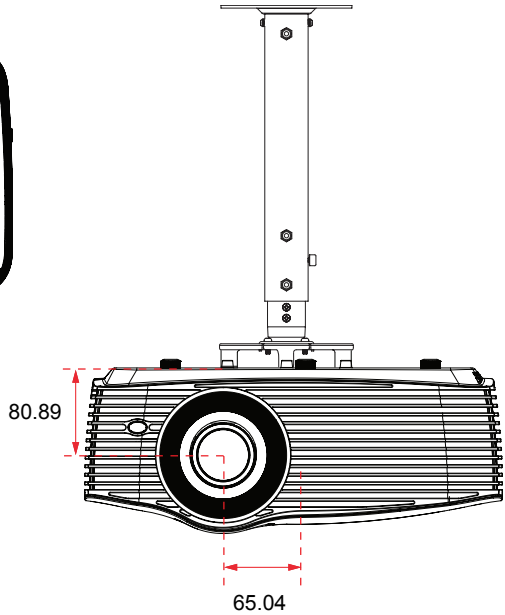

Unit: mm

Note

- ***Please note that damage resulting from incorrect installation will void the warranty.***

Warning

1.If you buy a ceiling mount from another company, please be sure to use the correct screw size. Screw length will vary depending on the thickness of the mounting plate.

2.Be sure to keep at least 10 cm gap between the ceiling and the bottom of the projector.

3.Avoid installing the projector near a heat source.

Compatibility Modes

Computer Compatibility

Signal	Resolution	Refresh Rate(Hz)	Notes for Mac
VGA	640 X 480	60/67/72/85	Mac 60/72/85
SVGA	800 X 600	60(**)/72/85/120(**)	Mac 60/72/85
XGA	1024 X768	60(**)/70/75/85/ 120(**)	Mac 60/70/75/85
HDTV(720P)	1280 X 720	50/60(**)/120(**)	Mac 60
WXGA	1280 X768	60/75/85	Mac 60/75/85
	1280 X800	60(**)/120(**)	Mac 60
	1366 X 768	60	Mac 60
WXGA+	1440 X 900	60	Mac 60
SXGA	1280 X1024	60	Mac 60/75
SXGA+	1400 X1050	60	
UXGA	1600 X 1200	60	
HDTV(1080p)	1920 X1080	60	Mac 60
WUXGA	1920 X1200(*)	60	Mac 60

(*)1920 x 1200 @60hz only support reduced blanking
(**) 3D timing for True 3D projector

Input Signal for HDMI

Signal	Resolution	Refresh Rate(Hz)	Notes for Mac
VGA	640 X 480	60	Mac 60/72/85
SVGA	800 X 600	60(**)/72/85/120(**)	Mac 60/72/85
XGA	1024 X 768	60(**)/70/75/85/ 120(**)	Mac 60/70/75/85
SDTV(480I)	640 X 480	60	
SDTV(480P)	640 X 480	60	
SDTV(576I)	720 X 576	50	
SDTV(576P)	720 X 576	50	
WSVGA(1024X600)	1024 X 600	60	
HDTV(720p)	1280 X 720	50(**)/60/120(**)	Mac 60
WXGA	1280 X768	60/75/85	Mac 75
	1280 X800	60(**)/120(**)	Mac 60
	1366 x 768	60	Mac 60
WXGA+	1440 x 900	60	Mac 60
SXGA	1280 X1024	60/75/85	Mac 60/75
SXGA+	1400 X1050	60	
UXGA	1600 X 1200	60	
HDTV(1080I)	1920 X1080	50/60	
HDTV(1080p)	1920 X1080	24/30/50/60	Mac 60
WUXGA	1920 X1200(*)	60	Mac 60

(*)1920 x 1200 @60hz only support reduced blanking
(**)3D timing for True 3D projector

True 3D Video Compatibility table

Input Resolutions	HDMI 1.4a 3D Input	Input timing		
		1280 X 720P @ 50Hz	Top - and - Bottom	
		1280 X 720P @ 60Hz	Top - and - Bottom	
		1280 X 720P @ 50Hz	Frame packing	
		1280 X 720P @ 60Hz	Frame packing	
		1920 X 1080i @50 Hz	Side- by-Side (Half)	
		1920 X 1080i @60 Hz	Side- by-Side (Half)	
		1920 X 1080P @24 Hz	Top - and - Bottom	
		1920 X 1080P @24 Hz	Frame packing	
	HDMI 1.3	1920 x 1080i @ 50Hz 1920 x1080i @ 60Hz 1280 x 720P @ 50Hz 1280 x 720P @60Hz	Side-by-Side(Half)	SBS mode is on
		1920 x 1080i @ 50Hz 1920 x1080i @ 60Hz 1280 x 720P @ 50Hz 1280 x 720P @60Hz	Top-and-Bottom	TAB mode is on
		480i	HQFS	3D format is Frame sequential

- ***If 3D input is 1080p@24hz, the DMD should replay with integral multiple with 3D mode***
- ***Support NVIDIA 3DTV Play if there is no patent fee from Optoma***
- ***1080i@25hz and 720p@50hz will run in 100hz; other 3D timing will run in 120hz.***
- ***1080P@24hz will run 144Hz.***

Video Compatibility

NTSC	NTSC M/J, 3.58MHz, 4.43MHz
PAL	PAL B/D/G/H/I/M/N, 4.43MHz
SECAM	SECAM B/D/G/K/K1/L, 4.25/4.4 MHz
SDTV	480i/p, 576i/p
HDTV	720p(50/60Hz), 1080i(50/60Hz), 1080P(50/60Hz)

IR Code

Key Legend	Key position	NEC format	Customer code		Key code	
			Byte 1	Byte 2	Byte 3	Byte 4
ON (Power)	1	Format 1	32	CD	02	FD
--	2	--	--	--	--	--
--	3	--	--	--	--	--
OFF(Power)	4	Format 1	32	CD	2E	D1
User1	5	Format 1	32	CD	36	C9
User2	6	Format 1	32	CD	65	9A
User3	7	Format 1	32	CD	66	99
Brightness	8	Format 1	32	CD	41	BE
Contrast	9	Format 1	32	CD	42	BD
Mode	10	Format 1	32	CD	05	FA
Keystone	11	Format 1	32	CD	07	F8
Aspect ratio	12	Format 1	32	CD	64	9B
3D	13	Format 1	32	CD	89	76
Mute	14	Format 1	32	CD	52	AD
DB	15	Format 1	32	CD	44	BB
Sleep Timer	16	Format 1	32	CD	63	9C
Vol + ▲	17	**Format 2**	**32**	**CD**	**11**	**EE**
Source ◀	18	**Format 2**	**32**	**CD**	**10**	**EF**
ENTER	19	Format 1	32	CD	0F	F0
Re-sync ▶	20	**Format 2**	**32**	**CD**	**12**	**ED**
Vol -▼	21	**Format 2**	**32**	**CD**	**14**	**EB**
Menu	22	Format 1	32	CD	0E	F1
--	23	--	--	--	--	--
--	24	--	--	--	--	--
--	25	--	--	--	--	--
HDMI1	26	Format 1	32	CD	16	E9
HDMI2	27	Format 1	32	CD	30	CF
--	28	--	--	--	--	--
VGA1	29	Format 1	32	CD	1B	E4
VGA2	30	Format 1	32	CD	1E	E1
Video	31	Format 1	32	CD	1C	E3
YPbPr	32	Format 1	32	CD	17	E8

Note

- ***When AV Mute is pressed, the power consumption of lamp should become 30% if projector supports Dynamic Eco / Image Care.***
- ***HDMI1 button should switch HDMI and DVI-D input source; Video button should switch Composite and S-Video input source.***
- ***Since HD36 doesn't have HDMI2 and YPbPr; HDMI2 button will be no function and YPbPr button will be no function.***
- ***Please see OSD for User1/User2/User3 definition.***
- ***Security password should be set through arrows/enter button to choose number key in OSD menu.***

RS232 Commands and Protocol Function List

RS232 Pin Assignments

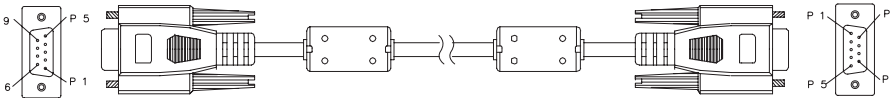

D-Sub 9 pin

(from the projector side)

1	1 CD
2	RXD
3	TXD
4	DTR
5	GND
6	DSR
7	RTS
8	CTS
9	RI

(from the cable side)

C1	COLOR	C2
1	Black	1
2	Brown	3
3	Red	2
4	Orange	6
5	Yellow	5
6	Green	4
7	Blue	8
8	Purple	7
9	White	9
SHELL	DW	SHELL

RS232 Protocol Function List

Baud Rate	9600
Data Bits	8
Parity	None
Stop Bits	1
Flow Control	None
UART16550 FIFO	Disable
Projector Return (Pass)	P
Projector Return (Fail)	F

Lead Code	Projector ID		Command ID			space	variable	carriage return
~	X	X	X	X	X		n	CR
Fix code One Digit	Set in OSD 00~99 Two Digit		Defined by Optoma 2 or 3 Digit See the Follow content			One Digit	Per item Definition	Fix code One digit

Note

- ***To also include AMX beacon signal in RS232 protocol***
- ***In basic terms, AMX controllers will issue a poll periodically to detect 3rd party devices connected to the RS232 port (in this case Optoma). The poll is "AMX" in ASCII followed by a carriage return 'r'.***
- ***There is a <CR> after all ASCII commands.***
- ***0D is the HEX code for <CR> in ASCII code***

SEND to projector

232 ASCII Code	HEX Code	Function	Description
~XX00 1	7E 30 30 30 30 20 31 0D	Power ON	
~XX00 0	7E 30 30 30 30 20 30 0D	Power OFF	(0/2 for backward compatible)
~XX00 1 ~nnnn	7E 30 30 30 30 20 31 20 a 0D	Power ON with Password	~nnnn = ~0000 (a=7E 30 30 30 30) ~9999 (a=7E 39 39 39 39)
~XX01 1	7E 30 30 30 31 20 31 0D	Resync	
~XX02 1	7E 30 30 30 32 20 31 0D	AV Mute	On
~XX02 0	7E 30 30 30 32 20 30 0D		Off (0/2 for backward compatible)
~XX03 1	7E 30 30 30 33 20 31 0D	Mute	On
~XX03 0	7E 30 30 30 33 20 30 0D		Off (0/2 for backward compatible)
~XX04 1	7E 30 30 30 34 20 31 0D	Freeze	
~XX04 0	7E 30 30 30 34 20 30 0D	Unfreeze	(0/2 for backward compatible)
~XX05 1	7E 30 30 30 35 20 31 0D	Zoom Plus	
~XX06 1	7E 30 30 30 36 20 31 0D	Zoom Minus	
~XX12 1	7E 30 30 31 32 20 31 0D	Direct Source Commands	HDMI
~XX12 3	7E 30 30 31 32 20 33 0D		DVI-I
~XX12 5	7E 30 30 31 32 20 35 0D		VGA1
~XX12 6	7E 30 30 31 32 20 36 0D		VGA 2
~XX12 8	7E 30 30 31 32 20 38 0D		VGA1 Component
~XX12 9	7E 30 30 31 32 20 39 0D		S-Video
~XX12 10	7E 30 30 31 32 20 31 30 0D		Video
~XX12 13	7E 30 30 31 32 20 31 33 0D		VGA 2 Component
~XX20 1	7E 30 30 32 30 20 31 0D	Display Mode	Cinema
~XX20 4	7E 30 30 32 30 20 34 0D		Reference
~XX20 3	7E 30 30 32 30 20 33 0D		Vivid
~XX20 2	7E 30 30 32 30 20 32 0D		Bright
~XX20 9	7E 30 30 32 30 20 39 0D		3D
~XX20 10	7E 30 30 32 30 20 31 30 0D		Game
~XX20 5	7E 30 30 32 30 20 35 0D		User
~XX20 14	7E 30 30 32 30 20 31 34 0D		ISF Day
~XX20 15	7E 30 30 32 30 20 31 35 0D		ISF Night
~XX21 n	7E 30 30 32 31 20 a 0D	Brightness	n = -50 (a=2D 35 30) ~ 50 (a=35 30)
~XX22 n	7E 30 30 32 32 20 a 0D	Contrast	n = -50 (a=2D 35 30) ~ 50 (a=35 30)
~XX23 n	7E 30 30 32 33 20 a 0D	Sharpness	n = 1 (a=31) ~ 15 (a=31 35)
~XX24 n	7E 30 30 32 34 20 a 0D	Color Settings/White	Red n = -50 (a=2D 35 30) ~ 50 (a=35 30)
~XX25 n	7E 30 30 32 35 20 a 0D		Green n = -50 (a=2D 35 30) ~ 50 (a=35 30)
~XX26 n	7E 30 30 32 36 20 a 0D		Blue n = -50 (a=2D 35 30) ~ 50 (a=35 30)
~XX33 1	7E 30 30 33 33 20 31 0D		Reset
~XX34 n	7E 30 30 33 34 20 a 0D	BrilliantColor™	n = 1 (a=31) ~ 10 (a=31 30)
~XX191 0	7E 30 30 31 39 31 20 30 0D	DynamicBlack	Off
~XX191 1	7E 30 30 31 39 31 20 31 0D		On
~XX196 n	7E 30 30 31 39 36 20 a 0D	Noise Reduction	n= 0 (a=30) ~10 (a=31 30)
~XX35 1	7E 30 30 33 35 20 31 0D	Gamma	Film
~XX35 2	7E 30 30 33 35 20 32 0D		Video
~XX35 3	7E 30 30 33 35 20 33 0D		Graphics
~XX35 4	7E 30 30 33 35 20 34 0D		2.2
~XX35 5	7E 30 30 33 35 20 35 0D		1.8
~XX35 6	7E 30 30 33 35 20 36 0D		2.0
~XX35 7	7E 30 30 33 35 20 37 0D		2.6
~XX36 4	7E 30 30 33 36 20 34 0D		Warm(D55)
~XX36 1	7E 30 30 33 36 20 31 0D	Color Temp.	Standard(D65)
~XX36 2	7E 30 30 33 36 20 32 0D		Cool(D75)
~XX36 3	7E 30 30 33 36 20 33 0D		Cold(D83)
~XX37 1	7E 30 30 33 37 20 31 0D	Color Space	Auto
~XX37 2	7E 30 30 33 37 20 32 0D		RGB\ RGB(0-255)
~XX37 3	7E 30 30 33 37 20 33 0D		YUV
~XX37 4	7E 30 30 33 37 20 34 0D		RGB(16 - 235)
~XX73 n	7E 30 30 37 33 20 a 0D	Signal	Frequency n = -5 (a=2D 35) ~ 5 (a=35) By signal
~XX91 1	7E 30 30 39 31 20 31 0D		Automatic On
~XX91 0	7E 30 30 39 31 20 30 0D		Off
~XX74 n	7E 30 30 37 34 20 a 0D		Phase n = 0 (a=30) ~ 31 (a=33 31) By signal
~XX75 n	7E 30 30 37 35 20 a 0D		H. Position n = -5 (a=2D 35) ~ 5 (a=35) By timing
~XX76 n	7E 30 30 37 36 20 a 0D		V. Position n = -5 (a=2D 35) ~ 5 (a=35) By timing
~XX45 n	7E 30 30 34 34 20 a 0D	Color (Saturation)	n = -50 (a=2D 35 30) ~ 50 (a=35 30)
~XX44 n	7E 30 30 34 35 20 a 0D	Tint	n = -50 (a=2D 35 30) ~ 50 (a=35 30))
~XX60 1	7E 30 30 36 30 20 31 0D	Format	4:3
~XX60 2	7E 30 30 36 30 20 32 0D		16:9
~XX60 5	7E 30 30 36 30 20 35 0D		LBX
~XX60 6	7E 30 30 36 30 20 36 0D		Native
~XX60 7	7E 30 30 36 30 20 37 0D		Auto
~XX60 9	7E 30 30 36 30 20 39 0D		Superwide
~XX61 n	7E 30 30 36 31 20 a 0D	Edge mask	n = 0 (a=30) ~ 10 (a=31 30)
~XX62 n	7E 30 30 36 32 20 a 0D	Zoom	n = -5 (a=2D 35) ~ 25 (a=32 35)
~XX63 n	7E 30 30 36 33 20 a 0D	H Image Shift	n = -100 (a=2D 31 30 30) ~ 100 (a=31 30 30)
~XX64 n	7E 30 30 36 34 20 a 0D	V Image Shift	n = -100 (a=2D 31 30 30) ~ 100 (a=31 30 30)
~XX66 n	7E 30 30 36 36 20 a 0D	V Keystone	n = -40 (a=2D 34 30) ~ 40 (a=34 30)
~XX69 1	7E 30 30 36 39 20 31 0D	Auto Keystone	On

~XX69 0	7E 30 30 36 39 20 30 0D	Auto Keystone	Off
~XX230 0	7E 30 30 32 33 30 20 30 0D	3D Mode	Off
~XX230 1	7E 30 30 32 33 30 20 31 0D	3D Mode	DLP-Link
~XX230 2	7E 30 30 32 33 30 20 32 0D	3D Mode	VESA 3D
~XX400 0	7E 30 30 34 30 30 20 30 0D	3D→2D	3D
~XX400 1	7E 30 30 34 30 30 20 31 0D		L
~XX400 2	7E 30 30 34 30 30 20 32 0D		R
~XX405 0	7E 30 30 34 30 35 20 30 0D	3D Format	Auto
~XX405 1	7E 30 30 34 30 35 20 31 0D		SBS
~XX405 2	7E 30 30 34 30 35 20 32 0D		Top and Bottom
~XX405 3	7E 30 30 34 30 35 20 33 0D		Frame sequential
~XX231 0	7E 30 30 32 33 31 20 30 0D	3D Sync Invert	On
~XX231 1	7E 30 30 32 33 31 20 31 0D	3D Sync Invert	Off

~XX70 1	7E 30 30 37 30 20 31 0D	Language	English
~XX70 2	7E 30 30 37 30 20 32 0D		German
~XX70 3	7E 30 30 37 30 20 33 0D		French
~XX70 4	7E 30 30 37 30 20 34 0D		Italian
~XX70 5	7E 30 30 37 30 20 35 0D		Spanish
~XX70 6	7E 30 30 37 30 20 36 0D		Portuguese
~XX70 7	7E 30 30 37 30 20 37 0D		Polish
~XX70 8	7E 30 30 37 30 20 38 0D		Dutch
~XX70 9	7E 30 30 37 30 20 39 0D		Swedish
~XX70 10	7E 30 30 37 30 20 31 30 0D		Norwegian/Danish
~XX70 11	7E 30 30 37 30 20 31 31 0D		Finnish
~XX70 12	7E 30 30 37 30 20 31 32 0D		Greek
~XX70 13	7E 30 30 37 30 20 31 33 0D		Traditional Chinese
~XX70 14	7E 30 30 37 30 20 31 34 0D		Simplified Chinese
~XX70 15	7E 30 30 37 30 20 31 35 0D		Japanese
~XX70 16	7E 30 30 37 30 20 31 36 0D		Korean
~XX70 17	7E 30 30 37 30 20 31 37 0D		Russian
~XX70 18	7E 30 30 37 30 20 31 38 0D		Hungarian
~XX70 19	7E 30 30 37 30 20 31 39 0D		Czechoslovak
~XX70 20	7E 30 30 37 30 20 32 30 0D		Arabic
~XX70 21	7E 30 30 37 30 20 32 31 0D		Thai
~XX70 22	7E 30 30 37 30 20 32 32 0D		Turkish
~XX70 23	7E 30 30 37 30 20 32 33 0D		Farsi
~XX70 25	7E 30 30 37 30 20 32 33 0D		Vietnamese
~XX70 26	7E 30 30 37 30 20 32 33 0D		Indonesian
~XX70 27	7E 30 30 37 30 20 32 33 0D		Romanian

~XX71 1	7E 30 30 37 31 20 31 0D	Projection	Front-Desktop
~XX71 2	7E 30 30 37 31 20 32 0D		Rear-Desktop
~XX71 3	7E 30 30 37 31 20 33 0D		Front-Ceiling
~XX71 4	7E 30 30 37 31 20 34 0D		Rear-Ceiling

~XX72 1	7E 30 30 37 32 20 31 0D	Menu Location	Top Left
~XX72 2	7E 30 30 37 32 20 32 0D		Top Right
~XX72 3	7E 30 30 37 32 20 33 0D		Centre
~XX72 4	7E 30 30 37 32 20 34 0D		Bottom Left
~XX72 5	7E 30 30 37 32 20 35 0D		Bottom Right

~XX77 n	7E 30 30 37 37 20 aabbcc 0D	Security	Security Timer	Month/Day/Hour n = mm/dd/hhmm= 00 (aa=30 30) ~ 12 (aa=31 32) dd = 00 (bb=30 30) ~ 30 (bb=33 30) hh= 00 (cc=30 30) ~ 24 (cc=32 34)
~XX78 1	7E 30 30 37 38 20 31 0D		Security Settings	Enable
~XX78 0 ~nnnn	7E 30 30 37 38 20 32 20 a 0D (a=7E 30 30 30 30)			Disable(0/2 for backward compatible) ~nnnn = ~0000 ~9999 (a=7E 39 39 39 39)

~XX79 n	7E 30 30 37 39 20 a 0D	Projector ID	n = 00 (a=30 30) ~ 99 (a=39 39)

~XX80 1	7E 30 30 38 30 20 31 0D	Mute	On
~XX80 0	7E 30 30 38 30 20 30 0D		Off (0/2 for backward compatible)
~XX310 0	7E 30 33 31 30 20 30 0D	Internal Speaker	Off
~XX310 1	7E 30 33 31 30 20 31 0D		On
~XX81 n	7E 30 30 38 31 20 a 0D	Volume(Audio)	n = 0 (a=30) ~ 10 (a=31 30)
~XX93 n	7E 30 30 39 33 20 a 0D	Volume(Mic)	n = 0 (a=30) ~ 10 (a=31 30)
~XX89 0	7E 30 30 38 39 20 30 0D	Audio Input	Default
~XX89 1	7E 30 30 38 39 20 31 0D		Audio1
~XX89 3	7E 30 30 38 39 20 33 0D		Audio2
~XX89 4	7E 30 30 38 39 20 34 0D		Audio3

~XX82 1	7E 30 30 38 32 20 31 0D	Logo	Default
~XX82 2	7E 30 30 38 32 20 32 0D		User
~XX82 3	7E 30 30 38 32 20 33 0D		Neutral
~XX83 1	7E 30 30 38 33 20 31 0D	Logo Capture	
~XX88 0	7E 30 30 38 38 20 30 0D	Closed Captioning	Off
~XX88 1	7E 30 30 38 38 20 31 0D		cc1
~XX88 2	7E 30 30 38 38 20 32 0D		cc2

~XX100 1	7E 30 30 31 30 30 20 31 0D	Source Lock	On
~XX100 0	7E 30 30 31 30 30 20 30 0D		Off (0/2 for backward compatible)
~XX101 1	7E 30 30 31 30 31 20 31 0D	High Altitude	On
~XX101 0	7E 30 30 31 30 31 20 30 0D		Off (0/2 for backward compatible)
~XX102 1	7E 30 30 31 30 32 20 31 0D	Information Hide	On
~XX102 0	7E 30 30 31 30 32 20 30 0D		Off (0/2 for backward compatible)
~XX103 1	7E 30 30 31 30 33 20 31 0D	Keypad Lock	On
~XX103 0	7E 30 30 31 30 33 20 30 0D		Off (0/2 for backward compatible)

~XX195 0	7E 30 30 31 39 35 20 30 0D	Test Pattern	None
~XX195 1	7E 30 30 31 39 35 20 31 0D		Grid
~XX195 2	7E 30 30 31 39 35 20 32 0D		White Pattern
~XX192 0	7E 30 30 31 39 32 20 30 0D	12V Trigger	Off
~XX192 1	7E 30 30 31 39 32 20 31 0D		On
~XX192 3	7E 30 30 31 39 32 20 33 0D		Auto 3D
~XX11 0	7E 30 30 31 31 20 30 0D	IR Function	Off
~XX11 1	7E 30 30 31 31 20 31 0D		On
~XX11 2	7E 30 30 31 31 20 32 0D		Front
~XX11 3	7E 30 30 31 31 20 33 0D		Back

~XX104 1	7E 30 30 31 30 34 20 31 0D	Background Color	Blue
~XX104 2	7E 30 30 31 30 34 20 32 0D		Black
~XX104 3	7E 30 30 31 30 34 20 33 0D		Red
~XX104 4	7E 30 30 31 30 34 20 34 0D		Green
~XX104 5	7E 30 30 31 30 34 20 35 0D		White
~XX117 1	7E 30 30 31 31 37 20 31 0D	Remote Settings/User1	DVI-D
~XX117 2	7E 30 30 31 31 37 20 32 0D		S-VIDEO
~XX117 3	7E 30 30 31 31 37 20 33 0D		Color Settings
~XX117 4	7E 30 30 31 31 37 20 34 0D		Color Temp.
~XX117 5	7E 30 30 31 31 37 20 35 0D		Gamma
~XX117 6	7E 30 30 31 31 37 20 36 0D		Test Plan
~XX118 7	7E 30 30 31 31 37 20 37 0D		AV Mute
~XX118 1	7E 30 30 31 31 38 20 31 0D	Remote Settings/User2	DVI-D
~XX118 2	7E 30 30 31 31 38 20 32 0D		S-VIDEO
~XX118 3	7E 30 30 31 31 38 20 33 0D		Color Settings
~XX118 4	7E 30 30 31 31 38 20 34 0D		Color Temp.
~XX118 5	7E 30 30 31 31 38 20 35 0D		Gamma
~XX118 6	7E 30 30 31 31 38 20 36 0D		Test Plan
~XX118 7	7E 30 30 31 31 38 20 37 0D		AV Mute
~XX119 1	7E 30 30 31 31 39 20 31 0D	Remote Settings/User3	DVI-D
~XX119 2	7E 30 30 31 31 39 20 32 0D		S-VIDEO
~XX119 3	7E 30 30 31 31 39 20 33 0D		Color Settings
~XX119 4	7E 30 30 31 31 39 20 34 0D		Color Temp.
~XX119 5	7E 30 30 31 31 39 20 35 0D		Gamma
~XX119 6	7E 30 30 31 31 39 20 36 0D		Test Plan
~XX119 7	7E 30 30 31 31 39 20 37 0D		AV Mute

~XX105 1	7E 30 30 31 30 35 20 31 0D	Advanced	Direct Power On	On
~XX105 0	7E 30 30 31 30 35 20 30 0D		Off (0/2 for backward compatible)	
~XX113 0	7E 30 30 31 31 33 20 30 0D		Signal Power On	Off
~XX113 1	7E 30 30 31 31 33 20 31 0D			On
~XX106 n	7E 30 30 31 30 36 20 a 0D		Auto Power Off (min)	n = 0 (a=30) ~ 180 (a=31 38 30)
(5 minutes for each step).				
~XX107 n	7E 30 30 31 30 37 20 a 0D		Sleep Timer (min)	n = 0 (a=30) ~ 990 (a=39 39 30)
(30 minutes for each step).				
~XX115 1	7E 30 30 31 31 35 20 31 0D		Quick Resume	On
~XX115 0	7E 30 30 31 31 35 20 30 0D			Off (0/2 for backward compatible)
~XX114 1	7E 30 30 31 31 34 20 31 0D	Power Mode(Standby)	Eco.(<=0.5W)	
~XX114 0	7E 30 30 31 31 34 20 30 0D			Active (0/2 for backward compatible)

~XX109 1	7E 30 30 31 30 39 20 31 0D	Lamp Reminder	On
~XX109 0	7E 30 30 31 30 39 20 30 0D		Off (0/2 for backward compatible)
~XX110 1	7E 30 30 31 31 30 20 31 0D	Lamp Mode	Bright
~XX110 2	7E 30 30 31 31 30 20 32 0D		Eco
~XX111 1	7E 30 30 31 31 31 20 31 0D	Lamp Reset	Yes
~XX111 0	7E 30 30 31 31 31 20 30 0D		No (0/2 for backward compatible)

~XX320 1	7E 30 30 33 32 30 20 31 0D	Optional Filter Installed	Yes
~XX320 0	7E 30 30 33 32 30 20 30 0D		No (0/2 for backward compatible)
~XX322 0	7E 30 30 33 32 32 20 30 0D	Filter Reminder	Off
~XX322 1	7E 30 30 33 32 32 20 31 0D		300 hr
~XX322 2	7E 30 30 33 32 32 20 32 0D		500 hr
~XX322 3	7E 30 30 33 32 32 20 33 0D		800 hr
~XX322 4	7E 30 30 33 32 32 20 34 0D		1000 hr
~XX323 1	7E 30 30 33 32 33 20 31 0D	Filter Reset	Yes
~XX323 0	7E 30 30 33 32 33 20 30 0D		No(0/2 for backward compatible)

~XX112 1	7E 30 30 31 31 32 20 31 0D	Reset	Yes

~XX99 1	7E 30 30 39 39 20 31 0D	RS232 Alert Reset	Reset System Alert
~XX210 n	7E 30 30 32 30 30 20 n 0D	Display message on the OSD	n: 1-30 characters

---

SEND to emulate Remote

~XX140 10	7E 30 30 31 34 30 20 31 30 0D	Up
~XX140 11	7E 30 30 31 34 30 20 31 31 0D	Left
~XX140 12	7E 30 30 31 34 30 20 31 32 0D	Enter (for projection MENU)
~XX140 13	7E 30 30 31 34 30 20 31 33 0D	Right
~XX140 14	7E 30 30 31 34 30 20 31 34 0D	Down
~XX140 17	7E 30 30 31 34 30 20 31 37 0D	Volume –

~XX140 18	7E 30 30 31 34 30 20 31 38 0D	Volume +
~XX140 19	7E 30 30 31 34 30 20 31 39 0D	Brightness
~XX140 20	7E 30 30 31 34 30 20 32 30 0D	Menu
~XX140 47	7E 30 30 31 34 30 20 34 37 0D	Source

SEND from projector automatically

232 ASCII Code	HEX Code	Function	Projector Return	Description
		when Standby/Warming/Cooling/Out of Range/Lamp fail/Fan Lock/Over Temperature/ Lamp Hours Running Out/Cover Open	INFOn	n : 0/1/2/3/4/6/7/8/ = Standby/Warming/Cooling/Out of Range/Lamp fail/Fan Lock/Over Temperature/Lamp Hours Running Out/Cover Open

READ from projector

232 ASCII Code	HEX Code	Function	Projector Return	Description
~XX121 1	7E 30 30 31 32 31 20 31 0D	Input Source Commands	OKn	n: 0/1/2/3/4/5/6/ = None/VGA1/VGA2/Video/S-Video/HDMI/DVI/
~XX122 1	7E 30 30 31 32 32 20 31 0D	Sofware Version	OKdddd	dddd: FW version
~XX123 1	7E 30 30 31 32 33 20 31 0D	Display Mode	OKn	n : 0/1/2/3/4/5/6/7/8/9 = None/Cinema/Reference/Vivid/ Bright/Game/3D/User/ISF Day/ISF Night
~XX124 1	7E 30 30 31 32 34 20 31 0D	Power State	OKn	n : 0/1 = Off/On
~XX125 1	7E 30 30 31 32 35 20 31 0D	Brightness	OKn	
~XX126 1	7E 30 30 31 32 36 20 31 0D	Contrast	OKn	
~XX127 1	7E 30 30 31 32 37 20 31 0D	Format	OKn	n: 0/1/2/3/4/5 = 4:3/16:9/LBX/Native/AUTO/Superwide
~XX128 1	7E 30 30 31 32 38 20 31 0D	Color Temperature	OKn	n : 0/1/2/3 = Warm/Standard/Cool/Cold
~XX129 1	7E 30 30 31 32 39 20 31 0D	Projection Mode	OKn	n : 0/1/2/3 = Front-Desktop/ Rear-Desktop/ Front-Ceiling/ Rear-Ceiling
~XX150 1	7E 30 30 31 35 30 20 31 0D	Information	OKabbbbccddddde	a : 0/1 = Off/On bbbb: LampHour cc: source 00/01/02/03/04/05/06/07/08/09 = None/VGA1/VGA2/Video/S-Video/HDMI/DVI dddd: FW version e : Display mode 0/1/2/3/4/5/6/7/8/9= None/Cinema/Reference/Vivid/Bright/Game/3D/User/ISF Day/ISF Night
~XX151 1	7E 30 30 31 35 31 20 31 0D	Model name	OKn	n:1= VDHDSL
~XX108 1	7E 30 30 31 30 38 20 31 0D	Lamp Hours	OKbbbb	bbbb: LampHour
~XX108 2	7E 30 30 31 30 38 20 31 0D	Cumulative Lamp Hours	OKbbbbb	bbbbb: (5 digits) Total Lamp Hours
~XX321 1	7E 30 30 33 32 31 20 31 0D	Filter Usage Hours	OKbbbb	bbbb: Filter Usage Hours

Troubleshooting

Refer to the symptoms and measures listed below before sending the projector for repairs. If the problem persists, contact your local reseller or service center. Please refer to "LED Indicator Messages" as well.

Start-up

If no lights turn on:

- Be sure that the power cord is securely connected to the projector and the other end is plugged into an outlet with power.
- Press the power button again.
- Unplug the power cord and wait for a short while, then plug it in and press the power button again.

Image

If the searching source is displayed:

- Press **SOURCE** on the projector or **Source** on the remote control to select an active input source.
- Be sure the external source is turned on and connected.
- For a computer connection, ensure your notebook computer's external video port is turned on. Refer to the computer manual.

If the image is out of focus:

- While displaying the on-screen menu, adjust the focus ring. (The image size should not change; if it does, you are adjusting the zoom, not the focus.)
- Check the projection lens to see if it needs cleaning.

If the image is flickering or unstable for a computer connection:

- Press **"**Menu**"**, go to **IMAGE** > **Advanced** > **Signal** and adjust **Phase** or **Frequency.**

Remote control

If the remote control does not operate:

- Be sure nothing is blocking the remote control receiver on the front of the projector. Use the remote control within the effective range.
- Aim the remote control at the screen or at the front of the projector.
- Move the remote control so it is more directly in front of the projector and not as far to the side.

LED Indicator Messages

Message	Power LED (Red)	Power LED (Green)	Temp LED (Red)	Lamp LED (Red)
Standby State (Input power cord)	Steady light			
Power on (Warming)		Flashing 0.5 sec off 0.5 sec light		
Power on & Lamp lighting		Steady light		
Power off (Cooling)		Flashing 0.5 sec off 0.5 sec light Back to Red steady light when cooling fan turns off		
Quick Resume (100 secs)		Flashing 0.25 sec off 0.25 sec light		
Error (Lamp fail)	Flashing			Steady light
Error (Fan fail)	Flashing		Flashing	
Error (Over Temp)	Flashing		Steady light	
Standby State (Burn in mode)		Flashing		
Burnin (Warming)		Flashing		
Burnin (Cooling)		Flashing		

Optoma Global Offices

For service or support please contact your local office.

USA

3178 Laurelview Ct.
Fremont, CA 94538, USA
www.optomausa.com

☎ 888-289-6786
✉ services@optoma.com

Canada

3178 Laurelview Ct.
Fremont, CA 94538, USA
www.optomausa.com

☎ 888-289-6786
✉ services@optoma.com

Europe

42 Caxton Way, The Watford Business Park
Watford, Hertfordshire,
WD18 8QZ, UK
www.optoma.eu
Service Tel : +44 (0)1923 691865

☎ +44 (0) 1923 691 800
🖷 +44 (0) 1923 691 888
✉ service@tsc-europe.com

France

Batiment E
81-83 avenue Edouard Vaillant
92100 Boulogne Billancourt, France

☎ +33 1 41 46 12 20
🖷 +33 1 41 46 94 35
✉ savoptoma@optoma.fr

Spain

C/ Jose Hierro,36 Of. 1C
28522 Rivas VaciaMadrid,
Spain

☎ +34 91 499 06 06
🖷 +34 91 670 08 32

Deutschland

Wiesenstrasse 21 W
D40549 Dusseldorf,
Germany

☎ +49 (0) 211 506 6670
🖷 +49 (0) 211 506 66799
✉ info@optoma.de

Scandinavia

Lerpeveien 25
3040 Drammen
Norway
PO.BOX 9515
3038 Drammen
Norway

☎ +47 32 98 89 90
🖷 +47 32 98 89 99
✉ info@optoma.no

Latin America

3178 Laurelview Ct.
Fremont, CA 94538, USA
www.optoma.com.br

☎ 888-289-6786
www.optoma.com.mx

Korea

WOOMI TECH.CO.,LTD.
4F,Minu Bldg.33-14, Kangnam-Ku,
seoul,135-815, KOREA

☎ +82+2+34430004
🖷 +82+2+34430005

Japan

東京都足立区綾瀬 3-25-18
株式会社オーエス
コンタクトセンター：0120-380-495

✉ info@os-worldwide.com
www.os-worldwide.com

Taiwan

12F., No.213, Sec. 3, Beixin Rd.,
Xindian Dist., New Taipei City 231,
Taiwan, R.O.C.
www.optoma.com.tw

☎ +886-2-8911-8600
🖷 +886-2-8911-6550
✉ services@optoma.com.tw
asia.optoma.com

Hong Kong

Unit A, 27/F Dragon Centre,
79 Wing Hong Street,
Cheung Sha Wan,
Kowloon, Hong Kong

☎ +852-2396-8968
🖷 +852-2370-1222
www.optoma.com.hk

中国
上海市长宁区
凯旋路 1205 号 5 楼
琉璃奥图码

☎ +86-21-62947376
+86-21-62947375
www.optoma.com.cn

Regulation & Safety Notices

This appendix lists the general notices of your projector.

FCC Notice

This equipment has been tested and found to comply with the limits for a Class B digital device, pursuant to part 15 of the FCC Rules. These limits are designed to provide reasonable protection against harmful interference in residential installation. This equipment generates, uses and can radiate radio frequency energy and if not installed and used in accordance with the instructions, may cause harmful interference to radio communications.

However, there is no guarantee that interference will not occur in a particular installation. If this equipment does cause harmful interference to radio or television reception, detectable by turning the equipment in question off and on, the user is encouraged to try to correct the interference by one or more of the following measures:

- Reorient or relocate the receiving antenna
- Increase the distance between the equipment and the receiver
- Connect the equipment to an outlet on a different circuit than that which the receiver is connected to
- Or consult the dealer or an experienced radio/TV technician for help.

Notice: Shielded cables

All connections to other computing devices must be made using shielded cables to maintain compliance with FCC regulations.

Caution

Changes or modifications not expressly approved by the manufacturer could void the user’s authority, which is granted by the Federal Communications Commission, to operate this projector.

Operation conditions

This device complies with Part 15 of the FCC Rules. Operation is subject to the following two conditions:

1. This device may not cause harmful interference and
2. This device must accept any interference received, including interference that may cause undesired operation.

Notice: Canadian users

This Class B digital apparatus complies with Canadian ICES-003.

Remarque ą l'intention des utilisateurs canadiens

Cet appareil numerique de la classe B est conforme a la norme NMB-003 du Canada.

Declaration of Conformity for EU countries

- EMC Directive 2004/108/EC (including amendments)
- Low Voltage Directive 2006/95/EC
- R & TTE Directive 1999/5/EC (if product has RF function)

Disposal instructions

Do not throw this electronic device into the trash when discarding. To minimize pollution and ensure utmost protection of the global environment, please recycle it.