USA's primary source for projector lamps

myprojectorlamps

PROJECTOR OWNER'S MANUAL

Optoma

HD140X / HD142X / HD27

Need a replacement lamp for this projector?

www.myprojectorlamps.com

Original manufacturer manual, provided unmodified as a courtesy of MyProjectorLamps.com.
All trademarks belong to their respective owners.

Optoma

DLP® Projector

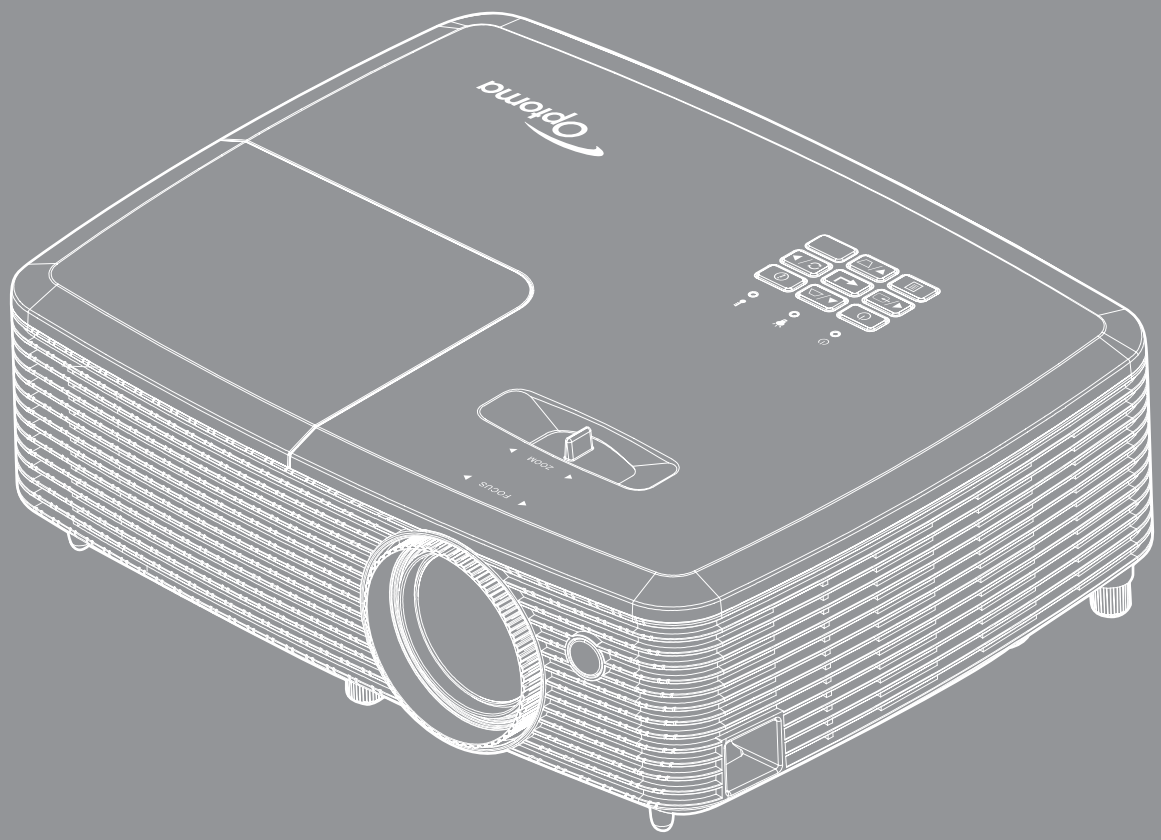

User manual

MHL™ HDMI™ HIGH DEFINITION MULTIMEDIA INTERFACE PICTURE BY DLP® TEXAS INSTRUMENTS

TABLE OF CONTENTS

SAFETY 4

Important Safety Instruction 4
3D Safety Information 5
Copyright 6
Disclaimer 6
Trademark Recognition 6
FCC 7
Declaration of Conformity for EU countries 7
WEEE 7

INTRODUCTION 8

Package Overview 8
Standard accessories 8
Optional accessories 8
Product Overview 9
Connections 10
Keypad 11
Remote control 12
Remote control 2 13

SETUP AND INSTALLATION 14

Installing the projector 14
Connecting sources to the projector 15
Adjusting the projector image 16
Remote setup 17

USING THE PROJECTOR 19

Powering on / off the projector 19
Selecting an input source 20

USING THE PROJECTOR 21

Menu navigation and features 21
OSD Menu tree 22
Display image settings menu 29
Display 3D menu 30
Display aspect ratio menu 31
Display edge mask menu 32
Display zoom menu 32
Display image shift menu 32
Display keystone menu 32
Audio mute menu 33
Audio volume menu 33

Setup projection menu 33
Setup lamp settings menu 33
Setup filter settings menu 33
Setup power settings menu 34
Setup security menu 34
Setup HDMI link settings menu 35
Setup test pattern menu 35
Setup remote settings menu 35
Setup 12V trigger menu 36
Setup options menu 36
Setup reset OSD menu 37
Setup reset to default menu 37
Info menu 37

MAINTENANCE 38

Replacing the lamp 38
Installing and cleaning the dust filter 40

ADDITIONAL INFORMATION 41

Compatible resolutions 41
Image size and projection distance 42
Projector dimensions and ceiling mount installation 44
IR remote codes 45
IR remote control 2 codes 47
Troubleshooting 49
Warning indicators 51
Specifications 53
Optoma global offices 54

SAFETY

	The lightning flash with arrow head within an equilateral triangle is intended to alert the user to the presence of uninsulated "dangerous voltage" within the product's enclosure that may be of sufficient magnitude to constitute a risk of electric shock to persons.
	The exclamation point within an equilateral triangle is intended to alert the user to the presence of important operating and maintenance (servicing) instructions in the literature accompanying the appliance.

Please follow all warnings, precautions and maintenance as recommended in this user's guide.

Important Safety Instruction

-

Do not stare into the beam, RG2.
As with any bright source, do not stare into the direct beam, RG2 IEC 62471-5:2015.
- Do not block any ventilation openings. To ensure reliable operation of the projector and to protect from over heating, it is recommended to install the projector in a location that does not block ventilation. As an example, do not place the projector on a crowded coffee table, sofa, bed, etc. Do not put the projector in an enclosure such as a book case or a cabinet that restricts air flow.
- To reduce the risk of fire and/or electric shock, do not expose the projector to rain or moisture. Do not install near heat sources such as radiators, heaters, stoves or any other apparatus such as amplifiers that emits heat.
- Do not let objects or liquids enter the projector. They may touch dangerous voltage points and short out parts that could result in fire or electric shock.
- Do not use under the following conditions:
  - In extremely hot, cold or humid environments.
    - (i) Ensure that the ambient room temperature is within 5°C ~ 40°C
    - (ii) Relative humidity is 10% ~ 85%
  - In areas susceptible to excessive dust and dirt.
  - Near any appliance generating a strong magnetic field.
  - In direct sunlight.
- Do not use the projector in places where flammable gases or explosives gases may be present in the atmosphere. The lamp inside the projector becomes very hot during operation and the gases may ignite and result in a fire.
- Do not use the unit if it has been physically damaged or abused. Physical damage/abuse would be (but not limited to):
  - Unit has been dropped.
  - Power supply cord or plug has been damaged.
  - Liquid has been spilled on to the projector.
  - Projector has been exposed to rain or moisture.
  - Something has fallen in the projector or something is loose inside.
- Do not place the projector on an unstable surface. The projector may fall over resulting in injury or the projector may become damaged.
- Do not block the light coming out of the projector lens when in operation. The light will heat the object and my melt, cause burns or start a fire.
- Please do not open or disassemble the projector as this may cause electric shock.

- Do not attempt to service the unit yourself. Opening or removing covers may expose you to dangerous voltages or other hazards. Please call Optoma before you send the unit for repair.
- See projector enclosure for safety related markings.
- The unit should only be repaired by appropriate service personnel.
- Only use attachments/accessories specified by the manufacturer.
- Do not look into straight into the projector lens during operation. The bright light may harm your eyes.
- When replacing the lamp, please allow the unit to cool down. Follow instructions as described on pages *38-39*.
- This projector will detect the life of the lamp itself. Please be sure to change the lamp when it shows warning messages.
- Reset the "Lamp Reset" function from the on-screen display "Setup lamp settings" menu after replacing the lamp module.
- When switching the projector off, please ensure the cooling cycle has been completed before disconnecting power. Allow 90 seconds for the projector to cool down.
- When the lamp is approaching to the end of its life time, the message "Lamp life exceeded." will show on the screen. Please contact your local reseller or service center to change the lamp as soon as possible.
- Turn off and unplug the power plug from the AC outlet before cleaning the product.
- Use a soft dry cloth with mild detergent to clean the display housing. Do not use abrasive cleaners, waxes or solvents to clean the unit.
- Disconnect the power plug from AC outlet if the product is not being used for a long period of time.

Note: *When the lamp reaches the end of its life, the projector will not turn back on until the lamp module has been replaced. To replace the lamp, follow the procedures listed under "Replacing the Lamp" section on pages 38-39.*

- *Do not setup the projector in places where it might be subjected to vibration or shock.*
- *Do not touch the lens with bare hands*
- *Remove battery/batteries from remote control before storage. If the battery/batteries are left in the remote for long periods, they may leak.*
- *Do not use or store the projector in places where smoke from oil or cigarettes may be present, as it can adversely affect the quality of the projector performance.*
- *Please follow the correct projector orientation installation as non standard installation may affect the projector performance.*
- *Use a power strip and or surge protector. As power outages and brown-outs can KILL devices.*

3D Safety Information

Please follow all warnings and precautions as recommended before you or your child use the 3D function.

Warning

Children and teenagers may be more susceptible to health issues associated with viewing in 3D and should be closely supervised when viewing these images.

Photosensitive Seizure Warning and Other Health Risks

- Some viewers may experience an epileptic seizure or stroke when exposed to certain flashing images or lights contained in certain Projector pictures or video games. If you suffer from, or have a family history of epilepsy or strokes, please consult with a medical specialist before using the 3D function.
- Even those without a personal or family history of epilepsy or stroke may have an undiagnosed condition that can cause photosensitive epileptic seizures.
- Pregnant women, the elderly, sufferers of serious medical conditions, those who are sleep deprived or under the influence of alcohol should avoid utilizing the unit's 3D functionality.
- If you experience any of the following symptoms, stop viewing 3D pictures immediately and consult a

medical specialist: (1) altered vision; (2) light-headedness; (3) dizziness; (4) involuntary movements such as eye or muscle twitching; (5) confusion; (6) nausea; (7) loss of awareness; (8) convulsions; (9) cramps; and/ or (10) disorientation. Children and teenagers may be more likely than adults to experience these symptoms. Parents should monitor their children and ask whether they are experiencing these symptoms.

- Watching 3D projection may also cause motion sickness, perceptual after effects, disorientation, eye strain and decreased postural stability. It is recommended that users take frequent breaks to lessen the potential of these effects. If your eyes show signs of fatigue or dryness or if you have any of the above symptoms, immediately discontinue use of this device and do not resume using it for at least thirty minutes after the symptoms have subsided.
- Watching 3D projection while sitting too close to the screen for an extended period of time may damage your eyesight. The ideal viewing distance should be at least three times the screen height. It is recommended that the viewer's eyes are level with the screen.
- Watching 3D projection while wearing 3D glasses for an extended period of time may cause a headache or fatigue. If you experience a headache, fatigue or dizziness, stop viewing the 3D projection and rest.
- Do not use the 3D glasses for any other purpose than for watching 3D projection.
- Wearing the 3D glasses for any other purpose (as general spectacles, sunglasses, protective goggles, etc.) may be physically harmful to you and may weaken your eyesight.
- Viewing in 3D projection may cause disorientation for some viewers. Accordingly, DO NOT place your 3D PROJECTOR near open stairwells, cables, balconies, or other objects that can be tripped over, run into, knocked down, broken or fallen over.

Copyright

This publication, including all photographs, illustrations and software, is protected under international copyright laws, with all rights reserved. Neither this manual, nor any of the material contained herein, may be reproduced without written consent of the author.

© Copyright 2016

Disclaimer

The information in this document is subject to change without notice. The manufacturer makes no representations or warranties with respect to the contents hereof and specifically disclaims any implied warranties of merchantability or fitness for any particular purpose. The manufacturer reserves the right to revise this publication and to make changes from time to time in the content hereof without obligation of the manufacturer to notify any person of such revision or changes.

Trademark Recognition

Kensington is a U.S. registered trademark of ACCO Brand Corporation with issued registrations and pending applications in other countries throughout the world.

HDMI, the HDMI Logo, and High-Definition Multimedia Interface are trademarks or registered trademarks of HDMI Licensing LLC in the United States and other countries.

DLP®, DLP Link and the DLP logo are registered trademarks of Texas Instruments and BrilliantColor™ is a trademark of Texas Instruments.

All other product names used in this manual are the properties of their respective owners and are Acknowledged.

DARBEE is a trademark by Darbee Products, Inc.

MHL, Mobile High-Definition Link and the MHL Logo are trademarks or registered trademarks of MHL Licensing, LLC.

FCC

This device has been tested and found to comply with the limits for a Class B digital device pursuant to Part 15 of the FCC rules. These limits are designed to provide reasonable protection against harmful interference in a residential installation. This device generates, uses and can radiate radio frequency energy and, if not installed and used in accordance with the instructions, may cause harmful interference to radio communications.

However, there is no guarantee that interference will not occur in a particular installation. If this device does cause harmful interference to radio or television reception, which can be determined by turning the device off and on is encouraged to try to correct the interference by one or more of the following measures:

- Reorient or relocate the receiving antenna.
- Increase the separation between the device and receiver.
- Connect the device into an outlet on a circuit different from that to which the receiver is connected.
- Consult the dealer or an experienced radio/television technician for help.

Notice: Shielded cables

All connections to other computing devices must be made using shielded cables to maintain compliance with FCC regulations.

Caution

Changes or modifications not expressly approved by the manufacturer could void the user's authority, which is granted by the Federal Communications Commission, to operate this projector.

Operation Conditions

This device complies with Part 15 of the FCC Rules. Operation is subject to the following two conditions:

1. This device may not cause harmful interference and

2. This device must accept any interference received, including interference that may cause undesired operation.

Notice: Canadian users

This Class B digital apparatus complies with Canadian ICES-003.

Remarque à l'intention des utilisateurs canadiens

Cet appareil numerique de la classe B est conforme a la norme NMB-003 du Canada.

Declaration of Conformity for EU countries

- EMC Directive 2004/108/EC (including amendments)
- Low Voltage Directive 2006/95/EC
- R & TTE Directive 1999/5/EC (if product has RF function)

WEEE

Disposal instructions

Do not throw this electronic device into the trash when discarding. To minimize pollution and ensure utmost protection of the global environment, please recycle it.

INTRODUCTION

Package Overview

Carefully unpack and verify that you have the items listed below under standard accessories. Some of the items under optional accessories may not be available depending on the model, specification and your region of purchase. Please check with your place of purchase. Some accessories may vary from region to region.

The warranty card is only supplied in some specific regions. Please consult your dealer for detailed information.

Standard accessories

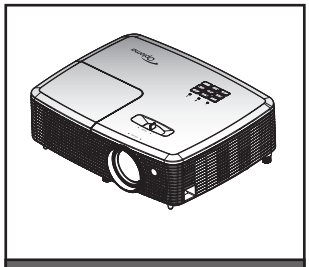

Projector

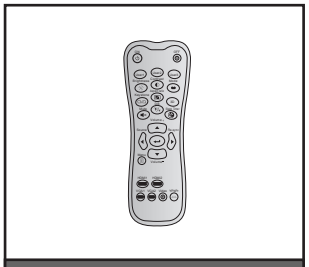

Remote control

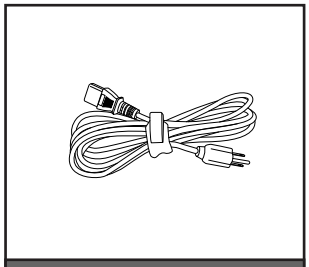

Power lead

- ☑ CD User Manual
- ☑ Warranty Card*
- ☑ Basic User Manual

Documentation

Note:

- *The remote control is shipped with the battery.*
- ** For European warranty Information, please visit www.optomaeurope.com.*

Optional accessories

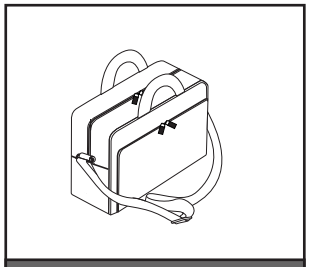

Carry bag

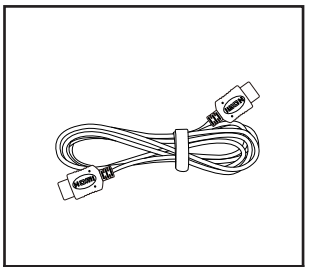

HDMI cable

Note: *Optional accessories vary depending on model, specification and region.*

INTRODUCTION

Product Overview

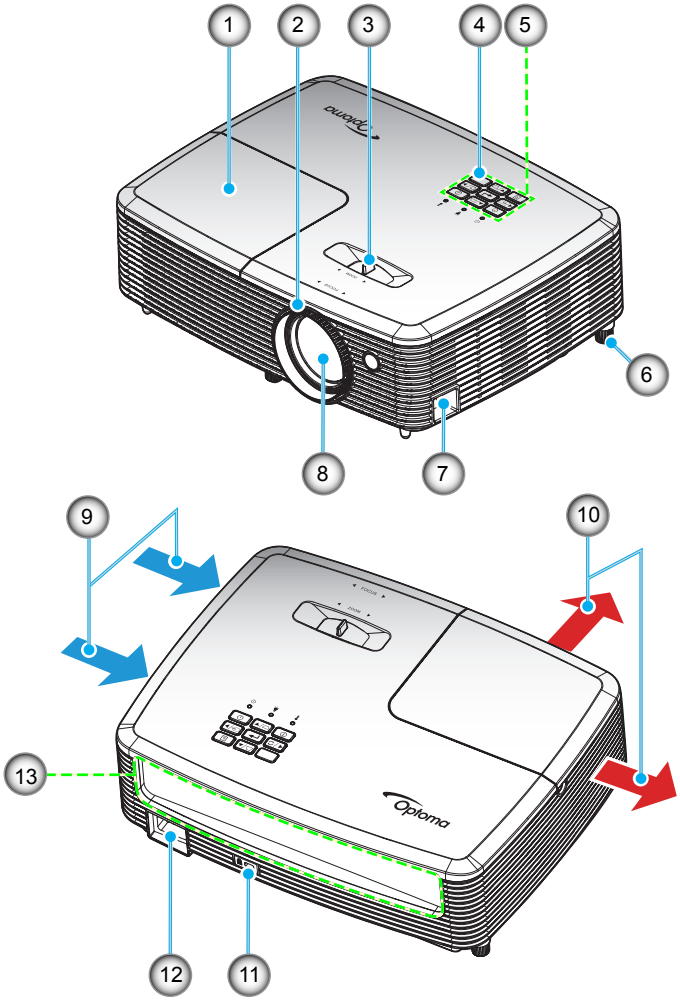

Note:

- Do not block projector inlet or outlet air vents.
- *Keep a minimum distance of 20 cm between the "inlet" and "outlet" labels.*

No	Item	No	Item
1.	Lamp Cover	8.	Lens
2.	Focus Ring	9.	Ventilation (inlet)
3.	Zoom Lever	10.	Ventilation (outlet)
4.	IR Receiver	11.	Kensington™ Lock Port
5.	Keypad	12.	Power Socket
6.	Tilt-Adjustment Foot	13.	Input / Output
7.	Security Bar		

INTRODUCTION

Connections

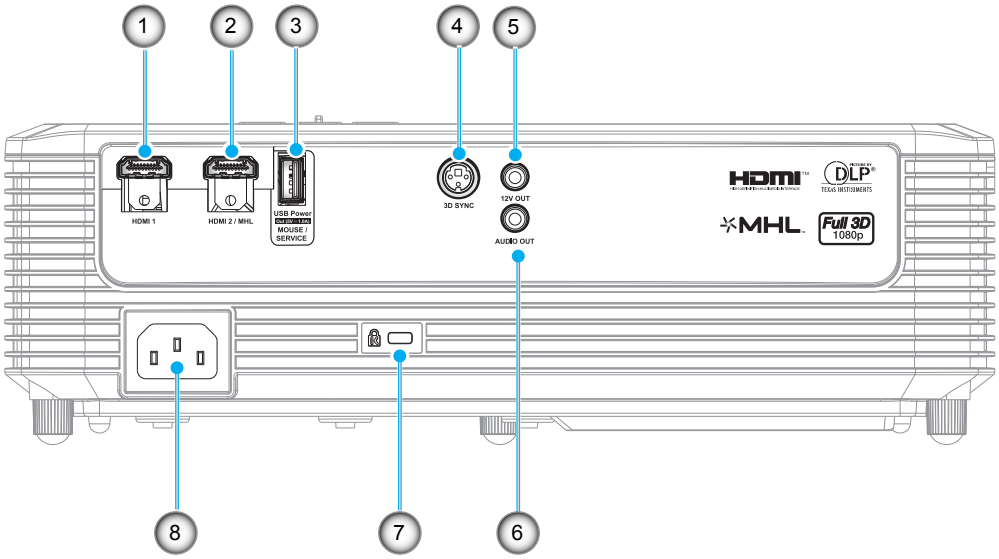

No	Item
1.	HDMI 1 Connector
2.	HDMI 2 / MHL Connector
3.	USB Power Out (5V⎓1A) Connector / MOUSE / SERVICE Connector
4.	3D Sync Connector
5.	12V OUT Connector
6.	AUDIO OUT Connector
7.	Kensington™ Lock Port
8.	Power Socket

Note: *Remote mouse requires special remote control.*

INTRODUCTION

Keypad

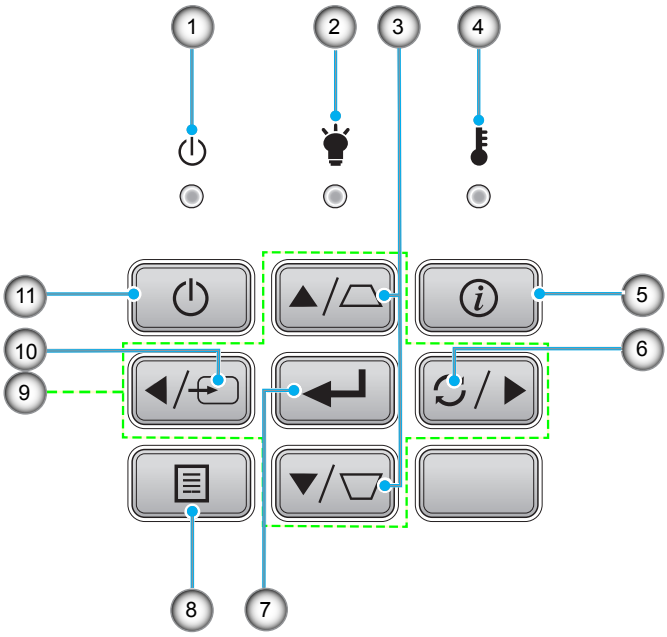

No	Item	No	Item
1.	On/Standby LED	7.	Enter
2.	Lamp LED	8.	Menu
3.	Keystone Correction	9.	Four Directional Select Keys
4.	Temp LED	10.	Source
5.	Information	11.	Power
6.	Re-Sync		

INTRODUCTION

Remote control

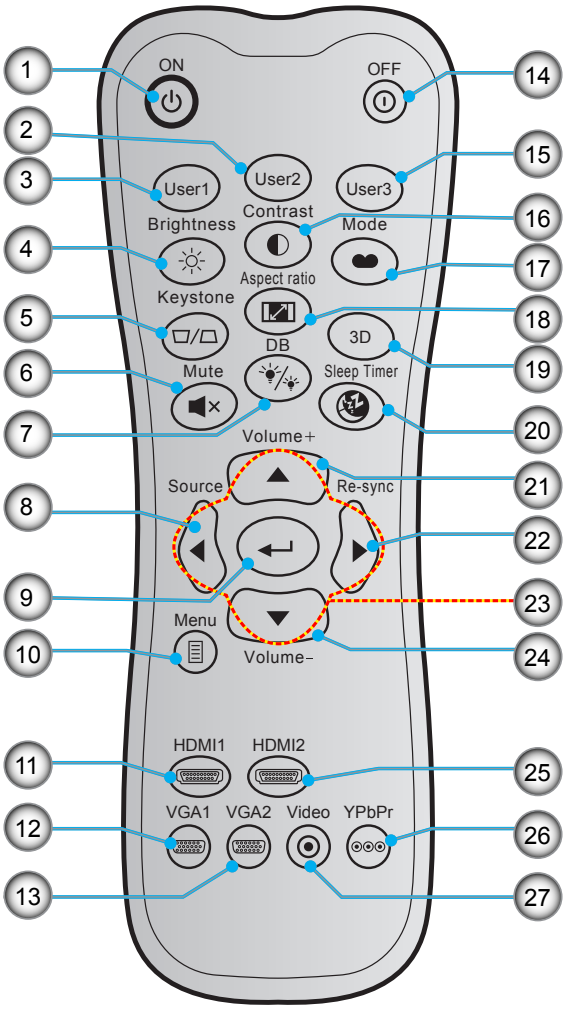

No	Item	No	Item
1.	Power On	15.	User 3
2.	User 2	16.	Contrast
3.	User 1	17.	Display Mode
4.	Brightness	18.	Aspect Ratio
5.	Keystone	19.	3D Menu On / Off
6.	Mute	20.	Sleep Timer
7.	DB (Dynamic Black)	21.	Volume +
8.	Source	22.	Re-Sync
9.	Enter	23.	Four Directional Select Keys
10.	Menu	24.	Volume -
11.	HDMI1	25.	HDMI2
12.	VGA1 (not supported)	26.	YPbPr (not supported)
13.	VGA2 (not supported)	27.	Video (not supported)
14.	Power Off		

Note: *Some keys may have no fucntion for models that do not support these features.*

INTRODUCTION

Remote control 2

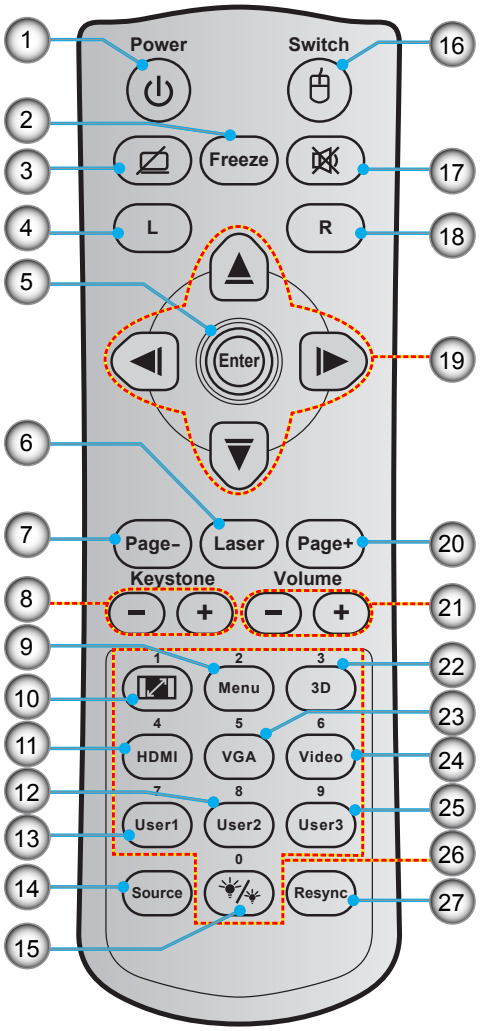

No	Item	No	Item
1.	Power On / Off	15.	Brightness Mode
2.	Freeze	16.	Mouse On / Off
3.	Display Blank / Audio Mute	17.	Mute
4.	Mouse Left Click	18.	Mouse Right Click
5.	Enter	19.	Four Directional Select Keys
6.	Laser	20.	Page +
7.	Page -	21.	Volume - / +
8.	Keystone - / +	22.	3D Menu On / Off
9.	Menu	23.	VGA
10.	Aspect Ratio	24.	Video
11.	HDMI	25.	User 3
12.	User 2	26.	Numeric Keypad (0-9)
13.	User 1	27.	Resync
14.	Source		

SETUP AND INSTALLATION

Installing the projector

Your projector is designed to be installed in one of four possible positions.

Your room layout or personal preference will dictate which installation location you select. Take into consideration the size and position of your screen, the location of a suitable power outlet, as well as the location and distance between the projector and the rest of your equipment.

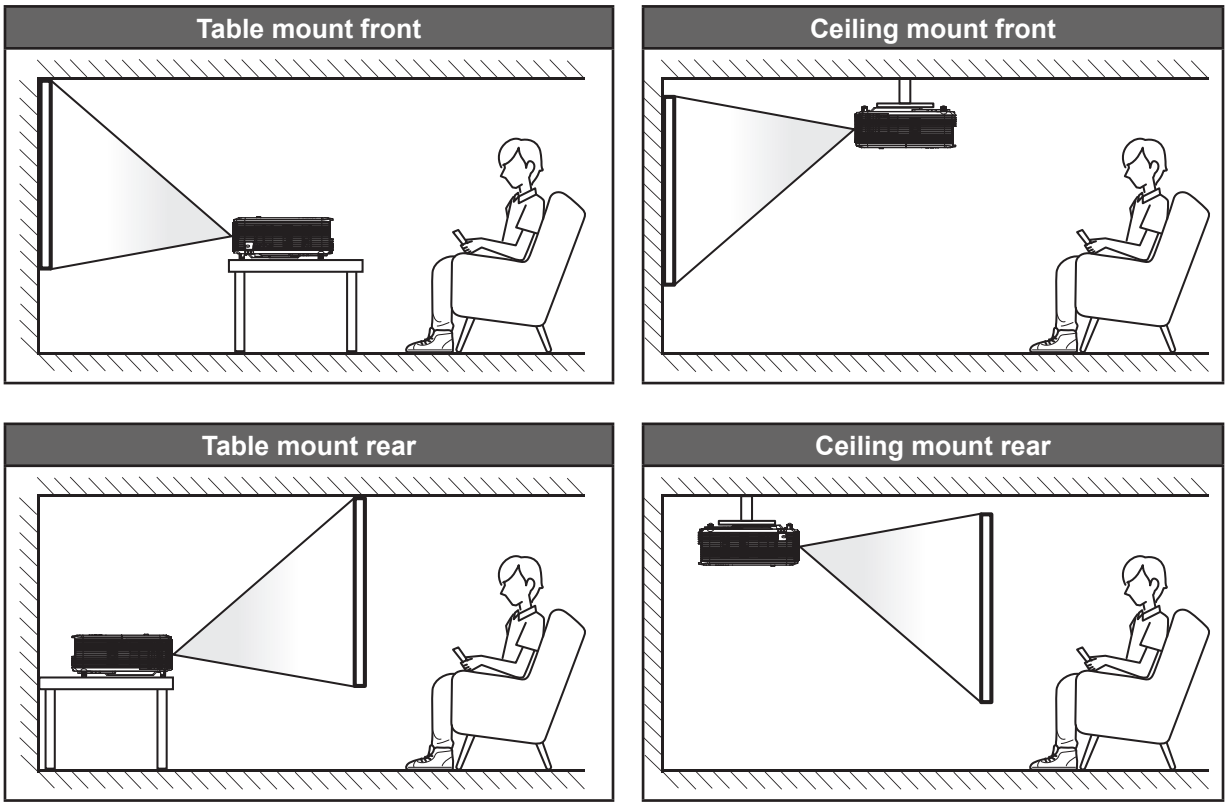

Projector should be placed flat on a surface and 90 degrees / perpendicular to the screen.

- How to determine projector location for a given screen size, please refer to distance table on pages *42-43*.
- How to determine screen size for a given distance, please refer to distance table on pages *42-43*.

Note: *The further away the projector is placed from the screen the projected image size increases and vertical offset also increases proportionally.*

IMPORTANT!

Do not operate the projector in any orientation other that table top or ceiling mount. The projector should be horizontal and not tilted either forwards/backwards or left/right. Any other orientation will invalidate the warranty and may shorten the lifetime of the projector lamp or the projector itself. For none standard installation advise please contact Optoma.

SETUP AND INSTALLATION

Connecting sources to the projector

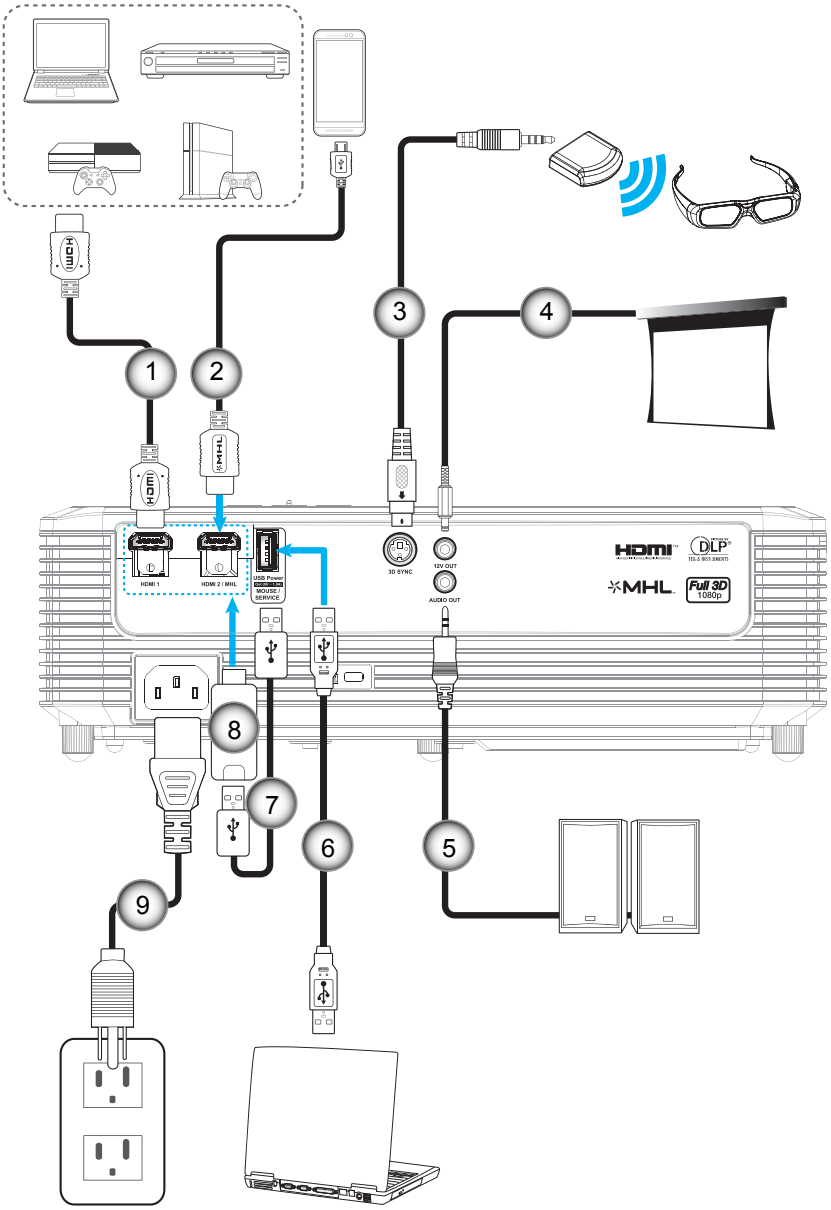

No	Item
1.	HDMI Cable
2.	HDMI / MHL Cable
3.	3D Emitter Cable
4.	12V DC Jack
5.	Audio Out Cable
6.	USB Cable (mouse control)
7.	USB Power Cable
8.	HDMI Dongle
9.	Power Cord

SETUP AND INSTALLATION

Adjusting the projector image

Image height

The projector is equipped with elevator feet for adjusting the image height.

1. Locate the adjustable foot you wish to adjust on the underside of the projector.
2. Rotate the adjustable foot clockwise or counterclockwise to raise or lower the projector.

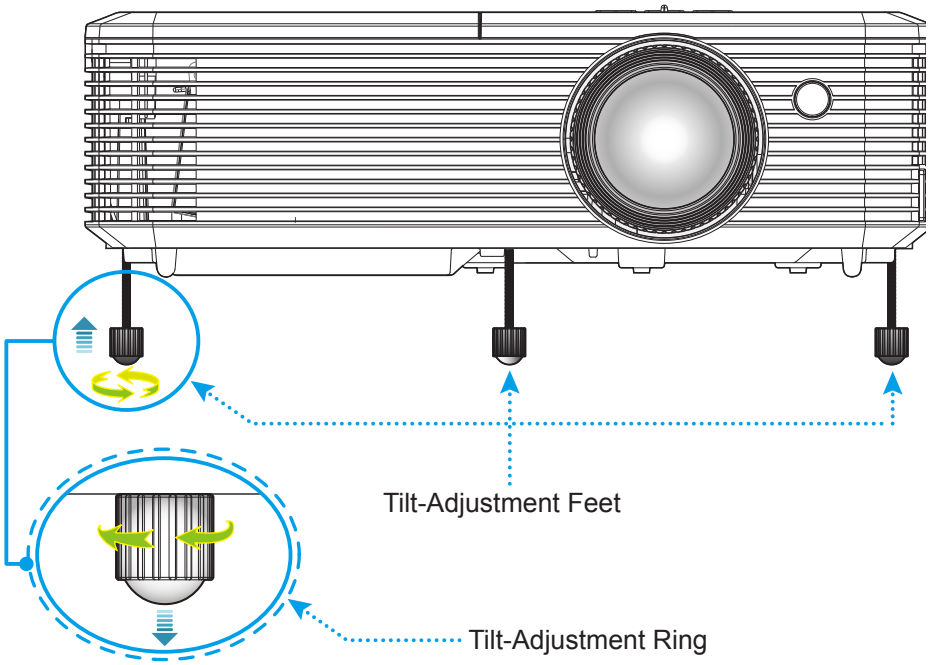

Zoom and focus

- To adjust the image size, turn the zoom lever clockwise or counterclockwise to increase or decrease the projected image size.
- To adjust the focus, turn the focus ring clockwise or counterclockwise until the image is sharp and legible.

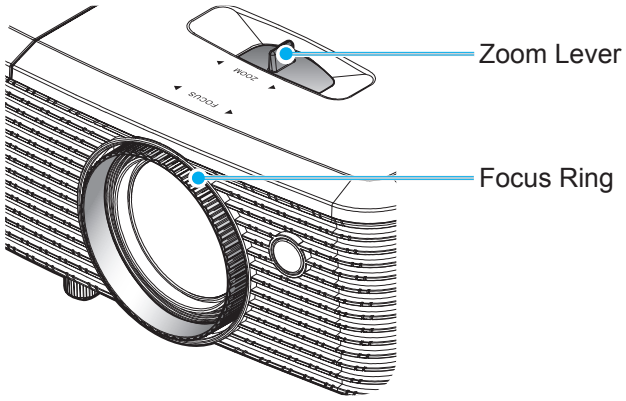

Note: *The projector will focus at a distance of 1.5m to 10m.*

SETUP AND INSTALLATION

Remote setup

Installing / replacing the batteries

Two AAA size batteries are supplied for the remote control.

1. Remove the battery cover on the back of the remote control.
2. Insert AAA batteries in the battery compartment as illustrated.
3. Replace back cover on remote control.

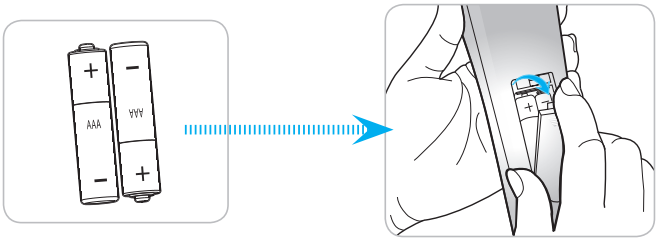

Note: *Replace only with the same or equivalent type batteries.*

CAUTION

Improper use of batteries can result in chemical leakage or explosion. Be sure to follow the instructions below.

- Do not mix batteries of different types. Different types of batteries have different characteristics.
- Do not mix old and new batteries. Mixing old and new batteries can shorten the life of new batteries or cause chemical leakage in old batteries.
- Remove batteries as soon as the are depleted. Chemicals that leak from batteries that come in contact with skin can cause a rash. If you find any chemical leakage, wipe thoroughly with a cloth.
- The batteries supplied with this product may have a shorter life expectancy due to storage conditions.
- If you will not be using the remote control for an extended period of time, remove the batteries.
- When you dispose of the batteries, you must obey the law in the relative area or country.

Effective range

Infra-Red (IR) remote control sensor is located on the top side and front side of the projector. Ensure to hold the remote control at an angle within 30 degrees perpendicular to the projector's IR remote control sensor to function correctly. The distance between the remote control and the sensor should not be longer than 7 meters (~ 23 feet).

- Make sure that there are no obstacles between the remote control and the IR sensor on the projector that might obstruct the infra-red beam.
- Make sure the IR transmitter of the remote control is not being shined by sunlight or fluorescent lamps directly.
- Please keep the remote controller away from fluorescent lamps for over 2 meters or the remote controller might become malfunction.
- If the remote control is closed to Inverter-Type fluorescent lamps, it might become ineffective from time to time.
- If the remote control and the projector are within a very short distance, the remote control might become ineffective.
- When you aim at the screen, the effective distance is less than 5 meters from the remote control to the screen and reflecting the IR beams back to the projector. However, the effective range might change according to screens.

SETUP AND INSTALLATION

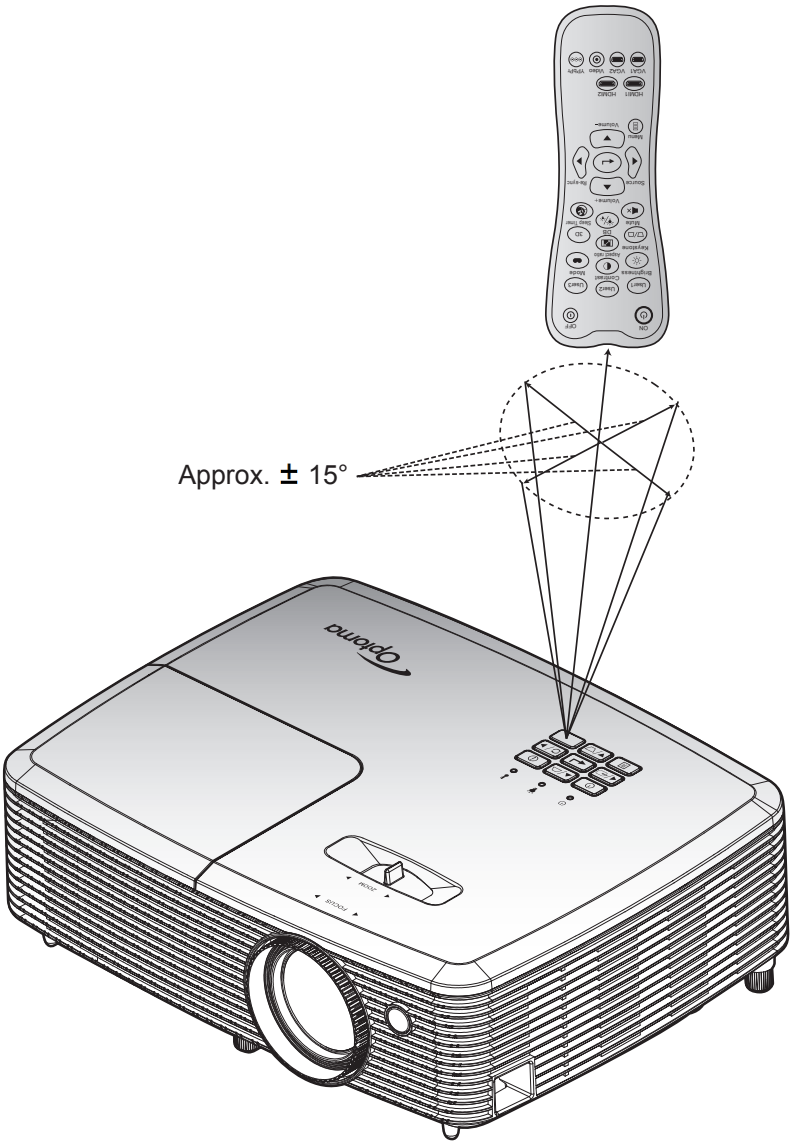

USING THE PROJECTOR

Powering on / off the projector

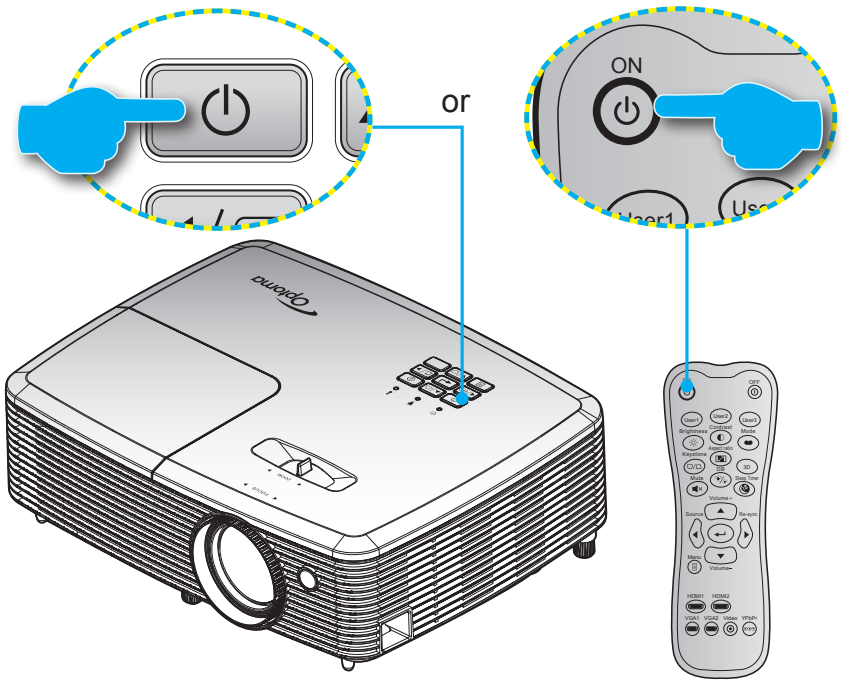

Powering on

1. Securely connect the power lead and signal/source cable. When connected, the On/Standby LED will turn red.
2. Turn on the projector by pressing the "⏻" on the projector keypad or the "⏻" on the remote control.
3. A start up screen will display in approximately 10 seconds and the On/Standby LED will be flashing green or flashing blue.

Note: *The first time the projector is turned on, you will be prompted to select the preferred language, projection orientation, and other settings.*

Powering off

1. Turn off the projector by pressing the "⏻" on the projector keypad or the "⏻" on the remote control.
2. The following message will be displayed:

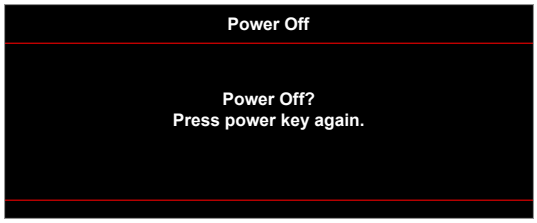

3. Press the "⏻" or the "⏻" button again to confirm, otherwise the message will disappear after 15 seconds. When you press the "⏻" or the "⏻" button for the second time, the projector will shut down.
4. The cooling fans will continue to operate for about 10 seconds for the cooling cycle and the On/Standby LED will flash green or flash blue. When the On/Standby LED turns solid red, this indicates the projector has entered standby mode. If you wish to turn the projector back on, you must wait until the cooling cycle has finished and the projector has entered standby mode. When the projector is in standby mode, simply press the "⏻" button again to turn on the projector.
5. Disconnect the power lead from the electrical outlet and the projector.

Note: *It is not recommended that the projector is turned on immediately, right after a power off procedure.*

USING THE PROJECTOR

Selecting an input source

Turn on the connected source that you want to display on the screen, such as computer, notebook, video player, etc. The projector will automatically detect the source. If multiple sources are connected, push the source button on the projector keypad or the remote control to select the desired input.

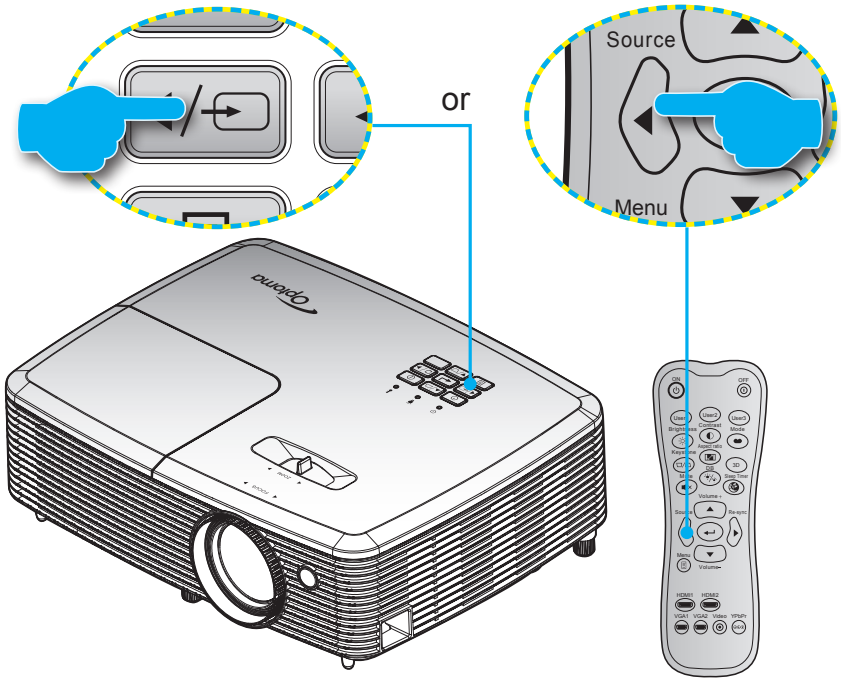

USING THE PROJECTOR

Menu navigation and features

The projector has multilingual on-screen display menus that allow you to make image adjustments and change a variety of settings. The projector will automatically detect the source.

1. To open the OSD menu, press ☰ on the remote control or the projector keyboard.
2. When OSD is displayed, use ▲▼ keys to select any item in the main menu. While making a selection on a particular page, press ↵ or ▶ key to enter sub menu.
3. Use ◀▶ keys to select the desired item in the sub menu and then press ↵ or ▶ key to view further settings. Adjust the settings by using ◀▶ keys.
4. Select the next item to be adjusted in the sub menu and adjust as described above.
5. Press the ↵ or ▶ to confirm, and the screen will return to the main menu.
6. To exit, press the ◀ or ☰ again. The OSD menu will close and the projector will automatically save the new settings.

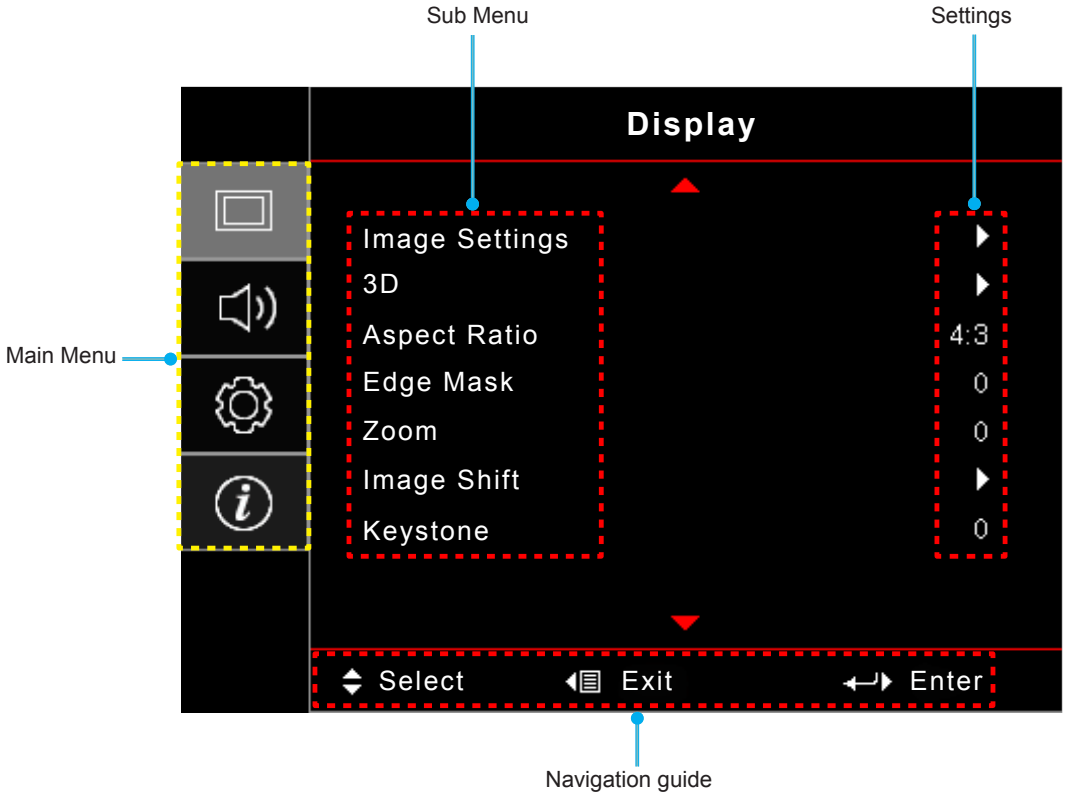

USING THE PROJECTOR

OSD Menu tree

Main Menu	Sub Menu	Sub Menu 2	Sub Menu 3	Sub Menu 4	Values
Display	Image Settings	Display Mode [Video]			Cinema
					Film
					Vivid
					Game
					Reference
					Bright
					USER
					3D
					ISF Day
					ISF Night
					ISF 3D
		Brightness			-50~50
		Contrast			-50~50
		Sharpness			1~15
		Color			-50~50
		Tint			-50~50
		Gamma	Film		
			Video		
			Graphics		
			Standard(2.2)		
			1.8		
			2.0		
			2.4		
		Color Settings	BrilliantColor™		1~10
			Color Temperature [Data model]		Warm
					Standard
					Cool
					Cold
			Color Matching	Color	R [Default]
					G
					B
					C
					Y
					M
					W
				Hue	-50~50 [Default:0]
				Saturation	-50~50 [Default:0]
				Gain	-50~50 [Default:0]
				Reset	Cancel [Default]
					Yes
				Exit	

USING THE PROJECTOR

Main Menu	Sub Menu	Sub Menu 2	Sub Menu 3	Sub Menu 4	Values
Display	Image Settings	Color Settings	RGB Gain/Bias	Red Gain	-50~50
				Green Gain	-50~50
				Blue Gain	-50~50
				Red Bias	-50~50
				Green Bias	-50~50
				Blue Bias	-50~50
				Reset	Cancel [Default]
					Yes
				Exit	
			Color Space [Not HDMI Input]		Auto [Default]
					RGB
					YUV
			Color Space [HDMI Input]		Auto [Default]
					RGB(0~255)
					RGB(16~235)
					YUV
		Brightness Mode [Lamp Base - Video]			Bright [Default]
					Eco.
					Dynamic
					Eco+
		Reset			
	3D	3D Mode			Off
					DLP-Link
					VESA [Default]
		3D->2D			3D [Default]
					L
					R
		3D Format			Auto [Default]
					SBS
					Top and Bottom
					Frame Sequential
		3D sync invert			On
					Off [Default]
	Aspect Ratio				4:3
					16:9
					LBX [except SVGA XGA models]
					Native
					Auto
	Edge Mask				0~10 [Default: 0]
	Zoom				-5~25 [Default: 0]

USING THE PROJECTOR

Main Menu	Sub Menu	Sub Menu 2	Sub Menu 3	Sub Menu 4	Values
Display	Image shift	H: 0; V: -50			[Default:0]
		H: -50; V: 0			
		H: 50; V: 0			
		H: 0; V: 50			
		H: -50; V: 0			
		H: 0; V: -50			
		H: 50; V: 0			
		H: 0; V: 50			
	Keystone				-40~40 [Default:0]
Audio	Mute				Off [Default]
					On
	Volume				0-10 [Default: 5]
Setup	Projection				Front [Default]
					Rear
					Ceiling-top
					Rear-top
	Lamp Settings	Lamp Reminder			Off
					On [Default]
		Lamp Reset			Cancel [Default]
					Yes
	Filter Settings	Filter Usage Hours			(Read only)
		Optional Filter Installed			Yes
					No
		Filter Reminder			Off
					300hr
					500hr [Default]
					800hr
					1000hr
		Filter Reset			Cancel [Default]
					Yes
	Power Settings	Direct Power On			Off [Default]
					On
		Signal Power On			Off [Default]
					On
		Auto Power Off (min)			0~180 (5 min increments) [Default: 20]
		Sleep Timer (min)			0~990 (30 min increments) [Default: 0]
			Always On		Yes
					No [Default]

USING THE PROJECTOR

Main Menu	Sub Menu	Sub Menu 2	Sub Menu 3	Sub Menu 4	Values
Setup	Power Settings	Quick Resume			Off [Default]
					On
		USB Power			Off [Default]
					On
					Auto
	Security	Security			
		Security Timer	Month		
			Day		
			Hour		
		Change Password			
	HDMI Link Settings	HDMI Link			Off
					On
		Inclusive of TV			No
					Yes
		Power On Link			Mutual
					PJ --> Device
					Device --> PJ
		Power Off Link			Off
					On
	Test Pattern				Green Grid
					Magenta Grid
					White Grid
					White
					Off
	Remote Settings [depends on remote]	IR Function			On
					Off
		User1			HDMI 2 [Default]
					Test Pattern
					Brightness
					Contrast
					Sleep Timer
					Color Matching
					Color Temperature
					Gamma
					Projection
					Lamp Settings
					Zoom
					Freeze
					MHL

Main Menu	Sub Menu	Sub Menu 2	Sub Menu 3	Sub Menu 4	Values
Setup	Remote Settings [depends on remote]	User2			HDMI 2
					Test Pattern
					Brightness
					Contrast
					Sleep Timer
					Color Matching
					Color Temperature
					Gamma
					Projection
					Lamp Settings
					Zoom
					Freeze
					MHL [Default]
		User3			HDMI 2
					Test Pattern
					Brightness
					Contrast
					Sleep Timer [Default]
					Color Matching
					Color Temperature
					Gamma
					Projection
					Lamp Settings
					Zoom
					Freeze
					MHL
	12V Trigger				On
					Off
	Options	Language			English [Default]
					Deutsch
					Français
					Italiano
					Español
					Português
					Polski
					Nederlands
					Svenska
					Norsk/Dansk
					Suomi
					ελληνικά
					繁體中文
					簡体中文
					日本語
					한국어

Main Menu	Sub Menu	Sub Menu 2	Sub Menu 3	Sub Menu 4	Values
Setup	Options	Language			Русский
					Magyar
					Čeština
					عــربي
					ไทย
					Türkçe
					فارســـى
					Tiếng Việt
					Bahasa Indonesia
					România
					Slovakian
		Menu Settings	Menu Location		Top left
					Top right
					Center [Default]
					Bottom left
					Bottom right
			Menu Timer		Off
					5sec
					10sec [Default]
		Auto Source			Off [Default]
					On
		Input Source			HDMI1
					HDMI2/MHL
		Input Name	HDMI1		Default [Default]
					Custom
			HDMI2/MHL		Default [Default]
					Custom
		High Altitude			Off [Default]
					On
		Display Mode Lock			Off [Default]
					On
		Keypad Lock			Off [Default]
					On
		Information Hide			Off [Default]
					On
		Logo			Default [Default]
					Neutral
		Background Color			None [Default]
					Blue
					Red
					Green
					Grey
					Logo

Main Menu	Sub Menu	Sub Menu 2	Sub Menu 3	Sub Menu 4	Values
Setup	Reset	Reset OSD			Cancel [Default]
					Yes
		Reset to Default			Cancel [Default]
					Yes
Information	Regulatory				
	Serial Number				
	Source				
	Resolution				00x00
	Refresh Rate				0.00Hz
	Display Mode				
	Lamp Hours	Bright			0 hr
		Eco.			0 hr
		Dynamic			0 hr
		Eco+			0 hr
		Total			
	Filter Hours				
	Brightness Mode				
	FW Version	System			
		MCU			

Note:

- *The "Lamp Reset" in OSD will only reset both Lamp Hours in OSD and Lamp Hours in service mode. The Projection Hours in service mode will not be reset.*
- *When you made the changes on the "IR Function", "Projection", or "Keypad Lock" function, a confirmation message will appear on the screen. Select "Yes" to save the settings.*
- *Each display mode can be adjusted and saved the value.*
- *In 3D timing mode, the zoom/edge mask will be disabled to prevent from image break.*

USING THE PROJECTOR

Display menu

Display image settings menu

Display Mode

There are many factory presets optimized for various types of images.

- **Cinema**: Select this mode for home theater.
- **Film**: Select to display the purest color settings for home theatre.
- **Vivid**: In this mode, the color saturation and brightness are well-balanced. Choose this mode for playing games.
- **Game**: Select this mode to increase the brightness and response time level for enjoying video games.
- **Reference**: This mode is intended to reproduce as close as possible the image the way the movie director intended. Color, color temperature, brightness, contrast and gamma settings are all configured to standard reference levels. Select this mode to watch a video.
- **Bright**: Maximum brightness from PC input.
- **USER**: Memorize user's settings.
- **3D**: To experience the 3D effect, you need to have 3D glasses. Make sure your PC/portable device has a 120 Hz signal output quad buffered graphics card and a 3D Player installed.
- **ISF Day**: Optimize the image with the ISF Day mode to be perfectly calibrated and high picture quality.
- **ISF Night**: Optimize the image with the ISF Night mode to be perfectly calibrated and high picture quality.
- **ISF 3D**: Optimize the image with the ISF 3D mode to be perfectly calibrated and high picture quality.

Brightness

Adjust the brightness of the image.

Contrast

The contrast controls the degree of difference between the lightest and darkest parts of the picture.

Sharpness

Adjust the sharpness of the image.

Color

Adjust a video image from black and white to fully saturated color.

Tint

Adjust the color balance of red and green.

Gamma

Set up gamma curve type. After the initial setup and fine tuning is completed, utilize the Gamma Adjustment steps to optimize your image output.

- **Film**: For home theater.
- **Video**: For video or TV source.
- **Graphics**: For PC / Photo source.
- **Standard(2.2)**: For standardized setting.
- **1.8/ 2.0/ 2.4**: For specific PC / Photo source.

Color Settings

Configure the color settings.

- **BrilliantColor™**: This adjustable item utilizes a new color-processing algorithm and enhancements to enable higher brightness while providing true, more vibrant colors in picture.
- **Color Temperature (data-mode only)**: Select a color temperature from Warm, Standard, Cool, or Cold.
- **Color Matching**: Select the following options:
  - Color: Adjust the red (R), green (G), black (B), cyan (C), yellow (Y), magenta (M), and white (W) level of the image.
  - Hue: Adjust the color balance of red and green.
  - Saturation: Adjust a video image from black and white to fully saturated color.
  - Gain: Adjust the image brightness.
  - Reset: Return the factory default settings for color matching.
  - Exit: Exit the “Color Matching” menu.
- **RGB Gain/Bias:** This settings allows to configure the brightness (gain) and contrast (bias) of an image.
  - Reset: Return the factory default settings for RGB gain/bias.
  - Exit: Exit the “RGB Gain/Bias” menu.
- **Color Space (non-HDMI input only)**: Select an appropriate color matrix type from the following: AUTO, RGB, or YUV.
- **Color Space (HDMI input only)**: select an appropriate color matrix type from the following: Auto, RGB(0-255), RGB(16-235), and YUV.

Brightness Mode (Lamp base-video)

Adjust the brightness mode settings for lamp-based projectors.

- **Bright**: Choose “Bright” to increase the brightness.
- **Eco.**: Choose “Eco.” to dim the projector lamp which will lower power consumption and extend the lamp life.
- **Dynamic**: Choose “Dynamic” to dim the lamp power which will be based on brightness level of the content and adjust lamp power consumption between 100% and 30% dynamically. The lamp life will be extended.
- **Eco+**: When Eco+ mode is activated, the brightness level of the content is automatically detected to significantly reduced lamp power consumption (up to 70%) during periods of inactivity.

Reset

Return the factory default settings for color settings.

Display 3D menu

3D Mode

Use this option to disable the 3D function or select the appropriate the 3D function.

- **Off**: Select “Off” to turn off 3D mode.
- **DLP-Link**: Select to use optimized settings for DLP 3D Glasses.
- **VESA**: Select “VESA” to use optimized setting for VESA 3D Glasses.

3D → 2D

Use this option to specify how the 3D content should appear on the screen.

- **3D:** Display 3D signal.
- **L (Left):** Display the left frame of 3D content.
- **R (Right):** Display the right frame of 3D content.

3D Format

Use this option to select the appropriate 3D format content.

- **Auto**: When a 3D identification signal is detected, the 3D format is selected automatically.
- **SBS**: Display 3D signal in “Side-by-Side” format.
- **Top and Bottom**: Display 3D signal in “Top and Bottom” format.
- **Frame Sequential**: Display 3D signal in “Frame Sequential” format.

3D Sync Invert

Use this option to enable/disable the 3D sync invert function.

Display aspect ratio menu

Aspect Ratio

Select the aspect ratio of the displayed image between the following options:

- **4:3**: This format is for 4:3 input sources.
- **16:9**: This format is for 16:9 input sources, like HDTV and DVD enhanced for Wide screen TV.
- **LBX (except SVGA and XGA models)**: This format is for non-16x9, letterbox source and if you use external 16x9 lens to display 2.35:1 aspect ratio in full resolution.
- **Native**: This format displays the original image without any scaling.
- **Auto**: Automatically selects the appropriate display format.

Note:

- *Detailed informations about LBX mode:*
  - *Some Letter-Box Format DVDs are not enhanced for 16x9 TVs. In this situation, the image will not look right when displaying image in 16:9 mode. In this situation, please try to use the 4:3 mode to view the DVD. If the content is not 4:3, there will be black bars around the image in 16:9 display. For this type of content, you can use LBX mode to fill the image on the 16:9 display.*
  - *If you use an external anamorphic lens, this LBX mode also allows you to watch a 2.35:1 content (include Anamorphic DVD and HDTV film source) that supports anamorphic wide is enhanced for 16x9 Display in a wide 2.35:1 image. In this case, there are no black bars. Lamp power and vertical resolution are fully utilized.*

1080 scaling table:

16 : 9 screen	480i/p	576i/p	1080i/p	720p	PC
4x3	Scale to 1440x1080.				
16x9	Scale to 1920x1080.				
LBX	Scale to 1920x1440, then get the central 1920x1080 image to display.				
Native mode	1:1 mapping centered. No scaling will be made; the image is displayed with the resolution based on input source.				

Display edge mask menu

Edge Mask

Use this function to remove the video encoding noise on the edge of video source.

Display zoom menu

Zoom

Use to reduce or magnify an image on the projection screen.

Display image shift menu

Image Shift

Adjust the projected image position horizontally (H) or vertically (V).

Display keystone menu

Keystone

Adjust the image distortion caused by tilting the projector.

USING THE PROJECTOR

Audio menu

Audio mute menu

Mute

Use this option to temporarily turn off the sound.

- **On:** Choose the “On” to turn mute on.
- **Off:** Choose the “Off” to turn mute off.

Note: *“Mute” function affects both internal and external speaker volume.*

Audio volume menu

Volume

Adjust the volume level.

Setup menu

Setup projection menu

Projection

Select the preferred projection between front, rear, ceiling-top, and rear-top.

Setup lamp settings menu

Lamp Reminder

Choose this function to show or to hide the warning message when the changing lamp message is displayed. The message will appear 30 hours before suggested replacement of lamp.

Lamp Reset

Resets the lamp hour counter after replacing the lamp.

Setup filter settings menu

Filter Usage Hours

Display the filter time.

Optional Filter Installed

Set the warning message setting.

- **Yes:** Display warning message after 500 hours of use.

Note: *“Filter Usage Hours / Filter Reminder / Filter Reset” will only appear when “Optional Filter Installed” is “Yes”.*

- **No:** Turn off warning message.

Filter Reminder

Choose this function to show or hide the warning message when the changing filter message is displayed. The available options include 300hr, 500hr, 800hr, and 1000hr.

Filter Reset

Reset the dust filter counter after replacing or cleaning the dust filter.

USING THE PROJECTOR

Setup power settings menu

Direct Power On

Choose “On” to activate Direct Power mode. The projector will automatically power on when AC power is supplied, without pressing the “Power” key on the projector keypad or on the remote control.

Signal Power On

Choose “On” to activate Signal Power mode. The projector will automatically power on when a signal is detected, without pressing the “Power” key on the projector Keypad or on the remote control.

Note: *If the “Signal Power On” option is turned “On”, the power consumption of the projector in standby mode will be over 3W.*

Auto Power Off (min)

Sets the countdown timer interval. The countdown timer will start, when there is no signal being sent to the projector. The projector will automatically power off when the countdown has finished (in minutes).

Sleep Timer (min)

Configure the sleep timer.

- **Sleep Timer (min):** Sets the countdown timer interval. The countdown timer will start, with or without a signal being sent to the projector. The projector will automatically power off when the countdown has finished (in minutes).

  Note: *The Sleep Timer is reset every time when the projector is powered off.*
- **Always On:** Check to set the sleep timer always on.

Quick Resume

Set the quick resume setting.

- **On:** If the projector is accidentally turned off, this feature allows the projector to be instantly powered on again, if selected within a period of 100 seconds.
- **Off:** The fan will start cooling the system after 10 seconds when user turns off the projector.

USB Power

Set the USB power setting.

- **Off:** Disable the USB power function.
- **On:** Enable the USB power function.
- **Auto:** The USB power function is automatically enabled when a device is connected to the USB Power Out (5V⎓1A) Connector.

Setup security menu

Security

Enable this function to prompt for a password before using the projector.

- **On:** Choose “On” to use security verification when the turning on the projector.
- **Off:** Choose “Off” to be able to switch on the projector without password verification.

Security Timer

Can be select the time (Month/Day/Hour) function to set the number of hours the projector can be used. Once this time has elapsed you will be requested to enter your password again.

Change Password

Use to set or modify the password that is prompted when turning the projector on.

USING THE PROJECTOR

Setup HDMI link settings menu

Note:

- *When you connect HDMI CEC-compatible devices to the projector with HDMI cables, you can control them on the same power on or power off status using the HDMI Link control feature in the projector's OSD. This lets one device or multiple devices in a group power on or power off via HDMI Link Feature in a typical configuration, your DVD player may be connected to the projector through an amplifier or home theater system.*

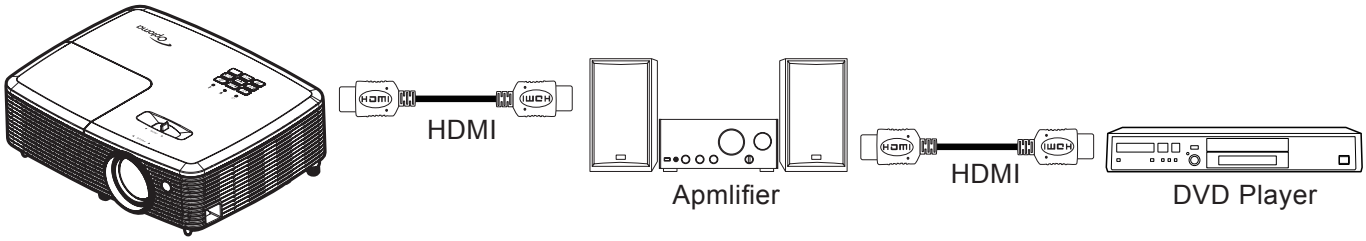

HDMI Link

Enable/disable the HDMI Link function. The inclusive TV, power on link, and power off link options will only available if the setting is set to "On".

Inclusive of TV

Set to "Yes" if you prefer both TV and projector to be automatically turned off at the same time. To prevent both devices to be turned off at the same time, set the setting to "No".

Power On Link

CEC power on command. Select between the following options:

- **Mutual:** Both projector and CEC device will be turned on simultaneously.
- **PJ -> Device:** The CEC device will be turned on only after the projector is switched on.
- **Device -> PJ**: The projector will be switched on only after the CEC device is turned on.

Power Off Link

Enable this function to let both HDMI Link and projector to be automatically turned off at the same time.

Setup test pattern menu

Test Pattern

Select the test pattern from green grid, magenta grid, white grid, white, or disable this function (off).

Setup remote settings menu

IR Function

Set the IR function setting.

- **On:** Choose "On", the projector can be operated by the remote control from top IR receiver.
- **Off:** Choose "Off", the projector can't be operated by the remote control from top IR receiver. By selecting "Off", you will be able to use the Keypad keys.

User1/ User2/ User3

Assign the default function for User1, User2, or User3 between HDMI 2, test pattern, brightness, contrast, sleep timer, color matching, color temperature, gamma, projection, lamp settings, zoom, freeze, and MHL.

USING THE PROJECTOR

Setup 12V trigger menu

12V Trigger

Use this function to enable or disable the trigger.

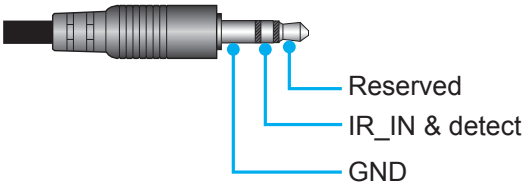

- Off: Choose “Off” to disable the trigger.
- On: Choose “On” to enable the trigger.

Setup options menu

Language

Select the multilingual OSD menu between English, German, French, Italian, Spanish, Portuguese, Polish, Dutch, Swedish, Norwegian/Danish, Finnish, Greek, traditional Chinese, simplified Chinese, Japanese, Korean, Russian, Hungarian, Czechoslovak, Arabic, Thai, Turkish, Farsi, Vietnamese, Indonesian, Romanian, and Slovakian.

Menu Settings

Set the menu location on the screen and configure menu timer settings.

- **Menu Location**: Select the menu location on the display screen.
- **Menu Timer**: Set the duration where the OSD menu stays visible on the screen.

Auto Source

Choose this option to let the projector automatically find an available input source.

Input Source

Select the input source between HDMI1 and HDMI2/MHL.

Input Name

Use to rename the input function for easier identification. The available options include HDMI1 and HDMI2/MHL.

High Altitude

When “On” is selected, the fans will spin faster. This feature is useful in high altitude areas where the air is thin.

Display Mode Lock

Choose “On” or “Off” to lock or unlock adjusting display mode settings.

Keypad Lock

When the keypad lock function is “On”, the Keypad will be locked. However, the projector can be operated by the remote control. By selecting “Off”, you will be able to reuse the Keypad.

Information Hide

Enable this function to hide the information message.

- **Off:** Choose “On” to hide the info message.
- **On:** Choose “Off” to show the “searching” message.

Logo

Use this function to set the desired startup screen. If changes are made, they will take effect the next time the projector is powered on.

- **Default:** The default startup screen.
- **Neutral:** Logo is not displayed on startup screen.

Background Color

Use this function to display a blue, red, green, grey color, none, or logo screen when no signal is available.

Setup reset OSD menu

Reset OSD

Return the factory default settings for OSD menu settings.

Setup reset to default menu

Reset to Default

Return the factory default settings for all settings.

Info menu

Info menu

View the projector information as listed below:

- Regulatory
- Serial Number
- Source
- Resolution
- Refresh Rate
- Display Mode
- Lamp Hours
- Filter Hours
- Brightness Mode
- FW Version

MAINTENANCE

Replacing the lamp

The projector automatically detects the lamp life. When the lamp life is nearing the end of use, a warning message will appear on the screen.

When you see this message, please contact your local reseller or service center to change the lamp as soon as possible. Make sure the projector has been cooled down for at least 30 minutes before changing the lamp.

Warning: If ceiling mounted, please use caution when opening the lamp access panel. It is recommended to wear safety glasses if changing the bulb when ceiling mounted. Caution must be used to prevent any loose parts from falling out of projector.

Warning: Lamp compartment is hot! Allow it to cool down before changing lamp!

Warning: To reduce the risk of personal injury, do not drop the lamp module or touch the lamp bulb. The bulb may shatter and cause injury if it is dropped.

MAINTENANCE

Replacing the lamp (continued)

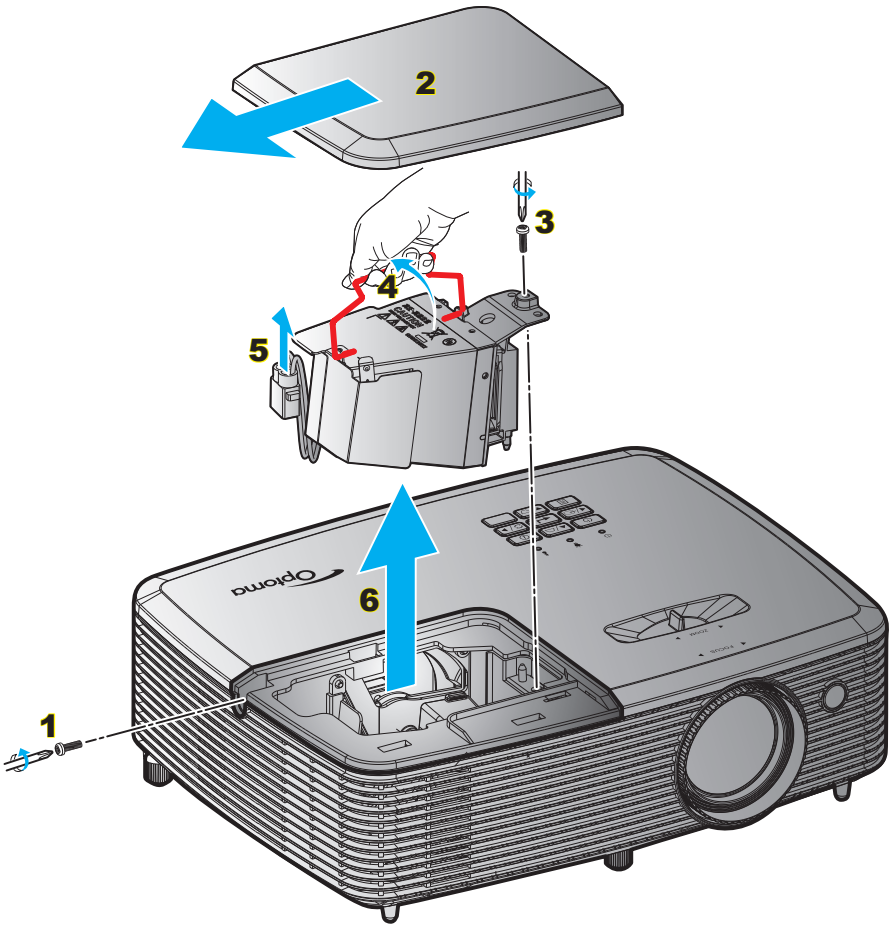

Procedure:

1. Switch off the power to the projector by pressing the "⏻" button on the remote control or the projector keypad.
2. Allow the projector to cool down for at least 30 minutes.
3. Disconnect the power cord.
4. Unscrew the screw on the cover. 1
5. Remove the cover. 2
6. Unscrew the screw on the lamp module. 3
7. Lift up the lamp handle. 4
8. Remove the lamp cord. 5
9. Remove the lamp module carefully. 6
10. To replace the lamp module, reverse the previous steps.
11. Turn on the projector and reset the lamp timer.
12. Lamp Reset: (i) Press "Menu" → (ii) Select "Setup" → (iii) Select "Lamp Settings" → (iv) Select "Lamp Reset" → (v) Select "Yes".

Note:

- *The screw on the lamp cover and the lamp cannot be removed.*
- *The projector cannot be turned on if the lamp cover has not been placed back on the projector.*
- *Do not touch the glass area of the lamp. Hand oil can cause the lamp shatter. Use a dry cloth to clean the lamp module if it was accidentally touched.*

MAINTENANCE

Installing and cleaning the dust filter

Installing the dust filter

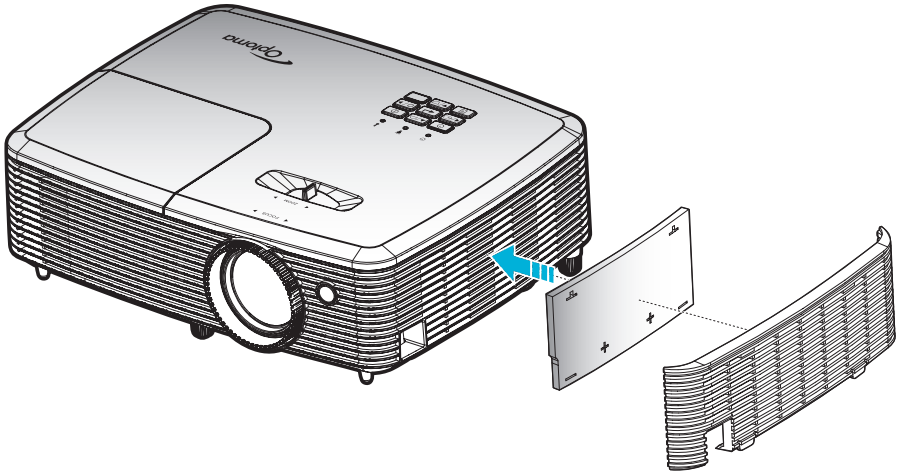

Note: *Dust filters are only required/supplied in the selected regions with excessive dust.*

Cleaning the dust filter

We recommend you to clean the dust filter every three months. Clean it more often if the projector is used in a dusty environment.

Procedure:

1. Switch off the power to the projector by pressing the "⏻" button on the projector keypad or the "⏻" button on the remote control.
2. Disconnect the power cord.
3. Remove the dust filter carefully. 1
4. Clean or replace the dust filter. 2
5. To install the dust filter, reverse the previous steps.

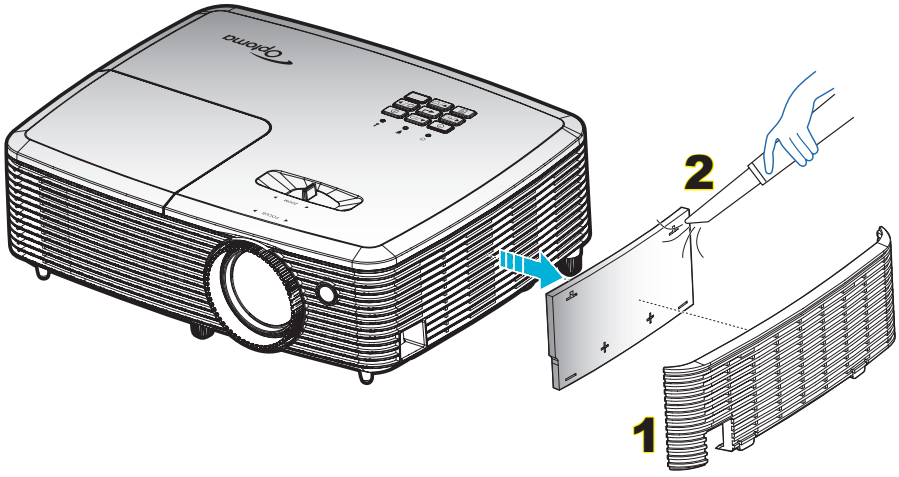

ADDITIONAL INFORMATION

Compatible resolutions

Digital compatibility

B0/Established Timing	B0/Standard Timing	B0/Detail Timing	B1/Video Mode	B1/Detail Timing
720x400 @ 70Hz	1280x720 @ 60Hz	Native timing:	640x480p @ 60Hz	720x480p @ 60Hz
640x480 @ 60Hz	1280x800 @ 60Hz	XGA: 1024x768 @ 60Hz	720x480p @ 60Hz	1280x720p @ 60Hz
640x480 @ 67Hz	1280x1024 @ 60Hz	WXGA: 1280x800 @ 60Hz	1280x720p @ 60Hz	1366x768 @ 60Hz
640x480 @ 72Hz	1400x1050 @ 60Hz	1080P: 1920x1080 @ 60Hz	1920x1080i @ 60Hz	1920x1080i @ 50Hz
640x480 @ 75Hz	1600x1200 @ 60Hz		720(1440)x480i @ 60Hz	1920x1080p @ 60Hz
800x600 @ 56Hz	1440x900 @ 60Hz		1920x1080p @ 60Hz	
800x600 @ 60Hz	1280x720 @ 120Hz		720x576p @ 50Hz	
800x600 @ 72Hz	1024x768 @ 120Hz		1280x720p @ 50Hz	
800x600 @ 75Hz			1920x1080i @ 50Hz	
832x624 @ 75Hz			720(1440)x576i @ 50Hz	
1024x768 @ 60Hz			1920x1080p @ 50Hz	
1024x768 @ 70Hz			1920x1080p @ 24Hz	
1024x768 @ 75Hz			1920x1080p @ 30Hz	
1280x1024 @ 75Hz				
1152x870 @ 75Hz				

True 3D video compatibility

		Input timing		
Input resolutions	HDMI 1.4a 3D Input	1280x720P @ 50Hz	Top - and - Bottom	
		1280x720P @ 60Hz	Top - and - Bottom	
		1280x720P @ 50Hz	Frame packing	
		1280x720P @ 60Hz	Frame packing	
		1920x1080i @ 50 Hz	Side- by-Side (Half)	
		1920x1080i @ 60 Hz	Side- by-Side (Half)	
		1920x1080P @ 24 Hz	Top - and- Bottom	
		1920x1080P @ 24 Hz	Frame packing	
	HDMI 1.3	1920x1080i @ 50Hz	Side-by-Side(Half)	SBS mode is on
		1920x1080i @ 60Hz		
		1280x720P @ 50Hz		
		1280x720P @ 60Hz		
		1920x1080i @ 50Hz	Top-and-Bottom	TAB mode is on
		1920x1080i @ 60Hz		
		1280x720P @ 50Hz		
		1280x720P @ 60Hz		
		480i 1024x768 @ 120Hz 1280x720 @ 120Hz	HQFS	3D format is Frame sequential

Note:

- *If 3D input is 1080p@24hz, the DMD should replay with integral multiple with 3D mode.*
- *Support NVIDIA 3DTV Play if there is no patent fee from Optoma. 1080i@25hz and 720p@50hz will run in 100 hz; other 3D timing will run in 120hz.*
- *1080p@24hz will run in 144Hz.*

ADDITIONAL INFORMATION

Image size and projection distance

(1080P) (image size and distance in meters and feet)

Diagonal length (inch) size of 16:9 Screen	Screen Size W x H				Projection Distance (D)				Offset (Hd)	
	(m)		(feet)		(m)		(feet)			
	Width	Height	Width	Height	Wide	Tele	Wide	Tele	(m)	(feet)
30.00	0.66	0.37	2.18	1.23	0.98	1.08	3.22	3.54	0.06	0.20
40.00	0.89	0.50	2.91	1.63	1.31	1.43	4.30	4.69	0.08	0.26
60.00	1.33	0.75	4.36	2.45	1.97	2.15	6.46	7.05	0.12	0.39
70.00	1.55	0.87	5.08	2.86	2.29	2.51	7.51	8.23	0.14	0.46
80.00	1.77	1.00	5.81	3.27	2.62	2.87	8.60	9.42	0.16	0.52
90.00	1.99	1.12	6.54	3.68	2.95	3.23	9.68	10.60	0.18	0.59
100.00	2.21	1.25	7.26	4.09	3.28	3.59	10.76	11.78	0.20	0.65
120.00	2.66	1.49	8.72	4.90	3.93	4.3	12.89	14.11	0.24	0.78
150.00	3.32	1.87	10.89	6.13	4.91	5.38	16.11	17.65	0.30	0.98
180.00	3.98	2.24	13.07	7.35	5.9	6.46	19.36	21.19	0.36	1.18
250.00	5.53	3.11	18.16	10.21	8.19	8.97	26.87	29.43	0.50	1.63
300.00	6.64	3.74	21.79	12.26	9.83	10.76	32.25	35.30	0.60	1.96

(1080P) (image size and distance in meters and inches)

Diagonal length (inch) size of 16:9 Screen	Screen Size W x H				Projection Distance (D)				Offset (Hd)	
	(m)		(inch)		(m)		(inch)			
	Width	Height	Width	Height	Wide	Tele	Wide	Tele	(m)	(inch)
30.00	0.66	0.37	26.15	14.71	0.98	1.08	38.58	42.52	0.06	2.35
40.00	0.89	0.50	34.86	19.61	1.31	1.43	51.57	56.30	0.08	3.14
60.00	1.33	0.75	52.29	29.42	1.97	2.15	77.56	84.65	0.12	4.71
70.00	1.55	0.87	61.01	34.32	2.29	2.51	90.16	98.82	0.14	5.49
80.00	1.77	1.00	69.73	39.22	2.62	2.87	103.15	112.99	0.16	6.28
90.00	1.99	1.12	78.44	44.12	2.95	3.23	116.14	127.17	0.18	7.06
100.00	2.21	1.25	87.16	49.03	3.28	3.59	129.13	141.34	0.20	7.84
120.00	2.66	1.49	104.59	58.83	3.93	4.30	154.72	169.29	0.24	9.41
150.00	3.32	1.87	130.74	73.54	4.91	5.38	193.31	211.81	0.30	11.77
180.00	3.98	2.24	156.88	88.25	5.90	6.46	232.28	254.33	0.36	14.12
250.00	5.53	3.11	217.89	122.57	8.19	8.97	322.44	353.15	0.50	19.61
300.00	6.64	3.74	261.47	147.08	9.83	10.76	387.01	423.62	0.60	23.53

Note: *Zoom ratio is 1.1x.*

ADDITIONAL INFORMATION

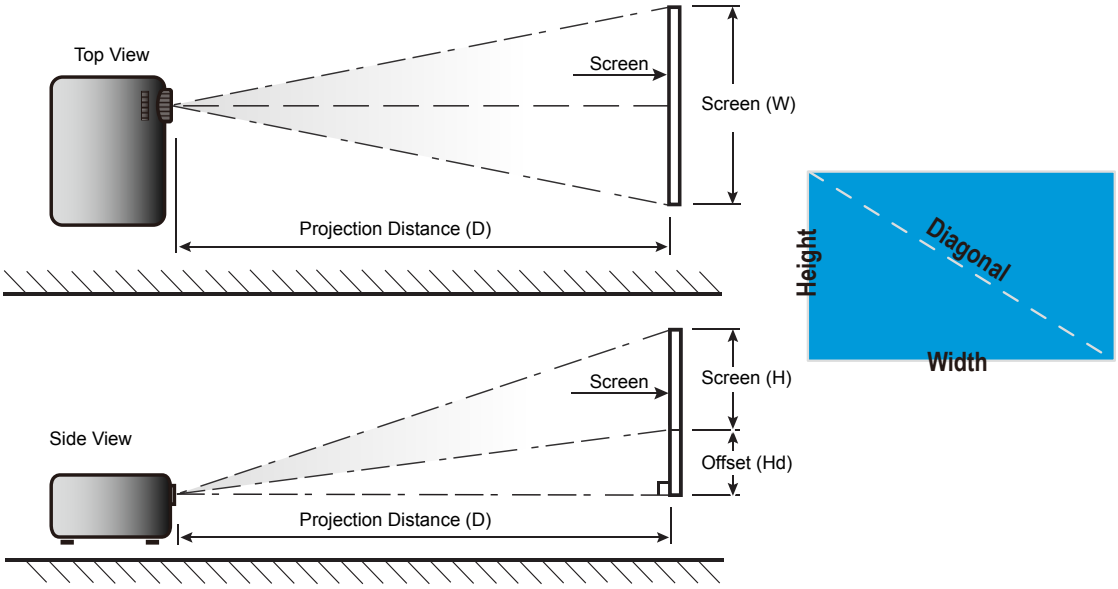

ADDITIONAL INFORMATION

Projector dimensions and ceiling mount installation

1. To prevent damage to your projector, please use the Optoma ceiling mount.
2. If you wish to use a third party ceiling mount kit, please ensure the screws used to attach a mount to the projector meet the following specifications:

- Screw type: M4*3
- Minimum screw length: 10mm

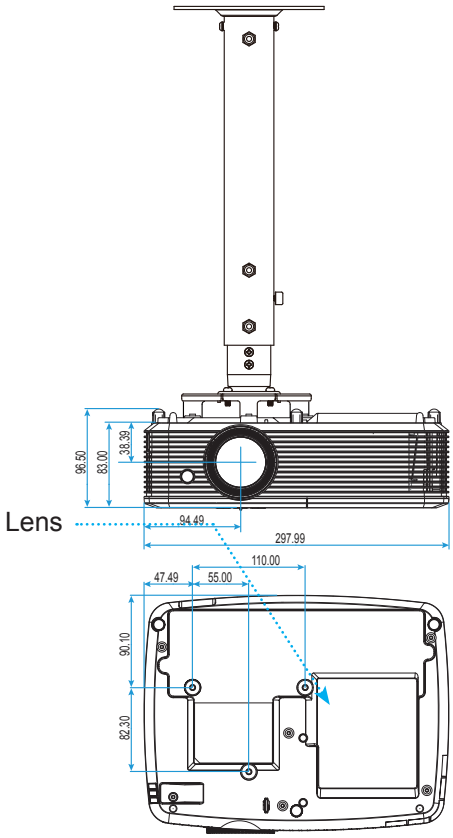

Unit: mm

Note: *Please note that damage resulting from incorrect installation will void the warranty.*

Warning:

- If you buy a ceiling mount from another company, please be sure to use the correct screw size. Screw size will vary depending on the thickness of the mounting plate.
- Be sure to keep at least 10 cm gap between the ceiling and the bottom of the projector.
- Avoid installing the projector near a heat source.

ADDITIONAL INFORMATION

IR remote codes

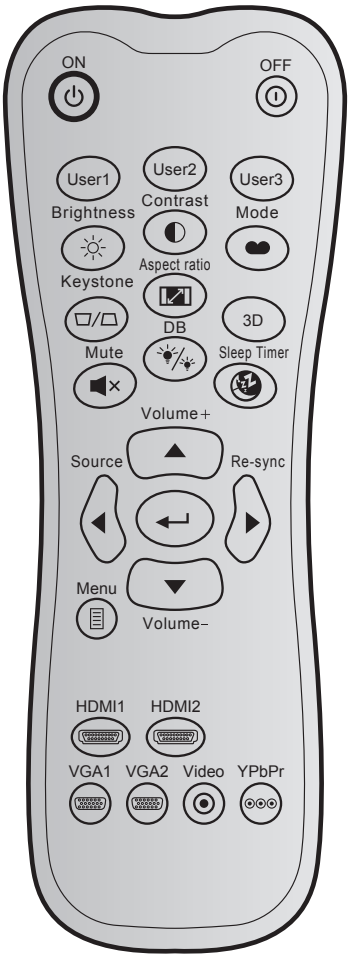

Key		Custom code		Data code	Printing-key definition	Description
		Byte 1	Byte 2	Byte 3		
Power on		32	CD	02	ON	Press to turn on the projector.
Power off		32	CD	2E	OFF	Press to turn off the projector.
User 1		32	CD	36	User1	User defined keys. Please see page *35* to setup.
User 2		32	CD	65	User2	
User 3		32	CD	66	User3	
Brightness		32	CD	41	Brightness	Adjust the brightness of the image.
Contrast		32	CD	42	Contrast	Control the degree of difference between the lightest and darkest parts of the picture.
Display mode		32	CD	05	Mode	Select a display mode for optimized settings for different applications. Please see page *29*.
Keystone		32	CD	07	Keystone	Adjust image distortion caused by tilting the projector.
Aspect ratio		32	CD	64	Aspect ratio	Press to change aspect ratio of a displayed image.
3D		32	CD	89	3D	Manually select a 3D mode that matches your 3D content.

ADDITIONAL INFORMATION

Key		Custom code		Data code	Printing-key definition	Description
		Byte 1	Byte 2	Byte 3		
Mute		32	CD	52	Mute	Momentarily turns off / on the audio.
DB (Dynamic Black)		32	CD	44	DB	Automatically adjusts the picture brightness to give optimum contrast performance.
Sleep timer		32	CD	63	Sleep Timer	Sets the countdown timer interval.
Volume +		32	CD	09	Volume +	Adjust to increase volume.
Four direction keys		32	CD	11	▲	Use ▲, ◄, ►, or ▼ to select items or make adjustments to your selection.
		32	CD	10	◄	
		32	CD	12	►	
		32	CD	14	▼	
Source		32	CD	18	Source	Press “Source” to select an input signal.
Enter key		32	CD	0F	↵	Confirm your item selection.
Re-sync		32	CD	04	Re-sync	Automatically synchronizes the projector to the input source.
Volume -		32	CD	0C	Volume -	Adjust to decrease volume.
Menu		32	CD	0E	Menu	Display or exit the on-screen display menus for projector.
HDMI 1		32	CD	16	HDMI1	Press “HDMI1” to choose source from HDMI 1 / MHL connector.
HDMI 2		32	CD	30	HDMI2	Press “HDMI2” to choose source from HDMI 2 connector.
VGA 1		32	CD	1B	VGA1	No function
VGA 2		32	CD	1E	VGA2	No function
Video		32	CD	1C	Video	No function
YPbPr		32	CD	17	YPbPr	No function

ADDITIONAL INFORMATION

IR remote control 2 codes

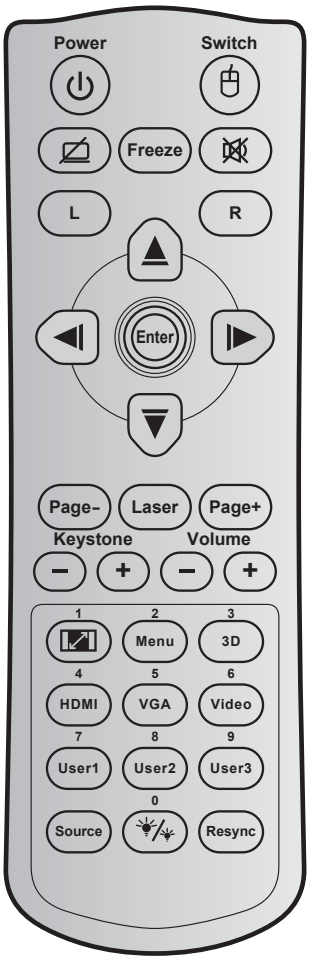

Key Legend		Address		Printing-key definition	Description
		Byte 3	Byte 4		
Power	⏻	81	7E	Power on/off	Press to turn on / off the projector.
Switch		3E	C1	Switch	Press to switch the USB mouse on / off.
Display blank / audio mute		8A	75		Press to hide / unhide the screen picture and turn off / on audio.
Freeze		8B	74	Freeze	Press to freeze the projector image.
Mute		92	6D		Press to momentarily turn off / on the audio.
Mouse left click	L	CB	34	L	Use as mouse left click.
Mouse right click	R	CC	33	R	Use as mouse right click.
Four directional select keys		C6	39	Up arrow	Use ▲ ▼ ◀ to select items or make adjustments to your selection.
		C8	37	Left arrow	
		C9	36	Right arrow	
		C7	38	Down arrow	
Enter		C5	3A	Enter	Confirm your item selection.
		CA	35		
Page -		C2	3D	Page-	Press to page down.

ADDITIONAL INFORMATION

Key Legend		Address		Printing-key definition	Description
		Byte 3	Byte 4		
Laser		N/A	N/A	Laser	Use as laser pointer.
Page +		C1	3E	Page+	Press to page up.
Keystone	⊖ ⊕	85	7A	Keystone+	Press to adjust image distortion caused by tilting the projector.
		84	7B	Keystone-	
Volume	⊖ ⊕	8C	73	Volume +	Press to adjust to increase / decrease the volume.
		8F	70	Volume -	
Aspect ratio / 1		98	67	/ 1	• Press to change aspect ratio of a displayed image. • Use as numeric keypad number "1".
Menu / 2		88	77	Menu/2	• Press to display or exit the on-screen display menus for projector. • Use as numeric keypad number "2".
3D / 3		93	6C	3D/3	• Press to manually select a 3D mode that matches your 3D content. • Use as numeric keypad number "3".
HDMI / 4		86	79	HDMI/4	• Press to choose HDMI source. • Use as numeric keypad number "4".
VGA / 5		D0	2F	VGA/5	• Press to choose VGA source. • Use as numeric keypad number "5".
Video / 6		D1	2E	Video/6	• Press to choose composite video source. • Use as numeric keypad number "6".
User1 / 7; User2 / 8; User3 / 9		D2	2D	User 1/7	• User defined keys. Please see page *35* to setup. • Use as numeric keypad numbers "7", "8", and "9" accordingly.
		D3	2C	User 2/8	
		D4	2B	User 3/9	
Source		C3	3C	Source	Press to select an input signal.
Brightness mode / 0		96	69	/ 0	• Press to automatically adjust the picture brightness to give an optimum contrast performance. • Use as numeric keypad number "0".
Re-sync		C4	3B	Re-Sync	Press to automatically synchronize the projector to the input source.

ADDITIONAL INFORMATION

Troubleshooting

If you experience a problem with your projector, please refer to the following information. If a problem persists, please contact your local reseller or service center.

Image problems

No image appears on-screen

- Ensure all the cables and power connections are correctly and securely connected as described in the "Installation" section.
- Ensure the pins of connectors are not crooked or broken.
- Check if the projection lamp has been securely installed. Please refer to the "Replacing the Lamp" section on pages *38-39*.
- Ensure that the "Mute" feature is not turned on.

Image is out of focus

- Adjust the Focus Ring on the projector lens. Please see page *16*.
- Make sure the projection screen is between the required distance from the projector. (Please refer to pages *42-43*).

The image is stretched when displaying 16:9 DVD title

- When you play anamorphic DVD or 16:9 DVD, the projector will show the best image in 16: 9 format on projector side.
- If you play the LBX format DVD title, please change the format as LBX in projector OSD.
- If you play 4:3 format DVD title, please change the format as 4:3 in projector OSD.
- Please setup the display format as 16:9 (wide) aspect ratio type on your DVD player.

Image is too small or too large

- Adjust the zoom lever on the top of the projector.
- Move the projector closer to or further from the screen.
- Press "Menu" on the projector panel, go to "Display-->Aspect Ratio". Try the different settings.

Image has slanted sides:

- If possible, reposition the projector so that it is centered on the screen and below the bottom of the screen.
- Use "Display-->Keystone" from the OSD to make an adjustment.

Image is reversed

- Select "Setup-->Projection" from the OSD and adjust the projection direction.

Blurry double image

- Press "3D" button and switch to "Off" to avoid normal 2D image is blurry double image.

ADDITIONAL INFORMATION

Two images, side-by-side format

- Press "3D" button and switch to "SBS" for input signal is HDMI 1.3 2D 1080i side-by-side.

Image does not display in 3D

- Check if the battery of 3D glasses is drained.
- Check if the 3D glasses is turned on.
- When the input signal is HDMI 1.3 2D (1080i side-by-side half), press "3D" button and switch to "SBS".

Other problems

The projector stops responding to all controls

- If possible, turn off the projector, then unplug the power cord and wait at least 20 seconds before reconnecting power.

Lamp burns out or makes a popping sound

- When the lamp reaches its end of life, it will burn out and may make a loud popping sound. If this happens, the projector will not turn on until the lamp module has been replaced. To replace the lamp, follow the procedures in the "Replacing the Lamp" section on pages *42-43*.

Remote control problems

If the remote control does not work

- Check the operating angle of the remote control is pointed within ±15° to the IR receiver on the projector.
- Make sure there are not any obstructions between the remote control and the projector. Move to within 7 m (23 ft) of the projector.
- Make sure batteries are inserted correctly.
- Replace batteries if they are exhausted.

ADDITIONAL INFORMATION

Warning indicators

When the warning indicators (see below) light up or flash, the projector will automatically shutdown:

- "LAMP" LED indicator is lit red and if "On/Standby" indicator flashes red.
- "TEMP" LED indicator is lit red and if "On/Standby" indicator flashes red. This indicates the projector has overheated. Under normal conditions, the project can be switched back on.
- "TEMP" LED indicator flashes red and if "On/Standby" indicator flashes red.

Unplug the power cord from the projector, wait for 30 seconds and try again. If the warning indicator light up or flash, please contact your nearest service center for assistance.

LED lightning messages

Message	Power LED (Red)	Power LED (Green or Blue)	Temp-LED (Red)	Lamp-LED (Red)
Standby state (Input power cord)	Steady light			
Power on (Warming)		Flashing (0.5 sec off / 0.5 sec on)		
Power on and Lamp lighting		Steady light		
Power off (Cooling)		Flashing (0.5 sec off / 0.5 sec light). Back to red steady light when cooling fan turns off.		
Quick Resume (100 secs)		Flashing (0.25 sec off / 0.25 sec light)		
Error (Lamp failure)	Flashing			Steady light
Error (Fan failure)	Flashing		Flashing	
Error (Over temp.)	Flashing		Steady light	
Standby State (Burn in mode)		Flashing		
Burnin (Warming)		Flashing		
Burnin (Cooling)		Flashing		

- Power off:

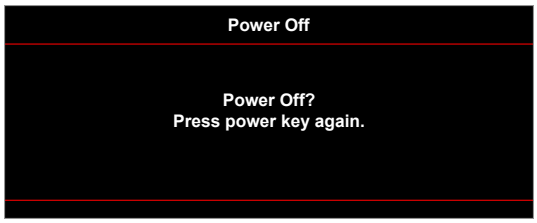

- Lamp warning:

ADDITIONAL INFORMATION

- Temperature warning:

- Fan failed:

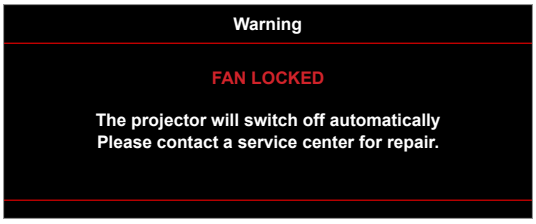

- Out of display range:

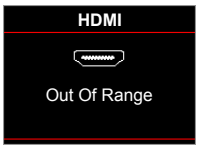

- Power down warning:

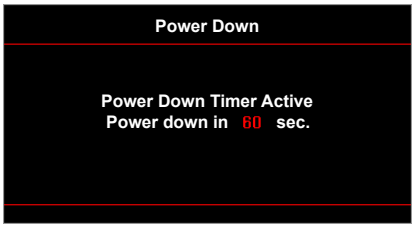

- Security timer alarm:

USING THE PROJECTOR

Specifications

Optical	Description
Maximum resolution	- Video timing up to 1080P - Graphics up to WUXGA@60Hz
Native resolution	1080p (1920x1080)
Lens	- Manual zoom and manual focus
Lamp life	**Philips E20.9i:** - Bright Mode (Normal Mode) 5000 Hours Standard @190W, 50% Survival Rate - STD Mode (ECO Mode) 6000 Hours Typical @160W, 50% Survival Rate - Dynamic mode 8000 Hours - Eco+ Mode 10000 Hours
Image size (diagonal)	41.8”~305” focus range optimized to the image size 60”
Projection distance	1.5m~10m focus range optimized to the image size 60”

Electrical	Description
Inputs	- HDMI 1.4a - MHL2.1
Outputs	- Audio 3.5mm - 3D Sync - 12V Trigger
Control	- USB type A for mouse / service
Color reproduction	1073.4 Million color
Scan rate	- Horizontal scan rate: 15.375~91.146 KHz - Vertical scan rate: 24~ 85 Hz (120Hz for 3D feature projector)
Built-in speaker	Yes, 10W
Power requirement	100 - 240V ±10%, AC 50/60Hz
Input current	2.7A

Mechanical	Description
Installation orientation	Front, Rear, Ceiling - Front, Rear - top
Dimensions	- 298 mm (W) x 230 mm (D) x 83 mm (H) (without feet) - 298 mm (W) x 230 mm (D) x 96.5 mm (H) (with feet)
Weight	2.5 ± 0.5 kg
Environmental conditions	Operating in 5 ~ 40°C , 10% to 85% humidity (non-condensing)

Note: *All specifications are subject to change without notice.*

USING THE PROJECTOR

Optoma global offices

For service or support, please contact your local office.

USA
3178 Laurelview Ct.
Fremont, CA 94538, USA
www.optomausa.com

888-289-6786
510-897-8601
services@optoma.com

Canada
3178 Laurelview Ct.
Fremont, CA 94538, USA
www.optomausa.com

888-289-6786
510-897-8601
services@optoma.com

Latin America
3178 Laurelview Ct.
Fremont, CA 94538, USA
www.optomausa.com

888-289-6786
510-897-8601
services@optoma.com

Europe
42 Caxton Way, The Watford Business Park
Watford, Hertfordshire,
WD18 8QZ, UK
www.optoma.eu
Service Tel : +44 (0)1923 691865

+44 (0) 1923 691 800
+44 (0) 1923 691 888
service@tsc-europe.com

Benelux BV
Randstad 22-123
1316 BW Almere
The Netherlands
www.optoma.nl

+31 (0) 36 820 0252
+31 (0) 36 548 9052

France
Bâtiment E
81-83 avenue Edouard Vaillant
92100 Boulogne Billancourt, France

+33 1 41 46 12 20
+33 1 41 46 94 35
savoptoma@optoma.fr

Spain
C/ José Hierro,36 Of. 1C
28522 Rivas VaciaMadrid,
Spain

+34 91 499 06 06
+34 91 670 08 32

Deutschland
Wiesenstrasse 21 W
D40549 Düsseldorf,
Germany

+49 (0) 211 506 6670
+49 (0) 211 506 66799
info@optoma.de

Scandinavia
Lerpeveien 25
3040 Drammen
Norway

+47 32 98 89 90
+47 32 98 89 99
info@optoma.no

PO.BOX 9515
3038 Drammen
Norway

Korea
WOOMI TECH.CO.,LTD.
4F, Minu Bldg.33-14, Kangnam-Ku,
Seoul,135-815, KOREA
korea.optoma.com

+82+2+34430004
+82+2+34430005

Japan
東京都足立区綾瀬3-25-18
株式会社オーエス
コンタクトセンター:0120-380-495

info@os-worldwide.com
www.os-worldwide.com

Taiwan
12F., No.213, Sec. 3, Beixin Rd.,
Xindian Dist., New Taipei City 231,
Taiwan, R.O.C.
www.optoma.com.tw

+886-2-8911-8600
+886-2-8911-6550
services@optoma.com.tw
asia.optoma.com

Hong Kong
Unit A, 27/F Dragon Centre,
79 Wing Hong Street,
Cheung Sha Wan,
Kowloon, Hong Kong

+852-2396-8968
+852-2370-1222
www.optoma.com.hk

China
5F, No. 1205, Kaixuan Rd.,
Changning District
Shanghai, 200052, China

+86-21-62947376
+86-21-62947375
www.optoma.com.cn