USA's primary source for projector lamps
myprojectorlamps

PROJECTOR OWNER'S MANUAL

Optoma

GT750-XL / GT750

Need a replacement lamp for this projector?

www.myprojectorlamps.com

Original manufacturer manual, provided unmodified as a courtesy of MyProjectorLamps.com.
All trademarks belong to their respective owners.

Table of Contents

Table of Contents 1
Usage Notice 2
Safety Information.....2
Precautions.....3
Eye Safety Warnings 5
Product Features 5
Introduction.....6
Package Overview.....6
Product Overview 7
Main Unit..... 7
Control Panel..... 8
Input/Output Connections..... 9
Remote Control..... 10
Installation 11
Connecting the Projector 11
Connect to Computer/Notebook 11
Connect to Video Sources 12
Powering On/Off the Projector.....13
Powering On the Projector..... 13
Powering Off the Projector..... 14
Warning Indicator..... 14
Adjusting the Projected Image.....15
Adjusting the Projector's Height 15
Adjusting the Projector's Focus 16
Adjusting Projection Image Size 16
User Controls 18
Control Panel & Remote Control 18
Control Panel..... 18
Remote Control..... 19
On-screen Display Menus 21
How to operate 21
Menu Tree..... 22
IMAGE 24
IMAGE | Advanced 26
DISPLAY..... 28
DISPLAY | 3D 30
SETUP..... 31
SETUP | Security..... 33
SETUP | Signal..... 35
SETUP | Audio Settings..... 36
OPTIONS..... 37
OPTIONS | Advanced..... 38
OPTIONS | Lamp Settings..... 39
Appendices.....40
Troubleshooting 40
Replacing the lamp 45
Compatibility Modes 47
Computer Compatibility 47
Video Compatibility..... 48
3D input Compatibility..... 49
RS232 Commands and Protocol Function List 50
RS232 Pin Assignments 50
RS232 Protocol Function List 51
Ceiling Mount Installation.....54
Optoma Global Offices 55
Regulation & Safety Notices.....57

Safety Information

	The lightning flash with arrow head within an equilateral triangle is intended to alert the user to the presence of uninsulated “dangerous voltage” within the product’s enclosure that may be of sufficient magnitude to constitute a risk of electric shock to persons.
	The exclamation point within an equilateral triangle is intended to alert the user to the presence of important operating and maintenance (servicing) instructions in the literature accompanying the appliance.

WARNING: TO REDUCE THE RISK OF FIRE OR ELECTRIC SHOCK, DO NOT EXPOSE THIS APPLIANCE TO RAIN OR MOISTURE. DANGEROUS HIGH VOLTAGES ARE PRESENT INSIDE THE ENCLOSURE. DO NOT OPEN THE CABINET. REFER SERVICING TO QUALIFIED PERSONNEL ONLY.

Class B emissions limits

This Class B digital apparatus meets all requirements of the Canadian Interference-Causing Equipment Regulations.

Important Safety Instruction

1. Do not block any ventilation openings. To ensure reliable operation of the projector and to protect from over heating, it is recommended to install the projector in a location that does not block ventilation. As an example, do not place the projector on a crowded coffee table, sofa, bed, etc. Do not put the projector in an enclosure such as a book case or a cabinet that restricts air flow.
2. Do not use the projector near water or moisture. To reduce the risk of fire and/or electric shock, do not expose the projector to rain or moisture.
3. Do not install near heat sources such as radiators, heaters, stoves or any other apparatus such as amplifiers that emits heat.
4. Clean only with dry cloth.
5. Only use attachments/accessories specified by the manufacturer.
6. Do not use the unit if it has been physically damaged or abused. Physical damage/abuse would be (but not limited to):
   - Unit has been dropped.
   - Power supply cord or plug has been damaged.
   - Liquid has been spilled on to the projector.
   - Projector has been exposed to rain or moisture.
   - Something has fallen in the projector or something is loose inside.

   Do not attempt to service the unit yourself. Opening or removing covers may expose you to dangerous voltages or other hazards. Please call Optoma before you send the unit for repair.
7. Do not let objects or liquids enter the projector. They may touch dangerous voltage points and short out parts that could result in fire or electric shock.
8. See projector enclosure for safety related markings.
9. The unit should only be repaired by appropriate service personnel.

Precautions

Please follow all warnings, precautions and maintenance as recommended in this user's guide.

- Warning- Do not look into the projector's lens when the lamp is on. The bright light may hurt and damage your eyes.
- Warning- To reduce the risk of fire or electric shock, do not expose this projector to rain or moisture.
- Warning- Please do not open or disassemble the projector as this may cause electric shock.
- Warning- When replacing the lamp, please allow the unit to cool down. Follow instructions as described on pages 44-45.
- Warning- This projector will detect the life of the lamp itself. Please be sure to change the lamp when it shows warning messages.
- Warning- Reset the "Lamp Reset" function from the on-screen display "OPTIONS | Lamp Settings" menu after replacing the lamp module (refer to page 38).
- Warning- When switching the projector off, please ensure the cooling cycle has been completed before disconnecting power. Allow 90 seconds for the projector to cool down.
- Warning- Do not use lens cap when projector is in operation.
- Warning- When the lamp is approaching the end of its lifetime, the message "Lamp Warning: Lamp life exceeded." will show on the screen. Please contact your local reseller or service center to change the lamp as soon as possible.
- Warning- Do not look into or point the laser pointer on your remote control into your or someone's eyes. Laser pointer can cause permanent damage to eyesight.

Usage Notice

Do:

- Turn off and unplug the power plug from the AC outlet before cleaning the product.
- Use a soft dry cloth with mild detergent to clean the display housing.
- Disconnect the power plug from AC outlet if the product is not being used for a long period of time.

Do not:

- Block the slots and openings on the unit provided for ventilation.
- Use abrasive cleaners, waxes or solvents to clean the unit.
- Use under the following conditions:
  - In extremely hot, cold or humid environments.
    - Ensure that the ambient room temperature is within 5 - 35°C.
    - Relative Humidity is 5 - 35°C, 80% (Max.), non-condensing.
  - In areas susceptible to excessive dust and dirt.
  - Near any appliance generating a strong magnetic field.
  - In direct sunlight.

Eye Safety Warnings

- Avoid staring/facing directly into the projector beam at all times. Keep your back to the beam as much as possible.
- When projector is used in a classroom, adequately supervise students when they are asked to point out something on the screen.
- In order to minimize the lamp power, use room blinds to reduce ambient light levels.

Product Features

- WXGA (1280x800) Native resolution
- HD compatible – 1080p supported
- BrilliantColor™ Technology
- Security Bar and Kensington Lock
- RS232 control
- Rapid shutdown
- Built-in speaker

Package Overview

Unpack and inspect the box contents to ensure all parts listed below are in the box. If something is missing, please contact your nearest customer service center.

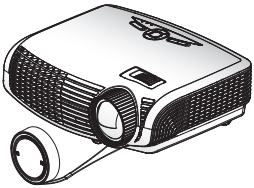

Projector with lens cap

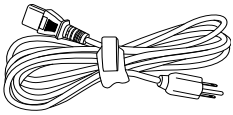

Power Cord 1.8m

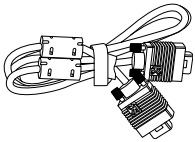

VGA Cable 1.8m

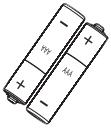

2 × AAA Batteries

IR Remote Control

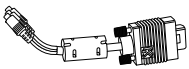

VGA/RCA Adaptor

NOTE

- Due to different applications in each Country, some regions may have different accessories.

Documentation :

- ☑ User's Manual
- ☑ Warranty Card
- ☑ Quick Start Card
- ☑ WEEE Card (for EMEA only)

Product Overview

Main Unit

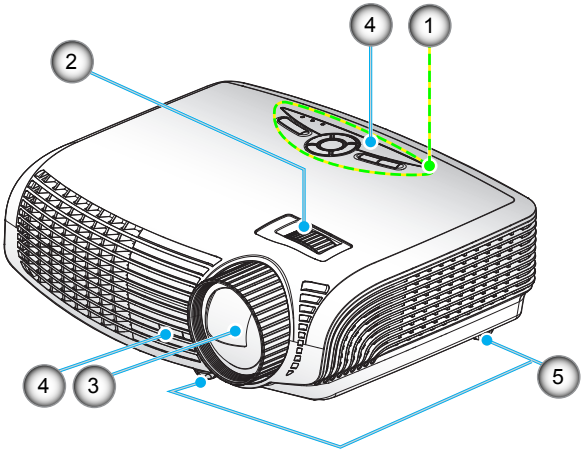

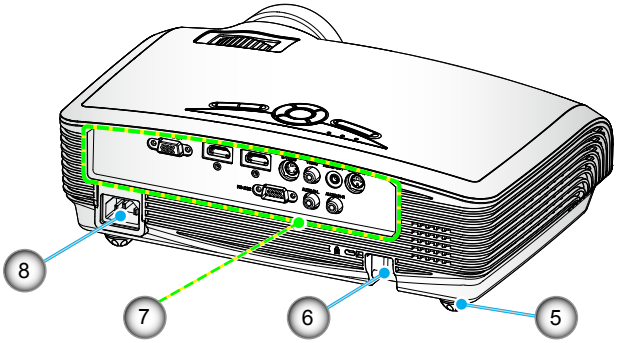

1. Control Panel
2. Focus Ring
3. Lens
4. IR Receivers
5. Tilt-Adjustment Feet
6. Security Bar
7. Input / Output Connections
8. Power Socket

Control Panel

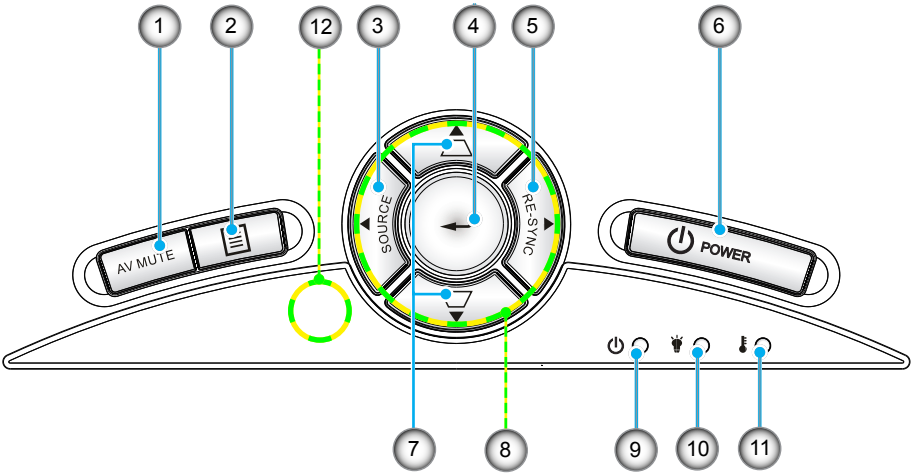

1. AV Mute
2. Menu
3. Source
4. Enter
5. Re-Sync
6. Power
7. Keystone Correction
8. Four Directional Select Keys
9. On/Standby LED
10. Lamp LED
11. Temp LED
12. IR Receiver

Input/Output Connections

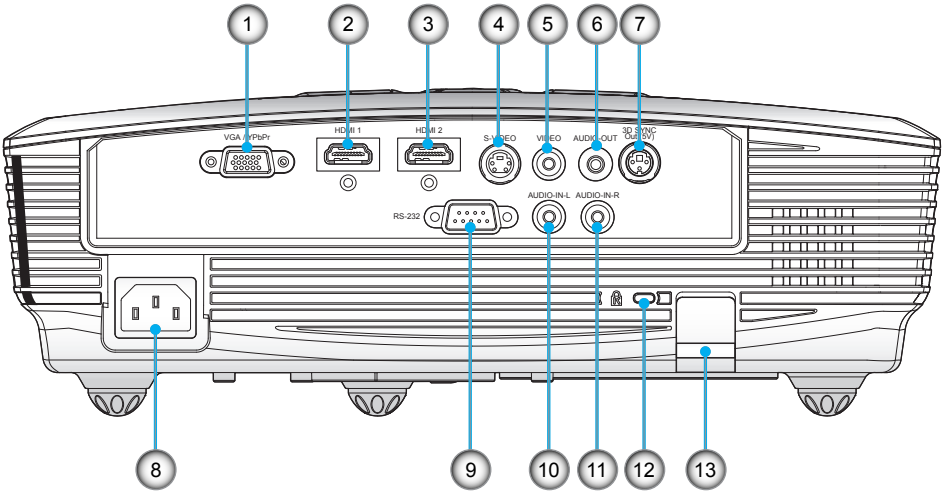

1. VGA/YPbPr/ Connector
   (PC Analog Signal/Component Video Input/HDTV/YPbPr)
2. HDMI 1 Connector
3. HDMI 2 Connector
4. S-Video Input Connector
5. Composite Video Input Connector
6. Audio Output Connector (3.5mm Mini Jack)
7. 3D Sync Out (5V)
8. Power Socket
9. RS-232 Connector (9-pin)
10. Left RCA Audio Input Connector
11. Right RCA Audio Input Connector
12. Kensington™ Lock Port
13. Security Bar

Remote Control

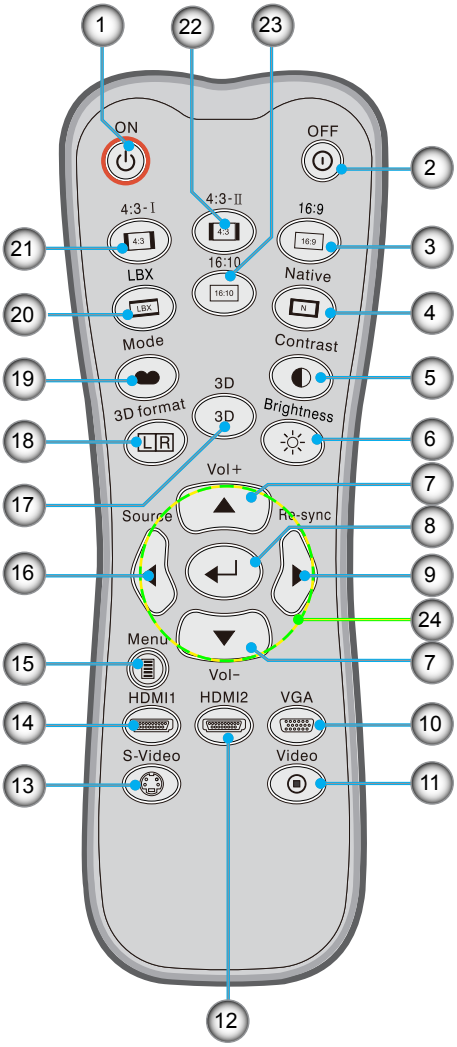

1. Power On
2. Power Off
3. 16:9
4. Native
5. Contrast
6. Brightness
7. Vol+/-
8. Enter
9. Re-Sync
10. VGA Source
11. Video Source
12. HDMI 2 Source
13. S-Video Source
14. HDMI 1 Source
15. Menu
16. Source
17. 3D
18. 3D format
19. Mode
20. LBX
21. 4:3-I
22. 4:3-II
23. 16:10
24. Four Directional Select Keys

Connecting the Projector

Connect to Computer/Notebook

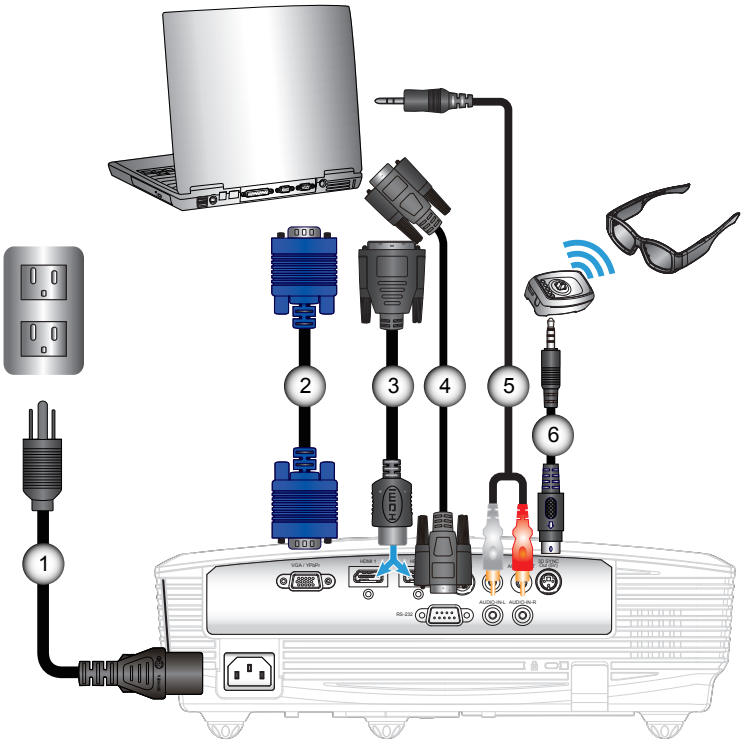

- Due to the difference in applications for each country, some regions may have different accessories.
- (*) Optional accessory

1.....Power Cord
2.....*DVI/HDMI Cable
3.....VGA Cable
4.....*RS232 Cable
5.....*Audio Input Cable
6.....*Emitter cable

Connect to Video Sources

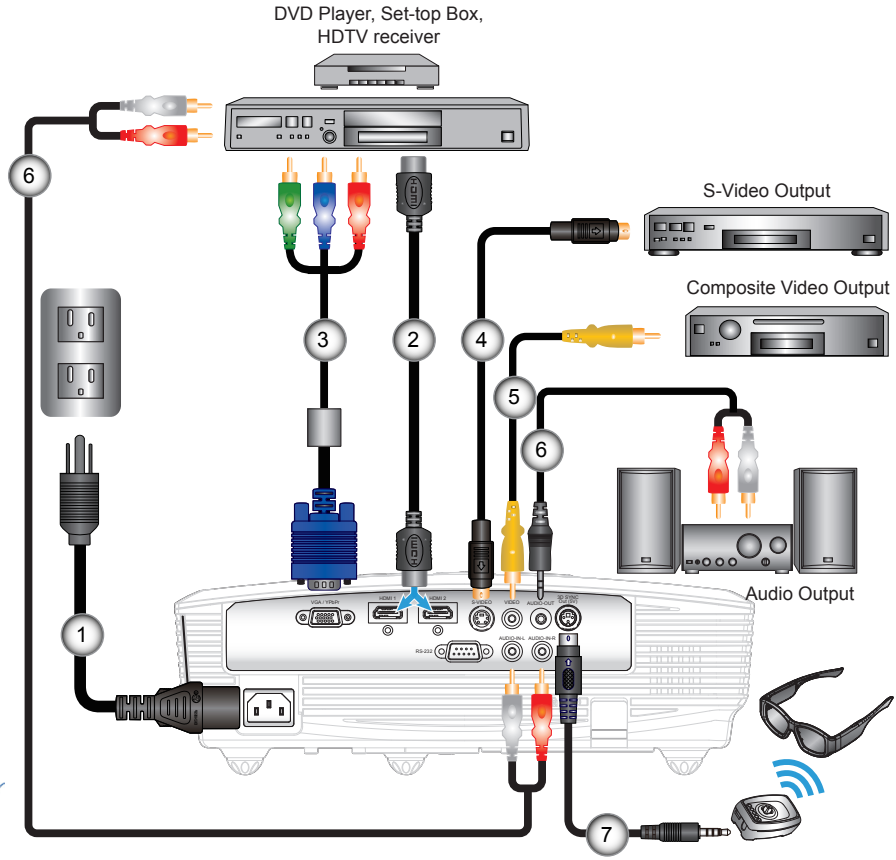

NOTE

- Due to the difference in applications for each country, some regions may have different accessories.
- (*) Optional accessory

1.....Power Cord
2.....*HDMI Cable
3.....VGA/RCA Adaptor
4.....*S-Video Cable
5.....*Composite Video Cable
6.....*Audio Cable Jack/RCA
7.....*Emitter cable

Powering On/Off the Projector

Powering On the Projector

1. Remove the lens cap. ❶
2. Securely connect the power cord and signal cable. When connected, the ON/STANDBY LED will turn Amber.
3. Turn on the lamp by pressing "⏻" button either on the top of the projector or on the remote. The ON/STANDBY LED will now turn Green. ❷

   The startup screen will display in approximately 10 seconds. The first time you use the projector, you will be asked to select the preferred language and power saving mode.

4. Turn on and connect the source that you want to display on the screen (computer, notebook, video player, etc). The projector will detect the source automatically. If not, push menu button and go to "OPTIONS".
   Make sure that the "Source Lock" has been set to "Off".

❖ If you connect multiple sources at the same time, press the "SOURCE" button on the control panel or direct source keys on the remote control to switch between inputs.

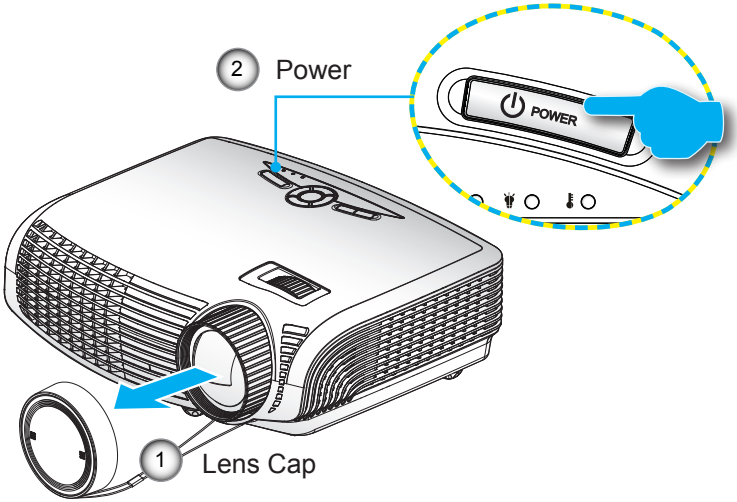

NOTE

❖ Turn on the projector first and then select the signal sources.

Powering Off the Projector

1. Press the "⏻" button on the remote control or on the control panel to turn off the projector. The following message will be displayed on the screen.

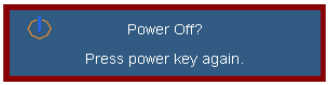

   Press the "⏻" button again to confirm otherwise the message will disappear after 15 seconds. When you press the "⏻" button for the second time, the projector will display countdown timer and will shut down.

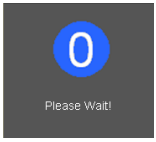

2. The cooling fans continue to operate for about 10 seconds for cooling cycle and the ON/STANDBY LED will Flash Green. When the ON/STANDBY LED lights solid Amber, the projector has entered standby mode.

   If you wish to turn the projector back on, you must wait until the projector has completed the cooling cycle and has entered standby mode. Once in standby mode, simply press "⏻" button to restart the projector.
3. Disconnect the power cord from the electrical outlet and the projector.
4. Do not turn on the projector immediately following a power off procedure.

Warning Indicator

When the warning indicators (see below) come on, the projector will automatically shutdown:

- "LAMP" LED indicator is lit red and if "On/Standby" indicator flashes amber.
- "TEMP" LED indicator is lit red and if "On/Standby" indicator flashes amber. This indicates the projector has overheated. Under normal conditions, the projector can be switched back on.
- "TEMP" LED indicator flashes red and if "On/Standby" indicator flashes amber.

Unplug the power cord from the projector, wait for 30 seconds and try again. If the warning indicator light up again, please contact your nearest service center for assistance.

NOTE

- Contact the nearest service center if the projector displays these symptoms. See pages 54-55 for more information.

Adjusting the Projected Image

Adjusting the Projector's Height

The projector is equipped with elevator feet for adjusting the image height.

1. Locate the adjustable foot you wish to modify on the underside of the projector.
2. Rotate the adjustable ring clockwise to raise the projector or counter clockwise to lower it. Repeat with the remaining feet as needed.

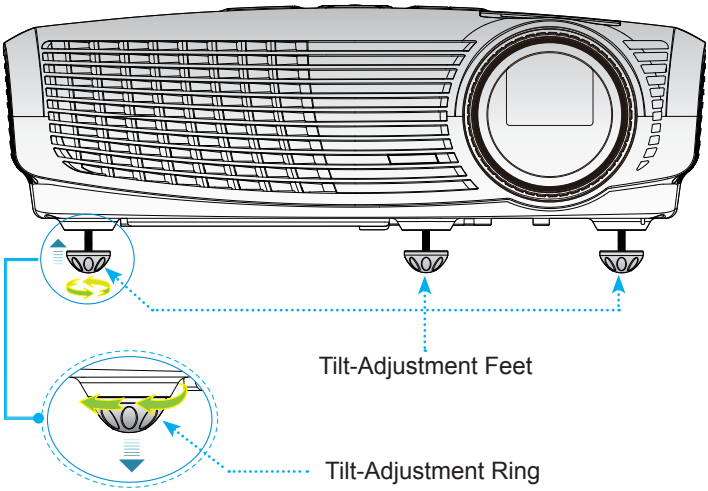

Adjusting the Projector's Focus

To focus the image, rotate the focus ring until the image is clear.

- WXGA series: The projector will focus at distances from 1.64 to 16.40 feet (0.5 to 5.0 meters).

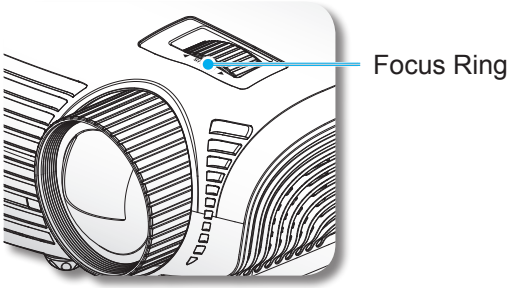

Adjusting Projection Image Size

- WXGA series: Projection Image Size from 34.0" to 322.0" (0.8 to 8.2 meters).

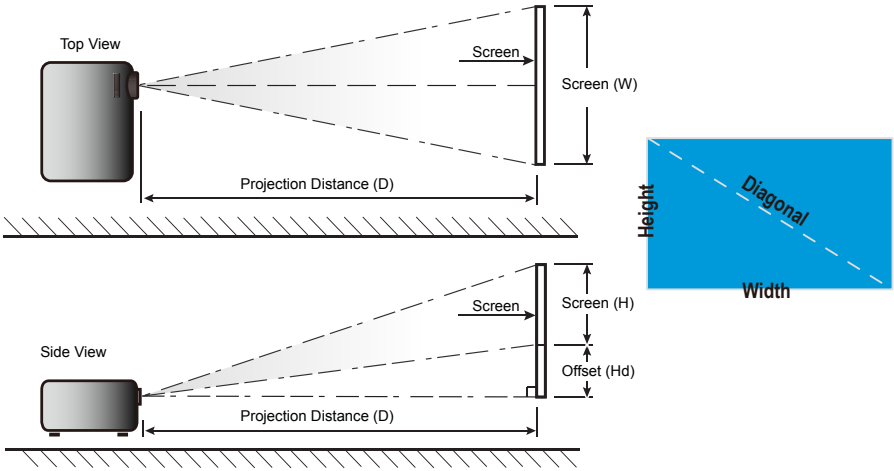

WXGA

Diagonal length (inch) size of 16:10 Screen	Screen Size W x H				Projection Distance (D)		Offset (Hd)	
	(m)		(inch)		(m)	(feet)		
	Width	Height	Width	Height	wide	wide	(m)	(feet)
36.30	0.78	0.49	30.78	19.24	0.56	-	0.06	0.20
44.00	0.95	0.59	37.31	23.32	0.68	2.24	0.07	0.24
60.00	1.29	0.81	50.87	31.80	0.93	3.05	0.10	0.33
70.00	1.51	0.94	59.35	37.10	1.09	3.56	0.12	0.38
80.00	1.72	1.08	67.83	42.40	1.24	4.07	0.13	0.44
90.00	1.94	1.21	76.31	47.69	1.40	4.58	0.15	0.49
100.00	2.15	1.35	84.79	52.99	1.55	5.09	0.17	0.55
120.00	2.58	1.62	101.75	63.59	1.86	6.10	0.20	0.66
150.00	3.23	2.02	127.19	79.49	2.33	7.63	0.25	0.82
180.00	3.88	2.42	152.62	95.39	2.79	9.16	0.30	0.99
250.00	5.38	3.37	211.98	132.49	3.88	12.72	0.42	1.37
302.00	6.50	4.07	256.07	160.04	4.68	15.36	0.50	1.65
362.00	7.80	4.87	306.94	191.84	5.61	18.41	0.60	1.98

❖ This table is for user's reference only.

Control Panel & Remote Control

Control Panel

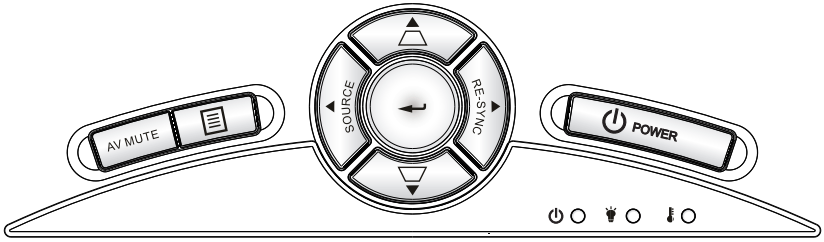

Using the Control Panel		
POWER	⏻	Refer to the “Power On/Off the Projector” section on pages 13-14.
RE-SYNC		Automatically synchronize the projector to the input source.
Enter	↵	Confirm your item selection.
SOURCE		Press “SOURCE” to select an input signal.
Menu	☰	Press “Menu” to launch the on-screen display (OSD) menu. To exit OSD, Press “Menu” again.
AV MUTE		Momentarily turns off/on the audio and video.
Four Directional Select Keys		Use ▲ ▼ ◀ ▶ to select items or make adjustments to your selection.
Keystone		Use ⏢ ⏢ to adjust image distortion caused by tilting the projector. (±40 degrees)
Lamp LED	○	Indicate the projector’s lamp status.
Temp LED	○	Indicate the projector’s temperature status.
ON/STAND-BY LED	⏻ ○	Indicate the projector’s status.

Remote Control

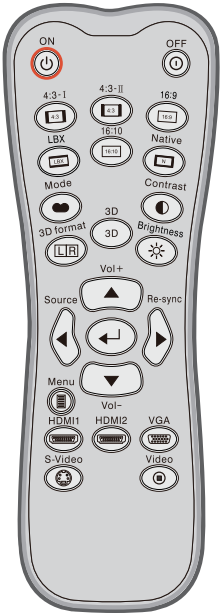

Using the Remote Control

Power On	⏻	Refer to the “Power On” section on page 13.
Power Off	⏻	Refer to the “Power On/Off the Projector” section on page 14.
Mode		Select the display mode from Cinema, Bright, Photo, Reference and User.
4:3-I	4:3	Scale the image at a 4:3-I (960x720) aspect ratio.
4:3-II	4:3	Scale the image at a 4:3-II (1066x800) aspect ratio.
16:9	16:9	Scale the image at a 16:9 (1280x720) aspect ratio.
16:10	16:10	Scale the image at a 16:10 (1280x800) aspect ratio.
LBX	LBX	Enable the viewing of the letterboxed nonan-amorphically enhanced movie at full screen width. Part of the original image will be lost if the image aspect ratio is less than 2.35:1.
Native	N	The input source will be displayed without scaling.
Brightness	☼	Adjust the brightness of the image.
Contrast	◐	Control the degree of difference between the lightest and darkest parts of the picture.
3D Format	L R	For Broadcast 3D signals in “3D format”.
3D	3D	Press the “3D” to turn the 3D OSD menu on/ off.
Vol+ / Vol -	▲ ▼	Adjust to increase / decrease the volume.

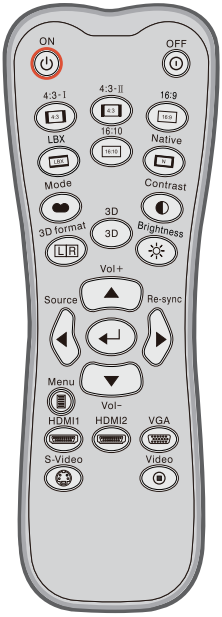

Using the Remote Control

Enter		Confirm your item selection.
Source		Press “Source” to select an input signal.
Re-sync		Automatically synchronizes the projector to the input source.
Menu		Display or exit the on-screen display menus for projector.
HDMI 1		Press “HDMI 1” to choose source from HDMI 1 connector.
HDMI 2		Press “HDMI 2” to choose source from HDMI 2 connector.
VGA		Press “VGA” to choose source from VGA/SCART/YPbPr connector.
S-Video		Press “S-Video” to choose S-Video source.
Video		Press “Video” to choose Composite video source.
Four Directional Select Keys		Use ▲ ▼ ◀ ▶ to select items or make adjustments to your selection.

On-screen Display Menus

The Projector has multilingual On-screen Display menus that allow you to make image adjustments and change a variety of settings. The projector will automatically detect the source.

How to operate

1. To open the OSD menu, press “Menu” on the Remote Control or Projector Keypad.
2 When OSD is displayed, use ◀ ▶ keys to select any item in the main menu. While making a selection on a particular page, press ▼ or “Enter” key to enter sub menu.
3. Use ▲ ▼ keys to select the desired item and adjust the settings using ◀ ▶ key.
4. Select the next item to be adjusted in the sub menu and adjust as described above.
5. Press “Enter” to confirm, and the screen will return to the main menu.
6. To exit, press “MENU” again. The OSD menu will close and the projector will automatically save the new settings.

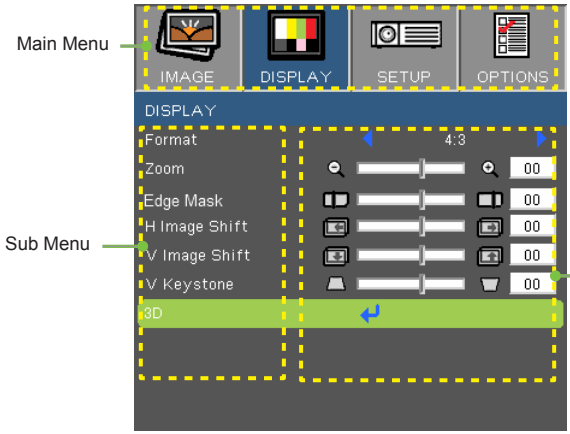

Menu Tree

Main Menu	Sub Menu		Settings
Image	Display Mode		Cinema / Bright / Presentation / Game / Blackboard / Classroom / 3D / User
	Brightness		-50 ~ +50
	Contrast		-50 ~ +50
	Sharpness		1~15
	#1 Color		-50 ~ +50
	#1 Tint		-50 ~ +50
	Advanced	Gamma	Film / Video / Graphics / Standard
		BrilliantColor™	0~10
		Color Temp.	Warm / Medium / Cold
		Color	Red Gain / Green Gain / Blue Gain / Red Bias / Green Bias / Blue Bias / Cyan / Magenta / Yellow / Reset / Exit
		Color Space	AUTO / RGB / YUV
			#2 AUTO / RGB (0-255) / RGB (16-235) / YUV
		Input Source	VGA / S-Video / Video / HDMI 1 / HDMI 2
		Exit	
Display	Format		4:3-I / 4:3-II / 16:9 / 16:10 / LBX / Native / AUTO
	Edge Mask		0~10
	Zoom		-5 ~ +25
	V Image Shift		-50 ~ +50
	V Keystone		-40 ~ +40
	3D	3D Mode	DLP-Link / VESA 3D
		3D -> 2D	3D / L / R
		3D Format	Auto / SBS / Top and Bottom / Frame Sequential
		#3 3D Sync. Invert	On / Off
		Exit	
Setup	Language		**English / Deutsch / Français / Italiano / Español / Português / Svenska / Nederlands / Norsk/Dansk / Polski / Suomi / Русский / ελληνικά / Magyar / Čeština / فارسى / عربي /繁體中文 / 简体中文 / 日本語 /한국어 / ไทย / Türkçe**
	Projection		
	Menu Location		
	#4 Signal	Automatic	Enable / Disable
		Frequency (VGA)	-5~5
		Phase (VGA)	0~63
		H. Position (VGA)	-5~5
		V. Position (VGA)	-5~5
		Exit	

Main Menu	Sub Menu		Settings
Setup	Security	Security	On / Off
		Security Timer	Month / Day / Hour
		Change Password	
		Exit	
	Projector ID		0~99
	Audio Settings	Internal Speaker	On / Off
		Mute	On / Off
		Volume	0~10
		Audio Input	Default / Audio / HDMI
		Exit	
Options	Source Lock		On / Off
	High Altitude		On / Off
	Information Hide		On / Off
	Keypad Lock		On / Off
	Background Color		Black / Red / Blue / Green / White
	Test Pattern		None / Grid / White Pattern
	Advanced	Direct Power On	On / Off
		Auto Power Off (min.)	0~180
		Sleep Timer (min.)	0~995
		Exit	
	Lamp Settings	Lamp Hours	
		Lamp Reminder	On / Off
		Brightness Mode	STD / Bright
		Lamp Reset	Yes / No
		Exit	
	Reset		Yes / No

NOTE

- Please note that the on-screen display (OSD) menus vary according to the signal type selected and the projector model you are using.
- (#1) “Color” and “Tint” are only supported in Video mode.
- (#2) For HDMI source only.
- (#3) “3D Sync Invert” is only available when 3D is enabled.
- (#4) “Signal” is only supported in Analog VGA (RGB) signal.

IMAGE

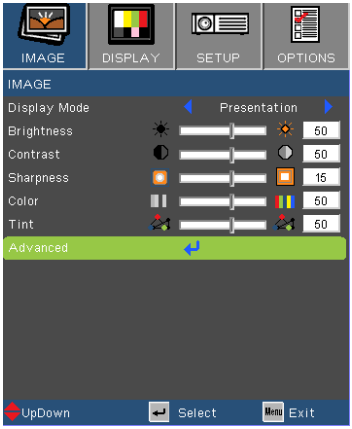

Display Mode

There are many factory presets optimized for various types of images.

- Presentation: Good color and brightness from PC input.
- Bright: Maximum brightness from PC input.
- Cinema: For home theater.
- Game: For game mode.
- Blackboard: This mode should be selected to achieve optimum color settings when projecting onto a blackboard (green).
- Classroom: This mode is recommended for projecting in a classroom.
- User: User's settings.
- 3D: Recommended setting for 3D mode enabled. Any further adjustments by the user in 3D will be saved in this mode for further use.

Contrast

The contrast controls the degree of difference between the lightest and darkest parts of the picture.

- Press the ◀ to decrease the contrast.
- Press the ▶ to increase the contrast.

Brightness

Adjust the brightness of the image.

- Press the ◀ to darken image.
- Press the ▶ to lighten the image.

Color

Adjust a video image from black and white to fully saturated color.

- Press the ◀ to decrease the amount of saturation in the image.
- Press the ▶ to increase the amount of saturation in the image.

Tint

Adjust the color balance of red and green.

- Press the ◀ to increase the amount of green in the image.
- Press the ▶ to increase the amount of red in the image.

Sharpness

Adjust the sharpness of the image.

- Press the ◀ to decrease the sharpness.
- Press the ▶ to increase the sharpness.

NOTE

- "Color" and "Tint" functions are only supported under Video mode.

IMAGE | Advanced

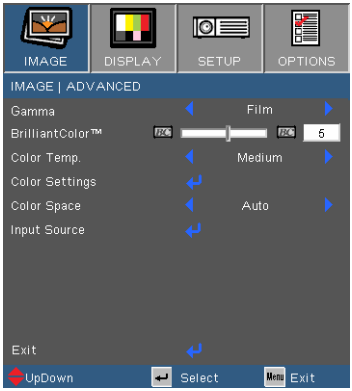

BrilliantColor™

This adjustable item utilizes a new color-processing algorithm and system level enhancements to enable higher brightness while providing true, more vibrant colors in picture. The range is from “0” to “10”. If you prefer a stronger enhanced image, adjust toward the maximum setting. For a smoother, more natural image, adjust toward the minimum setting.

Gamma

This allows you to set up gamma curve type. After the initial setup and fi ne tuning is completed, utilize the Gamma Adjustment steps to optimize your image output.

- Film: for home theater.
- Video: for video or TV source.
- Graphics: for image source.
- Standard: for standardized setting.

Color Temp

If set to cold temperature, the image looks more blue. (cold image)

If set to warm temperature, the image looks more red.

(warm image)

Color Settings

Press ↵ into the next menu as below and then use ▲ or ▼ to select item.

- Red/Green/Blue/Cyan/Magenta/Yellow: Use ◀ or ▶ to select Red, Green, Blue, Cyan, Magenta and Yellow Colors.
- Reset: Choose “Yes” to return the factory default settings for color adjustments.

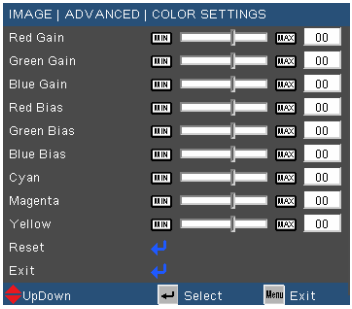

NOTE

❖ (*) For HDMI only.

Color Space

Select an appropriate color matrix type from AUTO, RGB, RGB(0-255)(*), RGB(16-235)(*) or YUV.

Input Source

Use this option to enable / disable input sources. Press ↵ to enter the sub menu and select which sources you require. Press “Enter” to finalize the selection. The projector will not search for inputs that are not selected.

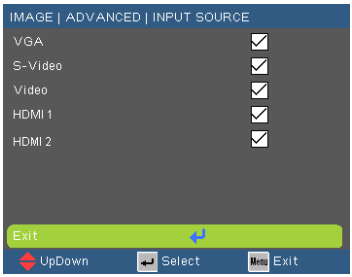

DISPLAY

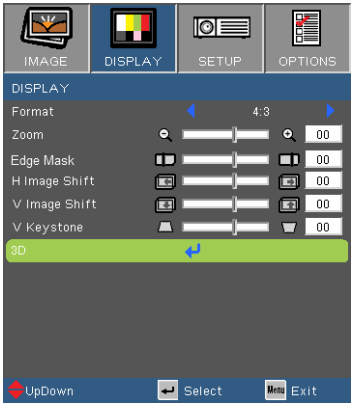

Format

Use this function to choose your desired aspect ratio.

- 4:3-I: This format is for 4×3-I input sources.
- 4:3-II: This format is for 4×3-II input sources.
- 16:9: This format is for 16×9 input sources, like HDTV and DVD enhanced for Wide screen TV.
- 16:10: This format is for 16×10 input sources, like widescreen laptops.
- LBX: This format is for non-16x9, letterbox source and for users who use external 16x9 lens to display 2.35:1 aspect ratio using full resolution.
- Native: This format displays the original image without any scaling.
- AUTO: Automatically selects the appropriate display format.

Aspect ratio (source detected)	Resize image WXGA model
4:3-I	960 x 720 center
4:3-II	1066 x 800 center
16:9	1280 x 720 center
16:10	1280 x 800 center
LBX	1280 x 960 center, then get the central 1280 x 800 image to display
Native	Resize image of native change to above description not pixels resolution.

Note

- Each I/O has different setting of “Edge Mask”.
- “Edge Mask” and “Zoom” can’t work at same time.

Detail informations about LBX mode:

1. Some Letter-Box DVDs are not enhanced for 16x9 TVs. In this situation, the image will not look right when displayed in 16:9 mode.

   In this situation, please try to using the 4:3 mode to view the DVD.

   If the content is not 4:3, there will be black bars around the image in 16:9 display. For this type of content, you can use LBX mode to fill the image on the 16:9 display.

2. If you use an external anamorphic lens, this LBX mode also allows you to watch a 2.35:1 content (include Anamorphic DVD and HDTV film source) that support anamorphic wide is enhanced for 16x9 Display in a wide 2.35:1 image.

   In this case, there are no black bars. Lamp power and vertical resolution are fully utilized.

Zoom

- Press the ◀ to reduce the size of an image.
- Press the ▶ to magnify an image on the projection screen.

Edge Mask

Edge mask function removes the noise in a video image. Edge mask the image to remove video encoding noise on the edge of video source.

V Image Shift

Shift the projected image position vertically.

V Keystone

Press the ◀ or ▶ to adjust image distortion vertically. If the image looks trapezoidal, this option can help make the image rectangular.

DISPLAY | 3D

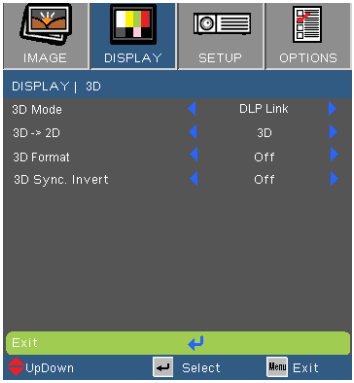

3D Mode

- DLP Link: Select “DLP Link” to use optimized settings for DLP Link 3D images. (For DLP glasses, please refer to page 15).
- VESA 3D: Select “VESA 3D” to use optimized setting for VESA 3D images. (For 3D emitter, please refer to page 13).

3D -> 2D

- 3D: Display left and right frames of 3D content.
- L (Left): Display the left frame of 3D content.
- R (Right): Display the right frame of 3D content.

3D Format

- Auto : When a 3D identification signal is detected, the 3D format is selected automatically.
- SBS: Display 3D signal in “Side-by-Side” format.
- Top and Bottom: Display 3D signal in “Top and Bottom” format.
- Frame Sequential: Display 3D signal in “Frame Sequential” format.

3D Sync. Invert

- Press the “On” to invert left and right frame contents.
- Press the “Off” for default frame contents.

NOTE

- “3D sync. Invert” function wouldn’t save the setting. It will set to “Off” when powers on and changes source.
- 3D Format is only supported on 3D Timing on page 49.

SETUP

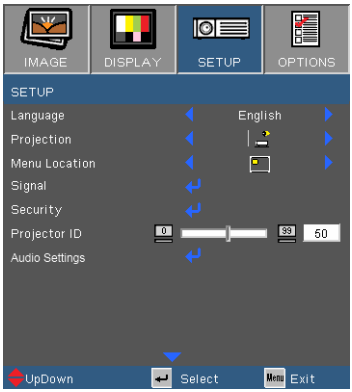

Language

Choose the multilingual OSD menu. Press ◀ or ▶ into the sub menu and then use the ▲ or ▼ key to select your preferred language. Press “Enter” to finalize the selection.

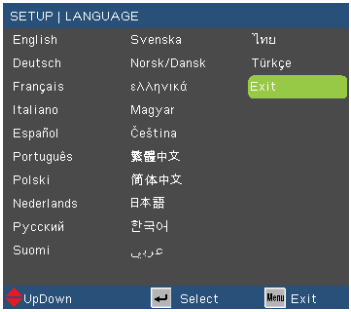

NOTE

❖ Rear-Desktop and Rear-Ceiling are to be used with a translucent screen.

Projection

Front-Desktop

This is the default selection. The image is projected straight on the screen.

Rear-Desktop

When selected, the image will appear reversed.

Front-Ceiling

When selected, the image will turn upside down.

Rear-Ceiling

When selected, the image will appear reversed in upside down position.

Menu Location

Choose the menu location on the display screen.

Projector ID

ID definition can be set up by menu (range 0~99), and allow user control an individual projector by RS232. Refer to pages 50~53 for the complete list of RS232 commands.

SETUP | Security

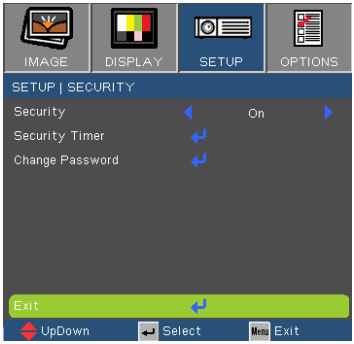

Security

- On: Choose “On” to use security verification when the turning on the projector.
- Off: Choose “Off” to be able to switch on the projector without password verification.

Security Timer

Can be select the time (Month/Day/Hour) function to set the number of hours the projector can be used. Once this time has elapsed you will be requested to enter your password again.

Change Password

- First time:
  1. Press “↵” to set the password.
  2. The password has to be 4 digits.
  3. Use number button on the remote to enter your new password and then press “↵” key to confirm your password.
- Change Password:
  1. Press “↵” to input old password.
  2. Use number button to enter current password and then press “↵” to confirm.
  3. Enter new password (4 digits in length) using the number buttons on the remote, then press “↵” to confirm.
  4. Enter new password again and press “↵” to confirm.

NOTE

❖ Pass-code default value is “1234” (first time).

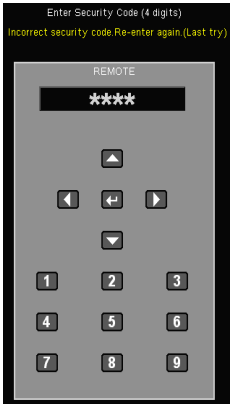

- If the incorrect password is entered 3 times, the projector will automatically shut down.
- If you have forgotten your password, please contact your local office for support.

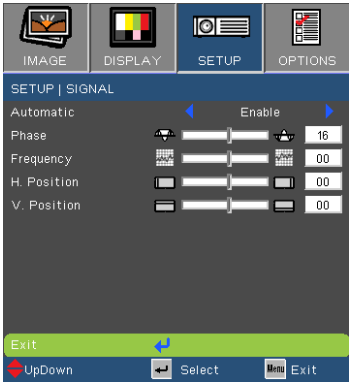

SETUP | Signal

❖ "Signal" is only supported in Analog VGA (RGB) signal.

Automatic

Automatically selects the singal. If you use this function, the Phase, frequency items are grayed out, and if Signal is not automatic, the phase, frequency items will appear for user to manually tune and saved in settings after that for next time projector turns off and on again.

Phase

Synchronize the signal timing of the display with the graphic card. If the image appears to be unstable or flickers, use this function to correct it.

Frequency

Change the display data frequency to match the frequency of your computer's graphic card. Use this function only if the image appears to flicker vertically.

H. Position

- Press the ◀ to move the image left.
- Press the ▶ to move the image right.

V. Position

- Press the ◀ to move the image down.
- Press the ▶ to move the image up.

SETUP | Audio Settings

Internal Speaker

Choose the “On” or “Off” to turn on or off the internal speaker.

Mute

- Choose the “On” to turn mute on.
- Choose the “Off” to turn mute off.

Volume

- Press the ◀ to decrease the volume.
- Press the ▶ to increase the volume.

Audio Input

The default audio settings are on the back panel of the projector. Use this option to reassign any of the Audio Inputs to the current image source.

- AUDIO: Audio connector port.
- HDMI: HDMI connector port.

OPTIONS

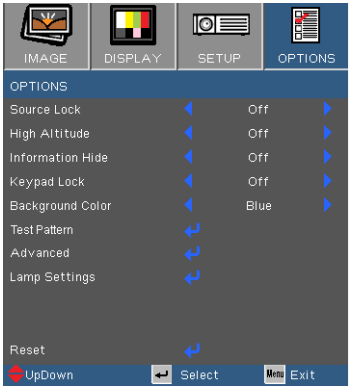

Source Lock

- On: The projector will only search current input connection.
- Off: The projector will search for other signals if the current input signal is lost.

High Altitude

When “On” is selected, the fans will spin faster. This feature is useful in high altitude areas where the air is thin.

Information Hide

- On: Choose “On” to hide the info message.
- Off: Choose “Off” to show the “searching” message.

NOTE

❖ To turn off the key-pad lock, press and hold “Enter” key on top of the projector for 5 seconds.

Keypad Lock

When the keypad lock function is “On”, the control panel will be locked however, the projector can be operated by the remote control. By selecting “Off”, you will be able to reuse the control panel.

Background Color

Use this feature to display a “Black”, “Red”, “Blue”, “Green” or “White”, screen when no signal is available.

Test Pattern

Display a test pattern. There are Grid, White pattern and None.

Reset

Choose “Yes” to return the display parameters on all menus to the factory default settings.

OPTIONS | Advanced

Direct Power On

Choose “On” to activate Direct Power mode. The projector will automatically power on when AC power is supplied, without pressing the “⏻” key on the projector control panel or on the remote control.

Auto Power Off (min)

Sets the countdown timer interval. The countdown timer will start, when there is no signal being sent to the projector. The projector will automatically power off when the countdown has finished (in minutes).

Sleep Timer (min)

Sets the countdown timer interval. The countdown timer will start, with or without a signal being sent to the projector. The projector will automatically power off when the countdown has finished (in minutes).

OPTIONS | Lamp Settings

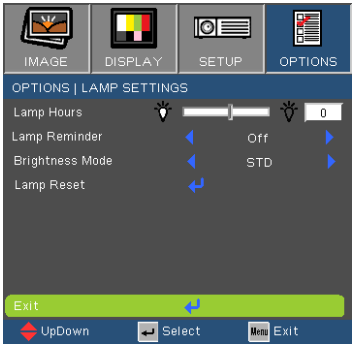

Lamp Hours

Display the projection time.

Lamp Reminder

Choose this function to show or to hide the warning message when the changing lamp message is displayed.
The message will appear 30 hours before suggested replacement of lamp.

Brightness Mode

- STD: Choose “STD” to dim the projector lamp which will lower power consumption and extend the lamp life.
- BRIGHT: Choose “BRIGHT” to increase the brightness.
- Image AI: Image AI improves the contrast of the picture by optimizing the brightness of the lamp according to the picture content. Image AI helps to ensure that details in dark scenes are visible, whilst maintaining bright and vivid images.

Lamp Reset

Reset the lamp hour counter after replacing the lamp.

Troubleshooting

If you experience a problem with your projector, please refer to the following information. If a problem persists, please contact your local reseller or service center.

? No image appears on-screen

- Ensure all the cables and power connections are correctly and securely connected as described in the “Installation” section.
- Ensure all the pins of connectors are not bent or broken.
- Check if the projection lamp has been securely installed. Please refer to the “Replacing the lamp” section.
- Make sure you have removed the lens cap and the projector is switched on.
- Ensure that the “AV mute” feature is not turned on.

? Partial, scrolling or incorrectly displayed image

- Press “Re-SYNC” on the remote.
- If you are using a PC:

For Windows 95, 98, 2000, XP, Windows 7:

1. Open the “My Computer” icon, the “Control Panel” folder, and then double click on the “Display” icon.
2. Select the “Settings” tab.
3. Verify that your display resolution setting is lower than or equal to UXGA (1600 × 1200).
4. Click on the “Advanced Properties” button.

If the projector is still not projecting the whole image, you will also need to change the monitor display you are using. Refer to the following steps.

5. Verify the resolution setting is lower than or equal to UXGA (1600 × 1200).
6. Select the “Change” button under the “Monitor” tab.

7. Click on “Show all devices”. Next, select “Standard monitor types” under the SP box; choose the resolution mode you need under the “Models” box.
8. Verify that the resolution setting of the monitor display is lower than or equal to UXGA (1600 × 1200).

- If you are using a Notebook:
  1. First, follow the steps above to adjust resolution of the computer.
  2. Press the appropriate keys listed below for your notebook manufacturer to send signal out from notebook to projector. Example: [Fn]+[F4]

Acer ⇨	[Fn]+[F5]	IBM/Lenovo ⇨	[Fn]+[F7]
Asus ⇨	[Fn]+[F8]	HP/Compaq ⇨	[Fn]+[F4]
Dell ⇨	[Fn]+[F8]	NEC ⇨	[Fn]+[F3]
Gateway ⇨	[Fn]+[F4]	Toshiba ⇨	[Fn]+[F5]

Mac Apple:
System Preference ⇨ Display ⇨ Arrangement ⇨ Mirror display

- If you experience difficulty changing resolutions or your monitor freezes, restart all equipment including the projector.

? The screen of the Notebook or PowerBook computer is not displaying your presentation

- <u>If you are using a Notebook PC</u>
  Some Notebook PCs may deactivate their own screens when a second display device is in use. Each has a different way to be reactivated. Refer to your computer’s manual for detailed information.

? Image is unstable or flickering

- Use “Phase” to correct it. See page 35 for more information.
- Change the monitor color setting on your computer.

? Image has vertical flickering bar

- Use “Frequency” to make an adjustment. See page 35 for more information.
- Check and reconfigure the display mode of your graphic card to make it compatible with the projector.

Image is out of focus

- Make sure the lens cap is removed.
- Adjust the Focus Ring on the projector lens.
- Make sure the projection screen is between the required distance. See page 16.

The image is stretched when displaying 16:9 DVD title

- When you play anamorphic DVD or 16:9 DVD, the projector will show the best image when the projector display mode is set to 16:9 in the OSD.
- If you play 4:3 format DVD titles, please change the format to 4:3 in the projector OSD.
- If the image is still stretched, you will also need to adjust the aspect ratio by referring to the following:
- Please setup the display format as 16:9 (wide) aspect ratio type on your DVD player.

Image is too small or too large

- Move the projector closer to or further from the screen.
- Press “Menu” button on the remote control or projector panel, go to “DISPLAY → Format” and try the different settings.

NOTE

- Use of Keystone is not recommended.

Image has slanted sides

- If possible, reposition the projector so that it is horizontally centered on the screen and below the bottom of the screen.
- Press “⏢ / ⏢” on the projector panel, until the sides are vertical.

Image is reversed

- Select “SETUP → Projection” from the OSD and adjust the projection direction.

The projector stops responding to all controls

- If possible, turn off the projector, then unplug the power cord and wait at least 60 seconds before reconnecting power.
- Check that “Keypad Lock” is not activated by trying to control the projector with the remote control.

Lamp burns out or makes a popping sound

- When the lamp reaches its end of life, it will burn out and may make a loud popping sound. If this happens, the projector will not turn on until the lamp module has been replaced. To replace the lamp, follow the procedures in the “Replacing the Lamp” section on pages 44-45.

LED lighting message

Message	ON/STANDBY LED	Temp-LED	Lamp-LED
	(Green/Amber)	(Red)	(Red)
Standby State (Input power cord)	Amber	○	○
Power on (Warming)	Flashing Green	○	○
Lamp lighting	Green	○	○
Power off (Cooling)	Flashing Green	○	○
Error (Over Temp.)	Flashing Amber	☼	○
Error (Fan fail)	Flashing Amber	Flashing	○
Error (Lamp fail)	Flashing Amber	○	☼

Steady light ⇨ ☼

No light ⇨ ○

＊ ON/STANDBY LED be ON when OSD appears, be OFF when OSD disappears.

On Screen Messages

- Temperature warning:

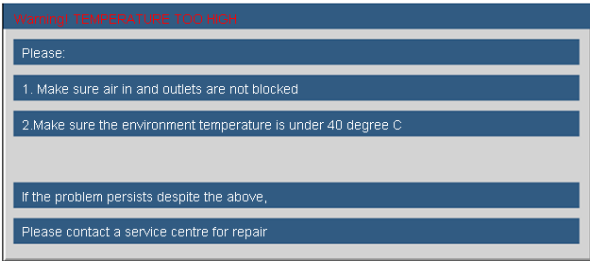

- Fan failed:

- Lamp warming:

- Out of display range:

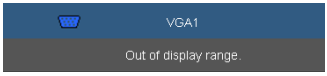

If the remote control does not work

- Check the operating angle of the remote control is within ±15° both horizontally and vertically of one of the IR receivers on the projector.
- Make sure there are not any obstructions between the remote control and the projector. Move to within 7 m (±0°) of the projector.
- Make sure the batteries are inserted correctly.
- Replace batteries if they are exhausted.

Replacing the lamp

The projector automatically detects the lamp life. When the lamp life is nearing the end of use, you will receive a warning message.

When you see this message, please contact your local reseller or service center to change the lamp as soon as possible. Make sure the projector has been cooled down for at least 30 minutes before changing the lamp.

CAUTION!

HIGH PRESSURE LAMP MAY EXPLODE IF IMPROPERLY HANDED. REFER TO LAMP REPLACEMENT INSTRUCTIONS.

ATTENTION:

Les lampes à haute pression peuvent exploser si elles sont mal utilisées.

Confier l'entretien à une personne qualifiée.

Warning: If ceiling mounted, please use caution when opening the lamp access panel. It is recommended to wear safety glasses if changing the bulb when ceiling mounted. “Caution must be used to prevent any loose parts from falling out of projector.”

Warning: Lamp compartment may be hot! Allow it to cool down before changing the lamp!

Warning: To reduce the risk of personal injury, do not drop the lamp module or touch the lamp bulb. The bulb may shatter and cause injury if it is dropped.

- The screws on the lamp cover and the lamp cannot be removed.
- The projector cannot be turned on if the lamp cover has not been placed back on the projector.
- Do not touch the glass area of the lamp. Hand oil can cause the lamp to shatter. Use a dry cloth to clean the lamp module if it was accidentally touched.

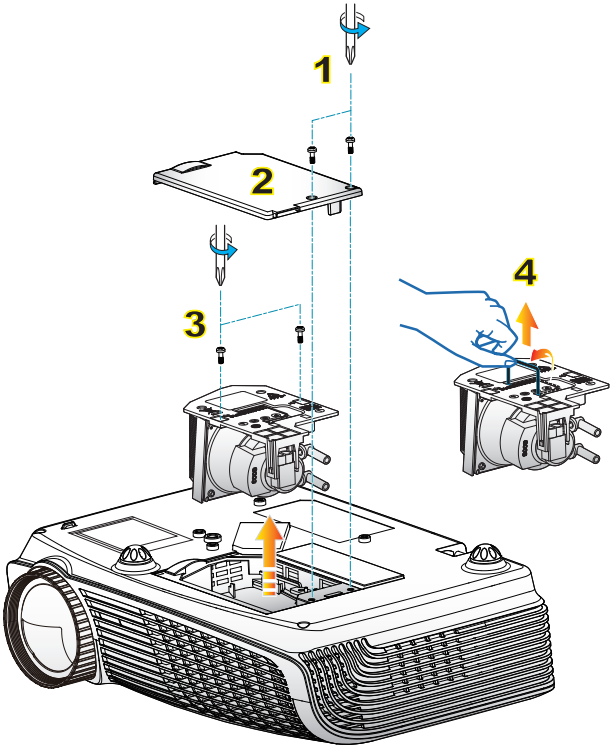

Lamp Replacement Procedure:

1. Switch off the power to the projector by pressing the "⏻" button.
2. Allow the projector to cool down for at least 30 minutes.
3. Disconnect the power cord.
4. Unscrew the two screws on the cover. 1
5. Lift up and remove the cover. 2
6. Unscrew the two screws on the lamp module. 3
7. Lift up the lamp handle and remove the lamp module slowly and carefully. 4

To replace the lamp module, reverse the previous steps.

8. Turn on the projector and use "Lamp Reset" after the lamp module is replaced.

Lamp Reset: (i) Press "Menu" → (ii) Select "OPTIONS" → (iii) Select "Lamp Settings" → (iv) Select "Lamp Reset" → (v) Select "Yes".

Compatibility Modes

Computer Compatibility

Mode	Resolution	V-Sync (Hz)		H-Sync (KHz)	
		Anglog	Digital	Anglog	Digital
VGA	640 × 350	70	70	31.50	31.50
VGA	640 × 350	85	85	37.90	37.90
VGA	640 × 400	85	85	37.90	37.90
VGA	640 × 480	60	60	31.50	31.50
VGA	640 × 480	67	67	-	-
VGA	640 × 480	72	72	37.90	37.90
VGA	640 × 480	75	75	37.50	37.50
VGA	720 × 400	70	70	31.50	31.50
VGA	720 × 400	85	85	37.90	37.90
SVGA	800 × 600	56	56	35.20	35.20
SVGA	800 × 600	60	60	37.90	37.90
SVGA	800 × 600	72	72	48.10	48.10
SVGA	800 × 600	75	75	46.90	46.90
SVGA	800 × 600	120	120	-	-
XGA	1024 × 768	60	60	48.40	48.40
XGA	1024 × 768	70	70	56.50	56.50
XGA	1024 × 768	75	75	60.00	60.00
XGA	1024 × 768	120	120	-	-
WXGA	1280 × 800	60	60	49.68	49.64
SXGA	1280 × 1024	60	60	63.98	63.98
	1366 × 768	60	60	-	-
	1440 × 900	60	60	55.94	55.94
	1680 × 1050	60	60	-	-
SXGA+	1400 × 1050	60	60	63.98	63.98
UXGA	1600 × 1200	60	60	75.00	75.00
WSXGA+	1680 × 1050	60	60	65.00	65.00
HD	1280 × 720	60	60	45.00	45.00
HD	1280 × 720	120	120	-	-
HD	1920 × 1080	60	60	-	-

NOTE

- For widescreen resolution (WXGA), the compatibility support is dependent on Notebook/PC models.
- 120Hz input signals may be dependent on graphics cards support.

Computer Compatibility

Mode	Resolution	V-Sync (Hz)	H-Sync (KHz)
MAC LC 13”	640 × 480	66.66	34.98
MAC II 13”	640 × 480	66.68	35.00
MAC 16”	832 × 624	74.55	49.73
MAC 19”	1024 × 768	75	60.24
MAC	1152 × 870	75.06	68.68
MAC G4	640 × 480	60	31.35
i MAC DV	1024 × 768	75	60.00
i MAC DV	1152 × 870	75	68.49

Video Compatibility

NTSC	M (3.58MHz), 4.43 MHz
PAL	B, D, G, H, I, M, N
SECAM	B, D, G, K, K1, L
SDTV/HDTV	480i/p, 576i/p, 720p@50Hz/60Hz, 1080i/p@50Hz/60Hz

3D input Compatibility

HDMI 1.4a 3D timing

Formats	Modes	Resolution	V.Frequency [Hz]	H.Frequency [KHz]	Pixel Rate [MHz]	DLP link	VESA 3D	Auto 3D format	Auto detection of L/R frame	3D to 2D
Frame Packing	720p	1280x720	50	75	148.5	O	O	O	O	O
	720p	1280x720	60	90	148.5	O	O	O	O	O
	1080p	1920x1080	24	54	148.5	O	O	O	O	O
Top and Bottom	720p	1280x720	50	37.5	74.25	O	O	O	O	O
	720p	1280x720	60	45	74.25	O	O	O	O	O
	1080p	1920x1080	24	27	74.25	O	O	O	O	O
Side by Side (half)	1080i	1920x1080	50(25)	33.75	74.25	O	O	O	O	O
	1080i	1920x1080	60(30)	33.75	74.25	O	O	O	O	O

HDMI 1.3 3D timing

Formats	Modes	Resolution	V.Frequency [Hz]	H.Frequency [KHz]	Pixel Rate [MHz]	DLP link	VESA 3D	Auto 3D format	Auto detection of L/R frame	3D to 2D
Frame Sequential	SVGA	800x600	120	76.3	73.25	O	O	X	X	O
	XGA	1024x768	120	97.6	115.5	O	O	X	X	O
	720p	1280x720	120/60			O	O	X	X	O
Side by Side (half)	1080i	1920x1080	50(25)	33.75	74.25	O	O	X	X	O
	1080i	1920x1080	60(30)	33.75	74.25	O	O	X	X	O
Top & Bottom (half)	1080i	1920x1080	50(25)	33.75	74.25	O	O	X	X	O
	1080i	1920x1080	60(30)	33.75	74.25	O	O	X	X	O

VGA 1.3 3D timing

Formats	Modes	Resolution	V.Frequency [Hz]	H.Frequency [KHz]	Pixel Rate [MHz]	DLP link	VESA 3D	Auto 3D format	Auto detection of L/R frame	3D to 2D
Frame Sequential	SVGA	800x600	120	76.3	73.25	O	O	X	X	X
	XGA	1024x768	120	97.6	115.5	O	O	X	X	X
	720p	1280x720	120/60			O	O	X	X	X

CVBS/S-Video

Formats	Modes	Resolution	V.Frequency [Hz]	H.Frequency [KHz]	Pixel Rate [MHz]	DLP link	VESA 3D	Auto 3D format	Auto detection of L/R frame	3D to 2D
Frame Sequential	NTSC	720x480	60	15.73		O	O	X	X	X
	PAL	720x576	50	15.63		O	O	X	X	X

RS232 Commands and Protocol Function List

RS232 Pin Assignments

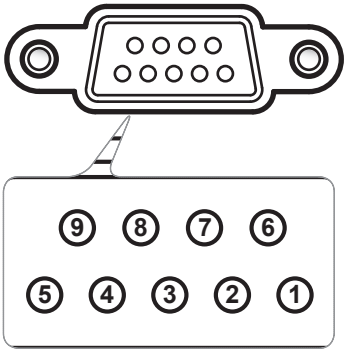

Pin no.	Spec. (from projector side)
1	N/A
2	RXD
3	TXD
4	N/A
5	GND
6	N/A
7	N/A
8	N/A
9	N/A

RS232 Protocol Function List

Optoma Data and HT Projectors **GT750**

Baud Rate	9600
Data Bits	8
Parity	None
Stop Bits	1
Flow Control	None
UART16550 FIFO	Disable

~	X	X	X	X		n	CR
Lead Code	Projector ID		Command ID		space	variable	carriage return

Function						ASCII	Pass	Fail
Power			On/Off		n=1/n=0 & 2	~XX00 n	P	F
Power On with Password						~XX00 1 =nnnn	P	F
Re-sync						~XX01 n	P	F
AV Mute			On/Off		n=1/n=0 & 2	~XX02 n	P	F
Mute			On/Off		n=1/n=0 & 2	~XX03 n	P	F
Freeze					n=1	~XX04 n	P	F
Unfreeze					n=0 & 2			
Zoom Plus					n=1	~XX05 n	P	F
Zoom Minus					n=1	~XX06 n	P	F
Direct Source Commands		HDMI 1			n=1	~XX12 n	P	
		HDMI 2			n=15			
		VGA 1			n=5			
		VGA 1 SCART			n=7			
		VGA 1 Component			n=8			
		S-Video			n=9			
		Video			n=10			
IMAGE	Display Mode	Presentation			n=1	~XX20 n	P	F
		Cinema			n=11			
		Bright			n=2			
		User			n=5			
		Blackboard			n=7			
		Classroom			n=8			
		3D			n=9			
		Game			n=12			
	Brightness				n= -50 - +50	~XX21 n	P	F
	Contrast				n= -50 - +50	~XX22 n	P	F
	Sharpness				n= 1- +15	~XX23 n	P	F
	Tint				n= -50 - +50	~XX44 n	P	F
	Color				n= -50 - +50	~XX45 n	P	F
	Advanced	Color Settings	RGB Gain/Bias	Red Gain	n= -50 - +50	~XX24 n		
				Green Gain	n= -50 - +50	~XX25 n		
				Blue Gain	n= -50 - +50	~XX26 n		
				Red Bias	n= -50 - +50	~XX27 n		
				Green Bias	n= -50 - +50	~XX28 n		
				Blue Bias	n= -50 - +50	~XX29 n		
				Cyan Gain	n= -50 - +50	~XX30 n		
				Yellow Gain	n= -50 - +50	~XX31 n		
				Magenta Gain	n= -50 - +50	~XX32 n		
				Reset	n=1	~XX33 n		
		BrilliantColor™			n= 0 - 10	~XX34 n	P	F
		Gamma	Film		n=1	~XX35 n	P	F
			Video		n=2	~XX35 n		
			Graphics		n=3	~XX35 n		
			PCStandard		n=4	~XX35 n		
		Color Temp.	Warm		n=1	~XX36 n	P	F
			Medium		n=2			
			Cold		n=3			
		Color Space	Auto		n=1	~XX37 n	P	F
			RGB \ RGB (0-255)*	* supports when HDMI is detected	n=2			
			RGB(16 - 235)*		n=4			
			YUV		n=3			
	Input Source Filters	HDMI 1			n=1	~XX39 n	P	F
		HDMI 2			n=7			
		VGA 1			n=5			
		S-Video			n=9			
		Video			n=10			
DISPLAY		Format	4:3		n=1	~XX60 n	P	F
			16:09		n=2			
			16:10		n=3			
			LBX		n=5			
			Native		n=6			
			AUTO		n=7			
			4:3-II		n=10			
		Edge masking			n = 0 - 10	~XX61 n	P	F
		Zoom			n=0-10	~XX62 n	P	F
		H Image Shift			n= -50 - +50	~XX63 n	P	F
		V Image Shift			n= -50 - +50	~XX64 n	P	F
		V Keystone			n= -50 - +50	~XX66 n	P	F
		3D Settings	3D Mode	DLP Link/VESA 3D	**n=1/n=3**	~XX230 n	P	F
			3D->2D	3D / L / R	2D->2D; 3D->3D / 3D->L /3D->R n=0/n=1/n=2	~XX400 n	P	F
			3D Format	SBS/Top and Bottom/Frame Sequential/ Auto	Decoding HDMI1.3 3D timing n=1/ n=3/n=4/n=5	~XX405 n		
			3D Sync. Invert	On/Off	n=0/n=1	~XX231 n		
SETUP	Language	English			n=1	~XX70 n	P	F
		German			n=2			
		French			n=3			
		Italian			n=4			
		Spanish			n=5			
		Portuguese			n=6			
		Polish			n=7			
		Dutch			n=8			
		Swedish			n=9			
		Norwegian/Danish			n=10			
		Finnish			n=11			
		Greek			n=12			
		Traditional Chinese			n=13			
		Simplified Chinese			n=14			
		Japanese			n=15			
		Korean			n=16			
		Russian			n=17			
		Hungarian			n=18			
		Czech			n=19			

~	X	X	X	X	X		n	CR
Lead Code	Projector ID		Command ID			space	variable	carriage return
SETUP	Language	Arabic			n=20			
		Thai			n=21			
		Turkish			n=22			
		Farsi			n=23			
	Projection	Front-Desktop			n=1	~XX71 n	P	F
		Rear-Desktop			n=2			
		Front-Ceiling			n=3			
		Rear-Ceiling			n=4			
	Menu Location	Top Left			n=1	~XX72 n	P	F
		Top Right			n=2			
		Centre			n=3			
		Bottom Left			n=4			
		Bottom Right			n=5			
	Signal	Automatic	Enable/Disable		n=1/n=0	~XX91 n		
		Frequency			n= -5 - +5	~XX73 n	P	F
		Phase			n= 0 - 63	~XX74 n	P	F
		H. Position			n= -5 - +5	~XX75 n	P	F
		V. Position			n= -5 - +5	~XX76 n	P	F
	Security	Security Timer	Month/Day/Hour		nnnnnn	~XX77 n	P	F
		Change Password				send back the password to confirm		
		Security	On/Off		n=1/n=0 & 2	~XX78 n	P	F
	Projector ID				n=00-99	~XX79 n	P	F
	Internal Speaker		On/Off		n=1/n=0 & 2	~XX310 n	P	F
	Mute		On/Off		n=1/n=0 & 2	~XX80 n	P	F
	Volume				n=0-10	~XX81 n	P	F
	Audio Input		**Default/Audio/HDMI**		n=1/n=2/n=6	~XX89 n	P	F
OPTIONS	Source Lock		On/Off		n=1/n=0 & 2	~XX100 n	P	F
	High Altitude		On/Off		n=1/n=0 & 2	~XX101 n	P	F
	Information Hide		On/Off		n=1/n=0 & 2	~XX102 n	P	F
	Keypad Lock		On/Off		n=1/n=0 & 2	~XX103 n	P	F
	test Pattern		None / Grid / White Pattern		n=0/n=1/n=2	~XX195 n		
	Background Color	Blue			n=1	~XX104 n	P	F
		Black			n=2			
		Red			n=3			
		Green			n=4			
		White			n=5			
	Advanced	Direct Power On	On/Off		n=1/n=0 & 2	~XX105 n	P	F
		Auto Power Off (min)			n=0-180	~XX106 n	P	F
		Sleep Timer (min)			n=000-995	~XX107 n	P	F
		Lamp Hour			n=1	~XX108 n	nnnn	F
		Lamp Reminder	On/Off		n=1/n=0 & 2	~XX109 n	P	F
		Brightness Mode	Bright/STD		n=1/n=2	~XX110 n	P	F
		Lamp Reset	Yes		n=1	~XX111 n	P	F
			No		n=2			
	Reset		Yes		n=1	~XX112 n	P	F
			No		n=2			
Information from Projector Automatically								
when:	Standby Mode				a=0		INFO**a**	
	Warming up				a=1		INFO**a**	
	Cooling Down				a=2		INFO**a**	
	Out of Range				a=3		INFO**a**	
	Lamp Fail				a=4			
	Thermal Switch Error				a=5			
	Fan Lock				a=6			
	Over Temperature				a=7			
	Lamp Hours Running Out				a=8			
READ/Return Information from projector								
	Information				n=1	~XX150 n	Ok**abbbbbccddddde**	
		a = Power State	Off/On		a=0/1			
		b = Lamp Hour			bbbb			
		c = Input Source Commands	None		c=00			
			VGA1		c=02			
			S-Video		c=04			
			Video		c=05			
			HDMI1		c=07			
			HDMI2		c=08			
		d = Firmware Version			dddd			
		e = Display mode	None		e=0			
			Presentation		e=1			
			Bright		**e=2**			
			Cinema		e=11			
			User(1)		e=5			
			ISF Day / Blackboard		e=7			
			ISF Night / Classroom		e=8			
			Game		e=12			
			3D		e=9			
	Model Name			**GT750 a=21**	n = 1	~XX151 n	Ok**a**	
			Depends		a=0/1/2			
		Input Source Commands	None/DVI/VGA-1/VGA-2/S-Video/VideoBNC/HDMI1/HDMI2/HDMI3/Wireless/Component		n=1	~XX121 n	Oka	a=0/1/2/3/4/5/6/7/8/9/10/11
		Software Version			n=1	~XX122 n	Okdddd	
		Display Mode	None/Presentation(Cinema)/Bright/Movie(Photos)/sRGB(Reference)/User(1)/User2/ ISF Day(Backboard)/ISF Night(Classroom)/3D/Game/Cinema		n=1	~XX123 n	Oka	a=0/1/2/5/7/8/9/10/11
		Power State	On/Off		n=1	~XX124 n	Oka	a=1/0
		Brightness			n=1	~XX125 n	Oka	
		Contrast			n=1	~XX126 n	Oka	

~	X	X	X		X	X		n	CR
Lead Code	Projector ID		Command ID				space	variable	carriage return
		Aspect Ratio	4:3/16:9-I/16:9-II(16:10)/Window/LBX/Native/AutoAuto235/Superwide/4:3-II			n=1	~XX127 n	Oka	a=1/2/3/5/6/7/10 for 4:3/16:9-I/16:9-II(16:10)/LBX/Native/Auto/4:3-II
		Color Temperature	Warm Medium Cold			n=1	~XX128 n	Oka	a=0/1/2 Warm/Medium/Cold
		Projection Mode	Front-Desktop Rear-Desktop Front-Ceiling Rear-Ceiling			n=1	~XX129 n	Oka	a=0/1/2/3 for Front-Desktop/Rear-Desktop/Front-Ceiling/Rear-Ceiling
		Output 3D State	n : 0/1 = 2D/3D				~XX503	Okn	n:0/1=2D/3D

Ceiling Mount Installation

1. To prevent damage to your projector, please use the Optoma ceiling mount.
2. If you wish to use a third party ceiling mount kit, please ensure the screws used to attach a mount to the projector meet the following specifications:
   - Screw type: M3*3
   - Maximum screw length: 10mm
   - Minimum screw length: 7.5mm

NOTE

- Please note that damage resulting from incorrect installation will void the warranty.

NOTE

Warning:

1. If you buy a ceiling mount from another company, please be sure to use the correct screw size. Screw size will vary depending on the thickness of the mounting plate.
2. Be sure to keep at least 10 cm gap between the ceiling and the bottom of the projector.
3. Avoid installing the projector near a heat source.

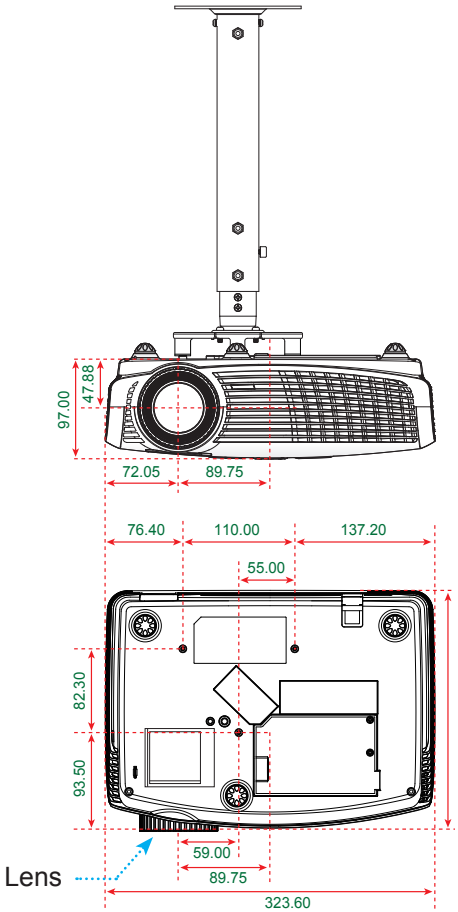

Unit: mm

Optoma Global Offices

For service or support please contact your local office.

USA

3178 Laurelview Ct.
Fremont, CA 94538, USA
www.optomausa.com

888-289-6786
510-897-8601
services@optoma.com

Canada

2420 Meadowpine Blvd., Suite #105
Mississauga, ON, L5N 6S2, Canada
www.optoma.ca

888-289-6786
510-897-8601
services@optoma.com

Europe

42 Caxton Way, The Watford Business Park
Watford, Hertfordshire,
WD18 8QZ, UK
www.optoma.eu
Service Tel : +44 (0)1923 691865

+44 (0) 1923 691 800
+44 (0) 1923 691 888
service@tsc-europe.com

France

Bâtiment E
81-83 avenue Edouard Vaillant
92100 Boulogne Billancourt, France

+33 1 41 46 12 20
+33 1 41 46 94 35
savoptoma@optoma.fr

Spain

C/ José Hierro,36 Of. 1C
28522 Rivas VaciaMadrid,
Spain

+34 91 499 06 06
+34 91 670 08 32

Deutschland

Wiesenstrasse 21 W
D40549 Düsseldorf,
Germany

+49 (0) 211 506 6670
+49 (0) 211 506 66799
info@optoma.de

Scandinavia

Lerpeveien 25
3040 Drammen
Norway

+47 32 98 89 90
+47 32 98 89 99
info@optoma.no

PO.BOX 9515
3038 Drammen
Norway

Benelux BV

Randstad 22-123
1316 BW Almere
The Netherlands

+31 (0) 36 820 0253
+31 (0) 36 548 9052
www.optoma.nl

Latin America

3178 Laurelview Ct.
Fremont, CA 94538, USA
www.optomausa.com

888-289-6786
510-897-8601
services@optoma.com

Korea

WOOMI TECH.CO.,LTD.
4F,Minu Bldg.33-14, Kangnam-Ku,
seoul,135-815, KOREA

+82+2+34430004
+82+2+34430005

Japan

東京都足立区綾瀬3-25-18
株式会社オーエスエム
サポートセンター:0120-46-5040

info@osscreen.com
www.os-worldwide.com

Taiwan

5F., No. 108, Minchiuan Rd.
Shindian City,
Taipei Taiwan 231, R.O.C.
www.optoma.com.tw

+886-2-2218-2360
+886-2-2218-2313
services@optoma.com.tw
asia.optoma.com

Hong Kong

Unit A, 27/F Dragon Centre,
79 Wing Hong Street,
Cheung Sha Wan,
Kowloon, Hong Kong

+852-2396-8968
+852-2370-1222
www.optoma.com.hk

China

5F, No. 1205, Kaixuan Rd.,
Changning District
Shanghai, 200052, China

+86-21-62947376
+86-21-62947375
www.optoma.com.cn

Regulation & Safety Notices

This appendix lists the general notices of your projector.

FCC notice

This device has been tested and found to comply with the limits for a Class B digital device pursuant to Part 15 of the FCC rules. These limits are designed to provide reasonable protection against harmful interference in a residential installation. This device generates, uses and can radiate radio frequency energy and, if not installed and used in accordance with the instructions, may cause harmful interference to radio communications.

However, there is no guarantee that interference will not occur in a particular installation. If this device does cause harmful interference to radio or television reception, which can be determined by turning the device off and on, the user is encouraged to try to correct the interference by one or more of the following measures:

- Reorient or relocate the receiving antenna.
- Increase the separation between the device and receiver.
- Connect the device into an outlet on a circuit different from that to which the receiver is connected.
- Consult the dealer or an experienced radio/television technician for help.

Notice: Shielded cables

All connections to other computing devices must be made using shielded cables to maintain compliance with FCC regulations.

Caution

Changes or modifications not expressly approved by the manufacturer could void the user's authority, which is granted by the Federal Communications Commission, to operate this projector.

Operation conditions

This device complies with Part 15 of the FCC Rules. Operation is subject to the following two conditions:

1. This device may not cause harmful interference and
2. This device must accept any interference received, including interference that may cause undesired operation.

Notice: Canadian users

This Class B digital apparatus complies with Canadian ICES-003.

Remarque à l'intention des utilisateurs canadiens

Cet appareil numerique de la classe B est conforme a la norme NMB-003 du Canada.

Declaration of Conformity for EU countries

- EMC Directive 2004/108/EC (including amendments)
- Low Voltage Directive 2006/95/EC
- R & TTE Directive 1999/5/EC (if product has RF function)

Disposal instructions

Do not throw this electronic device into the trash when discarding. To minimize pollution and ensure utmost protection of the global environment, please recycle it.