USA's primary source for projector lamps
myprojectorlamps

PROJECTOR OWNER'S MANUAL

Optoma

EW631 / EX631 / FW5200 / FX5200

Need a replacement lamp for this projector?

www.myprojectorlamps.com

Original manufacturer manual, provided unmodified as a courtesy of MyProjectorLamps.com.
All trademarks belong to their respective owners.

CONTENTS

Usage Notice **2**
Safety Instructions 2
Introduction **5**
Projector Features 5
Package Contents 6
Projector Overview 7
Using the Product **9**
Control Panel 9
Connection Ports 10
Remote Control 11
Remote Control 13
Installing the Batteries 15
Remote Control Operation 16
Connection **17**
Connecting a computer or monitor 18
Connecting Video source devices 19
Operation **23**
Powering On/Off the Projector 23
Adjusting the Projector Height 24
Adjusting the Projector Zoom and Focus 24
Adjusting Projection Image Size 25
Menu Operation 26
Use web browser to control your projector 36
Crestron RoomView Control Tool 40
Appendix **43**
Replacing the Lamp 43
Ceiling mount installation 45
Compatibility Modes 46
RS232 Commands and Protocol Function List 49
Troubleshooting 53
Optoma Global Offices 55
Regulation & Safety Notices 58

Usage Notice

Safety Instructions

Read all of these instructions before you operate your projector and save for future reference.

1. Read instructions
   All the safety and operating instructions should be read before the appliance is operated.
2. Notes and warnings
   All notes and warnings in the operating instructions should be adhered to.
3. Cleaning
   Unplug the projector from the wall socket before cleaning. Use a damp cloth for cleaning the projector housing. Do not use liquid or aerosol cleaners.
4. Accessories
   Do not place this product on an unstable cart, stand, or table. The product may fall, causing serious damage to the product.
   Keep the plastic packing materials (from the projector, accessories and optional parts) out of the reach of children as these bags may result in death by suffocation. Be particularly careful around the small children.
5. Ventilation
   The projector is equipped with ventilation holes (intake) and ventilation holes (exhaust). Do not block or place anything near these slots, or internal heat build-up may occur, causing picture degradation or damage to the projector.
6. Power sources
   Check that the operating voltage of your unit is identical with the voltage of your local power supply.
7. Servicing
   Do not attempt to service this projector yourself. Refer all servicing to qualified service personnel.

8.	Replacement parts When replacement parts are required, be sure that the replacement parts are specified by the manufacture. Unauthorized substitutions may result in fire, electric shock or other hazards.
9.	Moisture Condensation Never operate this projector immediately after moving it from a cold location to a warm one. When the projector is exposed to such a change in temperature, moisture may condense on the lens and the crucial internal parts. To prevent the unit from possible damage, do not use the projector for at least 2 hours when there is an extreme or sudden change in temperature.

Notes on the AC Power Cord

AC Power Cord must meet the requirement of countries where you use this projector. Please confirm your AC plug type with the graphics below and ensure that the proper AC Power Cord is used. If the supplied AC Power Cord does not match your AC outlet, please contact your sales dealer. This projector is equipped with a grounding type AC line plug. Please ensure that your outlet fits the plug. Do not defeat the safety purpose of this grounding type plug. We highly recommend using a video source device also equipped with a grounding type AC line plug to prevent signal interference due to voltage fluctuations.

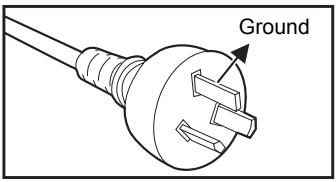

For Australia and
Mainland China

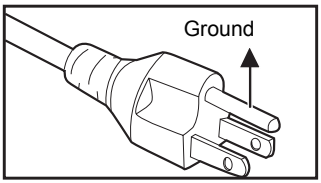

For the U.S.A. and Canada

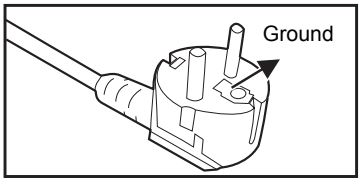

For Continental Europe

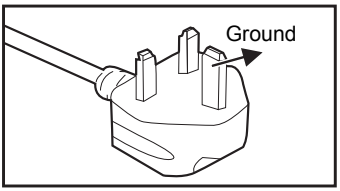

For the U.K.

Introduction

Projector Features

The projector integrates high-performance optical engine projection and a user - friendly design to deliver high reliability and ease of use.
The projector offers the following features:

- Single chip 0.55" Texas Instruments DLP® technology (XGA model)
- Single chip 0.65" Texas Instruments DLP® technology (WXGA model)
- XGA (1024 x 768 pixels)
- WXGA (1280 x 800 pixels)
- Compatibility with Macintosh® computers
- Compatibility with NTSC, PAL, SECAM and HDTV
- D-Sub 15-pin terminal for analog video connectivity
- User-friendly, multi-language on-screen display
- Advanced electronic keystone correction
- RS-232 connector for serial control
- HDMI compatibility
- Support wireless dongle via internal power of VGA 1
- Support Optoma 3D-XL
- Implemented new Quick Resume feature
- New Eco+ mode for more economic usage

Note

- *The information in this manual is subject to change without notices.*
- *The reproduction, transfer or copy of all or any part of this document is not permitted without express written consent.*

Package Contents

When you unpack the projector, make sure you have all these components:

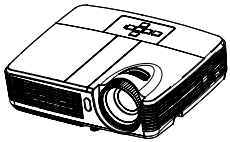

Projector

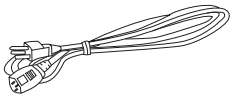

AC Power Cord

Remote Control (IR) & batteries (AAA *2 PCS)

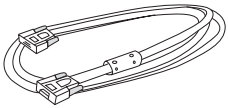

VGA Cable (D-SUB to D-SUB)

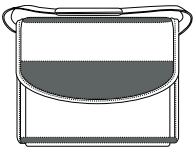

Carry Bag (optional for certain models)

Remote Control (IR) & batteries (AAA *2 PCS) for China

Documentation:

- ☑User's Manual
- ☑Warranty Card
- ☑Quick Start Card
- ☑WEEE Card (for EMEA only)

Note

- *For European warrant information please visit www.optomaeurope.com*
- *Due to the difference in applications for each country, some regions may have different accessories.*
- *Contact you dealer immediately if any items are missing, appear damaged, or if the unit does not work.*
- *Save the original shipping carton and Packing material; they will come-in handy if you ever to ship your unit. for maximum protection, repack your unit as it was originally packed at the factory.*

Projector Overview

Front View

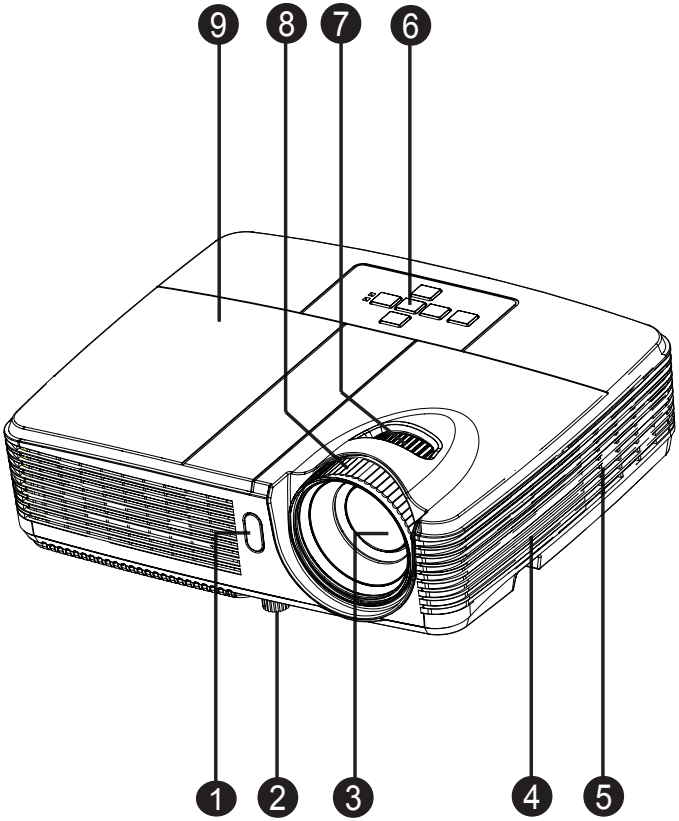

❶ Front IR remote control sensor
❷ Elevator foot
❸ Projection lens
❹ Speaker
❺ Ventilation holes
❻ Control panel
❼ Zoom ring
❽ Focus ring
❾ Lamp cover

Rear View

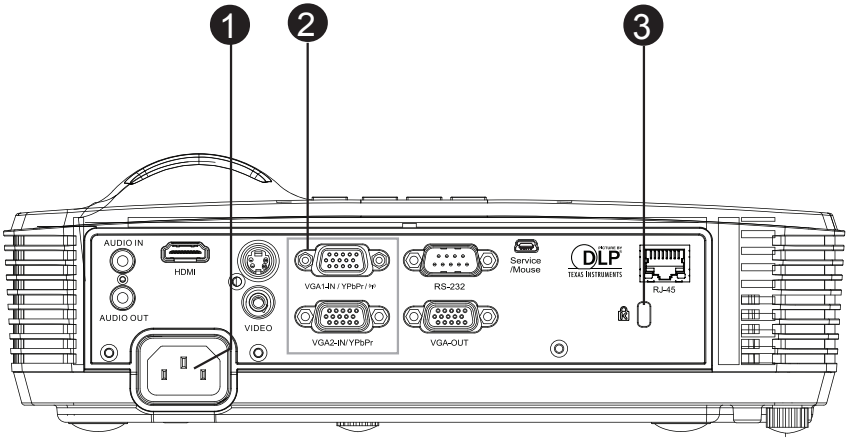

❶ AC power socket
❷ Connection ports
❸ Kensington lock

Bottom View

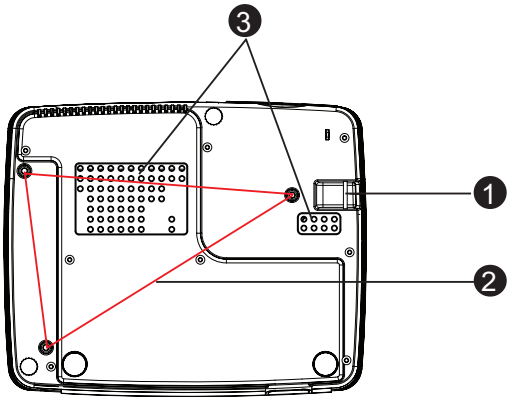

❶ Security bar
❷ Ceiling mount holes
❸ Ventilation holes

Note

- *This projector can be used with a ceiling mount for support. The ceiling mount is not included in the package.*
- *Contact your dealer for information to mount the projector on a ceiling.*

Using the Product

Control Panel

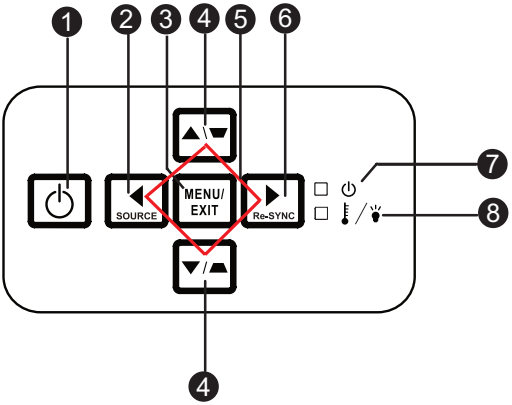

❶ ⏻ **Power**
Turn the projector on or off.

❷ **SOURCE**
Switch between input signals.

❸ **MENU/EXIT**
Display or exit the on-screen display menus.

❹ **Keystone (▼/▲)**
Manually correct distorted images resulting from an angled projection.

❺ **Four directional buttons**
Use four directional buttons to select items or make adjustments to your selection.

❻ **Re-SYNC**
Automatically synchronize the projector to the input source.

❼ **POWER** (Power LED indicator)
Refer to “LED Indicator Messages”.

❽ **TEMP/LAMP** (Temp/Lamp LED indicator)
Refer to “LED Indicator Messages”.

Connection Ports

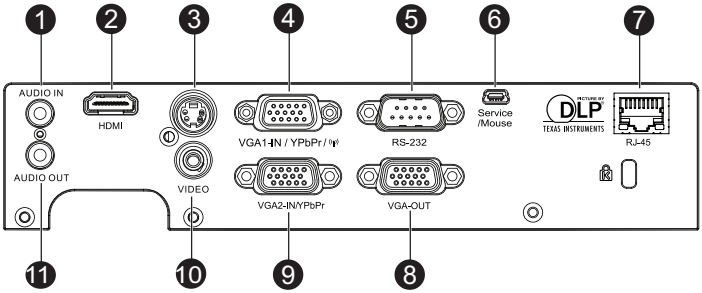

❶ **AUDIO IN**
Connect an audio output from video equipment or computer to this jack.

❷ **HDMI**
Connect HDMI output from video equipment to this jack.

❸ **S-VIDEO**
Connect S-Video output from video equipment to this jack.

❹ **VGA1-IN/YPbPr/**
Connect image input signal (analog RGB or component) to this jack.
Support wireless dongle via internal power of VGA 1.

❺ **RS-232**
When operating the projector via a computer, connect this to the controlling computer's RS-232C port.

❻ **Service/Mouse**
This connector is for firmware update and mouse function support.

❼ **RJ-45**
For LAN display/network control and web server.

❽ **VGA OUT**
Connect to a computer display, etc.

❾ **VGA2-IN/YPbPr**
Connect image input signal (analog RGB or component) to this jack.

❿ **VIDEO**
Connect composite video output from video equipment to this jack.

⓫ **AUDIO OUT**
Connect to a speaker or other audio input equipment.

Remote Control

❶ **Power**
Turn the projector on or off.

❷ **Four directional buttons**
Use four directional buttons to select items or make adjustments to your selection.
"UP" key: When menu is off, up key for emulation of USB mouse.
"Left" key: When menu is off, left key for emulation of USB mouse.
"Right" key: When menu is off, right key for emulation of USB mouse.
"Down" key: When menu is off, down key for emulation of USB mouse.

❸ **L Button**
Perform the left button of the mouse.

❹ **Source**
Switch between input signals.
When menu is on, left key for OSD.

❺ **Switch/ 🖱**
🖱 Switch to mouse mode when the on-screen menus are close.

❻ **Keystone+/-**
Manually correct distorted images resulting from an angled projection.

❼ **Menu**
Display on-screen display menus.

❽ **Brightness**
Display the setting bar for adjustment of brightness.

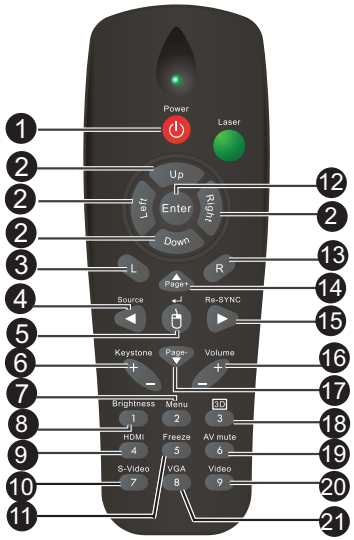

❾ **HDMI**
Display HDMI signal.
(This function will not work if product does not have HDMI)

❿ **S-Video**
Display S-Video signal.

⓫ **Freeze**
Freeze the projected image.

⓬ **Enter**
Confirm your item selection.

⓭ **R Button**
Perform the right button of the mouse.

⓮ **Page +**
Perform page up function.
When menu is on, up key for OSD.

⑮ **Re-SYNC**
Automatically synchronize the projector to the input source. When menu is on, right key for OSD.

⑯ **Volume+/-**
Adjust the volume level.

⑰ **Page -**
Perform page down function. When menu is on, down key for OSD.

⑱ **3D**
Turn on or off 3D function.

⑲ **AV mute**
Cut off the AV Mute temporarily. Only pressing AV Mute again can output sound and image. If any other buttons are pressed, the projection image will become abnormal and no sound will be output.

⑳ **Video**
Display video signal.

㉑ **VGA**
Switch input source to VGA1 or VGA2 by sequence.

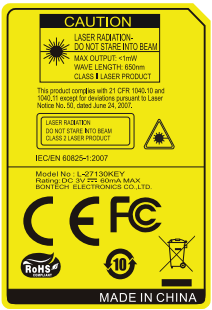

Using the remote mouse control

The capability of operating your computer with the remote control gives you more flexibility when delivering presentations.

1. Connect the projector to your PC or notebook with a USB cable prior to using the remote control in place of your computer's mouse. See "Connecting a computer" on page 18 for details.
2. Set the input signal to **VGA1** or **VGA2**.
3. Press **Switch** on the remote control to switch to mouse mode when the on-screen menus are close. An icon appears on the screen to indicate the activation of the mouse mode.
4. Perform the desired mouse controls on your remote control.
   - To move the cursor on the screen, press ▲/ ▼/ ◄/► .
   - To left-click, press **L**.
   - To right-click, press **R**.
   - To return to the normal mode, press **Switch** again.

Note

- *HDMI doesn't support mouse function.*

Remote Control

❶ **Switch**
Switch to mouse mode when the on-screen menus are close.

❷ **Source**
Switch between input signals.

❸ **Four directional buttons**
Use four directional buttons to select items or make adjustments to your selection.

❹ **Left mouse**
Perform the left button of the mouse when mouse mode is activated.

❺ **Keystone (⏢/⏢)**
Manually correct distorted images resulting from an angled projection.

❻ **Brightness**
Display the setting bar for adjustment of brightness.

❼ **Freeze**
Freeze the projected image.

❽ **HDMI**
Display HDMI signal.
(This function will not work if product does not have HDMI)

❾ **S-Video**
Display S-Video signal.

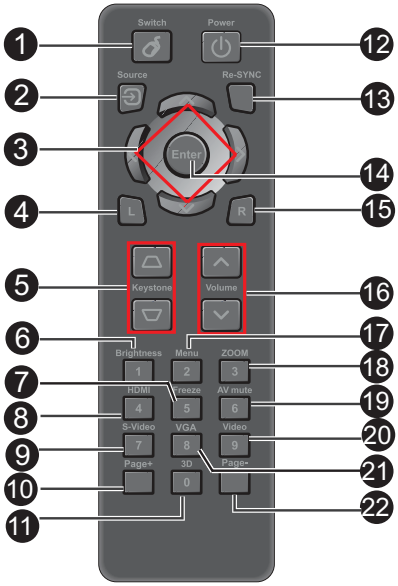

❿ **Page+**
Perform page up function when mouse mode is activated.

⓫ **3D**
Turn on or off 3D function.

⓬ **Power**
Turn the projector on or off.

⓭ **Re-SYNC**
Automatically synchronize the projector to the input source.

⓮ **Enter**
Confirmed selections.

⓯ **Right mouse**
Perform the right button of the mouse when mouse mode is activated.

⓰ **Volume (∧/∨)**
Adjust the volume level.

⓱ **Menu**
Display on-screen display menus.

⓲ **ZOOM**
Magnifies or reduces the projected picture size.

⓳ **AV mute**
Cut off the AV Mute temporarily. Only pressing AV Mute again can output sound and image. If any other buttons are pressed, the projection image will become abnormal and no sound will be output.

⓴ **Video**
Display video signal.

㉑ **VGA**
Switch input source to VGA1 or VGA2 by sequence.

㉒ **Page-**
Perform page down function when mouse mode is activated.

Installing the Batteries

1. Open the battery cover in the direction shown.

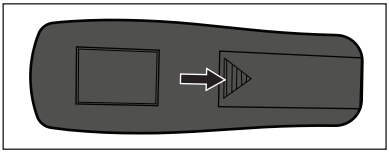

2. Install batteries as indicated by the diagram inside the compartment.

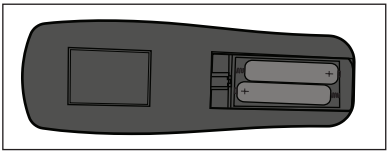

3. Close the battery cover into position.

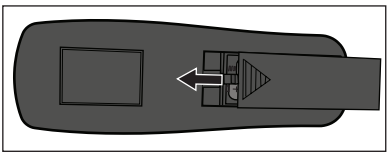

Caution

■Risk of explosion if battery is replaced by an incorrect type.

■Dispose of used batteries according to the instructions.

■Make sure the plus and minus terminals are correctly aligned when loading a battery.

Note

- *Keep the batteries out of the reach of children. There is a danger of death by accidentally swallowing the batteries.*
- *Remove batteries from remote control when not using for extended periods.*
- *Do not dispose of the used batteries along with household waste. Dispose of used batteries according to local regulations.*
- *Danger of explosion may happen if batteries are incorrectly replaced. Replce all the batteries with new ones.*
- *Batteries should not be in or near to fire or water, keep batteries in a dark, cool and dry place.*
- *If suspect battery leakage, wipe out the leakage and then replace new batteries. If the leakage adheres to your body or clothes, rinse well with water immediately.*

Remote Control Operation

Point the remote control at the infrared remote sensor and press a button.

- Operating the projector from the front

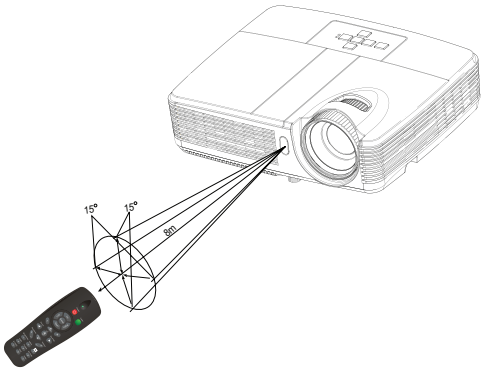

Note

- *The remote control may not operate when there is sunlight or other strong light such as a fluorescent lamp shining on the remote sensor.*
- *Operate the remote control from a position where the remote sensor is visible.*
- *Do not drop the remote control or jolt it.*
- *Keep the remote control out of locations with excessively high temperature or humidity.*
- *Do not get water on the remote control or place wet objects on it.*
- *Do not disassemble the remote control.*

Connection

When connecting a signal source to the projector, be sure to:

1. Turn all equipment off before making any connections.
2. Use the correct signal cables for each source.
3. Ensure the cables are firmly inserted.

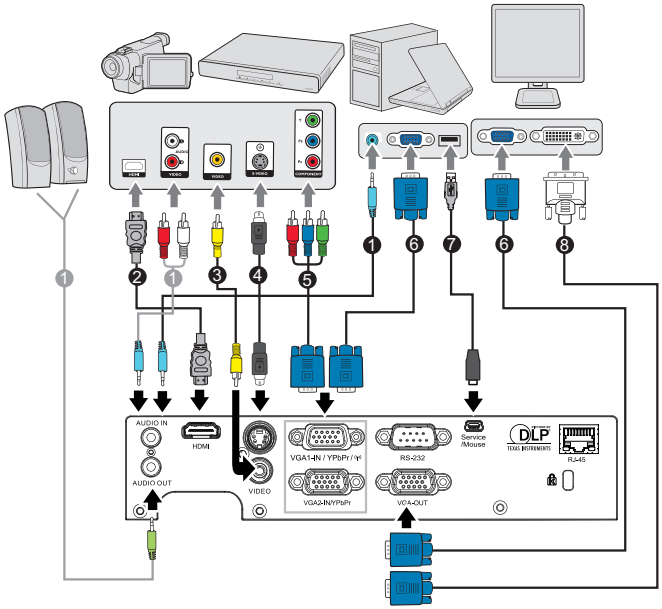

1. .....*Audio cable
2. .....*HDMI cable
3. ..... *Composite Video cable
4. .....*S-Video cable
5. .....*VGA (D-Sub) to HDTV (RCA) cable
6. ..... VGA cable (D-Sub to D-Sub)
7. .....*USB cable
8. .....*VGA to DVI-A cable

Note

- *Due to the difference in applications for each country, some regions may have different accessories.*
- *(*) Optional Accessory*

Connecting a computer or monitor

Connecting a computer

The projector provides two VGA input sockets that allow you to connect them to both IBM® compatibles and Macintosh® computers. A Mac adapter is needed if you are connecting legacy version Macintosh computers.

To connect the projector to a notebook or desktop computer:

1. Take the supplied VGA cable and connect one end to the D-Sub output socket of the computer.
2. Connect the other end of the VGA cable to the **VGA1-IN/YPbPr** or **VGA2-IN/YPbPr** signal input socket on the projector.

☞ **Important**

- Many notebooks do not turn on their external video ports when connected to a projector. Usually a key combo like FN + F3 or CRT/LCD key turns the external display on/off. Locate a function key labeled CRT/LCD or a function key with a monitor symbol on the notebook. Press FN and the labeled function key simultaneously. Refer to your notebook's documentation to find your notebook's key combination.

Connecting a monitor

If you want to view your presentation close-up on a monitor as well as on the screen, you can connect the **VGA OUT** signal output socket on the projector to an external monitor with a VGA cable following the instructions below:

To connect the projector to a monitor:

1. Connect the projector to a computer as described in “Connecting a computer” on page 18.
2. Take a suitable VGA cable (only one supplied) and connect one end of the cable to the D-Sub input socket of the video monitor.
   Or if your monitor is equipped with a DVI input socket, take a VGA to DVI-A cable and connect the DVI end of the cable to the DVI input socket of the video monitor.
3. Connect the other end of the cable to the **VGA OUT** socket on the projector.

☞ **Important**

- The **VGA OUT** output only works when **VGA1-IN/YPbPr** or **VGA2-IN/YPbPr** is made to the projector.

Connecting Video source devices

You can connect your projector to various Video source devices that provide any one of the following output sockets:

- HDMI
- Component Video
- S-Video
- Video (composite)

You need only connect the projector to a Video source device using just one of the above connecting methods, however each provides a different level of video quality. The method you choose will most likely depend upon the availability of matching terminals on both the projector and the Video source device as described below:

Terminal name	Terminal appearance	Reference	Picture quality
HDMI	HDMI	"Connecting an HDMI source device" on page 20	Best
Component Video	VGA1-IN/YPbPr or VGA2-IN/YPbPr	"Connecting a Component Video source device" on page 18	Better
S-Video	S-VIDEO	"Connecting an S-Video source device" on page 21	Good
Video	VIDEO	"Connecting a composite Video source device" on page 22	Normal

Note

- *Not all models have HDMI input jack, please check your projector before connecting*

Connecting an HDMI source device

Examine your Video source device to determine if it has a set of unused HDMI output jacks available:

- If so, you can continue with this procedure.
- If not, you will need to reassess which method you can use to connect to the device.

To connect the projector to an HDMI source device:

1. Take an HDMI cable and connect one end to the HDMI output jack of the HDMI source device.
2. Connect the other end of the HDMI cable to the **HDMI** jack on the projector.

Connecting a Component Video source device

Examine your Video source device to determine if it has a set of unused Component Video output sockets available:

- If so, you can continue with this procedure.
- If not, you will need to reassess which method you can use to connect to the device.

To connect the projector to a Component Video source device:

1. Take a VGA (D-Sub) to HDTV (RCA) cable and connect the end with 3 RCA type connectors to the Component Video output sockets of the Video source device. Match the color of the plugs to the color of the sockets; green to green, blue to blue, and red to red.
2. Connect the other end of the cable (with a D-Sub type connector) to the **VGA1-IN/YPbPr** or **VGA2-IN/YPbPr** socket on the projector.

☞ **Important**

- If the selected video image is not displayed after the projector is turned on and the correct video source has been selected, check that the Video source device is turned on and operating correctly. Also check that the signal cables have been connected correctly.

Connecting an S-Video source device

Examine your Video source device to determine if it has an unused S-Video output socket available:

- If so, you can continue with this procedure.
- If not, you will need to reassess which method you can use to connect to the device.

To connect the projector to an S-Video source device:

1. Take an S-Video cable and connect one end to the S-Video output socket of the Video source device.
2. Connect the other end of the S-Video cable to the **S-VIDEO** socket on the projector.

☞ **Important**

- If the selected video image is not displayed after the projector is turned on and the correct video source has been selected, check that the Video source device is turned on and operating correctly. Also check that the signal cables have been connected correctly.
- If you have already made a Component Video connection between the projector and this S-Video source device using Component Video connections, you need not connect to this device using an S-Video connection as this makes an unnecessary second connection of poorer picture quality. See “Connecting Video source devices” on page 19 for details.

Connecting a composite Video source device

Examine your Video source device to determine if it has a set of unused composite Video output sockets available:

- If so, you can continue with this procedure.
- If not, you will need to reassess which method you can use to connect to the device.

To connect the projector to a composite Video source device:

1. Take a Video cable and connect one end to the composite Video output socket of the Video source device.
2. Connect the other end of the Video cable to the **VIDEO** socket on the projector.

☞ **Important**

- If the selected video image is not displayed after the projector is turned on and the correct video source has been selected, check that the Video source device is turned on and operating correctly. Also check that the signal cables have been connected correctly.
- You need only connect to this device using a composite Video connection if Component Video and S-Video inputs are unavailable for use. See “Connecting Video source devices” on page 19 for details.

Operation

Powering On/Off the Projector

Powering On the Projector:

1. Complete the AC power cord and peripheral signal cable(s) connections.
2. Press ⏻ to turn on the projector.
   The projector takes a minute or so to warm up.
3. Turn on your source (computer, notebook, DVD, etc.). The projector automatically detects your source.
   - If you are connecting multiple sources to the projector simultaneously, press **SOURCE** on the projector or **Source** on the remote control to select your desired signal or press your desired signal key on the remote control.

⚠ **Warning**

- Never look into the lens when the lamp is on. This can damage your eyes.
- This focal point concentrates high temperature. Do not place any object near it to avoid possible fire hazard.

Powering Off the Projector:

1. Press ⏻ to turn off the projector lamp. You will see a message "Power off? Press Power again" appear on the screen.
2. Press ⏻ again to confirm.
   - The cooling fans continue to operate for cooling cycle.
   - When the Power LED becomes steady blue, the projector has entered stand-by mode.
   - If you want to turn the projector back on, you must wait until the projector has completed the cooling cycle and has entered stand-by mode. Once in stand-by mode, simply press ⏻ to restart the projector.
3. Disconnect the AC power cord from the electrical outlet and the projector.
4. Do not turn on the projector right after power off.

⚠ **Warning**

- When Quick Resume is on, if turning off the projector accidentally and Quick Resume selected within a period of 100 seconds, the projector will instantly power on again.
- When Quick Resume is off, if turning off the projector, users need to wait until the cooling process is finished and then restart the projector. It will take a few minutes because the fan will keep running until the internal temperature is reduced to certain level.

Adjusting the Projector Height

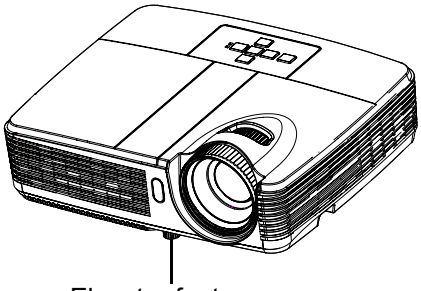

The projector is equipped with an elevator foot to adjust the image height. To raise or lower the image, turn the elevator foot to fine-tune the height.

Note

- *To avoid damaging the projector, make sure that the elevator foot is fully retracted before placing the projector in its carrying case.*

Adjusting the Projector Zoom and Focus

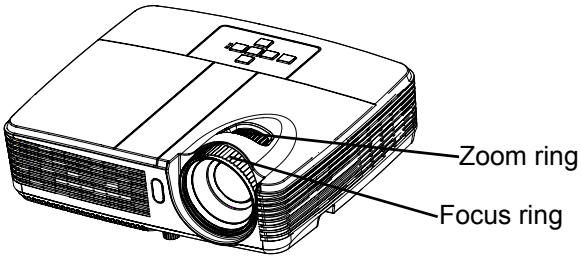

1. Focus the image by rotating the focus ring. A still image is recommended for focusing.
2. Adjust the image size by rotating the zoom ring.

Adjusting Projection Image Size

Refer to the graphic and table below to determine the screen size and projection distance.

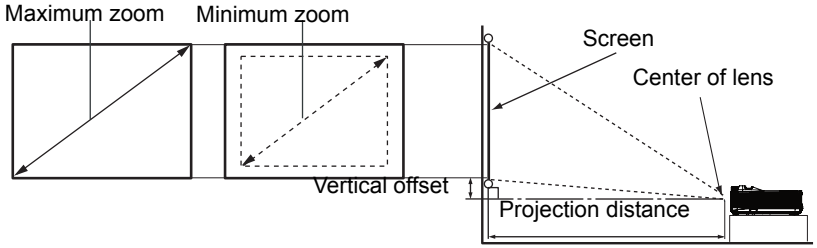

XGA model

Screen size Diagonal [inch (cm)]	4 : 3 Screen			
	Projection distance [inch (m)]		Image height [inch (cm)]	Vertical offset [inch (cm)]
	(min. zoom)	(max. zoom)		
30 (76)	45 (1.15)	51 (1.3)	18 (46)	2.7(7)
40 (102)	61 (1.55)	68 (1.7)	24 (61)	3.6(9)
60 (152)	92 (2.33)	102 (2.6)	36 (91)	5.4 (14)
80 (203)	123 (3.12)	137 (3.5)	48 (122)	7.2 (18)
100 (254)	154 (3.90)	171 (4.3)	60 (152)	9.0 (23)
120 (305)	185 (4.69)	205 (5.2)	72 (183)	10.8 (27)
150 (381)	231 (5.87)	257 (6.5)	90 (229)	13.5 (34)
200 (508)	308 (7.83)	343 (8.7)	120 (305)	18.0 (46)
250 (635)	386 (9.80)	427 (10.9)	150 (381)	22.5 (57)
300 (762)	463 (11.77)	515 (13.1)	180 (457)	27.0 (69)

WXGA model

Screen size Diagonal [inch (cm)]	4 : 3 Screen			
	Projection distance [inch (m)]		Image height [inch (cm)]	Vertical offset [inch (cm)]
	(min. zoom)	(max. zoom)		
30 (76)	37 (0.9)	46 (1.16)	16 (40)	2.4(6)
40 (102)	49 (1.3)	61 (1.55)	21 (54)	3.2(8)
60 (152)	74 (1.9)	92 (2.33)	32 (81)	4.8 (12)
80 (203)	100 (2.5)	123 (3.12)	42 (108)	6.4 (16)
100 (254)	125 (3.2)	154 (3.90)	53 (135)	7.9 (20)
120 (305)	150 (3.8)	185 (4.69)	64 (162)	9.5 (24)
150 (381)	187 (4.8)	231 (5.86)	79 (202)	11.9 (30)
200 (508)	250 (6.4)	308 (7.83)	106 (269)	15.9 (40)
250 (635)	313 (8.0)	385 (9.79)	132 (336)	19.9 (50)
300 (762)	376 (9.5)	463 (11.75)	159 (404)	23.8 (61)

Note

- *Position the projector in a horizontal position; other positions can cause heat build-up and damage to the projector.*
- *Keep a space of 30 cm or more between the sides of the projector.*
- *Do not use the projector in a smoky environment. Smoke residue may build-up on critical parts and damage the projector or its performance.*
- *Consult with your dealer for special installation such as suspending from a ceiling.*

Menu Operation

The projector has multilingual on-screen display menus that allow you to make image adjustments and change a variety of settings.

How to operate

1. Press **MENU** on the projector or **Menu** on the remote control to open the OSD menu.
2. When OSD is displayed, use ▲/▼ to select any feature in the main menu.
3. After selecting the desired main menu item, press ► to enter sub-menu for feature setting.
4. Use ▲/▼ to select the desired item and adjust the settings with ◄/►.
5. Press **MENU** on the projector or **Menu** on the remote control, the screen will return to the main menu.
6. To exit OSD, Press **MENU** on the projector or **Menu** on the remote control again. The OSD menu will close and the projector will automatically save the new settings.

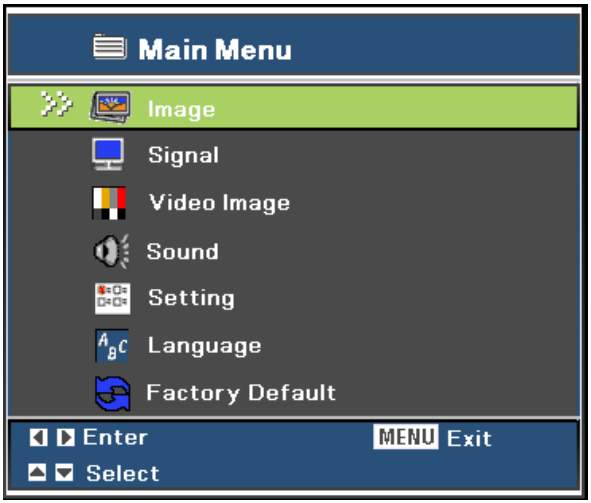

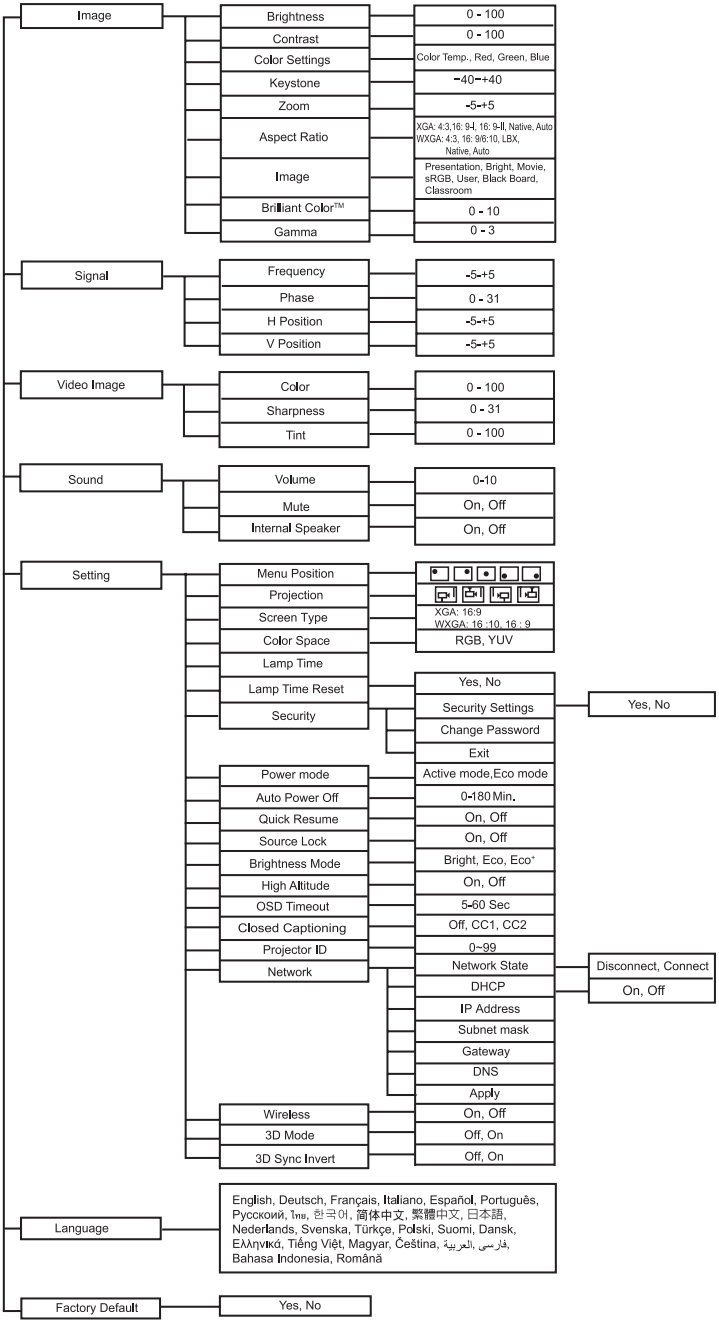
Image
Brightness
0 - 100
Contrast
0 - 100
Color Settings
Color Temp., Red, Green, Blue
Keystone
-40~+40
Zoom
-5~+5
Aspect Ratio
XGA: 4:3,16: 9-I, 16: 9-II, Native, Auto
WXGA: 4:3, 16: 9/6:10, LBX, Native, Auto
Image
Presentation, Bright, Movie, sRGB, User, Black Board, Classroom
Brilliant Color™
0 - 10
Gamma
0 - 3
Signal
Frequency
-5~+5
Phase
0 - 31
H Position
-5~+5
V Position
-5~+5
Video Image
Color
0 - 100
Sharpness
0 - 31
Tint
0 - 100
Sound
Volume
0~10
Mute
On, Off
Internal Speaker
On, Off
Setting
Menu Position
Projection
Screen Type
XGA: 16:9
WXGA: 16 :10, 16 : 9
Color Space
RGB, YUV
Lamp Time
Lamp Time Reset
Yes, No
Security
Security Settings
Yes, No
Change Password
Exit
Power mode
Active mode,Eco mode
Auto Power Off
0~180 Min.
Quick Resume
On, Off
Source Lock
On, Off
Brightness Mode
Bright, Eco, Eco+
High Altitude
On, Off
OSD Timeout
5~60 Sec
Closed Captioning
Off, CC1, CC2
Projector ID
0~99
Network
Network State
Disconnect, Connect
DHCP
On, Off
IP Address
Subnet mask
Gateway
DNS
Apply
Wireless
On, Off
3D Mode
Off, On
3D Sync Invert
Off, On
Language
English, Deutsch, Français, Italiano, Español, Português, Русский, ไทย, 한국어, 简体中文, 繁體中文, 日本語, Nederlands, Svenska, Türkçe, Polski, Suomi, Dansk, Ελληνικά, Tiếng Việt, Magyar, Čeština, العربية, فارسی, Bahasa Indonesia, Română
Factory Default
Yes, No

Image

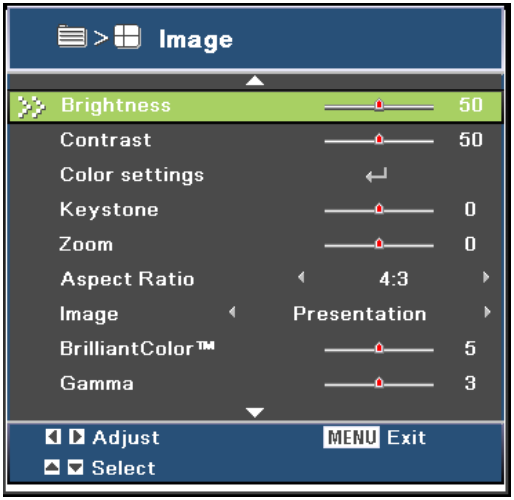

Brightness
Brighten or darken the image.

Contrast
Set the difference between light and dark areas.

Color Settings
Adjust the color temperature. At higher temperature the screen looks colder; at lower temperature, the screen looks warmer. If you select “User”, then you can change the intensity of each of 3 color (Red, Green, Blue) to customize user color temperature.

Keystone
Manually correct distorted images resulting from an angled projection.

Zoom
Zoom in and out the images.

Aspect Ratio
Use this function to choose your desired aspect ratio.

For XGA models:

Source	480i/p	576i/p	1080i/p	720p	PC
4:3	1024x768 center				
16:9-I	1024x576 center				
16: 9-II	1024x614 center(show 1024x768).				
Native	Displays the original image without any scaling.				
Auto(Default)	Automatically selects the appropriate display format.				

For WXGA models:
16:9 or 16:10 depend on “Screen Type” setting.
16:10 Screen

16 : 10 screen	480i/p	576i/p	1080i/p	720p	PC
4:3	1066 x800 center				
16:10	1280x800 center				
LBX	1280x960 center, then get the central 1280x800 image to display.				
Native	Displays the original image without any scaling.				
	1:1 mapping centered		1:1 mapping display 1280 x 800	1280x720 Centered	1:1 mapping centred
Auto (Default)	Automatically selects the appropriate display format.				

16:9 Screen

16 : 9 screen	480i/p	576i/p	1080i/p	720p	PC
4:3	960x720 center				
16:9	1280x720 center				
LBX	1280x960 center, then get the central 1280x720 image to display.				
Native	Displays the original image without any scaling.				
	1:1 mapping centered		1:1 mapping display 1280 x 720	1280x720 Centered	1:1 mapping centred
Auto (Default)	Automatically selects the appropriate display format.				

Image
There are many factory presets optimized for various types of images.

- Presentation: For computer or notebook.
- Bright: For bright environment.
- Movie: For home theater.
- sRGB: For PC standard color.
- User: Memorize user’s settings.
- Black Board: For black projection screen type.
- Classroom: For projection in the classroom.

BrilliantColor™
Adjusts the BrilliantColor™ value to extend the exposure range and sharpens detail for grain free images.

Gamma
Effect the represent of dark scenery. With greater gamma value, dark scenery will look brighter.

Note

- *When Economic Standby (<1W), VGA and audio loop through will not work in standby mode.*

Signal

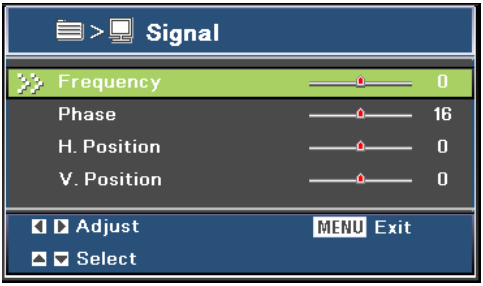

Frequency
Adjust the timing of the projector relative to the computer.

Phase
Adjust the phase of the projector relative to the computer.

H Position (Horizontal Position)
Adjust the image left or right within the projection area.

V Position (Vertical Position)
Adjust the image up or down within the projection area.

Video Image

Color
Adjust a video image from black and white to fully saturated color.

Sharpness
Sharpen or soften the image.

Tint
Shift colors toward red or green.

Sound

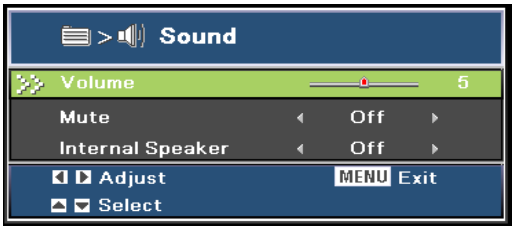

Volume
Adjust the volume level.

Mute
Cut off the sound temporarily.

Internal Speaker
Use the internal speaker of projector.

Setting

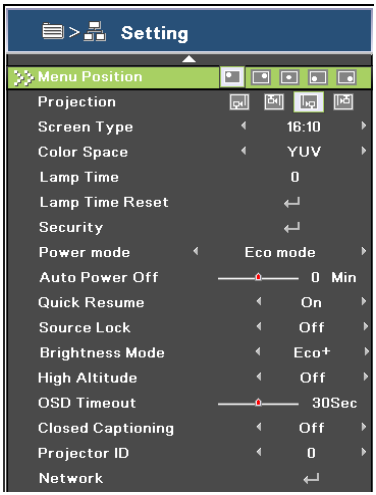

Menu Position

Choose the menu location on the display screen.

Projection

Adjust the picture to match the orientation of the projector: upright or upside-down, in front of or behind the screen. Invert or reverse the image accordingly.

Screen Type (for WXGA model only)

Choose the screen type from16:10 or 16:9.

Color Space

Select an appropriate color matrix type from RGB,YUV.

Lamp Time

Display the lamp's elapsed operating time (in hours).

Lamp Time Reset

Reset the lamp Hour to 0 hours.

Security

Turn on the projector with or without password verification. When the password function is added, image projection will require to input the preset password when turning on the projector. Pass-code default value is **"Right-Left-Down-Up"** (first time).

Power mode (standby)

Set whether the **VGA OUT** function works when the projector is in standby (powered off but connected to AC power).

- Eco mode: The **VGA OUT** function will not work when the projector is in standby.
- Active mode: The **VGA OUT** and **AUDIO OUT** functions will work when the projector is in standby.

Auto Power Off

Set the countdown timer interval. The countdown timer will start, when there is no signal being sent to the projector. Then projector will automatically power off when the countdown has finished (in minutes).

Quick Resume

If the projector is accidentally turned off, this feature allows the projector to be instantly powered on again within 100 seconds of power down.

Source Lock

- On: The projector will search specified connection port.
- Off: The projector will search for other signals if the current input signal is lost.

Brightness Mode

- Bright: Choose “Bright” to increase the brightness.
- Eco: Choose “Eco” to dim the projector lamp which will lower power consumption and extend the lamp life by up to 120%.
- Eco^+: Choose “Eco^+” to dim the projector lamp which will automatically detect the brightness level of the content and reduce lamp power consumption (up to 70 percent) during periods of inactivity.

High Altitude

Use this function to allow the fans operates at full speed continuously to achieve proper high altitude cooling of the projector.

OSD Timeout

Duration of OSD menu display countly starts (at idle state by second).

Closed Captioning

Enable or disable closed captioning by selecting CC1,CC2 or Off.

Projector ID

ID definition can be set up by menu (range 0~99), and allow user control an individual projector by RS232.

Network

Allow you to configure the LAN settings.

- Network State:Display the network connection status.
- DHCP: This protocol automatically assign IP Address to networked

devices.

- On: Assign an IP address to the projector from an external DHCP server automatically.
- Off: Assign an IP address manually.

- IP Address: Select an IP address.
- Subent mask: Select subnet mask number.
- Gateway: Select the default gateway of the network connected to the projector.
- DNS: Select DNS number.
- Apply: Press "↵" and then choose "Yes" to apply the selection.

Wireless

This setting is only for wireless module use.
Wireless is only functional with VGA 1 connector.

3D Mode

- On: Enable 3D Mode function.
- Off: Disable 3D Mode function.

When 3D Sync is set to "On", the settings for input source or broadcast device are required as below:

1. For S-VIDEO and VIDEO input source, signal type should be NTSC (60).
2. For computer input source, the hardware and software requirements should be Windows 7 operating system, 3D videos and professional 3D video player softwares. Computer's output frequency should be 120Hz and display card should be higher than NVIDIA 9800.

3D Sync Invert

- On: Invert left and right frame contents.
- Off: Default frame contents.

Language

Select the language used by the on-screen menu.

Factory Default

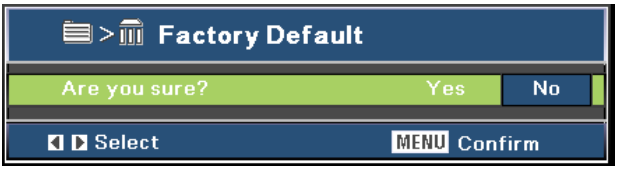

Restore settings to factory default .

Use web browser to control your projector

1. Turn on DHCP to allow the DHCP server to automatically assign an IP, or manually enter the required network information.

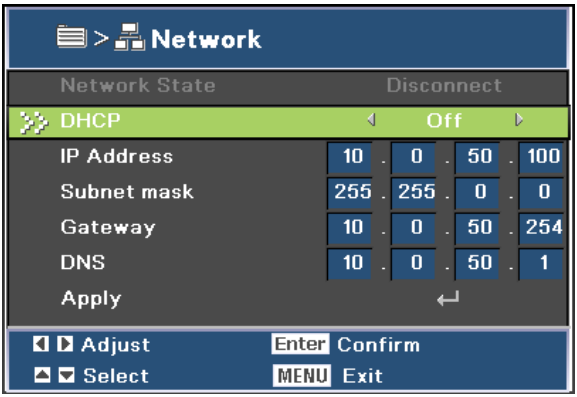

2. Then choose apply and press "↵" button to complete the configuration process.
3. Open your web browser and type in the projector's IP address from the OSD LAN screen. The following web page will display as below:

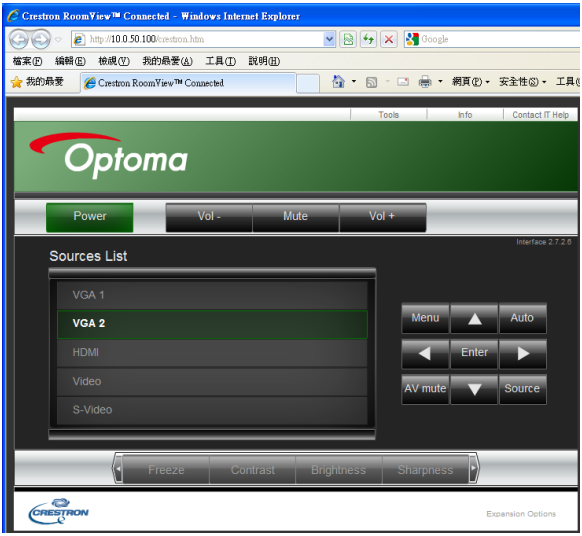

- When you used the projector IP address, you will can not link to your service server.

4. The crestron control settings can be found in the [tools] tab.(see picture) Please note, each field can only contain a limited number of characters, as shown in the table below. (spaces and the other punctuation included):

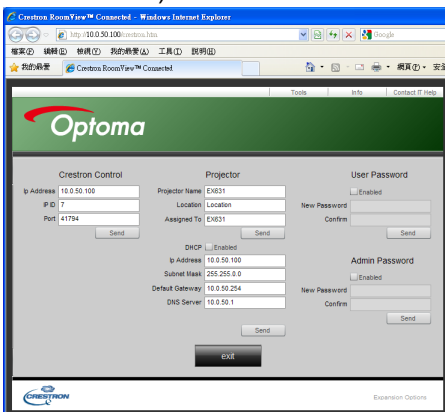

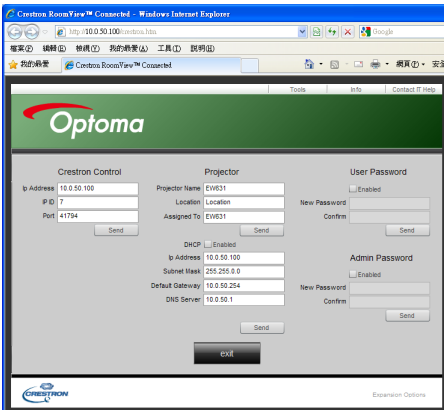

Category	Item	Input-Length (characters)
Crestron Control	IP Address	15
	IP ID	2
	Port	5
Projector	Projector Name	10
	Location	9
	Assigned To	9
Network Configuration	DHCP (Enabled)	(N/A)
	IP Address	15
	Subnet Mask	15
	Default Gateway	15
	DNS Server	15
User Password	Enabled	(N/A)
	New Password	15
	Confirm	15
Admin Password	Enabled	(N/A)
	New Password	15
	Confirm	15

Connect you computer to the projector

1. Find an IP Address (10.0.50.100) from LAN function of projector.

2. Select "Apply" and press "Enter" button to submit function or press "MENU" key to exit.
3. To open Network Connections, click **Start**, click **Control Panel**, click **Network and Internet Connections**, and then click **Network Connections**. Click the connection you want to configure, and then, under **Network Tasks** , click **Change settings of this connection**.
4. On the General tab, under This connection uses the following items, click Internet Protocol (TCP/IP), and then click "Properties".

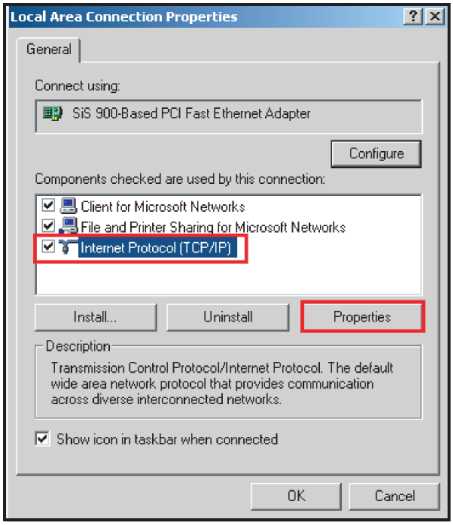

5. Click Use the following IP address, and type in as below:.
   - IP address:10.0.50.101
   - Subnet mask:255.0.0.0
   - Default gateway:10.0.50.254

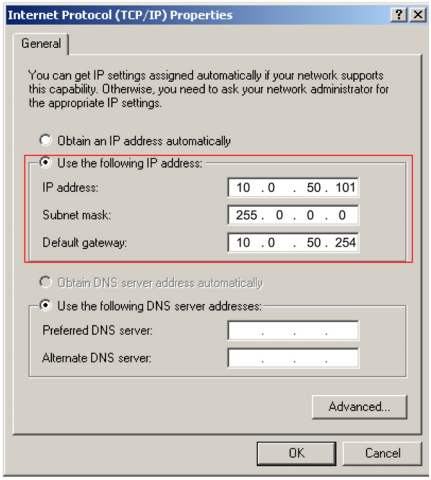

6. To open Internet Options, click IE web browser, click Internet Options, click the **Connections tab** and click "LAN Settings...".

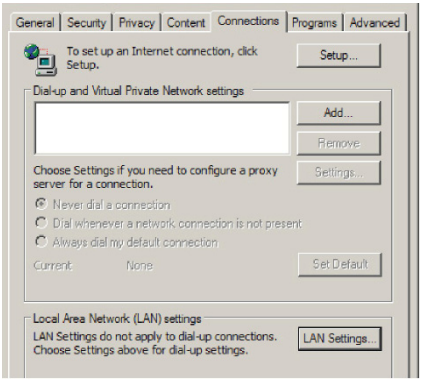

7. The Local Area Network (LAN) Setting dialog box appears, In the Proxy Server area, cancel the Use a proxy server for your LAN check box., then click "OK" button twice.

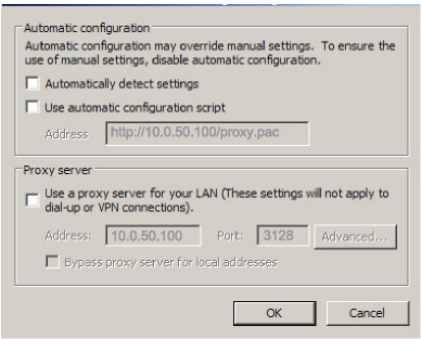

8. Open your IE and type in the IP address of 10.0.50.100 in the URL then press "Enter" key.

Crestron RoomView Control Tool

Crestron RoomView™ provides a central monitoring station for 250+ control systems on a single Ethernet network (more are possible. the number depends on the combination of IP ID and IP address). Crestron RoomView monitors each projector, including projector's online status, system power, lamp life, network setting and hardware faults, plus any custom attribute as defined by the Administrator. The Administrator can add, delete, or edit room information, contact information and events, which are logged automatically by the software for all users.(Operation UI as following image)

1. Main Screen

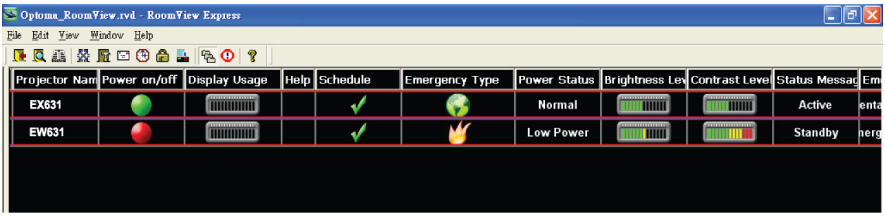

- Crestron RoomView function support is dependent on models.

2. Edit Room

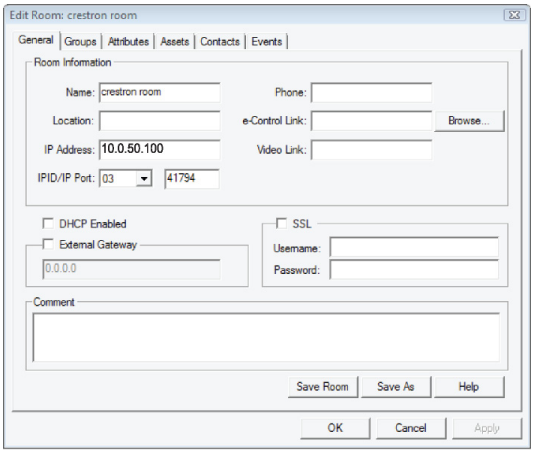

3. Edit Attribute

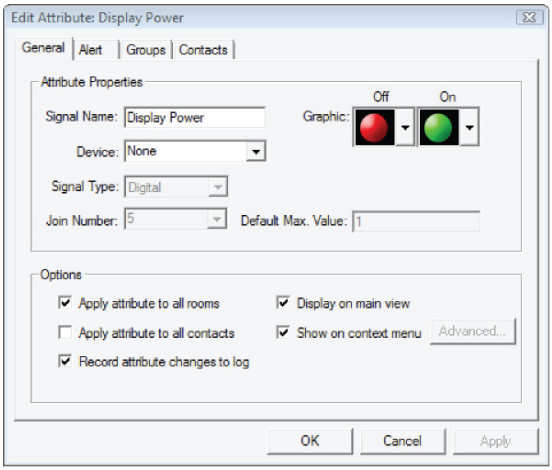

4. Edit Event

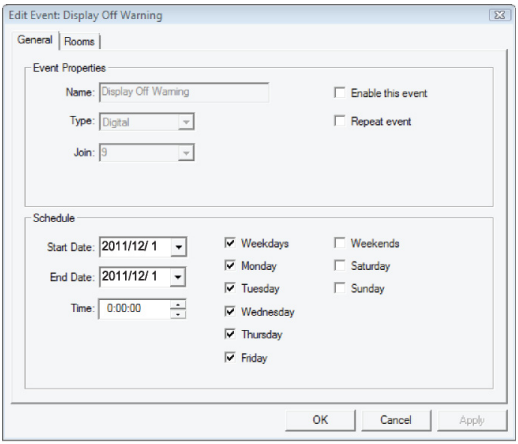

- For more information, please visit http://www.crestron.com & www.crestron.com/getrommview.

Appendix

Replacing the Lamp

As the projector operates over time, the brightness of the projector lamp gradually decreases and the lamp becomes more susceptible to breakage. We recommend replacing the lamp if a warning message is displayed. Do not attempt to replace the lamp yourself. Contact the qualified service personnel for replacement.

Note

- *The lamp is extremely hot right after turning off the projector. If you touch the lamp, you may scald your finger. When you replace the lamp, wait for at least 45 minutes for the lamp to cool down.*
- *Do not touch the lamp glass at any time. The lamp may explode due to improper handling, including the touching of the lamp glass.*
- *Lamp lifetime may differ from lamp to lamp and according to the environment of use. There is no guarantee of the same lifetime for each lamp. Some lamps may fail or terminate their lifetime in a shorter period of time than other similar lamps.*
- *A lamp may explode as a result of vibration, shock or degradation as a result of hours of use as its lifetime draws to an end. Risk of explosion may differ according to the environment or conditions in which the projector and lamp are being used.*
- *Wear protective gloves and eyeglasses when fixing or detaching the lamp.*
- *Faster on-off-cycles will damage the lamp and reduce lamp life. Wait at least for 5 minutes to turn off the projector after powering on.*
- *Do not operate the lamp in proximity to paper, cloth, or other combustible material nor cover it with such materials.*
- *Do not operate the lamp in an atmosphere containing an inflammable substance, such as thinner.*
- *Thoroughly ventilate the area or the room when operating the lamp in an oxygen atmosphere (in the air). If ozone is inhaled, it could cause headaches, nausea, dizziness, and other symptoms.*
- *The inorganic mercury is involved in the lamp. If the lamp bursts, the mercury inside the lamp will be exposed. Leave the area immediately if the lamp shatters while being operated and ventilate the area for at least 30 minutes in order to avoid the inhalation of mercury fumes. Otherwise it could be harmful to user's health.*

1. Turn off the projector.
2. If the projector is installed in a ceiling mount, remove it
3. Unplug the power cord.
4. Remove the screw in the side of the lamp cover. 1
5. Remove the cover. 2
6. Loosen the screws from the lamp module. 3
7. Raise the handle, and lift out the module. 4
8. Insert the new lamp module into the projector and tighten the screws.
9. Replace the lamp cover and tighten the screw.
10. Turn on the projector. If the lamp does not turn on after the warm-up period, try reinstalling the lamp.
11. Reset the lamp hour. Refer to the "**Setting > Lamp Time Reset**" menu.

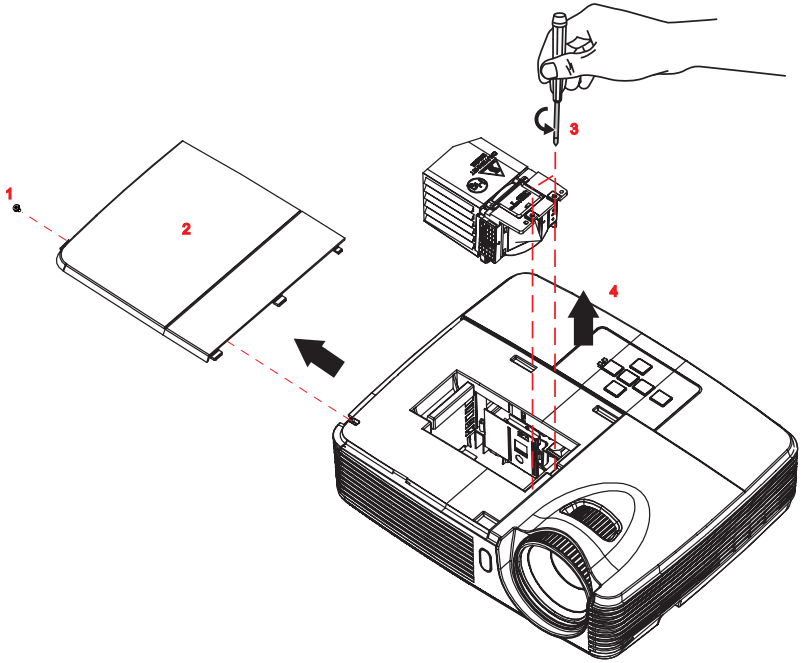

Note

- *Dispose the used lamp according to local regulations.*
- *Ensure that screws are tightened properly. Screws not tightened fully may result in injury or accidents.*
- *Since the lamp is made of glass, do not drop the unit and do not scratch the glass.*
- *Do not reuse the old lamp. This could cause the lamp to explode.*
- *Be sure to turn off the projector and unplug the AC power cord before replacing the lamp.*
- *Do not use the projector with the lamp cover removed.*

Ceiling mount installation

1. To prevent damage to your projector, please use the Optoma ceiling mount.
2. If you wish to use a third party ceiling mount kit, please ensure the screws used to attach a mount to the projector meet the following specifications:

- Screw type: M4*3
- Maximum screw length: 8mm
- Minimum screw length: 6mm

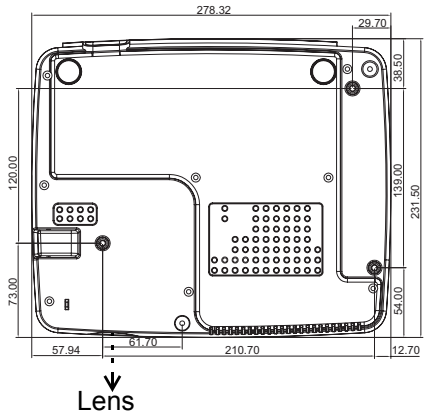

Unit: mm

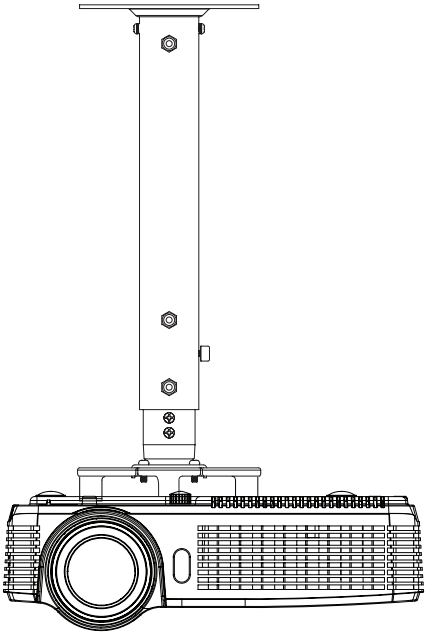

Note

- *Please note that damage resulting from incorrect installation will void the warranty.*

Warning

1.If you buy a ceiling mount from another company, please be sure to use the correct screw size. Screw size will vary depending on the thickness of the mounting plate.
2.Be sure to keep at least 10 cm gap between the ceiling and the bottom of the projector.
3.Avoid installing the projector near a heat source.

Compatibility Modes

Computer:

Mode	Resolution	H-Sync [KHz]	V-Sync [Hz]
	640 x 350	31.5	70
	640 x 350	37.9	85
	720 x 350	31.5	70
	640 x 400	31.5	70
	640 x 400	37.9	85.1
	720 x 400	31.5	70
	720 x 400	37.9	85
	720 x 576	-	50
	720 x 576	-	60
VGA	640 x 480	31.5	60
		-	67
		37.9	72.8
		37.5	75
		43.3	85
SVGA	800 x 600	35.2	56.3
		37.9	60.3
		46.9	75
		48.1	72.2
		-	80
		53.7	85.1
	832 x 624	-	72
	832 x 624	-	75
	1024 x 576	-	50
	1024 x 576	-	60
XGA	1024 x 768	48.4	60
		56.5	70.1
		57.7	72
		60	75
		68.7	85
	1152 x 864	-	60
		-	70
		-	75
		-	85
	1152 x 870	-	75
HD720	1280 x 720	-	50

HD720	1280 x 720	-	60
HD720	1280 x 720	-	75
HD720	1280 x 720	-	85
WXGA	1280 x 768	47.4	60
		-	75
		-	85
WXGA-800	1280 x 800	-	60
SXGA	1280 x 960	-	60
SXGA	1280 x 1024	64	60
		80	75
		91.1	85
	1366 x 768	-	60
	1440 x 900	55.935	60
SXGA+	1400 x 1050	-	60
UXGA	1600 x 1200	75	60
HDTV	1920 x 1080	33.8	30
	1920 x 1080	28.1	25
	1920 x 1080i	-	50
	1920 x 1080i	-	60
	1920 x 1080p	-	24
	1920 x 1080p	-	25
	1920 x 1080p	-	30
	1920 x 1080p	-	50
	1920 x 1080p	-	60
	1280 x 720	45	60
	1280 x 720p	-	50
	1280 x 720p	-	60
SDTV	720 x 576	31.3	50
	720 x 576i	-	50
	720 x 576p	-	50
	720 x 480	31.5	60
	720 x 480i	-	60
	720 x 480p	-	60

Video:

NTSC	NTSC M/J, 3.58MHz, 4.43MHz
PAL	PAL B/D/G/H/I/M/N, 4.43MHz
SECAM	SECAM B/D/G/K/K1/L, 4.25/4.4 MHz
Component	480i/p, 576i/p, 720p(50/60Hz), 1080i(50/60Hz) 1080P(24/25/30/50/60Hz)
SDTV	480i/p, 576i/p
HDTV	720p(50/60Hz), 1080i(50/60Hz), 1080P(24/25/30/50/60Hz)

RS232 Commands and Protocol Function List

RS232 Pin Assignments

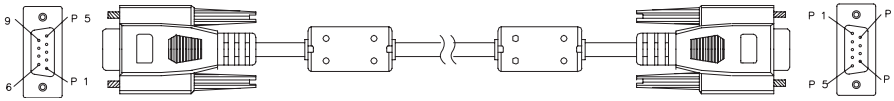

D-Sub 9 pin

1	1 CD
2	RXD
3	TXD
4	DTR
5	GND
6	DSR
7	RTS
8	CTS
9	RI

Wire List

C1	COLOR	C2
1	Black	1
2	Brown	2
3	Red	3
4	Orange	4
5	Yellow	5
6	Green	6
7	Blue	7
8	Purple	8
9	White	9
SHELL	DW	SHELL

RS232 Protocol Function List

Baud Rate : 9600
Data Bits: 8
Parity: None
Stop Bits: 1
Flow Control : None
UART16550 FIFO: Disable
Projector Return (Pass): P
Projector Return (Fail): F

XX=01-99, projector's ID,
XX=00 is for all projectors

Note

- *There is a <CR> after all ASCII commands.*
- *0D is the HEX code for <CR> in ASCII code.*

SEND to projector				
232 ASCII Code	**HEX Code**	**Function**		**Description**
~XX00 1	7E 30 30 30 30 20 31 0D	Power ON		
~XX00 0	7E 30 30 30 30 20 30 0D	Power OFF		(0/2 for backward compatible)
~XX00 1 ~abcd	7E 30 30 30 30 20 31 20 a 0D	Power ON with Password		a, b, c, and d belong to{1,2,3,4}
	(Password only support Up/Down/Left/Right)			
~XX01 1	7E 30 30 30 31 20 31 0D	Resync		
~XX02 1	7E 30 30 30 32 20 31 0D	AV Mute	On	
~XX02 0	7E 30 30 30 32 20 30 0D		Off (0/2 for backward compatible)	
~XX03 1	7E 30 30 30 33 20 31 0D	Mute	On	
~XX03 0	7E 30 30 30 33 20 30 0D		Off (0/2 for backward compatible)	
~XX04 1	7E 30 30 30 34 20 31 0D	Freeze		
~XX04 0	7E 30 30 30 34 20 30 0D	Unfreeze	(0/2 for backward compatible)	
~XX05 1	7E 30 30 30 35 20 31 0D	Zoom Plus		
~XX06 1	7E 30 30 30 36 20 31 0D	Zoom Minus		
~XX12 1	7E 30 30 31 32 20 35 0D	Direct Source Commands	HDMI	
~XX12 5	7E 30 30 31 32 20 35 0D		VGA 1	
~XX12 6	7E 30 30 31 32 20 35 0D		VGA 2	
~XX12 8	7E 30 30 31 32 20 38 0D		VGA 1 Component	
~XX12 9	7E 30 30 31 32 20 39 0D		S-Video	
~XX12 10	7E 30 30 31 32 20 31 30 0D		Video	
~XX12 13	7E 30 30 31 32 20 31 33 0D		VGA 2 Component	
~XX20 0	7E 30 30 32 30 20 30 0D	Display Mode	None	
~XX20 1	7E 30 30 32 30 20 31 0D		Presentation	
~XX20 2	7E 30 30 32 30 20 32 0D		Bright	
~XX20 3	7E 30 30 32 30 20 33 0D		Movie	
~XX20 4	7E 30 30 32 30 20 34 0D		sRGB	
~XX20 5	7E 30 30 32 30 20 35 0D		User	
~XX20 7	7E 30 30 32 30 20 37 0D		Blackboard	
~XX20 8	7E 30 30 32 30 20 38 0D		Classroom	
~XX21 n	7E 30 30 32 31 20 a 0D	Brightness		n = 0 (a=30) ~ 100 (a=31 30 30)
~XX22 n	7E 30 30 32 32 20 a 0D	Contrast		n = 0 (a=30) ~ 100 (a=31 30 30)
~XX23 n	7E 30 30 32 33 20 a 0D	Sharpness		n = 0 (a=30) ~ 31 (a=33 31)
~XX24 n	7E 30 30 32 34 20 a 0D	Color Settings	Red Gain	n = 0 (a=2D 35 30) ~ 100 (a=35 30)
~XX25 n	7E 30 30 32 35 20 a 0D		Green Gain	n = 0 (a=2D 35 30) ~ 100 (a=35 30)
~XX26 n	7E 30 30 32 36 20 a 0D		Blue Gain	n = 0 (a=2D 35 30) ~ 100 (a=35 30)
~XX34 n	7E 30 30 33 34 20 a 0D	BrilliantColor™		n = 0 (a=30) ~ 10 (a=31 30)
~XX35 1	7E 30 30 33 35 20 31 0D	Gamma	0	
~XX35 2	7E 30 30 33 35 20 32 0D		1	
~XX35 3	7E 30 30 33 35 20 33 0D		2	
~XX35 4	7E 30 30 33 35 20 34 0D		3	
~XX36 1	7E 30 30 33 36 20 31 0D	Color Temp.	Warm	
~XX36 2	7E 30 30 33 36 20 32 0D		Medium	
~XX36 3	7E 30 30 33 36 20 33 0D		Cold	
~XX37 2	7E 30 30 33 37 20 32 0D	Color Space	RGB	
~XX37 3	7E 30 30 33 37 20 33 0D		YUV	
~XX45 n	7E 30 30 34 34 20 a 0D	Color (Saturation)		n = 0 (a=30) ~ 100 (a=31 30 30)
~XX44 n	7E 30 30 34 35 20 a 0D	Tint		n = 0 (a=30) ~ 100 (a=31 30 30)
~XX60 1	7E 30 30 36 30 20 31 0D	Aspect Ratio	4:3	
~XX60 2	7E 30 30 36 30 20 32 0D		16:9-I(XGA)	

~XX60 3	7E 30 30 36 30 20 33 0D		16:9-II (XGA)/16:9 or 16:10 (WXGA)	
~XX60 5	7E 30 30 36 30 20 35 0D		LBX (WXGA)	
~XX60 6	7E 30 30 36 30 20 36 0D		Native	
~XX60 7	7E 30 30 36 30 20 37 0D		Auto	
~XX62 n	7E 30 30 36 32 20 a 0D	Zoom		n = -5 (a=2D 35) ~ 5 (a=35)
~XX66 n	7E 30 30 36 36 20 a 0D	V Keystone		n = -40 (a=2D 33 30) ~ 40 (a=34 30)
~XX230 1	7E 30 30 32 33 30 20 31 0D	3D Mode		DLP-Link
~XX230 0	7E 30 30 32 33 30 20 30 0D	3D Mode		Off
~XX231 1	7E 30 30 32 33 31 20 31 0D	3D Sync Invert		On
~XX231 0	7E 30 30 32 33 31 20 30 0D	3D Sync Invert		Off
~XX70 1	7E 30 30 37 30 20 31 0D	Language	English	
~XX70 2	7E 30 30 37 30 20 32 0D		German	
~XX70 3	7E 30 30 37 30 20 33 0D		French	
~XX70 4	7E 30 30 37 30 20 34 0D		Italian	
~XX70 5	7E 30 30 37 30 20 35 0D		Spanish	
~XX70 6	7E 30 30 37 30 20 36 0D		Portuguese	
~XX70 7	7E 30 30 37 30 20 37 0D		Polish	
~XX70 8	7E 30 30 37 30 20 38 0D		Dutch	
~XX70 9	7E 30 30 37 30 20 39 0D		Swedish	
~XX70 10	7E 30 30 37 30 20 31 30 0D		Norwegian/Danish	
~XX70 11	7E 30 30 37 30 20 31 31 0D		Finnish	
~XX70 12	7E 30 30 37 30 20 31 32 0D		Greek	
~XX70 13	7E 30 30 37 30 20 31 33 0D		Traditional Chinese	
~XX70 14	7E 30 30 37 30 20 31 34 0D		Simplified Chinese	
~XX70 15	7E 30 30 37 30 20 31 35 0D		Japanese	
~XX70 16	7E 30 30 37 30 20 31 36 0D		Korean	
~XX70 17	7E 30 30 37 30 20 31 37 0D		Russian	
~XX70 18	7E 30 30 37 30 20 31 38 0D		Hungarian	
~XX70 19	7E 30 30 37 30 20 31 39 0D		Czech	
~XX70 20	7E 30 30 37 30 20 32 30 0D		Arabic	
~XX70 21	7E 30 30 37 30 20 32 31 0D		Thai	
~XX70 22	7E 30 30 37 30 20 32 32 0D		Turkish	
~XX70 23	7E 30 30 37 30 20 32 33 0D		Farsi	
~XX70 25	7E 30 30 37 30 20 32 35 0D		Vietnamese	
~XX70 26	7E 30 30 37 30 20 32 36 0D		Indonesian	
~XX70 27	7E 30 30 37 30 20 32 37 0D		Romanian	
~XX71 1	7E 30 30 37 31 20 31 0D	Projection	Front-Desktop	
~XX71 2	7E 30 30 37 31 20 32 0D		Rear-Desktop	
~XX71 3	7E 30 30 37 31 20 33 0D		Front-Ceiling	
~XX71 4	7E 30 30 37 31 20 34 0D		Rear-Ceiling	
~XX72 1	7E 30 30 37 32 20 31 0D	Menu Location	Top Left	
~XX72 2	7E 30 30 37 32 20 32 0D		Top Right	
~XX72 3	7E 30 30 37 32 20 33 0D		Centre	
~XX72 4	7E 30 30 37 32 20 34 0D		Bottom Left	
~XX72 5	7E 30 30 37 32 20 35 0D		Bottom Right	
~XX90 1	7E 30 30 39 31 20 31 0D	Screen Type (WXGA only)	16:10	
~XX900	7E 30 30 39 31 20 30 0D		16:9	
~XX73 n	7E 30 30 37 33 20 a 0D	Signal	Frequency	n = -5 (a=2D 35 30) ~ 5 (a=35 30) By signal
~XX74 n	7E 30 30 37 34 20 a 0D		Phase	n = 0 (a=30) ~ 31 (a=33 31) By signal
~XX75 n	7E 30 30 37 35 20 a 0D		H. Position	n = -5 (a=2D 35) ~ 5 (a=35) By timing
~XX76 n	7E 30 30 37 36 20 a 0D		V. Position	n = -5 (a=2D 35) ~ 5 (a=35) By timing
~XX78 1	7E 30 30 37 38 20 31 0D		Security Settings	Enable
~XX78 0	7E 30 30 37 38 20 32 0D			Disable(0/2 for backward compatible)
~XX80 1	7E 30 30 38 30 20 31 0D	Mute	On	
~XX80 0	7E 30 30 38 30 20 30 0D		Off (0/2 for backward compatible)	
~XX81 n	7E 30 30 38 31 20 a 0D	Volume	n = 0 (a=30) ~ 10 (a=32 30)	
~XX88 0	7E 30 30 38 38 20 30 0D	Closed Captioning	Off	
~XX88 1	7E 30 30 38 38 20 31 0D		cc1	
~XX88 2	7E 30 30 38 38 20 32 0D		cc2	
~XX100 1	7E 30 30 31 30 30 20 31 0D	Source Lock	On	
~XX100 0	7E 30 30 31 30 30 20 30 0D		Off (0/2 for backward compatible)	
~XX100 3	7E 30 30 31 30 30 20 33 0D	Next Source		
~XX101 1	7E 30 30 31 30 31 20 31 0D	High Altitude	On	
~XX101 0	7E 30 30 31 30 31 20 30 0D		Off (0/2 for backward compatible)	
~XX106 n	7E 30 30 31 30 36 20 a 0D	Auto Power Off (min)		n = 0 (a=30) ~ 180 (a=31 38 30)
~XX114 1	7E 30 30 31 31 34 20 31 0D			Power mode (Standby) Active
~XX114 0	7E 30 30 31 31 34 20 30 0D			Power mode (Standby) Eco (0/2 for backward compatible)
~XX115 1	7E 30 30 31 31 35 20 31 0D	Quick Resume	On	
~XX115 0	7E 30 30 31 31 35 20 31 0D	Quick Resume	Off(0/2 for backward compatible)	

~XX110 1	7E 30 30 31 31 30 20 31 0D		Brightness Mode	Bright
~XX110 0	7E 30 30 31 31 30 20 30 0D			Eco (0/2 for backward compatible)
~XX110 3	7E 30 30 31 31 30 20 33 0D			Eco+
~XX111 1	7E 30 30 31 31 31 20 31 0D		Lamp Reset	Yes
~XX111 0	7E 30 30 31 31 31 20 30 0D			No (0/2 for backward compatible)
~XX112 1	7E 30 30 31 31 32 20 31 0D	Reset		Yes
~XX99 1	7E 30 30 39 39 20 31 0D	RS232 Alert Reset	Reset System Alert	
SEND to emulate Remote				
~XX140 1	7E 30 30 31 34 30 20 31 0D			Power
~XX140 3	7E 30 30 31 34 30 20 33 0D			Remote Mouse Up
~XX140 4	7E 30 30 31 34 30 20 34 0D			Remote Mouse Left
~XX140 5	7E 30 30 31 34 30 20 35 0D			Remote Mouse Enter
~XX140 6	7E 30 30 31 34 30 20 36 0D			Remote Mouse Right
~XX140 7	7E 30 30 31 34 30 20 37 0D			Remote Mouse Down
~XX140 8	7E 30 30 31 34 30 20 38 0D			Mouse Left Click
~XX140 9	7E 30 30 31 34 30 20 39 0D			Mouse Right Click
~XX140 10	7E 30 30 31 34 30 20 31 30 0D			Up/Page +
~XX140 11	7E 30 30 31 34 30 20 31 31 0D			Left/Source
~XX140 12	7E 30 30 31 34 30 20 31 32 0D			Enter (for projection MENU)
~XX140 13	7E 30 30 31 34 30 20 31 33 0D			Right/Re-SYNC
~XX140 14	7E 30 30 31 34 30 20 31 34 0D			Down/Page -
~XX140 15	7E 30 30 31 34 30 20 31 35 0D			Keystone +
~XX140 16	7E 30 30 31 34 30 20 31 36 0D			Keystone -
~XX140 17	7E 30 30 31 34 30 20 31 37 0D			Volume -
~XX140 18	7E 30 30 31 34 30 20 31 38 0D			Volume +
~XX140 19	7E 30 30 31 34 30 20 31 39 0D			Brightness (1)
~XX140 20	7E 30 30 31 34 30 20 32 30 0D			Menu (2)
~XX140 21	7E 30 30 31 34 30 20 32 31 0D			3D (3)
~XX140 22	7E 30 30 31 34 30 20 32 32 0D			HDMI (4)
~XX140 23	7E 30 30 31 34 30 20 32 33 0D			Freeze (5)
~XX140 24	7E 30 30 31 34 30 20 32 34 0D			AV Mute (6)
~XX140 25	7E 30 30 31 34 30 20 32 35 0D			S-Video (7)
~XX140 26	7E 30 30 31 34 30 20 32 36 0D			VGA1/2 toggle (8)
~XX140 27	7E 30 30 31 34 30 20 32 37 0D			Video (9)
~XX140 28	7E 30 30 31 34 30 20 32 38 0D			Switch to USB mouse
SEND from projector automatically				
232 ASCII Code	HEX Code	Function	Projector Return	Description
when Standby/Warming/Cooling/Out of Range/Lamp fail/			INFOn	n : 0/1/2/3/4/6/7/8/9 = Standby/Warming/ Cooling/Out of Range/Lamp fail/
Fan Lock/Over Temperature/Lamp Hours Running Out/Cover Open				Fan Lock/Over Temperature/Lamp Hours Running Out/Cover Open
READ from projector				
232 ASCII Code	HEX Code	Function	Projector Return	Description
~XX121 1	7E 30 30 31 32 31 20 31 0D	Input Source Commands	OKn	n : 0/1/2/3/4/5 = None/VGA1/VGA2/S-Video/ Video/HDMI
~XX122 1	7E 30 30 31 32 32 20 31 0D	Sofware Version	OKdddd	dddd: FW version
~XX123 1	7E 30 30 31 32 33 20 31 0D	Display Mode	OKn	n : 0/1/2/3/4/5/7/8/9/None/Presentation/Bright/ Movie/sRGB/User/Blackboard/Classroom/3D
~XX124 1	7E 30 30 31 32 34 20 31 0D	Power State	OKn	n : 0/1 = Off/On
~XX125 1	7E 30 30 31 32 35 20 31 0D	Brightness	OKn	
~XX126 1	7E 30 30 31 32 36 20 31 0D	Contrast	OKn	
~XX127 1	7E 30 30 31 32 37 20 31 0D	Aspect Ratio	OKn	(XGA) n: 0/1/2/3/4 = 4:3/16:9-I/16:9-II/Native/AUTO (WXGA) n: 0/1/2/3/4 = 4:3/16:9 or 16:10 */LBX/ Native/AUTO *16:9 or 16:10 depend on Screen Type setting
~XX128 1	7E 30 30 31 32 38 20 31 0D	Color Temperature	OKn	n: 0/1/2=Warm/Medium/Cold
~XX129 1	7E 30 30 31 32 39 20 31 0D	Projection Mode	OKn	n : 0/1/2/3 = Front-Desktop/ Rear-Desktop/ Front-Ceiling/ Rear-Ceiling
~XX150 1	7E 30 30 31 35 30 20 31 0D	Information	OKabbbbccdddde	
				a : 0/1 = Off/On
				bbbb: LampHour
				c: source 00/01/02/03/04/05 = None/VGA1/ VGA2/S-Video/Video/HDMI
				dddd: FW version
				e : Display mode 0/1/2/3/4/5/7/8/9
				None/Presentation/Bright/Movie/sRGB/User/ Blackboard/Classroom/3D
~XX151 1	7E 30 30 31 35 31 20 31 0D	Model name	OKn	n:17/18 =XGA model/WXGA model
~XX108 1	7E 30 30 31 30 38 20 31 0D	Lamp Hours	OKbbbb	bbbb: LampHour
~XX108 2	7E 30 30 31 30 38 20 31 0D	Cumulative Lamp Hours	OKbbbbb	bbbbb: (5 digits) Total Lamp Hours

Troubleshooting

Refer to the symptoms and measures listed below before sending the projector for repairs. If the problem persists, contact your local reseller or service center. Please refer to "LED Indicator Messages" as well.

Start-up problems

If no lights turn on:

- Be sure that the power cord is securely connected to the projector and the other end is plugged into an outlet with power.
- Press the power button again.
- Unplug the power cord and wait for a short while, then plug it in and press the power button again.

Image problems

If the searching source is displayed:

- Press **SOURCE** on the projector or **Source** on the remote control to select an active input source.
- Be sure the external source is turned on and connected.
- For a computer connection, ensure your notebook computer's external video port is turned on. Refer to the computer manual.

If the image is out of focus:

- While displaying the on-screen menu, adjust the focus ring. (The image size should not change; if it does, you are adjusting the zoom, not the focus.)
- Check the projection lens to see if it needs cleaning.

If the image is flickering or unstable for a computer connection:

- Press **MENU** on the projector or **Menu** on the remote control, go to **Signal** and adjust **Frequency** or **Tracking.**

Remote control problems

If the remote control does not operate:

- Be sure nothing is blocking the remote control receiver on the front of the projector. Use the remote control within the effective range.
- Aim the remote control at the screen or at the front of the projector.
- Move the remote control so it is more directly in front of the projector and not as far to the side.

LED Indicator Messages

Projector Status	POWER	TEMP	LAMP
Standby (Eco mode)	Blue solid	Off	Off
Standby (Active mode)	Blue flashing	Off	Off
Normal running mode	Flashing 30 seconds after powering on and then become solid blue	Off	Off
Normal cooling	Blue solid	Blue solid	Red solid
Lamp ignition failed	Blue solid	Off	Red flashing
Lamp life end	Blue solid	Off	Red solid
Temp error	Blue solid	Blue flashing	Off
Fan error	Blue solid	Blue solid	Off
Color wheel or DMD error	Blue flashing	Blue flashing	Red flashing
Quick resume	Blue flashing (0.25 sec off then 0.25 sec on for 100 sec.)	Off	Off
Eco+	Blue flashing	Blue flashing	Off

Optoma Global Offices

For service or support please contact your local office.

USA

3178 Laurelview Ct.
Fremont, CA 94538, USA
www.optomausa.com

☎ 888-289-6786
✉ services@optoma.com

Canada

5630 Kennedy Road, Mississauga,
ON, L4Z 2A9, Canada
www.optoma.ca

☎ 905-361-2582
🖷 905-361-2581
✉ services@optoma.com

Europe

42 Caxton Way, The Watford Business Park
Watford, Hertfordshire,
WD18 8QZ, UK
www.optoma.eu
Service Tel : +44 (0)1923 691865

☎ +44 (0) 1923 691 800
🖷 +44 (0) 1923 691 888
✉ service@tsc-europe.com

France

Batiment E
81-83 avenue Edouard Vaillant
92100 Boulogne Billancourt, France

☎ +33 1 41 46 12 20
🖷 +33 1 41 46 94 35
✉ savoptoma@optoma.fr

Spain

C/ Jose Hierro,36 Of. 1C
28522 Rivas VaciaMadrid,
Spain

☎ +34 91 499 06 06
🖷 +34 91 670 08 32

Deutschland

Wiesenstrasse 21 W
D40549 Dusseldorf,
Germany

☎ +49 (0) 211 506 6670
🖷 +49 (0) 211 506 66799
✉ info@optoma.de

Scandinavia

Lerpeveien 25
3040 Drammen
Norway
PO.BOX 9515
3038 Drammen
Norway

☎ +47 32 98 89 90
🖷 +47 32 98 89 99
✉ info@optoma.no

Latin America

3178 Laurelview Ct.
Fremont, CA 94538, USA
www.optoma.com.br

☎ 888-289-6786
www.optoma.com.mx

Korea

WOOMI TECH.CO.,LTD.
4F,Minu Bldg.33-14, Kangnam-Ku,
seoul,135-815, KOREA

☎ +82+2+34430004
🖷 +82+2+34430005

Japan

東京都足立区綾瀬 3-25-18
株式会社オーエス
コンタクトセンター：0120-380-495

✉ info@os-worldwide.com
www.os-worldwide.com

Taiwan

5F., No. 108, Minchiuan Rd.
Shindian City,
Taipei Taiwan 231, R.O.C.
www.optoma.com.tw

☎ +886-2-2218-2360
🖷 +886-2-2218-2313
✉ services@optoma.com.tw
asia.optoma.com

Hong Kong

Unit A, 27/F Dragon Centre,
79 Wing Hong Street,
Cheung Sha Wan,
Kowloon, Hong Kong

☎ +852-2396-8968
🖷 +852-2370-1222
www.optoma.com.hk

中国
上海市长宁区
凯旋路 1205 号 5 楼
琉璃奥图码

☎ +86-21-62947376
+86-21-62947375
www.optoma.com.cn

Regulation & Safety Notices

This appendix lists the general notices of your projector.

FCC Notice

This equipment has been tested and found to comply with the limits for a Class B digital device, pursuant to part 15 of the FCC Rules. These limits are designed to provide reasonable protection against harmful interference in residential installation. This equipment generates, uses and can radiate radio frequency energy and if not installed and used in accordance with the instructions, may cause harmful interference to radio communications.

However, there is no guarantee that interference will not occur in a particular installation. If this equipment does cause harmful interference to radio or television reception, detectable by turning the equipment in question off and on, the user is encouraged to try to correct the interference by one or more of the following measures:

- Reorient or relocate the receiving antenna
- Increase the distance between the equipment and the receiver
- Connect the equipment to an outlet on a different circuit than that which the receiver is connected to
- Or consult the dealer or an experienced radio/TV technician for help.

Notice: Shielded cables

All connections to other computing devices must be made using shielded cables to maintain compliance with FCC regulations.

Caution

Changes or modifications not expressly approved by the manufacturer could void the user’s authority, which is granted by the Federal Communications Commission, to operate this projector.

Operation conditions

This device complies with Part 15 of the FCC Rules. Operation is subject to the following two conditions:

1. This device may not cause harmful interference and
2. This device must accept any interference received, including interference that may cause undesired operation.

Notice: Canadian users

This Class B digital apparatus complies with Canadian ICES-003.

Remarque a l°¶intention des utilisateurs canadiens

Cet appareil numerique de la classe B est conforme a la norme NMB-003 du Canada.

Declaration of Conformity for EU countries

- EMC Directive 2004/108/EC (including amendments)
- Low Voltage Directive 2006/95/EC
- R & TTE Directive 1999/5/EC (if product has RF function)

Disposal instructions

Do not throw this electronic device into the trash when discarding. To minimize pollution and ensure utmost protection of the global environment, please recycle it.