myprojectorlamps.com

The most trusted, dependable name in projector lamp sales.

http://www.myprojectorlamps.com

http://www.myprojectorlamps.ca

http://www.myprojectorlamps.eu

The following projector manual has not been modified or altered in any way.

Contents

Important Information 3

Cleaning the TV 3

Using the Remote Control 4

How to Use the Remote Control 4

Cautions 4

Installing the Remote Control Batteries 4

The Front and Rear Panel 5

Connecting the TV

Connecting the Antenna or the Cable Converter Box 6

Connecting the VCR to Video Input 7

Connecting the DVD and the VCR 7

Connecting the DVD with Component Video and the VCR 8

Connecting the Camcorder or the Game Device 8

Connecting the Computer VGA Input 9

Connecting the Audio System 9

Connecting the VCR to Video Output 10

Connecting Two VCRs to Video Output 10

The Remote Control Functions 11

Basic Operation

Standby/On 12

Power Off 12

Selecting Channel 12

Volume Adjustment 12

Muting the Sound 12

Freezing the Screen 12

Switching between Two Channels 12

Selecting Video Input Source 12

On-Screen Display 12

Contents

Advanced Operation
Setting OFF-Timer (Sleep) 13
Setting Stereo, Mono or SAP Broadcast 13
Setting X-BASS System 13
Using the Surround Sound Feature 13
Watching Picture-In-Picture 13
Switching the Main and Second Picture 14
Menu 15
Menu Options 15
How to Program the Menus 16
Channel 17
Picture Video 17
Enhanced 17
Picture Data 17
Audio 18
PIP 18
Language 19
Misc 19
Troubleshooting 21
Specifications 22
Compatible Frequency Table 24
Accessories 25

Important Information

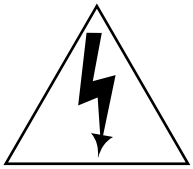

Caution: To reduce the risk of electric shock, refer servicing to qualified service personnel. Do NOT attempt to remove parts on your own.

Warning: To reduce the risk of electric shock and fire, DO NOT expose this appliance to rain or moisture.

- Place the TV on the floor or on a sturdy platform. The mounting surface should be flat and secure to prevent the TV from damage.
- Place the TV at a proper distance from the wall to allow ventilation and prevent the TV from overheating. Avoid dusty places as well.
- Do not put any heavy object on top of the TV.
- Do not stand or climb on the TV.
- For your safety, do not remove the back cover of the TV.
- Avoid exposing the TV to direct sunlight or the direct radiation of other heat sources. Putting the TV directly under sunlight will produce glare.
- If any foreign material or liquid leaks into the TV, unplug the AC cord and contact your dealer.
- Do not plug too many appliances into one outlet or leave the cords tangled up, rolled over by heavy objects or subjected to heat.
- Remove the power plug when the TV is left unused for a long period of time.
- If the TV emits smoke, unusual noise or strange odor, turn it off immediately and contact your dealer. It is dangerous to leave the TV on under such circumstances.
- For safety purpose, when you see the warning message as below, contact your dealer referred servicing to qualified service personnel to change the lamp as soon as possible.

  " Lamp is running out of standard lifetime. Be sure to replace the lamp as soon as possible."

Cleaning the TV

Make sure the TV is turned off before you clean it. Do not spray on the screen or the cabinet of TV directly.

❖ Cleaning the screen

- Wipe clean the screen with a clean, soft and unfuzzed cloth to remove dusts and other fine particles
- Wipe the screen with a clean lint free cloth to remove dust. To remove smears or stubborn marks use alcohol free glass cleaner.

❖ Cleaning the cabinet

- Use a soft dry cloth to wipe clean the cabinet.
- If the cabinet is not clean, add some alcohol-free, neutral, non-corrosive detergent to the cloth.

Using the Remote Control

How to Use the Remote Control

- Point the front of the remote control to the “remote control receiving” window at the lower margin of the TV and press the button desired.
- The remote control works within 7M (20 feet) from the TV.

Precautions

- Do not pour liquid on the remote control.
- Do not drop the remote control.
- Leave the remote control in a dry place at room temperature.
- When the remote control becomes less sensitive after a long time of use, replace the batteries.
- If you do not intend to use the remote control for more than one month, remove the batteries to prevent acid leak that will damage the remote control.
- If there is acid leak, clean it off and then install new batteries.
- Do not mix use new and used batteries or batteries of different types.

Installing the Batteries

- Slide the battery cover off the back of remote control.
- Install two “AAA” size alkaline batteries. Match the “ + ” and “ - ” signs on the batteries to those on the battery compartment.
- Slide the battery cover back onto the remote control until the lock snaps.

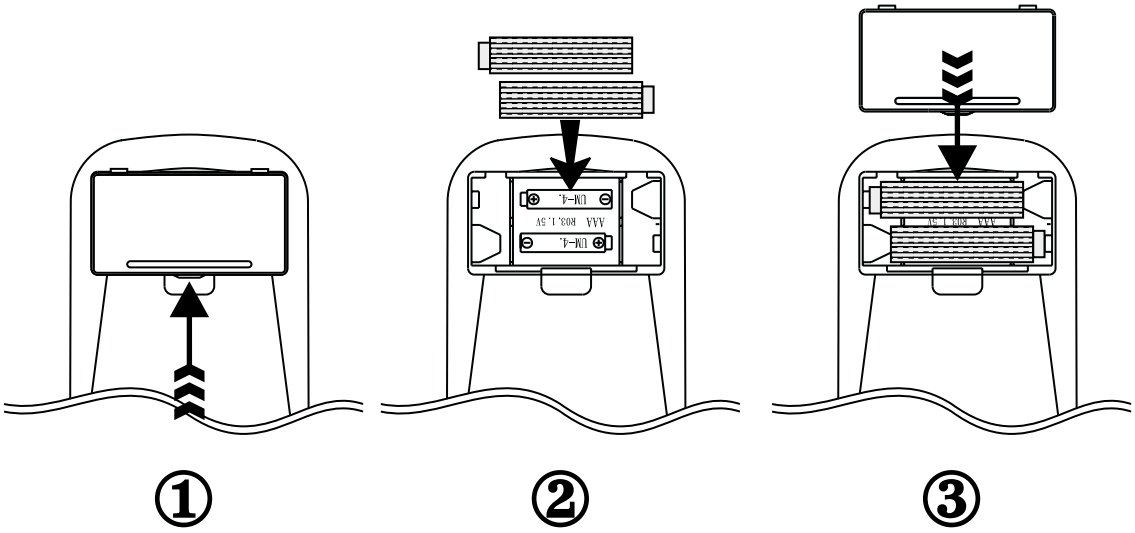

The Front and Rear Panel

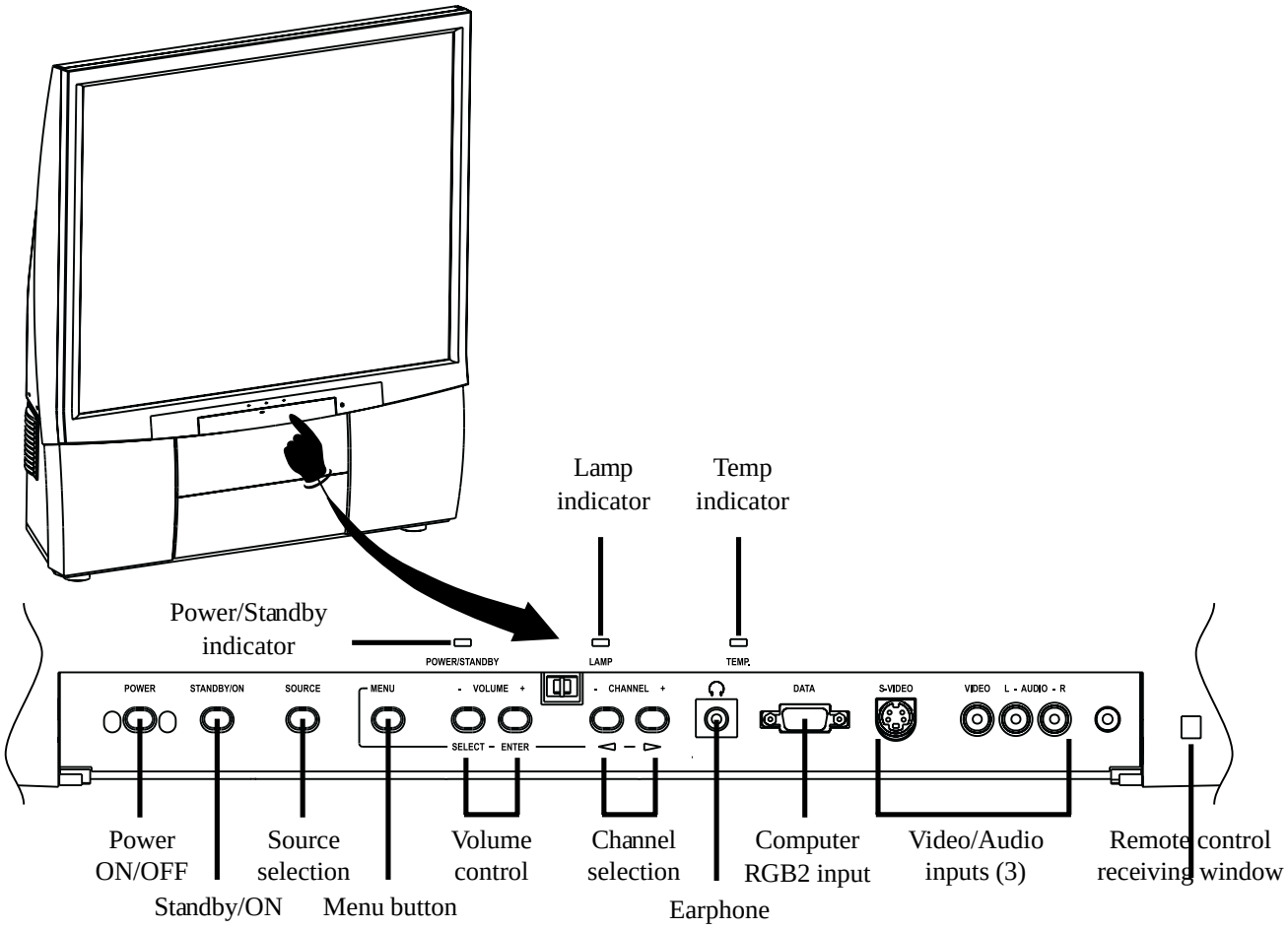

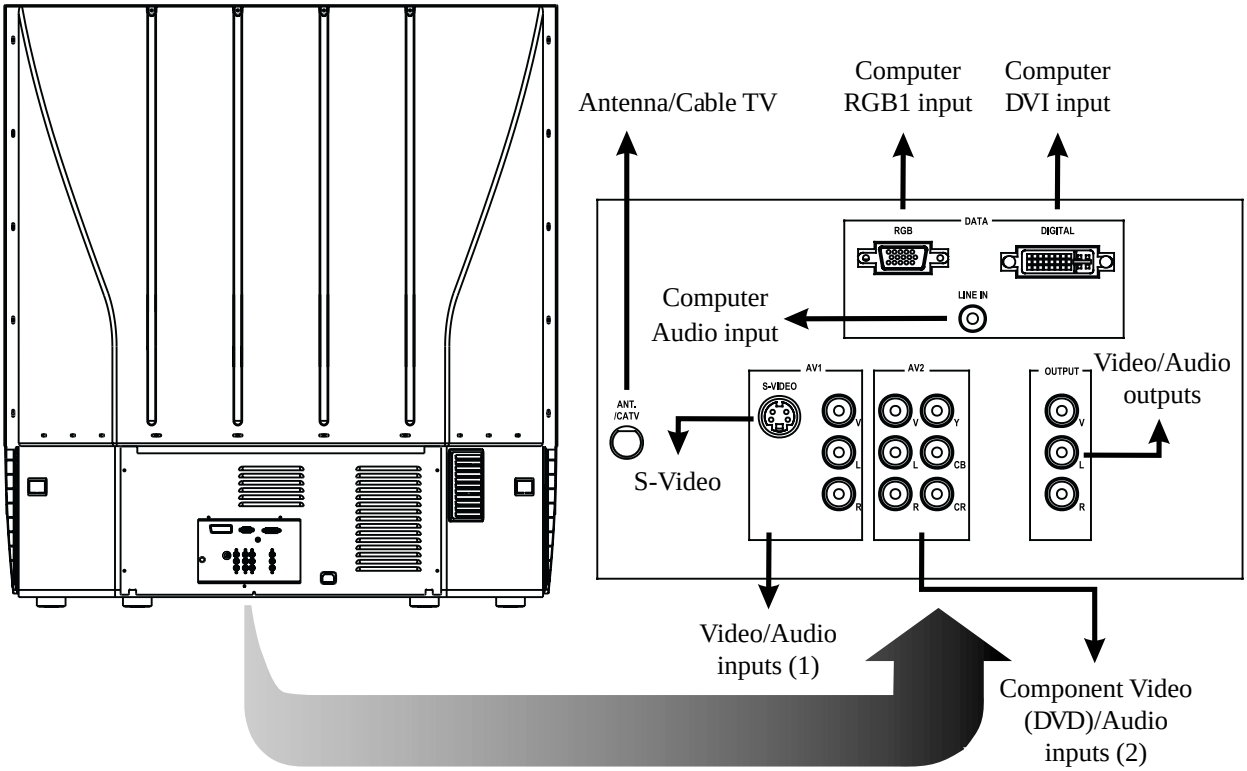

Connecting the TV

- This product uses coaxial cable for signal transmission, which comes in from your antenna or cable converter box. Coaxial cables use “F” connectors.
- Audio and Composite video cables are usually color coded according to use: yellow for video, red for audio and stereo right channel, and white for audio and stereo (or mono) left channel. If you check the rear panel of the TV, you will see that the jacks are color coded in the same manner as the cables.
- S-video cables can only be used with S-video compatible components.
- Component video cable comes in a set of three and provides excellent picture performance. Component video cable can only be used with compatible components.

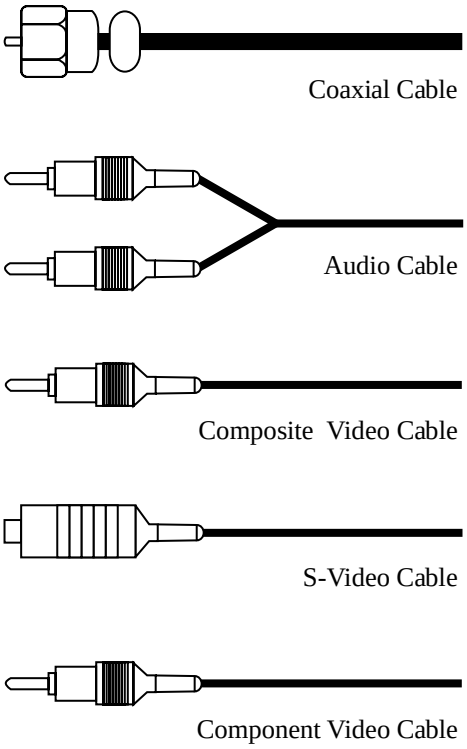

Caution:
Do not plug in the TV until you have finished all the connections.

Connecting the Antenna or the Cable Converter Box

This connection allows you to watch local and cable channels.

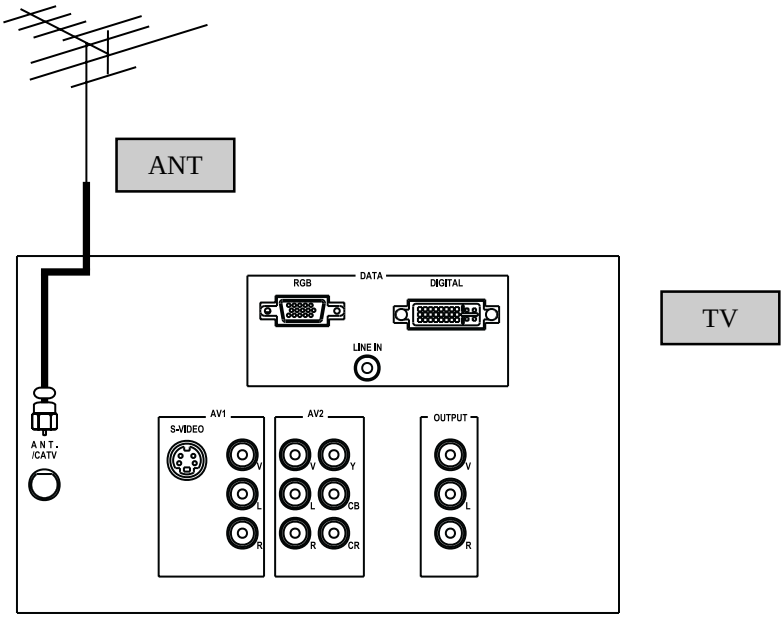

Connecting the TV

Connecting the VCR to Video Input

This connection allows you to watch local and cable channels and video programs played on VCR.

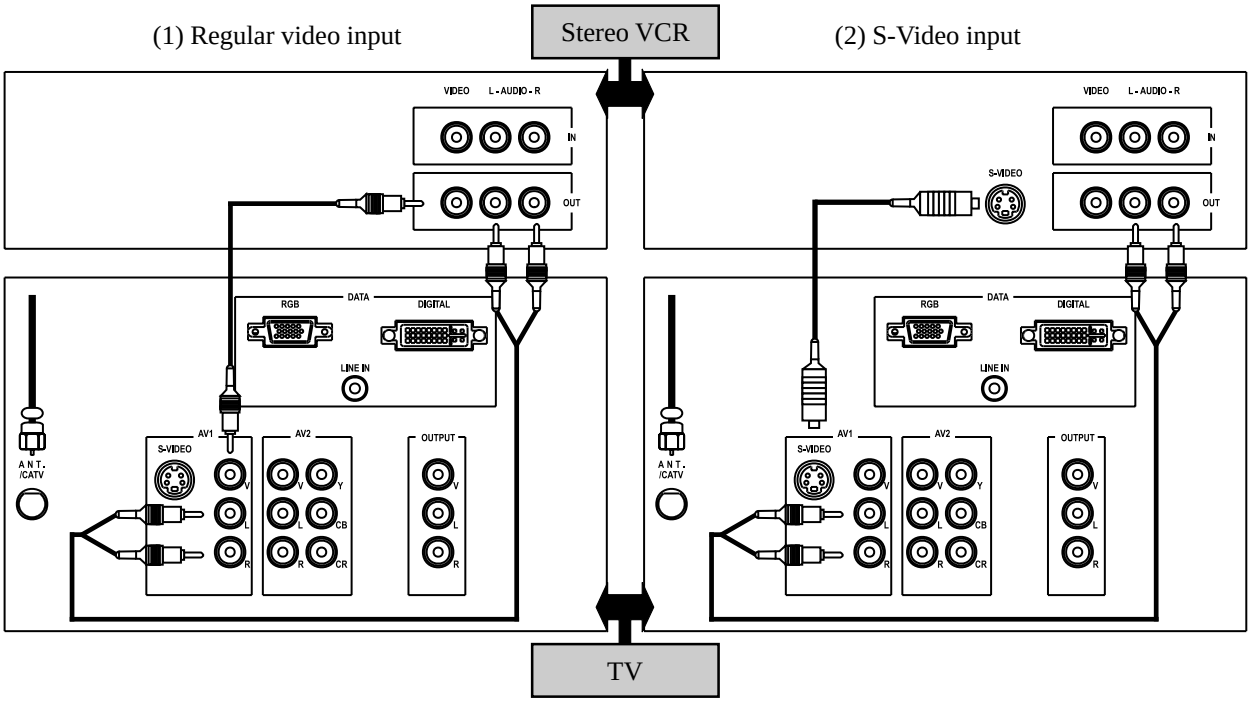

Connecting the DVD and the VCR

This connection allows you to watch DVD, video or TV programs. You may record from one channel while watching a program from another channel.

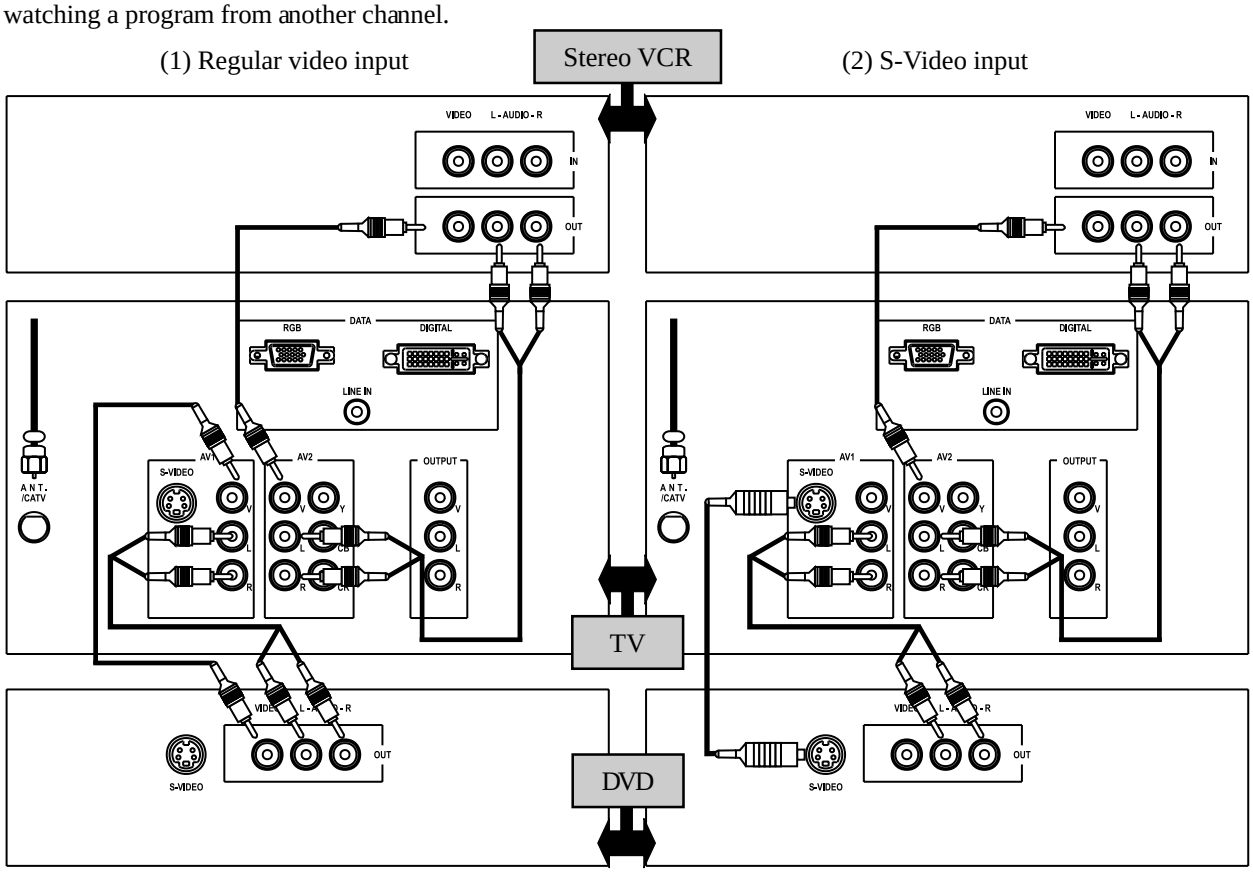

Connecting the TV

Connecting the DVD with Component Video and the VCR

This connection allows you to watch DVD, video or TV programs and to record DVD or TV programs. You can record from one channel while watching program from another channel. Your TV can use Component cable. Connecting your TV to the DVD with Component Video feature can greatly enhance picture quality and performance.

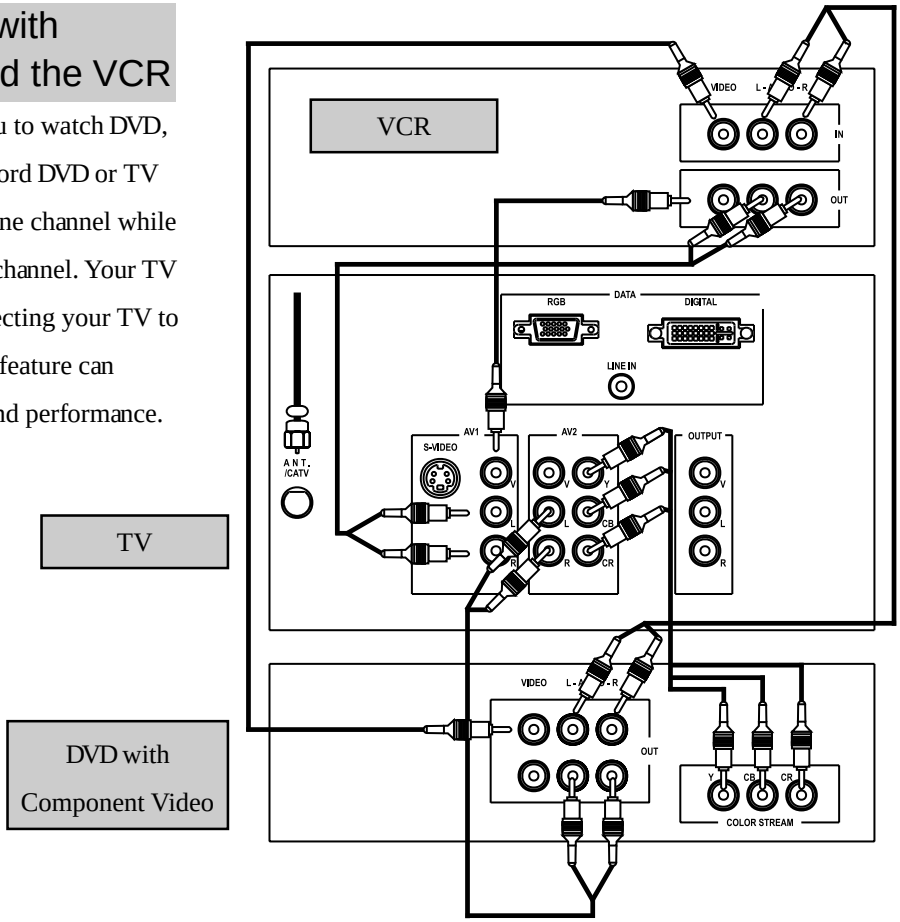

Connecting the Camcorder or the Game Device

This connection allows you to watch video materials recorded on the camcorder or pictures from the game device.

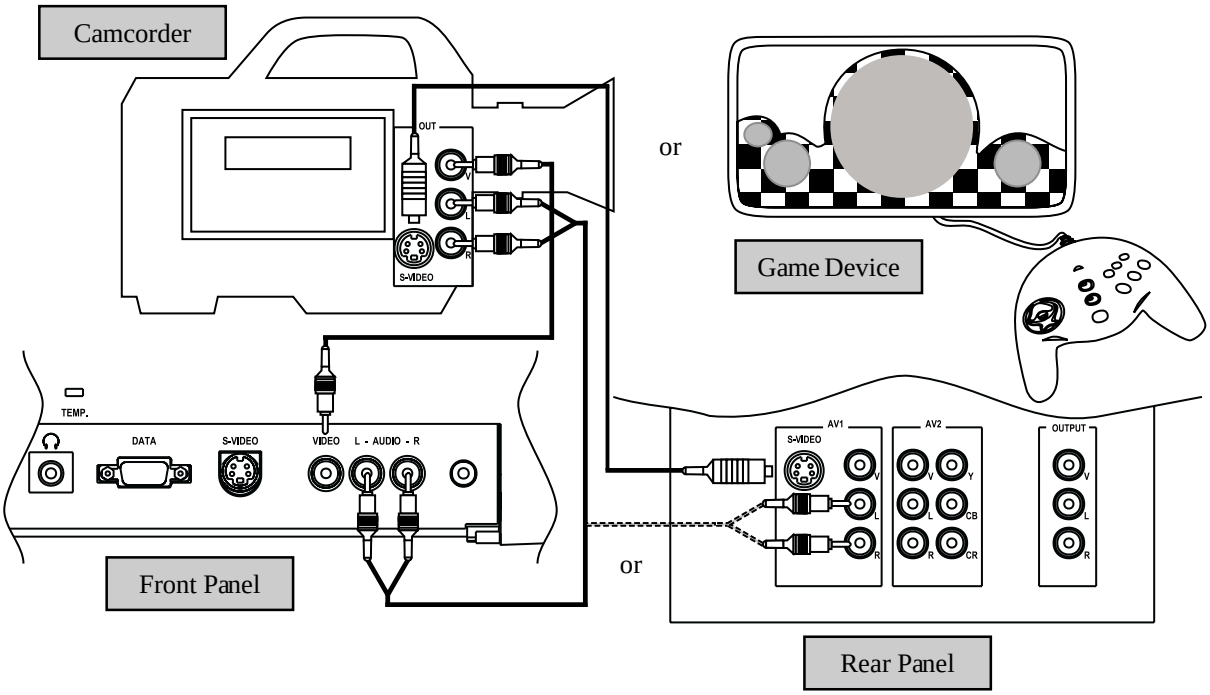

Connecting the TV

Connecting the Computer VGA Input

You can use the TV as a computer monitor. The computer can be connected to RGB1 input at the front and RGB2 and DVI inputs at the rear simultaneously.

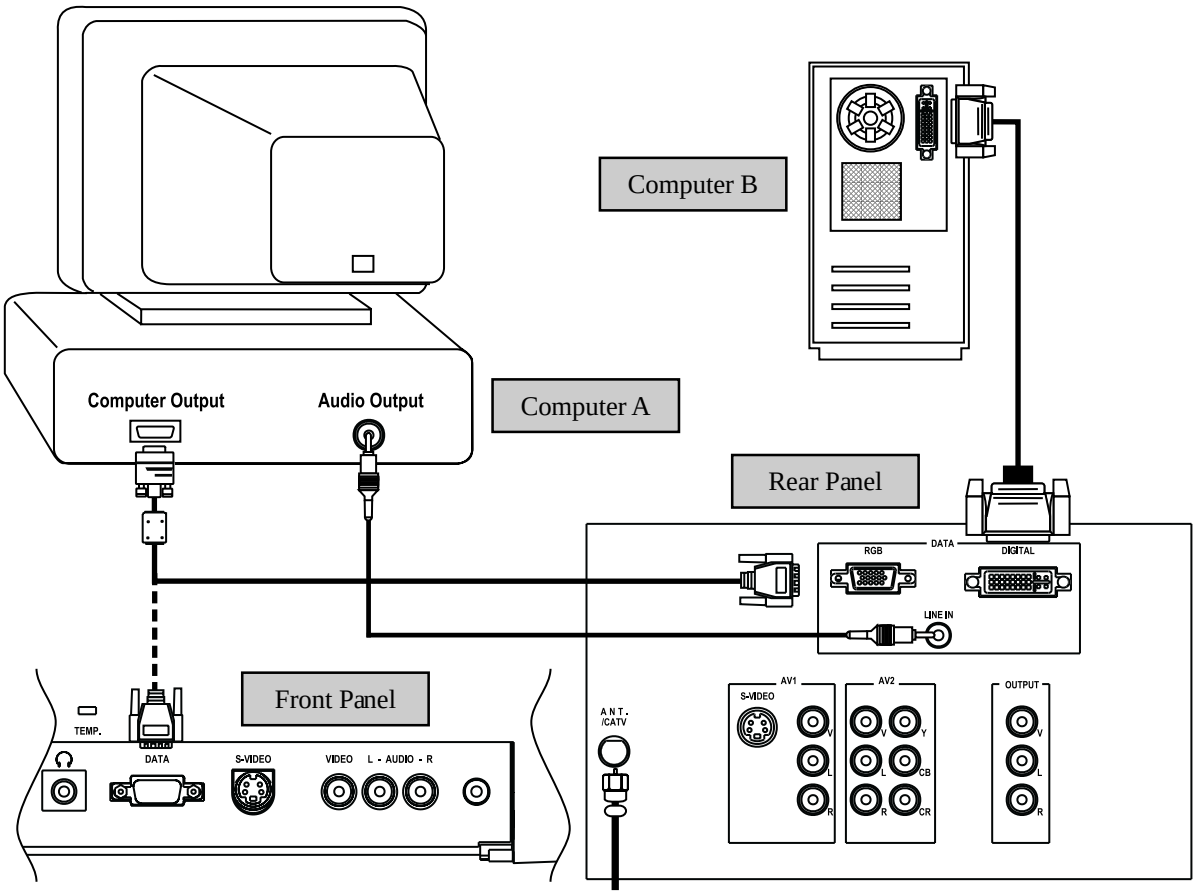

Connecting the Audio System

This connection allows you to use the audio amplifier to adjust the audio level.

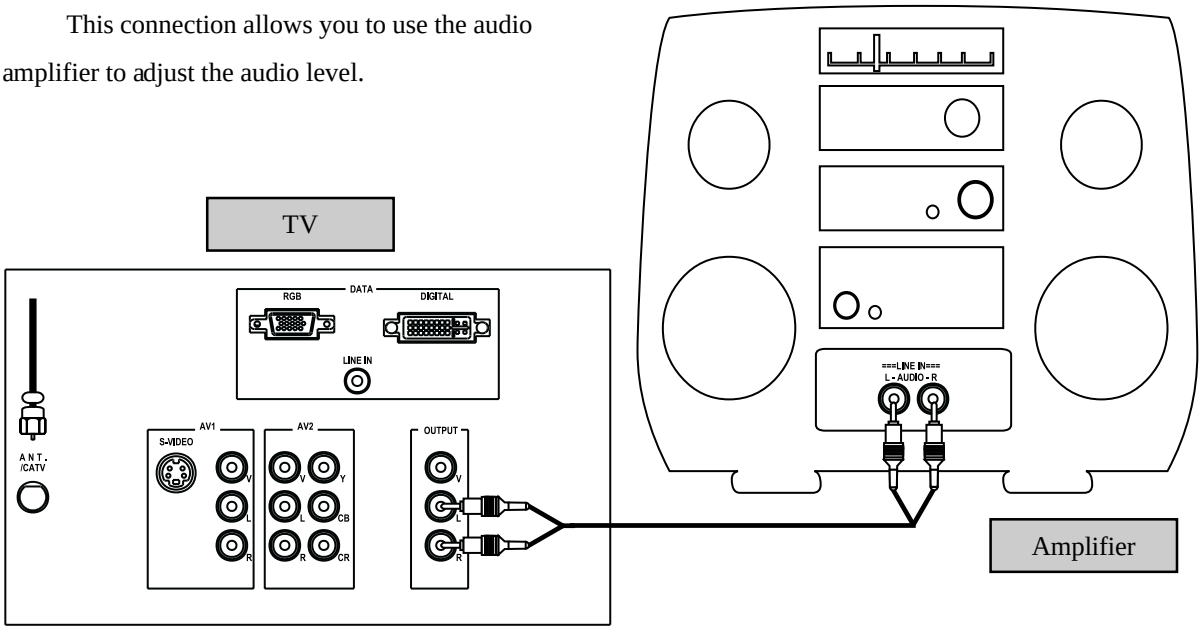

Connecting the TV

Connecting the VCR to Video Output

This connection allows the output of the source that is currently on the screen to a VCR.

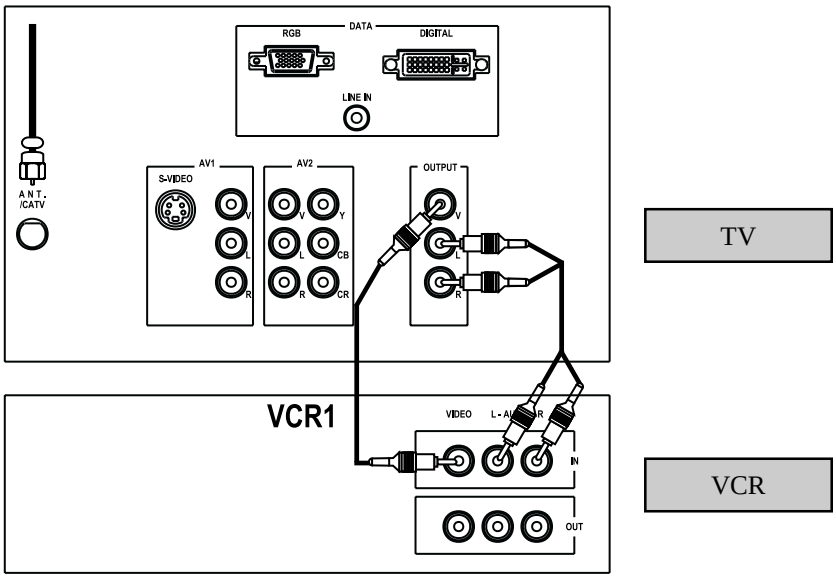

Connecting Two VCRs to Video Output

This connection allows you to record from one VCR to another VCR while watching a video program.

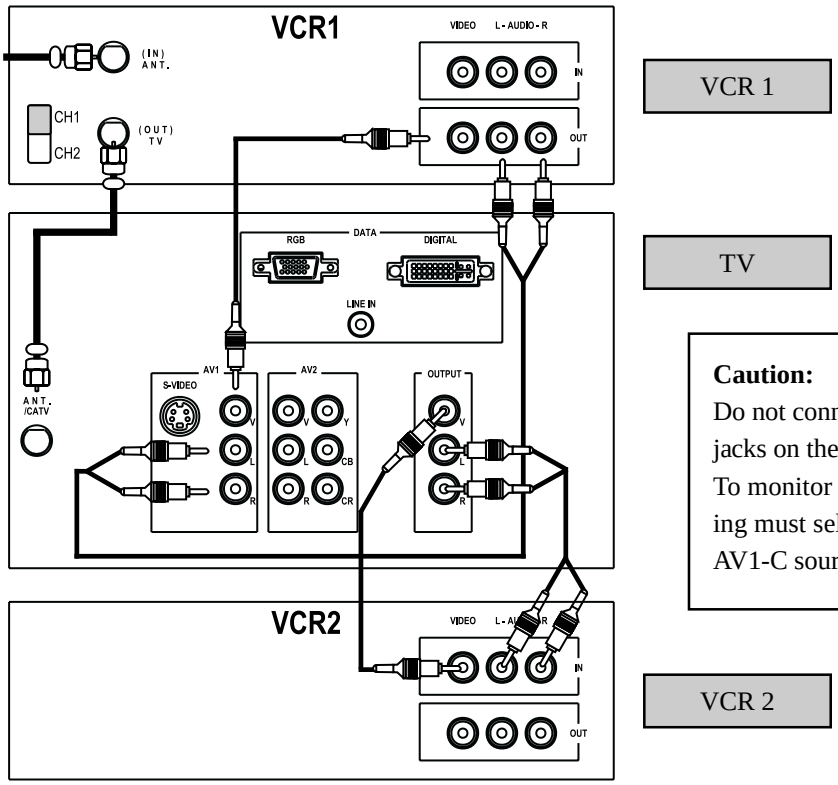

Caution:
Do not connect one VCR to the output and input jacks on the TV at the same time.
To monitor the reproduction, VCR 2 for recording must select Line IN, and the TV must select AV1-C source.

The Remote Control Functions

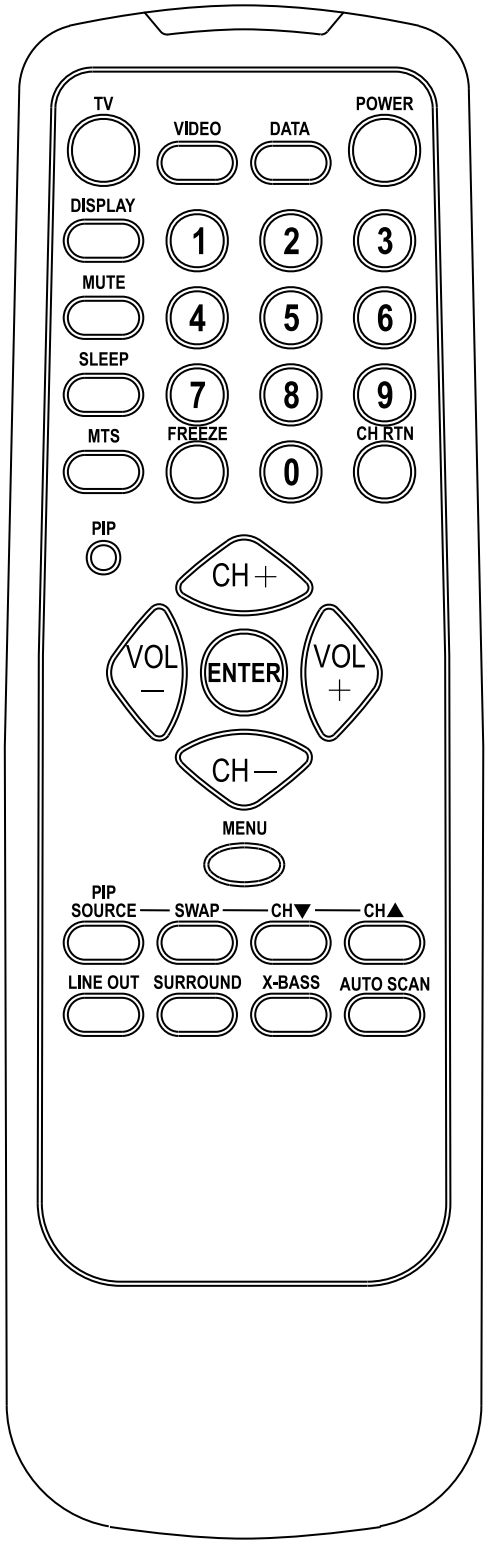

[POWER] turns the TV on and off.

[TV] selects video input source.

[VIDEO] selects any mode of AV1-S, AV1-C, AV2-YCrCb, AV2-C, AV3-S and AV3-C.

[DATA] selects any mode of RGB1, RGB2, and DVI.

[DISPLAY] displays on-screen message.

[MUTE] mutes the sound.

[SLEEP] sets the OFF timer (sleep).

[MTS] selects stereo, mono or language broadcast.

[FREEZE] freezes the screen.

[CH RTN] returns to the last viewed channel.

[CH+ / CH-]

Press “CH-” to select channel in reverse order, press “CH+” to select channel in numerical order.

[VOL+ / VOL-]

Press “VOL+” to turn up the volume, press “VOL-” to turn down the volume.

[MENU] allows menu editing.

[PIP] operates picture in picture.

[PIP SOURCE] selects the source of PIP.

[SWAP] switches main and second pictures.

[CH ▼ / CH ▲] selects channel in second picture only.

Press “CH ▼” to select channel in reverse order, and “CH ▲” in numerical order.

[LINE OUT] selects output source.

[SURROUND] adjusts surround sound effect.

[X-BASS] receives super-base sound effect.

[AUTO SCAN]

Make sure this function is executed when your TV connects the antenna or a cable converter box. It will activate auto scan and return to normal settings after the scan is done.

Basic Operation

Feature	Operation
Standby/On	Press [POWER] or STANDBY/ON on the TV. At this time, the POWER/STANDBY indicator will flash green and stop in green after 30 seconds.
Power OFF	Press POWER to turn off the power.
Selecting channel	Press [CH+ / CH-] to select the desired channel or press the channel number directly. You may also use CHANNEL - / + on the TV to select channel.
Volume adjustment	Press [VOL+ / VOL-] or VOLUME - / + on TV to adjust volume.
Muting the sound	Press [MUTE] to mute the sound.
Freezing the screen	Press [FREEZE] to freeze the screen.
Switching between two channels	Press [CH RTN] to return the last viewed channel.
Selecting video input source	1. Press [TV] to watch a local program or cable TV program. 2. Press [VIDEO] to select video program from AV1-S, AV1-C, AV2-YCrCb, AV2-C, AV3-S or AV3-C. 3. Press [DATA] to view computer data from RGB1, RGB2, or DVI. 4. You may also press SOURCE at the front panel to select any of the three video input sources.
Displaying on-screen message	Press [DISPLAY] to display on-screen message.

Advanced Operation

Setting OFF-Timer (Sleep)

Press [SLEEP] until the duration you desire appears on the screen. The change of time is as follows each time you press [SLEEP] :

1M ⟶ 15M ⟶ 30M ⟶ 60M ⟶ 90M ⟶ 120M ⟶ 0M

15 M means the TV goes into sleep mode in 15 minutes, and so on for other durations set. But when you pick 0 M, it means the OFF-timer is off.

Setting Sereo, Mono or SAP Broadcast

Press [MTS] until you the menu you desire appears.

Selection	Function
STEREO	You can listen to stereo sound when the TV receives stereo broadcast
SAP (second audio program)	You can listen to a second language when selecting SAP. The sound will be muted if it is not a SAP program.
MONO	You can receive mono sound (or use MONO to reduce the noise of stereo broadcast).

Setting X-BASS System

Press the [X-BASS] button will enhance the bass effect (even when the volume is very low). To turn off the X-Bass feature, press [X-BASS] again.

Using the Surround Sound Feature

Press the [SURROUND] button changes the stereo mode of TV or video output to surround-sound. To turn off the surround-sound feature, press [SURROUND] again.

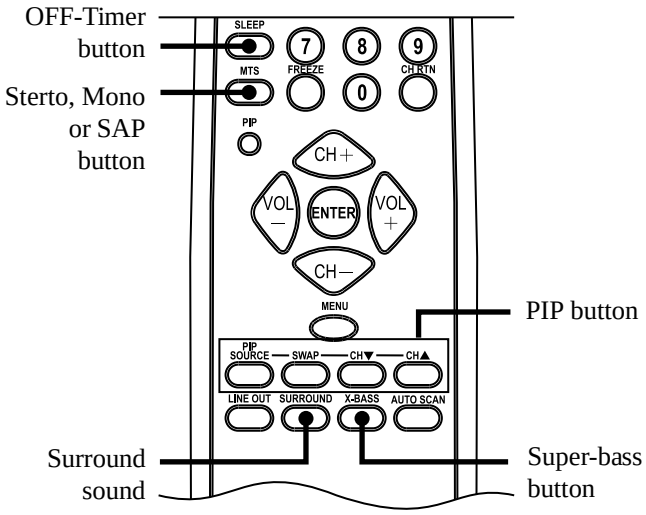

Watching Picture-In-Picture

Press [PIP] allows you to watch two pictures at the same time. The second picture can be a TV broadcast or come from an external source, such as a VCR. To display a TV broadcast as a second picture: ([DATA] doesn't provide this function).

Steps

1. Turn on the TV and select the program you want to watch.
2. Press [PIP] once to display a second picture. Use [MENU] to select the size of second picture (P.19).
3. Press [CH▼] or [CH▲] to choose the TV program you want to be displayed as a small picture.
4. Press [PIP SOURCE] or [MENU] , then select the PIP main menu. Under SOURCE, choose the input source from TV, AV1-S, AV1-C, AV2-YCrCb, AV2-C, AV3-S and AV3-C as a second picture (see P.18).
5. To turn PIP off, press [PIP] again.

Notes:
Main picture and second picture can not be TV program in the sam time.
If you desire to have both main and second pictures as TV signals, contact your dealer for dual-tuner option upgrade.

Switching the Main and Second Picture

Press [SWAP] while you are using the PIP feature to switch the main and second pictures. The main and second pictures are switched each time you press [SWAP] .

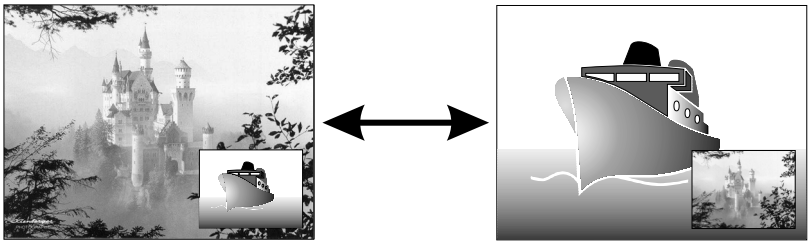

MENU

Menu Options

Below are all the menu options.

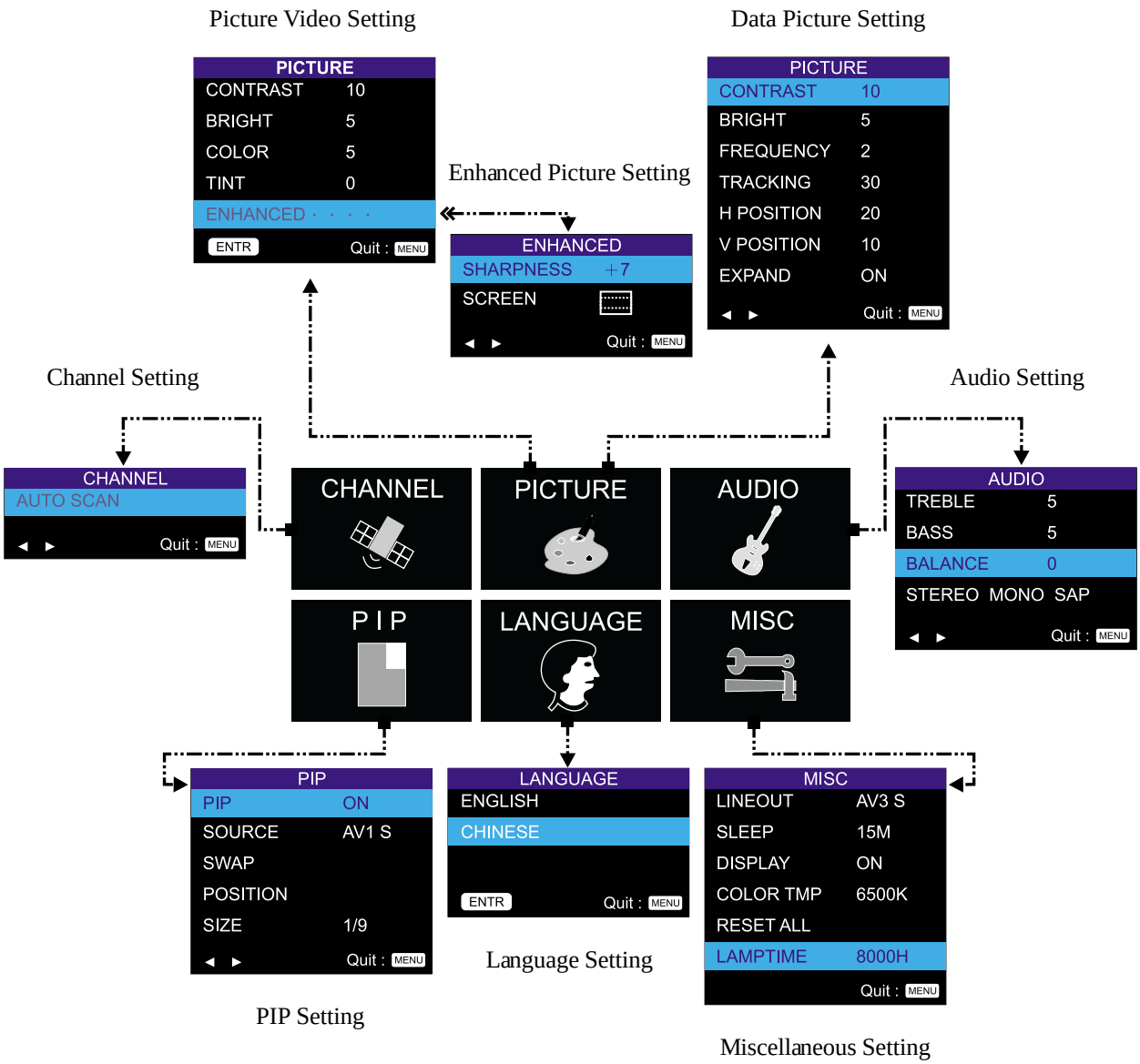

MENU

How to Program the Menus

You can use the buttons on the TV panel or remote control to program and save the menus.

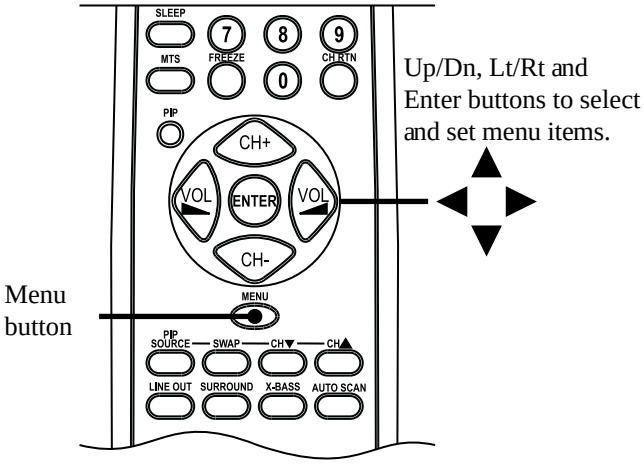

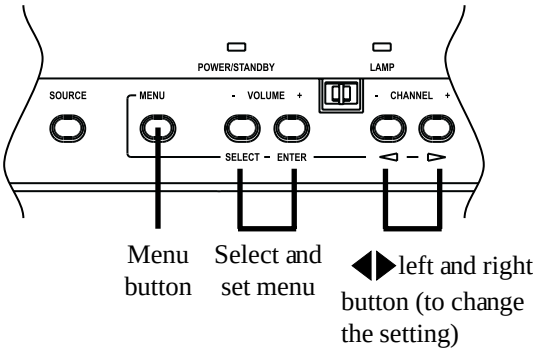

Steps

1. Press [MENU] to display the menus.
2. Press ▲▼ ◀▶ [SELECT] on TV panel to highlight the item desired, then press [ENTER] to set the selected menu.
3. Press ▲▼ [SELECT] on TV panel to highlight the item desired, then press [ENTER] or ◀▶ to select or adjust a setting.
4. To exit the menu mode, press [MENU] again.

Notices:

- When an item on the menu is selected by pressing [ENTER] , the color of the item will change.
- The menu display will disappear automatically if no selection is made in approximately 5 seconds.

MENU

CHANNEL

Item	Function and Operation
AUTO SCAN	When the TV connects the antenna or cable converter box, it will activate auto scan and return to normal settings after the scan is done. Press [ENTER] to make selection.

PICTURE VIDEO

Item	Function and Operation
CONTRAST	Controls the scale between brightest and darkest tune. Adjusting Contrast can change the amount of black and white in the picture. Press ◀▶ to adjust the setting.
BRIGHT	Adjusts the image luminance. Press ◀▶ to adjust the setting.
COLOR	Adjusts the video image from B/W to color saturation. Press ◀▶ to adjust the setting.
TINT	Adjusts the hue equilibrium of red and green in video image. Press ◀▶ to adjust the setting.

ENHANCED

Item	Function and Operation
SHARPNESS	Adjusts the sharpness of picture. Press ◀▶ to adjust the setting.
SCREEN	Adjusts the screen to original type. 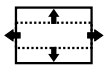 Adjusts the screen to magnified 16 : 9. Adjusts the screen to full screen. Press ◀▶ to adjust the setting.

Item	◀ Press ▶		Item	◀ Press ▶	
CONTRAST	Low	High	TINT	Red	Green
BRIGHT	Dark	Bright	SHARPNESS	Weak	Strong
COLOR	Light	Dark	COLOR TEMP	Yellowish(6500)	Bluish(11000)

PICTURE DATA

Item	Function and Operation
CONTRAST	Controls the scale between brightest and darkest tune. Adjusting Contrast can change the amount of black and white in the picture. Press ◀▶ to adjust the setting.

MENU

Item	Function and Operation
BRIGHT	Adjusts the brightness of picture. Press ◀▶ to adjust the setting.
FREQUENCY	Adjusts the data display frequency to keep in line with the setting of display card. Use this function to make adjustment when the picture shows vertical flickering lines. Press ◀▶ to adjust the setting.
TRACKING	Synchronizes the picture display signals and display card. When the picture becomes unsteady or flickers, use this function to make adjustment. Press ◀▶ to adjust the setting.
H POSITION	Moves the picture to left or right . Press ◀▶ to adjust the setting.
V POSITION	Moves the picture to up or down. Press ◀▶ to adjust the setting.
EXPAND	Expands the picture to the entire TV screen. Press ◀▶ to select ON or OFF.

AUDIO

Item	Function and Operation
TREBLE	Adjusts the treble in the sound source. Press ◀▶ to adjust the setting.
BASS	Adjusts the bass in the sound source. Press ◀▶ to adjust the setting.
BALANCE	Controls the output volume ratio from left and right speakers. Press ◀▶ to adjust the setting.
STEREO MONO SAP	See P.13 for details. Press ◀▶ to make selection.

PIP

Item	Function and Operation
PIP	Turns on and off picture-in-picture. Press ◀▶ to select ON or OFF.
SOURCE	The input source includes: TV, AV1-S (S-video), AV1-C, AV2-YCrCb, AV2-C, AV3-S (S-video) and AV3-C. Press ◀▶ to select source.
SWAP	Switches the main and second pictures. Press ◀▶ to make selection.

Item	Function and Operation
POSITION (position of second picture) 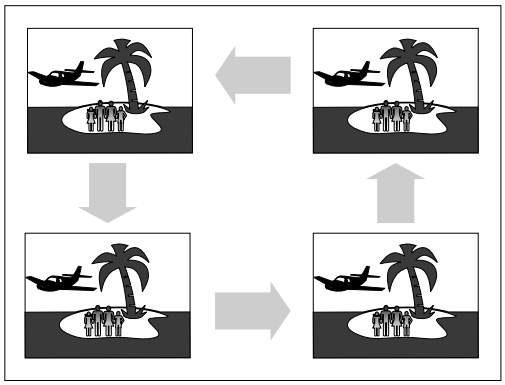	Selects the position of second picture which will be changed by the order shown on the left. Use ▲▼ ◀▶ to adjust the position.
SIZE (size of the second picture) 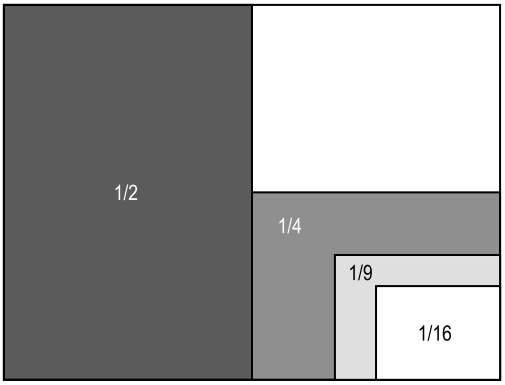	Selects the size of small pictures as 1/2, 1/4, 1/9 or 1/16 according to your preference. Press ◀▶ to adjust the size.

LANGUAGE

Item	Function and Operation
ENGLISH	Selecting this item means menus and messages will be displayed in English. Press [ENTER] to make selection.
CHINESE	Selecting this item means menus and messages will be displayed in Chinese. Press [ENTER] to make selection.

MISC

Item	Function and Operation
LINEOUT	Output sources include TV, AV1-S (S-video), AV1-C, 5AV2-YCrCb, AV2-C, AV3-S (S-video) and AV3-C. Press ◀▶ to select video source.
SLEEP	Setting sleep time of 1,15, 30, 60, 90, 120 and 0 minutes. Press ◀▶ to make selection.

Item	Function and Operation
DISPLAY	Displays the on-screen messages, such as channel and source. Press ◀▶ to select ON or OFF.
COLOR TEMP	Adjusts the color temperature from 6500K to 11000K. The default value is 6500K. Press ◀▶ to adjust the setting.
RESET ALL	Returns the display parameters of the current mode to its factory default settings. Press [ENTER] to make selection.
LAMPTIME	This tells the user the remaining life of lamp. Estimated life time of a new lamp is 8000 hours. The TV will detect the lamp life itself. It will show you a warning message “Lamp is running out of standard lifetime. Be sure to replace the lamp as soon as possible.” When you see this message, contact your dealer referred servicing to qualified service personnel to change the lamp as soon as possible.

Troubleshooting

If you have problem with your TV, refer to the following table for possible causes.

If you can't solve the problem, please contact your local dealer or our service center.

Problem	Solution
TV will not turn on	➤ Make sure the power cord is plugged in, then press [POWER]. ➤ The remote control batteries may be dead. Replace the batteries.
No picture, no sound	➤ Check all cables and antenna are accurately connected. ➤ Check if power plug or outlet is working.
No sound, picture OK	➤ The sound may be muted. Press [VOL]. ➤ The station may have broadcast difficulty. Try another channel. ➤ Check if [MUTE] button is inadvertently pressed.
Poor sound, picture OK	➤ The station may have broadcast difficulty. Try another channel.
Poor picture, sound OK	➤ Check the antenna connection. ➤ broadcast difficulty. Try another channel. ➤ Adjust PICTURE menu.
Poor picture and noise	➤ Check the antenna connection. ➤ TV signals might be too weak. ➤ Possible interference from appliance, neon lights or high voltage lines. ➤ Is there interference of high voltage line or neon lights?
Multiple/shadow images, sound OK	➤ The station may have broadcast difficulty. Try another channel.
Poor color or no color	➤ The station may have broadcast difficulty. Try another channel. ➤ Adjust TINT and COLOR in Picture menu.
No stereo or SAP sound from a known MTS broadcast	➤ Make sure the MTS feature is set properly.
LAMP indicator in red for a long time	➤ Lamp ignition fail. Contact the dealer.
TEMP indicator in red	➤ The fan is stuck. Contact the dealer. ➤ It indicates the screen has led to overheat of the TV and the screen will shut off automatically. After the TEMP indicator turns green again, press [POWER] or STANDBY/ON on the panel.
The remote control does not operate	➤ Make sure [VIDEO] and [DATA] are accurately set. ➤ The remote control batteries may be dead. Replace the batteries.

When Connecting Computer Sources

Picture unsteady or flickering	➤ Use TRACKING menu to make adjustment. ➤ Change display color setting in your computer.
Picture having vertical flickering stripes	➤ Use FREQUENCY menu to make adjustment. ➤ Check and reset the display mode of your display card to make it consistent with this product.

Specifications

TV Screen	- 52" (diagonal)	
LCD Technology	- 6.4" single LCD technology	
	- Amorphous silicon TFT color liquid crystal	
Lamp	- 100W User Replacable UHP lamp	
Number of Pixels	- 2400 (800 x 3) pixels (H) x 600 lines (V)	
Displayable Color	- 16.7M colors	
Contrast Ratio	- 150 : 1 ANSI Contrast	
Luminance	- 500 Nits	
Aspect Ratio	- 4 : 3	
H. Frequency	- 15~60 kHz	
V. frequency	- 50~85 Hz	
Video Compatibility	- NTSC/PAL/SECAM	
Computer Compatibility	- IBM VGA	640 x 350, 70Hz
		640 x 480, 60Hz
		720 x 400, 70Hz
	- VESA VGA	640 x 480, 60/72/75Hz
	- VESA SVGA	800 x 600, 56/60/72/75/85Hz
	- VESA XGA	1024 x 768, 60/70/75Hz
	- MAC LC 13"	640 x 480, 66.66Hz
	- MAC II 13"	640 x 480, 66.68 Hz
	- MAC 16"	832 x 624, 74.55 Hz
	- MAC 19"	1024 x 768, 75 Hz
	- PC 98	640 x 400, 56.42 Hz
		640 x 480, 60/70 Hz
Multimedia Audio	- MTS Stereo / SAP (applied to NTSC only)	
	- Simulated surround sound feature	
	- Built-in 2 x 15W speakers	
Front input connectors	- One S-Video input	
	- One composite video RCA input	
	- One 15-pin D-sub computer input	
Front output connectors	- One phone jack earphone	

Specifications

Rear input connectors	- One AC power cord input socket
	- One DVI digital data computer input
	- One 15-pin D-sub computer input
	- One Component video (Y, Cr, Cb) RCA input
	- One S-Video input
	- Two composite video RCA inputs (used in USA and Asia)
	- One composite video RCA input & one SCART adapter (used in Europe)
	- One phone jack for computer audio input
Rear output connectors	- One composite video RCA output
	- One set of audio output
Power Supply	- Automatic switch
	- 100~120/200~240V, 50~60Hz AC
Power consumption	- Normal operation : 180W
	- Standby / On : 5W
Dimensions (W x H x D)	- 45.5 x 48.9 x 19.6inches
	- 1156 x 1244 x 497 mm
Weight	- 114.53 lbs / 52 kgs
Operating Environment	- Operating temp : 5°C~40°C / 41°F~104°F
	- Operating humidity : 80% maximum
	- Storage temp : -20°C~60°C / -4°F~140°F
	- Storage humidity : 80% maximum
Safety Regulation	- FCC-B, CE-B, BCIQ, UL, CUL, TÜV/GS

Compatible Frequency Table

Model	Resolution	Vertical Scan Frequency (Hz)	Horizontal Scan Frequency (kHz)
IBM VGA	640x350	70	31.5
IBM VGA	640x480	60	31.5
IBM VGA	720x400	70	31.5
VESA VGA	640x480	60	31.5
VESA VGA	640x480	72	37.9
VESA VGA	640x480	75	37.5
VESA SVGA	800x600	56	35.2
VESA SVGA	800x600	60	37.9
VESA SVGA	800x600	72	48.1
VESA SVGA	800x600	75	46.9
VESA SVGA	800x600	85	53.7
VESA XGA	1024x768	60	48.4
VESA XGA	1024x768	70	56.5
VESA XGA	1024x768	75	60
* MAC LC 13"	640x480	66.66	34.98
* MAC II 13"	640x480	66.68	35
* MAC 16"	832x624	74.55	49.72
* MAC 19"	1024x768	75	60.24
PC 98	640x400	56.42	24.83
PC 98	640x480	70	31.5
PC 98	640x480	60	31.5

“ * ” means optional connector is required.

Accessories

Make sure all the accessories listed below come with the TV. Contact your dealer if any of the accessories is missing or broken.

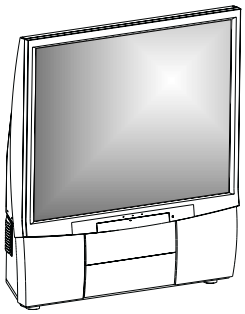

TV Display

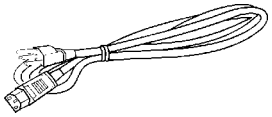

Power Cord

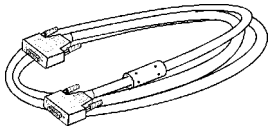

Computer VGA Cable

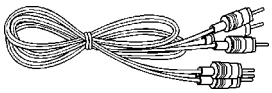

Component Video Cable

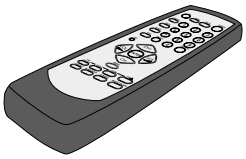

Remote Control

Battery

User's Manual

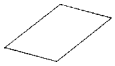

Warranty Card