USA's primary source for projector lamps
myprojectorlamps

PROJECTOR OWNER'S MANUAL

Optoma

EH7700

Need a replacement lamp for this projector?

www.myprojectorlamps.com

Original manufacturer manual, provided unmodified as a courtesy of MyProjectorLamps.com.
All trademarks belong to their respective owners.

Table of Contents

Table of Contents 1
Usage Notice 2
Safety Information.....2
Precautions.....3
Eye Safety Warnings 5
Product Features 5
Introduction.....6
Package Overview.....6
Product Overview 7
Main Unit..... 7
Control Panel..... 8
Input/Output Connections..... 9
Remote Control..... 10
Installation 11
Connecting the Projector 11
Install the Projection Lens..... 11
Connect to Computer/Notebook 12
Connect to Video Sources..... 13
Powering the projector On / Off 14
Powering On the Projector..... 14
Powering Off the Projector..... 15
Warning Indicator..... 16
Adjusting the Projected Image.....17
Adjusting the Projector's Height 17
Adjusting the Projector's Position..... 18
User Controls 20
Control Panel & Remote Control 20
Control Panel..... 20
Remote Control..... 21
Using a Wire Remote Control..... 23
Remote Code Setting 24
On-screen Display Menus 25
How to operate 25
Menu Tree..... 26
IMAGE..... 28
IMAGE | Advanced 30
DISPLAY..... 33
DISPLAY | PIP 36
SETUP..... 37
SETUP | Lens Function 39
SETUP | Security..... 40
SETUP | Signal (RGB)..... 42
SETUP | Signal (Video) 43
SETUP | Advanced..... 44
SETUP | Network | LAN Settings..... 45
SETUP | Network | Control Settings . 48
OPTION..... 49
OPTION | Remote Settings 51
OPTION | Advanced 52
OPTION | Lamp Settings..... 53
OPTION | Information..... 54
Appendices.....55
Troubleshooting 55
Replacing the lamp 60
Compatibility Modes 62
Computer Compatibility (PC/Mac) 62
Video Compatibility..... 63
RS232 Commands and Protocol Function List 64
RS232 Pin Assignments..... 64
RS232 Protocol Function List..... 65
Telnet Commands.....69
AMX Device Discovery commands...69
PJLink™ supported commands.....70
Trademarks.....72
Ceiling Mount Installation.....75
Ceiling Mount Safeguards 76
Optoma Global Offices 78
Regulation & Safety Notices.....80

Safety Information

	The lightning flash with arrow head within an equilateral triangle is intended to alert the user to the presence of uninsulated “dangerous voltage” within the product’s enclosure that may be of sufficient magnitude to constitute a risk of electric shock to persons.
	The exclamation point within an equilateral triangle is intended to alert the user to the presence of important operating and maintenance (servicing) instructions in the literature accompanying the appliance.

WARNING: TO REDUCE THE RISK OF FIRE OR ELECTRIC SHOCK, DO NOT EXPOSE THIS APPLIANCE TO RAIN OR MOISTURE. DANGEROUS HIGH VOLTAGES ARE PRESENT INSIDE THE ENCLOSURE. DO NOT OPEN THE CABINET. REFER SERVICING TO QUALIFIED PERSONNEL ONLY.

Class A emissions limits

This Class A digital apparatus meets all requirements of the Canadian Interference-Causing Equipment Regulations.

Important Safety Instruction

1. Do not block any ventilation openings. To ensure reliable operation of the projector and to protect from over heating, it is recommended to install the projector in a location that does not block ventilation. As an example, do not place the projector on a crowded coffee table, sofa, bed, etc. Do not put the projector in an enclosure such as a book case or a cabinet that restricts air flow.
2. Do not use the projector near water or moisture. To reduce the risk of fire and/or electric shock, do not expose the projector to rain or moisture.
3. Do not install near heat sources such as radiators, heaters, stoves or any other apparatus such as amplifiers that emits heat.
4. Clean only with dry cloth.
5. Only use attachments/accessories specified by the manufacturer.
6. Do not use the unit if it has been physically damaged or abused. Physical damage/abuse would be (but not limited to):
   - ❒ Unit has been dropped.
   - ❒ Power supply cord or plug has been damaged.
   - ❒ Liquid has been spilled on to the projector.
   - ❒ Projector has been exposed to rain or moisture.
   - ❒ Something has fallen in the projector or something is loose inside.

   Do not attempt to service the unit yourself. Opening or removing covers may expose you to dangerous voltages or other hazards. Please call Optoma before you send the unit for repair.
7. Do not let objects or liquids enter the projector. They may touch dangerous voltage points and short out parts that could result in fire or electric shock.
8. See projector enclosure for safety related markings.
9. The unit should only be repaired by appropriate service personnel.

Precautions

Please follow all warnings, precautions and maintenance as recommended in this user's guide.

- Warning- Do not look into the projector's lens when the lamp is on. The bright light may hurt and damage your eyes.
- Warning- To reduce the risk of fire or electric shock, do not expose this projector to rain or moisture.
- Warning- Please do not open or disassemble the projector as this may cause electric shock.
- Warning- When replacing the lamp, please allow the unit to cool down. Follow instructions as described on pages 60-61.
- Warning- This projector will detect the life of the lamp itself. Please be sure to change the lamp when it shows warning messages.
- Warning- Reset the "Lamp Reset" function from the on-screen display "OPTION | Lamp Settings" menu after replacing the lamp module (refer to page 53).
- Warning- When switching the projector off, please ensure the cooling cycle has been completed before disconnecting power. Allow 60 seconds for the projector to cool down.
- Warning- Do not use lens cap when projector is in operation.
- Warning- When the lamp is approaching the end of its lifetime, the message "Lamp Warning: Lamp life exceeded." will show on the screen. Please contact your local reseller or service center to change the lamp as soon as possible.
- Warning- Do not look into or point the laser pointer on your remote control into your or someone's eyes. Laser pointer can cause permanent damage to eyesight.

Warning- Allowing the proper amount of space on the top, sides, and rear of the projector cabinet is critical for proper air circulation and cooling of the unit. The dimensions shown here indicate the minimum space required. If the projector is to be built into a compartment or similarly enclosed, these minimum distances must be maintained.

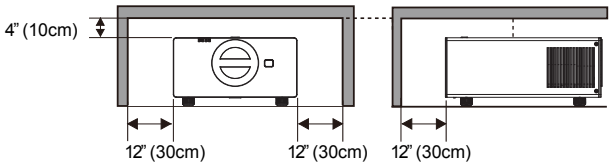

Do:

- Turn off and unplug the power plug from the AC outlet before cleaning the product.
- Use a soft dry cloth with mild detergent to clean the display housing.
- Disconnect the power plug from AC outlet if the product is not being used for a long period of time.

Do not:

- Block the slots and openings on the unit provided for ventilation.
- Use abrasive cleaners, waxes or solvents to clean the unit.
- Use under the following conditions:
  - In extremely hot, cold or humid environments.
    - Ensure that the ambient room temperature is within 5 - 40°C.
    - Relative Humidity is 5 - 40°C, 80% (Max.), non-condensing.
  - In areas susceptible to excessive dust and dirt.
  - Near any appliance generating a strong magnetic field.
  - In direct sunlight.

Eye Safety Warnings

- Avoid staring/facing directly into the projector beam at all times. Keep your back to the beam as much as possible.
- When projector is used in a classroom, adequately supervise students when they are asked to point out something on the screen.
- In order to minimize the lamp power, use room blinds to reduce ambient light levels.

Product Features

- WUXGA (1920 x 1200) Native resolution
- HD compatible – 1080p supported
- Extensive optional lens
- Wide lens shift range for installation flexibility
- Dual lamp system
- Comprehensive input/output terminals and control interfaces
- Network support

Package Overview

Unpack and inspect the box contents to ensure all parts listed below are in the box. If something is missing, please contact your nearest customer service center.

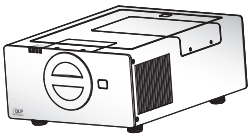

Projector

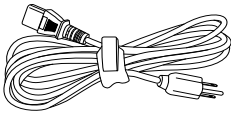

Power Cord 3.0m

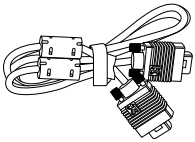

VGA Cable 1.8m

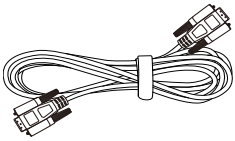

RS232 Cable 1.8m

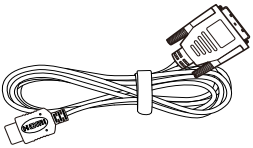

DVI/HDMI Cable 30cm

IR Remote Control

Documentation :

- ☑ User's Manual
- ☑ Warranty Card
- ☑ Quick Start Card
- ☑ WEEE Card (for EMEA only)

2 × Security Eye Bolt

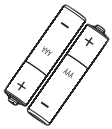

2 × AAA Batteries

2 × Spring Washer

2 × Flat Washer

NOTE

- Due to different applications in each country, some regions may have different accessories.

Product Overview

Main Unit

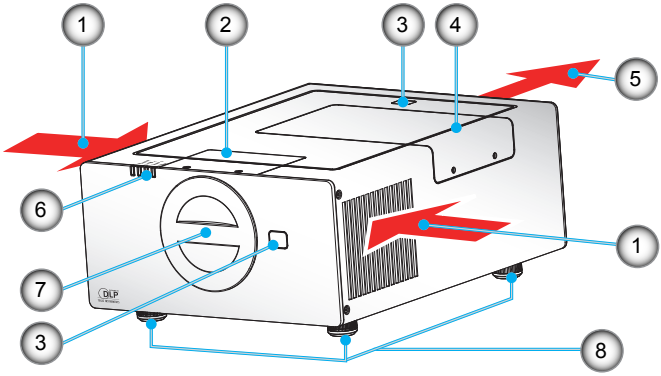

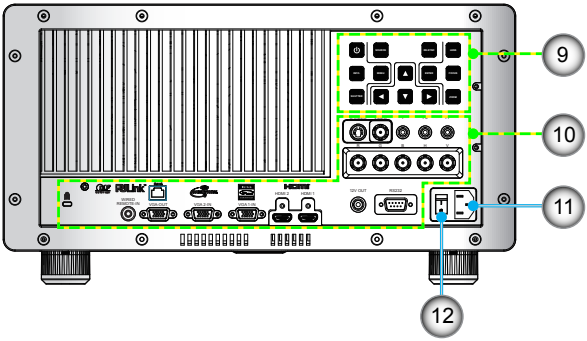

1. Ventilation (inlet)
2. Lens Door
3. IR Receivers
4. Lamp Door
5. Ventilation (outlet)
6. Indicator LED
7. Projector Cap
8. Tilt-Adjustment Feet
9. Control Panel
10. Input / Output Connections
11. Power Socket
12. Power Switch

Control Panel

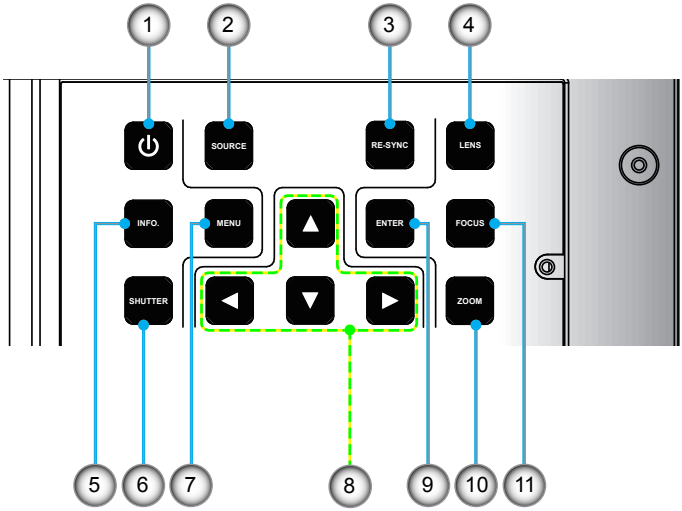

1. Power button
2. SOURCE
3. RE-SYNC
4. LENS
5. Information
6. SHUTTER
7. MENU
8. Four Directional Select Keys
9. ENTER
10. ZOOM
11. FOCUS

Input/Output Connections

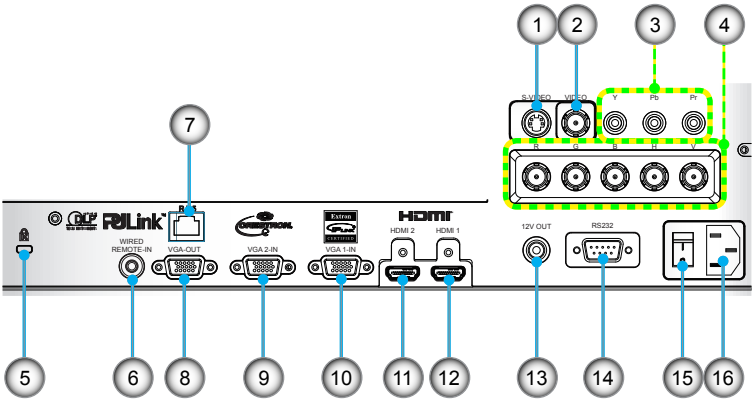

1. S-Video Input Connector
2. Composite Video Input Connector
3. Component Video Input Connector (YPbPr)
4. BNC Input Connector (YPbPr/RGBHV)
5. Kensington™ Lock Port
6. Wired Remote Input Connector
7. RJ-45 Networking Connector
8. VGA-Out Connector (Monitor Loop-through Output)
9. VGA2-In/YPbPr Connector
   (PC Analog Signal/Component Video Input/HDTV/YPbPr)
10. VGA1-In/YPbPr Connector
    (PC Analog Signal/Component Video Input/HDTV/YPbPr)
11. HDMI 1 Connector
12. HDMI 2 Connector
13. 12V Trigger Relay Connector (12V, 250mA. 3.5mm Mini Jack)
14. RS-232 Connector (9-pin DIN Type)
15. Power Switch
16. Power Socket

Remote Control

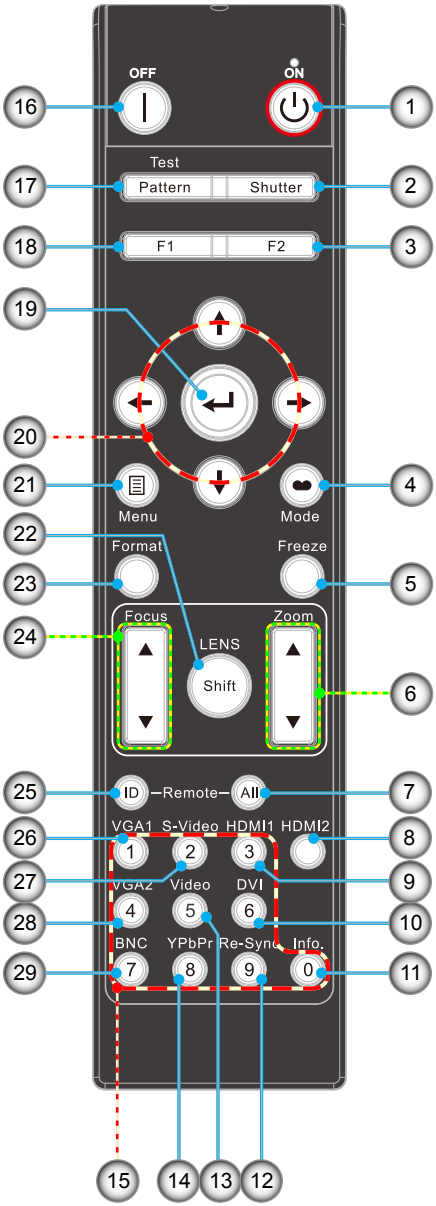

1. Power On
2. Shutter
3. Function 2 (Programmable see P.51)
4. Display Mode
5. Freeze
6. Lens Zoom +/-
7. All
8. HDMI 2
9. HDMI 1
10. DVI (Reserved Key)
11. Information
12. Re-Sync
13. Video
14. YPbPr
15. Numbered keypad (for password input)
16. Power Off
17. Pattern
18. Function 1 (Programmable see P.51)
19. Enter/Help
20. Four Directional Select Keys
21. Menu
22. Lens Shift
23. Format (Image Aspect Ratio)
24. Lens Focus +/-
25. ID
26. VGA 1
27. S-Video
28. VGA 2
29. BNC

Note

- Number keypad (for password input exclude “0”, “0” can not use as part of the password)

Connecting the Projector

Install the Projection Lens

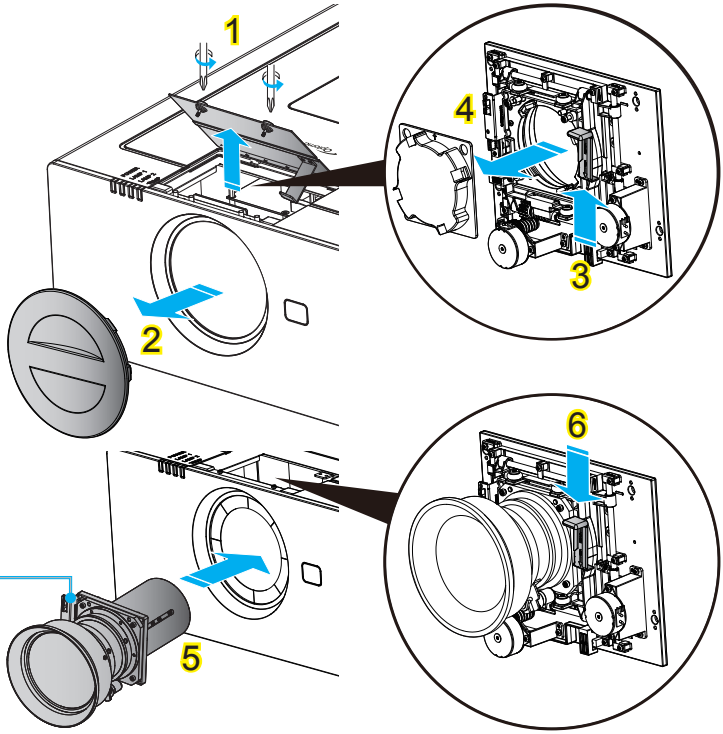

- Before install or replacing the lens, switch off the power to the projector
- Avoid using the remote control or projector keypad button to adjust the lens shift or zoom/ focus while the lens attachment process is carried out.

Install Lens Procedure:

1. Unscrew the 2 screws and lift up the lens door. 1
2. Remove the projector cap. 2
3. Push the release lever up to release the lock. 3
4. Remove the lens cap. 4
5. Push the lens into position. 5
6. Push the release lever down to lock the lens in place. 6

(Please note that need to align the PCB)

To replace the lens, reverse the previous steps.

Connect to Computer/Notebook

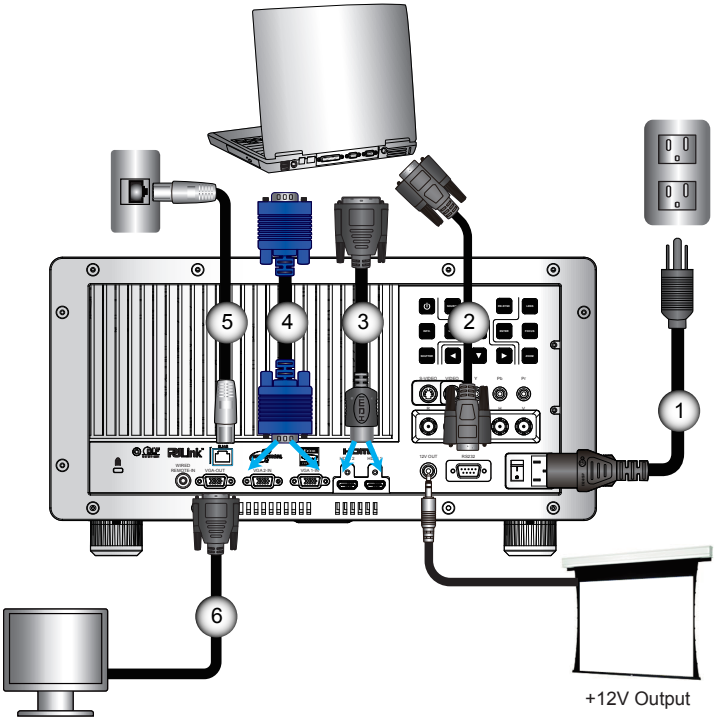

- Due to the difference in applications for each country, some regions may have different accessories.
- (*) Optional accessory

1.....Power Cord
2.....RS232 Cable
3.....DVI/HDMI Cable
4.....VGA Cable
5.....*Network Cable
6.....*VGA Output Cable

Connect to Video Sources

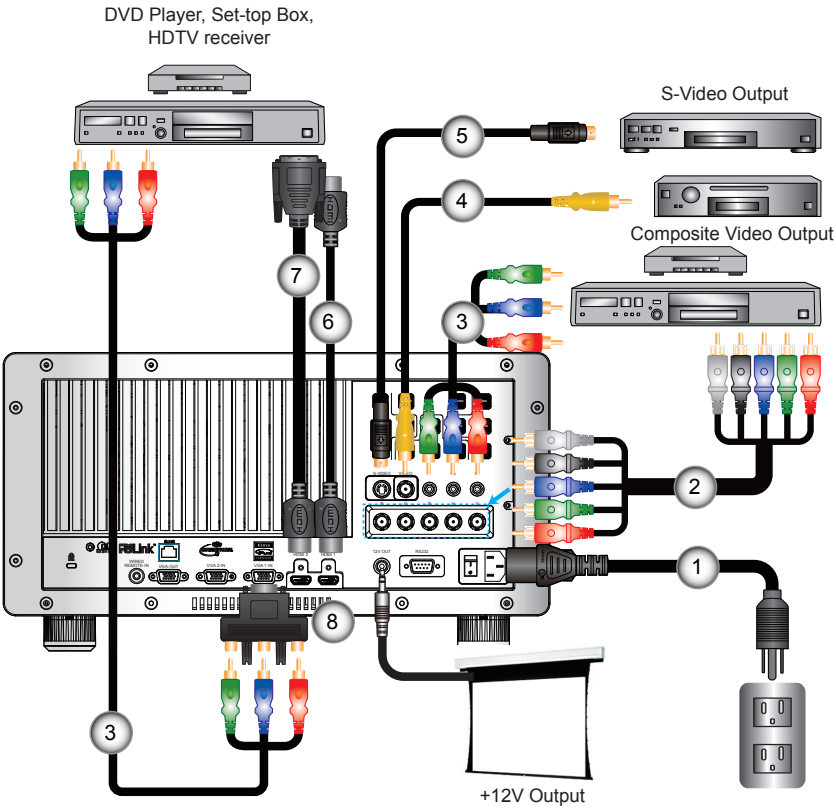

Note

- Due to the difference in applications for each country, some regions may have different accessories.
- (*) Optional accessory

1.....Power Cord
2.....*BNC Cable
3.....*3 RCA Component Cable
4.....*Composite Video Cable
5.....*S-Video Cable
6.....*HDMI Cable
7.....DVI/HDMI Cable
8.....*15-Pin to 3 RCA Component/HDTV Adaptor

Powering the projector On / Off

Powering On the Projector

1. Remove the projector cap. 1
2. Securely connect the power cord and signal cable. Power on the switch 2 and the Power LED flashes Red.
3. Turn on the lamp by pressing "⏻" button either on the rear of the projector or on the remote. The POWER LED will now turn Blue. 3

   The startup screen will display in approximately 10 seconds. The first time you use the projector, you will be asked to select the preferred language and power saving mode.

4. Turn on and connect the source that you want to display on the screen (computer, notebook, video player, etc). The projector will detect the source automatically. If not, push menu button and go to "OPTION".
   Make sure that the "Source Lock" has been set to "Off".

❖ If you connect multiple sources at the same time, press the "SOURCE" button on the control panel or direct source keys on the remote control to switch between inputs.

NOTE

❖ When Power mode (Standby) is set to Eco, the VGA and RJ45 will be deactivated when the projector is in standby.

NOTE

❖ Turn on the projector first and then select the signal sources.

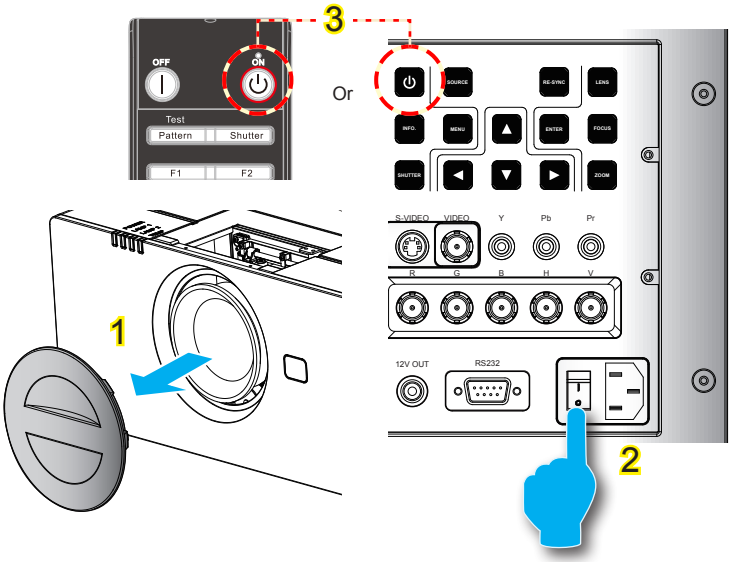

Powering Off the Projector

1. Press the "|" button on the remote control or press the "⏻" button on the control panel to turn off the projector. 4
   The following message will be displayed on the screen.

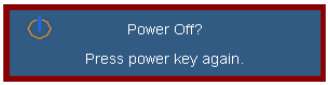

   Press the "|" button on the remote control or press the "⏻" button on the control panel again 4 to confirm otherwise the message will disappear after 15 seconds. When you pressing for the second time, the projector will shut down.
2. The cooling fans continue to operate for about 60 seconds for cooling cycle and the POWER LED will flash Blue. When the POWER LED turns red, the projector has entered standby mode.

   If you wish to turn the projector back on, you must wait until the projector has completed the cooling cycle and has entered standby mode. Once in standby mode, simply press the "|" button on the remote control or press the "⏻" button on the control panel to restart the projector. 4
3. Power off the switch. 2
4. Disconnect the power cord from the electrical outlet and the projector.
5. Do not turn on the projector immediately following a power off procedure.

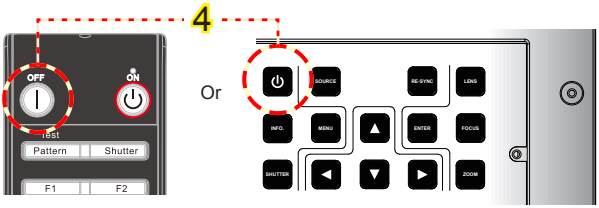

Warning Indicator

Note

- Contact the nearest service center if the projector displays these symptoms. See pages 78-79 for more information.

When the warning indicators (see below) come on, the projector will automatically shutdown:

- “LAMP1” or “LAMP2” LED indicator is lit red and if “POWER” LED indicator flashes red.
- “TEMP” LED indicator is lit red and if “POWER” LED indicator flashes red. This indicates the projector has overheated. Under normal conditions, the projector can be switched back on.
- “TEMP” LED indicator flashes red and if “POWER” LED indicator flashes red.

Unplug the power cord from the projector, wait for 30 seconds and try again. If the warning indicator light up again, please contact your nearest service center for assistance.

Adjusting the Projected Image

Adjusting the Projector's Height

The projector is equipped with elevator feet for adjusting the image height.

1. Locate the adjustable foot you wish to modify on the underside of the projector.
2. Rotate the adjustable ring clockwise to raise the projector or counter clockwise to lower it. Repeat with the remaining feet as needed.

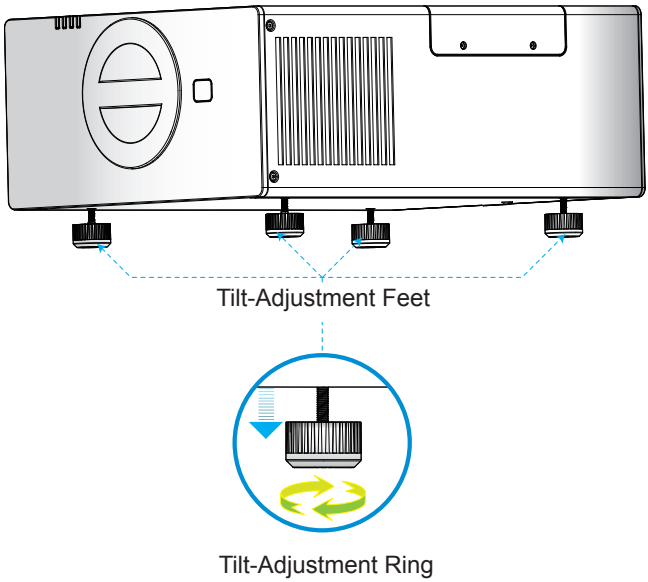

Adjusting the Projector's Position

To determine where to position the projector, consider the size and shape of your screen, the location of your power outlets, and the distance between the projector and the rest of your equipment. Example:

- ST1 Lens: The projector will focus at distances from 3.08 to 68.6 feet (0.94 to 20.9 meters).

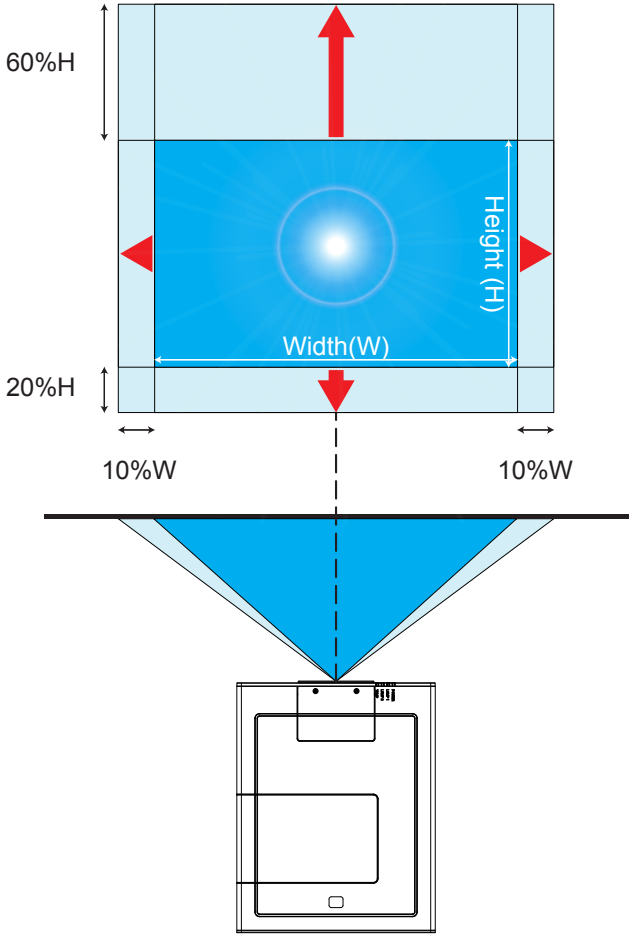

Lens

Optoma Model Name	WT1	WT2	ST1	TZ1	TZ2
Focal Length (f) (mm)	11.73	18.1~21.72	21.5~28.7	28.6~54.33	54.06~102.7
F number	2.2	2.2-3.33	2.0-3.0	2.2-3.0	2.3~3.16
Zoom Range (Ratio)	Fixed	1.2x	1.33x	1.9x	1.9x
Zoom & Focus Adjust-ment	Motorized				
Throw Ratio	0.77	1.2~1.45	1.45~1.94	1.94~3.67	3.67~6.98
Throw Distance (m)	0.5~8.3	0.78~15.6	0.94~20.9	1.25~39.5	2.37~75.2
Throw Distance (feet)	1.64~27.23	2.56~51.18	3.08~68.57	4.10~129.59	7.78~246.72
Projection Image Size	30”~500” inches				
Motorized Lens Shift	Fixed	Horizontal : +/-10% offset, Vertical : -20%~+60% offset			

❖ This table is for user’s reference only.

Control Panel & Remote Control

Control Panel

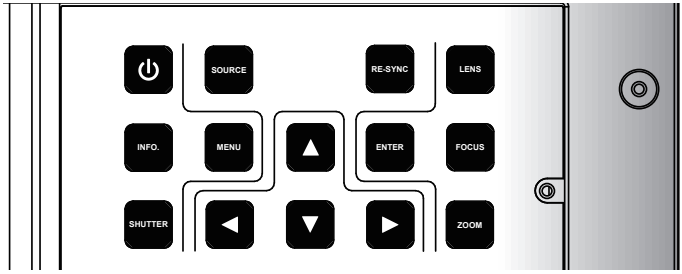

Using the Control Panel	
Power	Refer to the “Power On/Off the Projector” section on pages 14-15.
SOURCE	Press “SOURCE” to select an input signal.
RE-SYNC	Automatically synchronize the projector to the input source.
LENS	Adjust Lens shift up/down/left/right
Information	Display the projection’s information.
SHUTTER	Open/close the built-in shutter.
MENU	Press “Menu” to launch the on-screen display (OSD) menu. To exit OSD, Press “Menu” again.
Four Directional Select Keys	Use ▲ ▼ ◀ ▶ to select items or make adjustments to your selection.
ENTER	Confirm your item selection.
ZOOM	Adjust lens zoom function.
FOCUS	Adjust lens focus function.

Remote Control

Using the Remote Control	
Power On ⏻	Refer to the “Power On/Off the Projector” section on pages 14-15.
Power Off ❙	Refer to the “Power On/Off the Projector” section on pages 14-15.
Function 2	Adjust Function 2 settings.
Lens Zoom +/-	Adjust lens zoom function.
Lens Shift	Adjust lens shift function.
Pattern	Display a test pattern.
Mode	Select the display mode from Presentation, Bright, Movie, sRGB, Blackboard and DICOM SIM..
ID	Set the remote code.
All	Restore the default remote code.
YPbPr	Press “YPbPr” to choose component video (YPbPr) input connector source.
Re-SYNC	Automatically synchronizes the projector to the input source.
VGA 1	Press “VGA 1” to choose VGA1-In input connector source.
VGA 2	Press “VGA 2” to choose VGA2-In input connector source.
BNC	Press “BNC” to choose BNC (YPbPr/RG-BHV) input connector source.
S-Video	Press “S-Video” to choose S-Video input connector source.

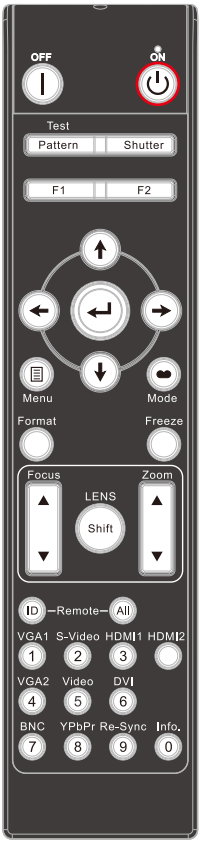

Using the Remote Control

Numbered keypad	Press “0~9” to input a password in the “Security” settings.
Freeze	Press “Freeze” to pause the screen image. Press this button again to unlock.
Shutter	Open/close the built-in shutter.
Function 1	Adjust Function 1 settings.
Lens Focus +/-	Adjust lens focus function.
Enter ↵/ Information ?	↵ Confirm your item selection. ? Display the projector’s information.
Four Directional Select Keys	Use ▲ ▼ ◀ ▶ to select items or make adjustments to your selection.
Menu ▤	Press “Menu” to launch the on-screen display (OSD) menu. To exit OSD, press “Menu” again.
Format	Select the desired aspect ratio (refer to page 33).
Info. (Information)	Display the projection’s information.
HDMI 1	Press “HDMI 1” to choose HDMI 1 input connector source.
HDMI 2	Press “HDMI 2” to choose HDMI 2 input connector source.
Video	Press “Video” to choose composite video source.
DVI	This button is Reserved Key and does not function on this projector.

Using a Wire Remote Control

To connect the projector and remote control with a 3.5mm mini jack commercial cable through the “wire remote in” terminal to control the projector.

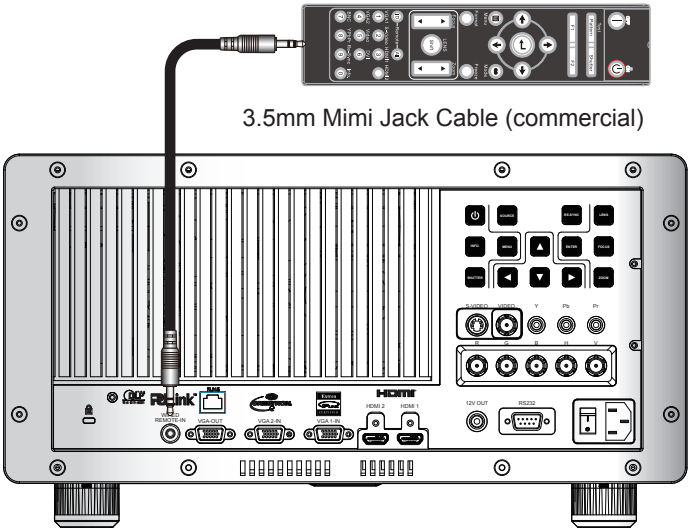

- Use the 3 pin type 3.5mm mini jack cable of length 20mm or less, if the cable length exceed 20m, the remote control may not work normally.

The 3 pin 3.5mm mini jack cable connector is shown below:

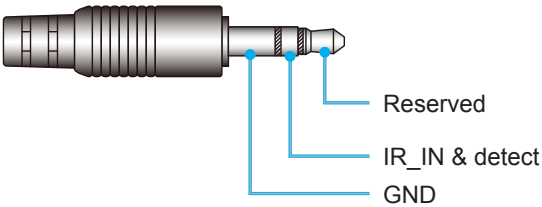

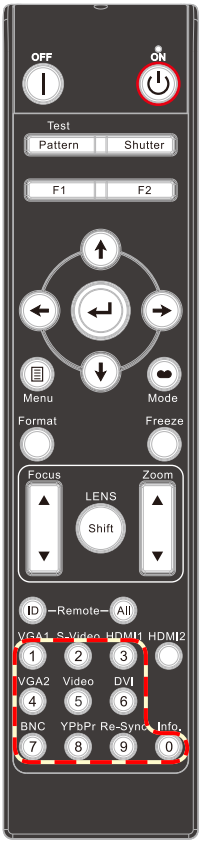

Remote Code Setting

Default code setting (common code): 00

The default code of remote control can be set by pressing "All" key continuously until LED indicator quickly blinking 3 times. (around 3 seconds) Regardless of projector's remote code, the remote control can operate each projector simultaneously if the remote code of remote control is set at default code.

Remote code setting: 01 ~ 99

The remote code of the remote control can be changed by pressing the "ID" continuously until LED indicator slowly blinking (around 3 seconds,), and then pressing double digit numbered buttons (01~99) as the code number. The LED indicator will blink three times quickly as setting success. If the setting process don't be completed in 10 seconds, the process will be time out and keep original remote code.

Sleep mode

Remote control will enter sleep mode as below conditions:

- ❖ No key press
- ❖ Press multi keys simultaneously
- ❖ Press one key over 60 seconds continuously

Backlight

- ❖ Backlight will turn on as pressing any key
- ❖ If backlight turn on 10 seconds continuously and no operated, the backlight will turn off gradually in 5 seconds.

NOTE

- ❖ When remote code is "ALL (00)", this remote can control any projector. When remote code is "0~99", this remote only can control the projector with same remote code in OSD (detail page 51):
  Press "Info."(detail in page 54) can show what is remote code (Active) in remote and what is the remote code setting in projector.

On-screen Display Menus

The Projector has multilingual On-screen Display menus that allow you to make image adjustments and change a variety of settings.

How to operate

1. To open the OSD menu, press “Menu” on the Remote Control or Projector Keypad.
2 When OSD is displayed, use ◀ ▶ keys to select any item in the main menu. While making a selection on a particular page, press ▼ or “Enter” key to enter sub menu.
3. Use ▲ ▼ keys to select the desired item and adjust the settings using ◀ ▶ key.
4. Select the next item to be adjusted in the sub menu and adjust as described above.
5. Press “Enter” to confirm, and the screen will return to the main menu.
6. To exit, press “MENU” again. The OSD menu will close and the projector will automatically save the new settings.

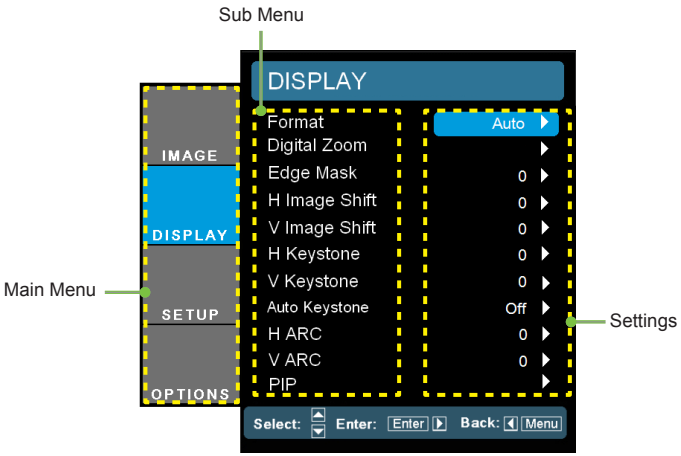

Menu Tree

Main Menu	Sub Menu			Settings
Image	Display Mode			Presentation / Bright / Movie / sRGB / Blackboard / DICOM SIM.
	Brightness			-50 ~ +50
	Contrast			-50 ~ +50
	Sharpness			0~15
	#1 Color			-50 ~ +50
	#1 Tint			-50 ~ +50
	Advanced	Noise Reduction		0 ~ 10
		BrilliantColor™		0 ~ 10
		Gamma		Film / Graphics / 1.8 / 2.0 / 2.2 / 2.6
		True Vivid		0 ~ 5
		Color Temp.		Warm / Medium / Cold
		Color Space		AUTO / RGB / YUV
				#2 AUTO / RGB(0-255) / RGB(16-235) / YUV
		Dynamic Black		On / Off
		RGB Gain/Bias		Red Gain / Green Gain / Blue Gain / Red Bias / Green Bias / Blue Bias / Reset / Exit
		Color Matching	Red / Green / Blue / Cyan / Magenta / Yellow /	Hue / Saturation / Gain
			White	Red / Green / Blue
			Reset	
			Exit	
		Input Source		HDMI 1 / HDMI 2 / BNC / VGA1 / VGA2 / Component / S-Video / Video / Exit
Display	Format			4:3 / 16:9 / 16:10 / LBX / Native / AUTO
	Digital Zoom	Zoom		-20 ~ +50
		H Zoom		0 ~ 100
		V Zoom		0 ~ 100
		Exit		
	Edge Mask			0 ~ 5
	H Image Shift			-100 ~ +100
	V Image Shift			-100 ~ +100
	H Keystone			-20 ~ +20
	V Keystone			-20 ~ +20
	Auto Keystone			On / Off
	H ARC			-10 ~ +10
	V ARC			-10 ~ +10
	PIP	Screen		
		PIP Location		
		PIP Size		1/16, 1/25, 1/36
		PIP Source		
		Swap		
		Exit		
Setup	Language			**English / Deutsch / Français / Italiano / Español / Português / Svenska / Nederlands / Norsk/Dansk / Polski / Suomi / Русский / ελληνικά / Magyar / Čeština / فارسی / عربي /繁體中文 / 简体中文 / Việt /한국어 / ไทย / Türkçe**
	Projection			
	#3 Screen Type			16:10 (1920 x 1200) / 16:9 (1920 x 1080)
	Menu Location			
	Lens Function	Focus		
		Zoom		
		Lens Shift		
		Lens Function		Lock / Unlock
		Lens Type		WT1 / WT2 / ST1 / TZ1 / TZ2
		Lens Calibration		Yes / No
	Security	Security		On / Off
		Security Timer		Month / Day / Hour
		Change Password		

Main Menu	Sub Menu	Settings		
Setup	Signal (RGB)	Automatic		Enable / Disable
		Phase		0 ~ 63
		Frequency		-5 ~ +5
		H. Position		-5 ~ +5
		V. Position		-5 ~ +5
	Signal (Video)	White Level		0 ~ 31
		Black Level		-5 ~ +5
		Saturation		-5 ~ +5
		Hue		-5 ~ +5
		IRE		0 / 7.5
	Projector ID			00 ~ 99
	Advanced	Logo		Optoma / Neutral / User
		Logo Capture		
		Closed Captioning		Off / CC1 / CC2
	Network	LAN Settings	Network State	
			DHCP	
			IP Address	
			Subnet mask	
			Gateway	
			DNS	
			Apply	Yes / No
			MAC Address	
		Control Settings	Crestron	On / Off
			Extron	On / Off
			AMX Device Discovery	On / Off
			Telnet	On / Off
			PJ Link	On / Off
Option	Source Lock			On / Off
	High Altitude			On / Off
	Information Hide			On / Off
	Keypad Lock			On / Off
	Display Mode Lock			On / Off
	Test Pattern			None / Grid / Grid / Grid / White
	Background Color			Black / Red / Blue / Green / White
	Remote Settings	Function 1		Brightness / PIP / Color Matching / Zoom / Projection / V ARC+ / H ARC+
		Function 2		Contrast / PIP Source / PIP Swap / Color / V ARC- / H ARC- / Lamp Settings
		IR Function		On / Front / Top / Off
		Remote Code		All / 1~99
	12V Trigger			On / Off
	Advanced	Direct Power On		On / Off
		Signal Power On		On / Off
		Auto Power Off (min.)		0 ~ 180
		Sleep Timer (min.)		0 ~ 995
		Power Mode (Standby)		Eco. / Active
	Lamp Settings	Lamp Mode		Dual / Relay / Lamp 1 / Lamp 2
		Lamp 1 Hours		
		Lamp 2 Hours		
		Lamp 1 Reset		Yes / No
		Lamp 2 Reset		Yes / No
		Lamp Reminder		On / Off
		Brightness Mode		Bright / STD / Power
		Power		350W / 340W / 330W / 320W / 310W / 300W / 290W / 280W
	VGA Out			Auto / VGA 1 / VGA 2
	Information			
	Reset			Yes / No

NOTE

- Please note that the on-screen display (OSD) menus vary according to the signal type selected and the projector model you are using.
- (#1) “Color” and “Tint” are only supported in Video mode.
- (#2) For HDMI model only.
- (#3) Input 1920x1200 or 1600x1200 resolution, 16:9 selection of screen type and format will be gray out.

IMAGE

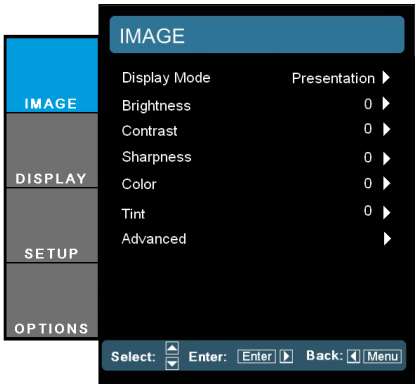

Display Mode

There are many factory presets optimized for various types of images.

- Presentation: Good color and brightness from PC input.
- Bright: Maximum brightness from PC input.
- Movie: For home theater.
- sRGB: Standardised accurate color.
- Blackboard: This mode should be selected to achieve optimum color settings when projecting onto a blackboard (green).
- DICOM SIM.: This display mode simulates the greyscale/gamma performance of equipment used for “Digital Imaging and Communications in Medicine” (DICOM).

  IMPORTANT: This mode should NEVER be used for medical diagnosis, it is for education/training purposes only.

Brightness

Adjust the brightness of the image.

- Press the ◀ to darken image.
- Press the ▶ to lighten the image.

Contrast

The contrast controls the degree of difference between the lightest and darkest parts of the picture.

- Press the ◀ to decrease the contrast.
- Press the ▶ to increase the contrast.

Sharpness

Adjust the sharpness of the image.

- Press the ◀ to decrease the sharpness.
- Press the ▶ to increase the sharpness.

Color

Adjust a video image from black and white to fully saturated color.

- Press the ◀ to decrease the amount of saturation in the image.
- Press the ▶ to increase the amount of saturation in the image.

Tint

Adjust the color balance of red and green.

- Press the ◀ to increase the amount of green in the image.
- Press the ▶ to increase the amount of red in the image.

NOTE

- "Color" and "Tint" functions are only supported under Video mode.

IMAGE | Advanced

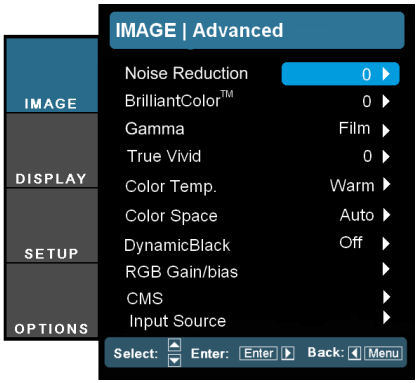

Noise Reduction

The motion Adaptive Noise Reduction reduces the amount of visible noise interlaced signals. The range is from “0” to “10”. (0: Off)

BrilliantColor™

This adjustable item utilizes a new color-processing algorithm and system level enhancements to enable higher brightness while providing true, more vibrant colors in picture. The range is from “0” to “10”. If you prefer a stronger enhanced image, adjust toward the maximum setting. For a smoother, more natural image, adjust toward the minimum setting.

Gamma

This allows you to set up gamma curve type. After the initial setup and fine tuning is completed, utilize the Gamma Adjustment steps to optimize your image output. Choose the Gamma type from Film, Graphics, 1.8, 2.0, 2.2 or 2.6

True Vivid

This adjustable item utilizes a new color-processing algorithm and enhancements to enable the picture’s vividness to be significantly increased.

Color Temp

If set to cold temperature, the image looks more blue. (cold image)
If set to warm temperature, the image looks more red.
(warm image)

NOTE

❖ (*) For HDMI only.

Color Space

Select an appropriate color matrix type from AUTO, RGB, RGB(0-255)(*) RGB(16-235)(*) or YUV.

Dynamic Black

Dynamic Black enables the projector to automatically optimize the the brightness of the display during dark/light movie scenes to be shown in incredible detail.

RGB Gain/Bias

Press ↵ into the next menu as below and then use ▲ or ▼ to select item.

- Red Gain/Green Gain/Blue Gain/Red Bias/Green Bias/Blue Bias: Use ◀ or ▶ to Red, Green, or Blue for brightness (Gain) and contrast (Bias).
- Reset: Choose “Yes” to return the factory default settings for color adjustments.

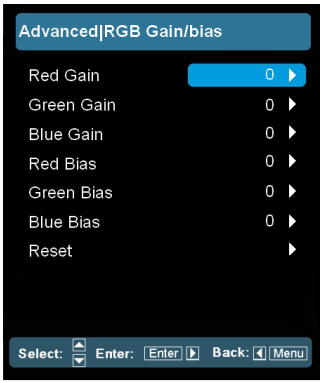

NOTE

❖ CMS means “Color Matching System (CMS)”.

Color Matching

Press ↵ into the next menu as below and then use ▲ or ▼ to select item.

- Red/Green/Blue/Cyan/Magenta/Yellow: Use ◀ or ▶ to select Hue, Saturation and Gain Colors.

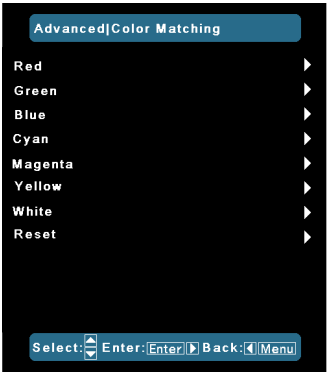

- Hue/Saturation/Gain/Exit: Using Hue, Saturation and Gain setting to adjust the color is selecting.

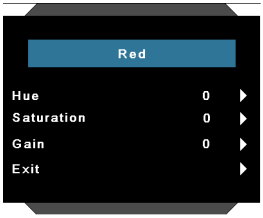

- White: Use ◀ or ▶ to select Red, Green and Blue Colors.
- R/G/B/Exit : Using R (Red) ,G (Green) and B(Blue) settings to adjust the color temperature of white point.

- Reset: Choose “Yes” to return the factory default settings for color adjustments.

Input Source

Use this option to enable / disable input sources. Press ↵ to enter the sub menu and select which sources you require. Press “Enter” to finalize the selection. The projector will not search for inputs that are not selected.

DISPLAY

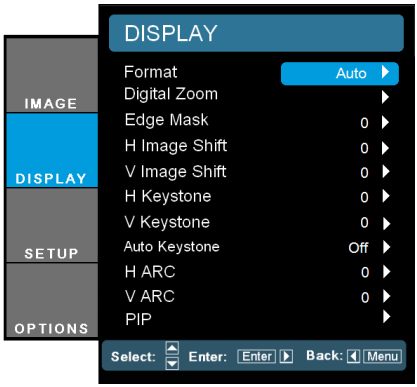

Format

Use this function to choose your desired aspect ratio.

- 4:3: This format is for 4×3 input sources.
- 16:9: This format is for 16×9 input sources, like HDTV and DVD enhanced for Wide screen TV.
- 16:10: This format is for 16x10 input sources like high resolution computer graphical applications and for large workspace for report viewing.
- LBX: This format is for non-16x9, letterbox source and for users who use external 16x9 lens to display 2.35:1 aspect ratio using full resolution.
- Native: This format displays the original image without any scaling.
- AUTO: Automatically selects the appropriate display format.

16:10 Screen	480i/p	576i/p	1080i/p	720p	PC
4:3	1600 x 1200 center				
16:9	1920 x 1080 center				
16:10	1920 x 1200 center				
LBX	1920 x 1440 center, then get the central 1920 x 1200 image to display				
Native	No resize image, 1:1 mapping and centered. This format shows original image without scaling.				

Auto	If this format is select, Screen type will auto become 16:10 (1920 x 1200) If source is 4:3, auto resize to 1600 x1200 If source is 16:9 auto resize to 1920x1080 If source is 16:10 auto resize to 1920x1200

16:9 Screen	480i/p	576i/p	1080i/p	720p	PC
4:3	1440 x 1080 center				
16:9	1920 x 1080 center				
LBX	1920 x 1440 center, then get the central 1920 x 1080 image to display				
Native	No resize image, 1:1 mapping and centered. This format shows original image without scaling.				
Auto	If this format is select, Screen type will auto become 16:9 (1920x1080) If source is 4:3, auto resize to 1440 x1080 If source is 16:9 auto resize to 1920x1080 If source is 16:10 auto resize to 1920 x 1200 and cut 1920x1080 area to display				

- 16:9 or 16:10 depend on “Screen Type” setting.
- 16:9 screen type is not supported when input source is 1920x1200 or 1600x1200.

- Each I/O has different setting of “Edge Make”.
- “Edge Make” and “Digital Zoom” can’t work at same time.

Digital Zoom

- Zoom: Press the ◀ or ▶ to reduce or magnify the size of an image.
- H Zoom: Press the ◀ or ▶ to zoom out or zoom in the projected image horizontally.
- V Zoom: Press the ◀ or ▶ to zoom out or zoom in the projected image vertically.

Edge Mask

Edge mask function removes the noise in a video image. Edge mask the image to remove video encoding noise on the edge of video source.

H Image Shift

Shift the projected image position horizontally.

V Image Shift

Shift the projected image position vertically.

H Keystone

Press the ◀ or ▶ to adjust image distortion horizontally. If the image looks trapezoidal, this option can help make the image rectangular.

V Keystone

Press the ◀ or ▶ to adjust image distortion vertically. If the image looks trapezoidal, this option can help make the image rectangular.

Auto Keystone

Automatically adjusts vertical image distortion.

H ARC

Corrects optical pincushion distortion horizontally.

V ARC

Corrects optical pincushion distortion vertically.

DISPLAY | PIP

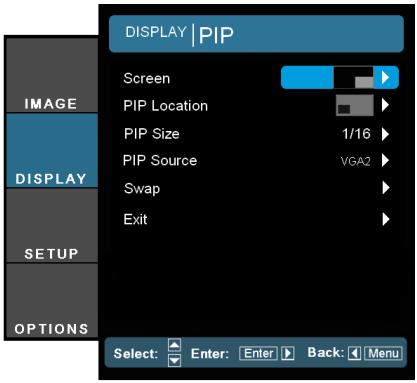

Screen

- Single: Projection single screen.
- PIP Window: Main Screen is large screen; PIP Screen is small and displays in the corner of the main screen.
- Split Screen: Main Screen and PIP Screen equal size and side by side.

PIP Location

Choose the PIP screen position on the display screen.

PIP Size

Choose the PIP size from 1/16, 1/25 or 1/36 on the display screen.

PIP Source

Choose the PIP source to switch PIP screen source.

Swap

Press ↵ to swap main screen and PIP screen.

Some source/signal combinations may not be compatible with PIP function. Please refer to the table below:

		VGA-2		HDMI-2		YPbPr
		Static Images	Full Motion Video	Static Images	Full Motion Video	Video
VGA-1	Static	Yes	-	Yes	-	-
	Dynamic	-	-	-	-	-
HDMI-1	Static	Yes	-	Yes	-	-
	Dynamic	-	-	-	-	-
BNC (RGB)	Static	Yes	-	Yes	Yes	-
	Dynamic	-	-	Yes	Yes	-
Video	Dynamic	Yes	-	-	-	-
S-Video	Dynamic	Yes	-	Yes	Yes	-

❖ If you still experience issues, try altering the refresh rate or resolution of one or more of the source devices.

SETUP

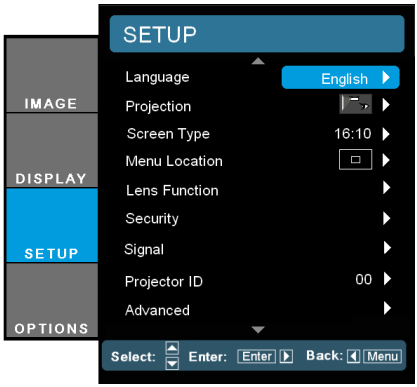

Language

Choose the multilingual OSD menu. Press ◀ or ▶ into the sub menu and then use the ▲ or ▼ key to select your preferred language. Press "Enter" to finalize the selection.

❖ Rear-Desktop and Rear-Ceiling are to be used with a translucent screen.

Projection

Front-Desktop

This is the default selection. The image is projected straight on the screen.

Rear-Desktop

When selected, the image will appear reversed.

- Front-Ceiling

When selected, the image will turn upside down.

- Rear-Ceiling

When selected, the image will appear reversed in upside down position.

Screen Type

Choose the screen type from16:10 (1920 x 1200) or 16:9 (1920 x 1080).

Menu Location

Choose the menu location on the display screen.

Projector ID

ID definition can be set up by menu (range 0-99), and allow user control an individual projector by RS232. Refer to pages 65-68 for the complete list of RS232 commands.

SETUP | Lens Function

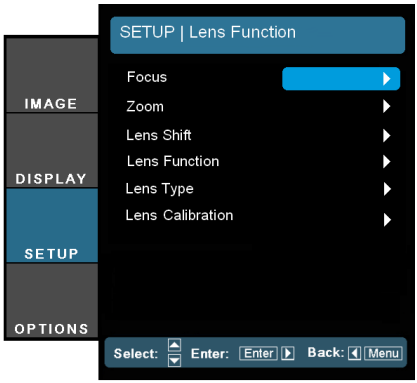

Focus

Adjust focus function on the projected image.

Zoom (Optical Zoom)

Adjust zoom function on the projected image.

Lens Shift

Adjust the lens shift up/down/left/right.

Lens Function

Shift the projected image.

- Lock: This function can not be used by user.
- Unlock: This function can be used by user.

Lens Type

Choose the lens type from WT1, WT2, ST1, TZ1 or TZ2.

Lens Calibration

Perform calibration and return lens to the center position.

SETUP | Security

Security

- On: Choose “On” to use security verification when turning on projector.
- Off: Choose “Off” to be able to switch on the projector without password verification.

NOTE

❖ Password default value is “1234” (first time).

Security Timer

Use this function to set the how long (Month/Day/Hour) the projector can be used. Once this time has elapsed you will be requested to enter your password again.

Change Password

- First time:

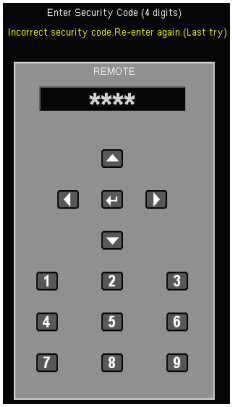

1. Press “↵” to set the password.
2. The password has to be 4 digits.
3. Use number button on the remote to enter your new password and then press “↵” key to confirm your password.

- Change Password:

1. Press “↵” to input old password.
2. Use number button to enter current password and then press “↵” to confirm.
3. Enter new password (4 digits in length) using the number buttons on the remote, then press “↵” to confirm.
4. Enter new password again and press “↵” to confirm.

- If the incorrect password is entered 3 times, the projector will automatically shut down.
- If you have forgotten your password, please contact your local office for support.

NOTE

- Always keep the password in your files. If the password is forgotten or lost, the projector will have to be sent to your local authorized service center.

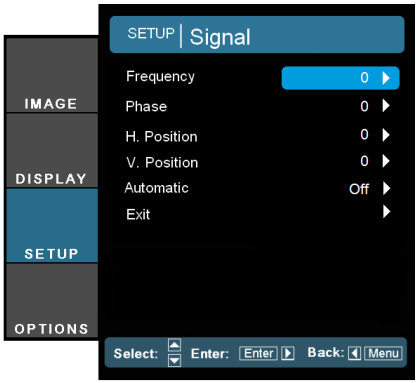

SETUP | Signal (RGB)

NOTE

- "Signal" is only supported in Analog VGA (RGB) signal.

Frequency

Change the display data frequency to match the frequency of your computer's graphic card. Use this function only if the image appears to flicker vertically.

Phase

Synchronize the signal timing of the display with the graphic card. If the image appears to be unstable or flickers, use this function to correct it.

H. Position

- Press the ◀ to move the image left.
- Press the ▶ to move the image right.

V. Position

- Press the ◀ to move the image down.
- Press the ▶ to move the image up.

Automatic

Automatically detects the signal. If you use this function, the Phase, frequency items are grayed out, and if Signal is not automatic, the phase, frequency items will appear for user to manually tune and saved in settings after that for next time projector turns off and on again.

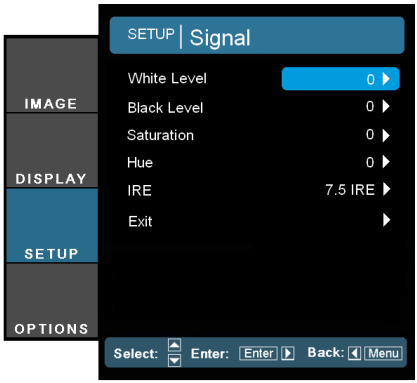

SETUP | Signal (Video)

NOTE

- "Signal" is not supported when the source is HDMI or DVI-D.

White Level

Allow user adjust White Level when inputting S-Video or Video/ CVBS signals.

Black Level

Allow user adjust Black Level when inputting S-Video or Video/ CVBS signals.

Saturation

Adjust a video image from black and white to fully saturated color.

- Press the ◀ to decrease the amount of saturation in the image.
- Press the ▶ to increase the amount of saturation in the image.

Hue

Adjust the color balance of red and green.

- Press the ◀ to increase the amount of green in the image.
- Press the ▶ to increase the amount of red in the image.

NOTE

- "IRE" is only supported on NTSC signal.

IRE

Adjust measurement of composite video signals.

SETUP | Advanced

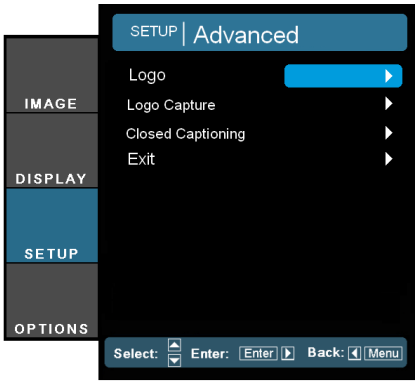

Logo

Use this function to set the desired startup screen. If changes are made they will take effect the next time the projector is powered on.

- Optoma: The default startup screen.
- Neutral: Logo is not displayed on startup screen.
- User: Use stored picture from “Logo Capture” function.

Logo Capture

Press ↵ to capture an image of the picture currently displayed on screen.

Closed Captioning

If changes are made they will take effect the next time the projector is powered on.

- Off: select “off” to turn off the closed captioning feature.
- CC1: CC1 language: American English.
- CC2: CC2 language (depending on the TV channel of the user):Spanish, French, Portuguese, German, Danish.

NOTE

- For successful logo capture, please ensure that the input signal does not exceed the projector’s native resolution. (1920x1200 or 1920x1080).
- Do not use signal with de-interlace.
- Do not turn off the projector during logo capturing.

SETUP | Network | LAN Settings

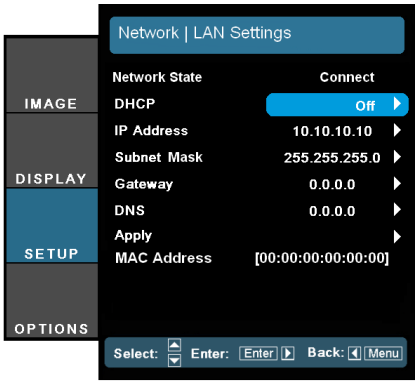

Network State

Display the network connection status.

DHCP

Use this function to select your desired startup screen. If you change the setting from one to another, when you exit the OSD menu, the new setting will take effect on next open.

- On: Assign an IP address to the projector from an external DHCP server automatically.
- Off: Assign an IP address manually.

IP Address

Select an IP address.

Subnet Mask

Select subnet mask number.

Gateway

Select the default gateway of the network connected to the projector.

DNS

Select DNS number.

Apply

Press "↵" and then choose "Yes" to apply the selection.

MAC Address

Display an MAC address.

How to use web browser to control your projector

1. Turn on DHCP to allow the DHCP server to automatically assign an IP, or manually enter the required network information.

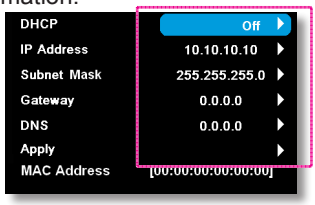

2. Then choose apply and press "↵" button to complete the configuration process.
3. Open your web browser and type in the projector's IP address from the OSD LAN screen. The following web page will display as below:

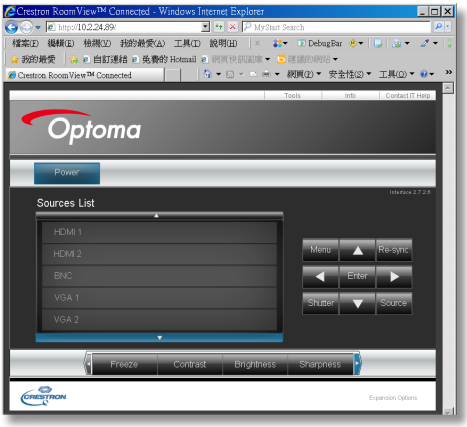

4. If connecting the projector to external Crestron control hardware, the settings can be found in the [tools] tab. (see picture).

Please note, each field can only contain a limited number of characters, as shown in the table below. (spaces and the other punctuation included):

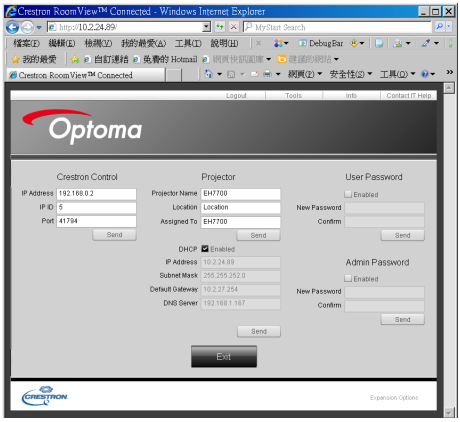

Category	Item	Input-Length (characters)
Crestron Control	IP Address	15
	IP ID	2
	Port	5
Projector	Projector Name	10
	Location	9
	Assigned To	9
Network Configuration	DHCP (Enabled)	(N/A)
	IP Address	15
	Subnet Mask	15
	Default Gateway	15
	DNS Server	15
User Password	Enabled	(N/A)
	New Password	15
	Confirm	15
Admin Password	Enabled	(N/A)
	New Password	15
	Confirm	15
Source List	HDMI1, HDMI2, BNC, VGA1, VGA2, Component, S-Video, Video.	
The adjust list bottom	Freeze, Contrast, Brightness, Sharpness, Digital Zoom, Zoom, Focus.	

When making a direct connection from your computer to the projector

Step 1: Find an IP Address (192.168.0.100) from LAN function of projector.

Step 2: Select apply and press “Enter” button to submit function or press “menu” key to exit.

Step 3: To open Network Connections, click **Start**, click **Control Panel**, click **Network and Internet Connections**, and then click **Network Connections**. Click the connection you want to configure, and then, under **Network Tasks** , click **Change settings of this connection**.

Step 4: On the **General** tab, under **This connection uses the following items**, click **Internet Protocol (TCP/IP)**, and then click “Properties.”

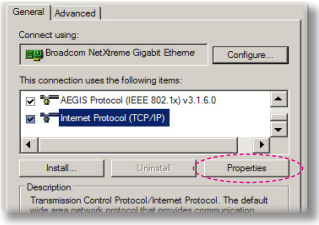

Step 5: Click **Use the following IP address**, and type in as below:

1) IP address: 192.168.0.100

2) Subnet mask: 255.255.255.0

3) Default gateway:192.168.0.254

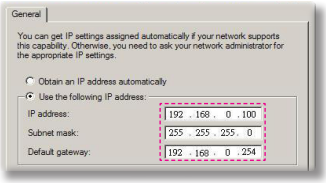

Step 6: To open Internet Options, click IE web browser, click Internet Options, click the **Connections tab** and click “LAN Settings...”

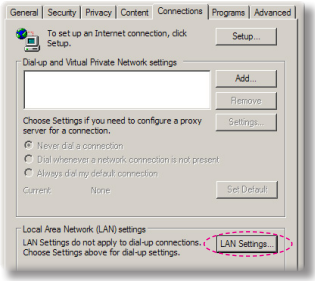

Step 7: The **Local Area Network (LAN) Setting** dialog box appears**,** In the **Proxy Server area**, cancel the **Use a proxy server for your LAN check box**., then click “OK” button twice.

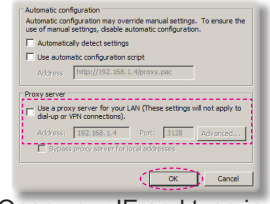

Step 8: Open your IE and type in the IP address of 192.168.0.100 in the URL then press “Enter” key.

SETUP | Network | Control Settings

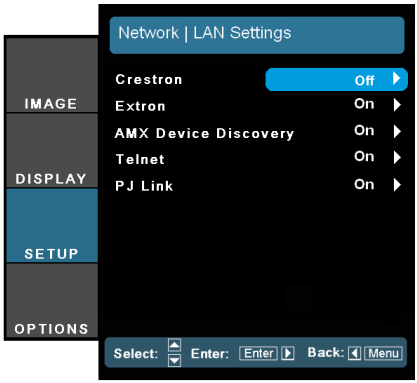

NOTE

- Control Settings: Allow you to configure network settings.

Creston

Turn on or off Crestron. (Note: Port 41794)

Extron

Turn on or off Extron. (Note: Port 2023)

AMX Device Discovery

Turn on or off AMX Device Discovery. (Note: Port 1023)

Telnet

Turn on or off Telnet. (Note: Port 23)

PJ Link

Turn on or off PJ Link. (Note: Port 4352)

OPTION

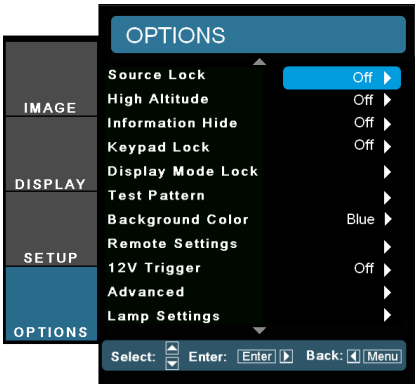

Source Lock

- On: The projector will only search current input connection.
- Off: The projector will search for other signals if the current input signal is lost.

High Altitude

When “On” is selected, the fans will spin faster. This feature is useful in high altitude areas where the air is thin.

Information Hide

- On: Choose “On” to hide the info message.
- Off: Choose “Off” to show the “searching” message.

Keypad Lock

When the keypad lock function is “On”, the control panel will be locked however, the projector can be operated by the remote control. By selecting “Off”, you will be able to reuse the control panel.

Display Mode Lock

Choose “On” or “Off” to lock or unlock adjusting display mode settings.

Test Pattern

Display a test pattern. There are Grid(*), White pattern and None.

Background Color

Use this feature to display a “Black”, “Red”, “Blue”, “Green” or “White”, screen when no signal is available.

NOTE

- Press direct source key on remote controller, it will change source directly and automatically set the Source Lock to “ON”.
- To turn off the keypad lock, press and hold “Enter” key on top of the projector for 5 seconds.
- (*) There are 3 Grid. 1st Grid in White, 2nd Grid in Green, 3rd Grid in Magenda.
- When “Display Mode Lock” is “On”, the all setting under display mode will be gray out.

12V Trigger

12V trigger provides a standard trigger for motorized screens.

VGA Out

Use this feature to display the screen from input source.

- Auto: In standby mode (active), the default VGA out loops through from VGA1; unless VGA2 locked in last operation, VGA2 will loop through to VGA out.
- VGA 1: Choose the VGA 1-In input connector.
- VGA 2: Choose the VGA 2-In input connector.

Reset

Choose “Yes” to return the display parameters on all menus to the factory default settings.

OPTION | Remote Settings

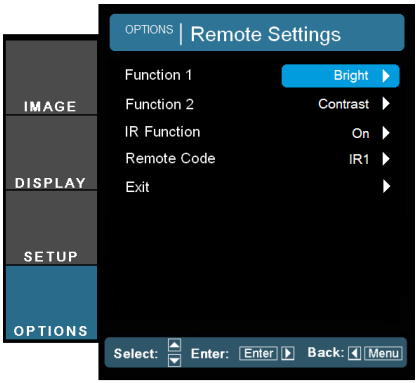

- Default setting of “Function 1” is “Color Matching”.
- Default setting of “Function 2” is “Contrast”.

Function 1

Choose your desired function from “Brightness” , “PIP”, “Color Matching”, “Zoom”, “Projection”, “V ARC+” or “H ARC+”.

Function 2

Choose your desired function from “Contrast” , “PIP Source”, “PIP Swap”, “Color”, “V ARC-”, “H ARC-” or “Lamp Settings”.

IR Function

- On: Choose “On”, the projector can be operated by the remote control.
- Front: Choose “Front”, the projector can be operated by the remote control from front IR receiver.
- Top: Choose “Top”, the projector can be operated by the remote control from top IR receiver.
- Off: Choose “Off”, you will only be able to use the control panel keys.

Remote Code

Set remote code of the projector. (refer to page 24)

- Default code (common code): 00
- Remote code: 01-99

OPTION | Advanced

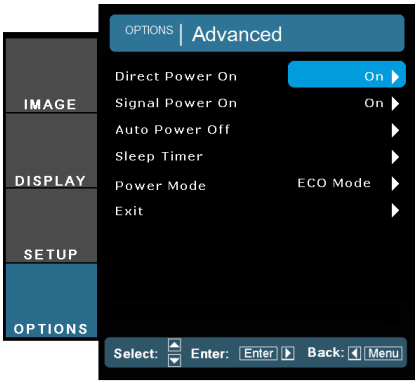

Direct Power On

Choose “On” to activate Direct Power mode. The projector will automatically power on when AC power is supplied, without pressing the “⏻” key on the projector control panel or on the remote control.

Signal Power On

The projector will power on when it receives a signal. This eliminates the need to use the “Power” button on the remote control or the projector keypad.

Auto Power Off (min)

Sets the countdown timer interval. The countdown timer will start, when there is no signal being sent to the projector. The projector will automatically power off when the countdown has finished (in minutes).

Sleep Timer (min)

Sets the countdown timer interval. The countdown timer will start, with or without a signal being sent to the projector. The projector will automatically power off when the countdown has finished (in minutes).

Power Mode (Standby)

- Eco.: Choose “Eco.” to save power dissipation further < 0.5W.
- Active: Choose “Active” to return to normal standby and the VGA out port will be enabled.

NOTE

- Eco (<0.5W) mode will disable the VGA-out and RJ45 function when the projector is in standby.

OPTION | Lamp Settings

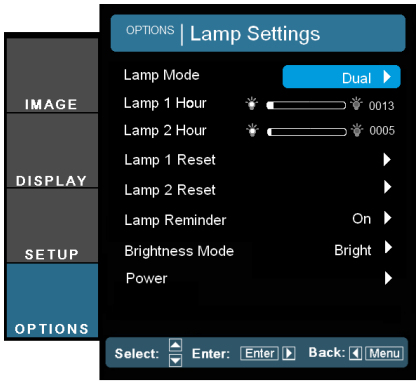

Lamp Mode

Select single/dual lamp mode of the projector.

- Dual: Default value for this function.
- Relay: When the difference in lamp life between the two lamps reaches 48 hours, the system will automatically switch to the lamp with the lower usage.
- Lamp 1: One lamp illuminates. (Lamp1 is always used.)
- Lamp 2: One lamp illuminates. (Lamp2 is always used.)

Lamp 1 Hour

Display the projection time for lamp 1.

Lamp 2 Hour

Display the projection time for lamp 2.

Lamp 1 Reset

Reset the lamp hour counter after replacing the lamp for lamp 1.

Lamp 2 Reset

Reset the lamp hour counter after replacing the lamp for lamp 2.

Lamp Reminder

Choose this function to show or to hide the warning message when the changing lamp message is displayed.
The message will appear 30 hours before suggested replacement of lamp.

Brightness Mode

- BRIGHT: Choose “BRIGHT” to increase the brightness.
- STD: Choose “STD” to dim the projector lamp which will lower power consumption and extend the lamp life.
- Power: Select the lamp power. When you choose this function, you can select the lamp power type.

	Bright	STD	Power
Lamp Power	350W	280W	280W / 290W / 300W / 310W / 320W / 330W / 340W / 350W

Power

Choose lamp power type from “350W”, “340W”, “330W”, “320W”, “310W”, “300W”, “290W”, or “280W”.

OPTION | Information

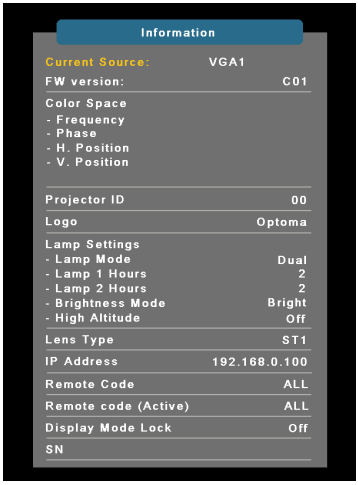

Information

Display the projector information for source, resolution, and software version on the screen.

Troubleshooting

If you experience a problem with your projector, please refer to the following information. If a problem persists, please contact your local reseller or service center.

? No image appears on-screen

- Ensure all the cables and power connections are correctly and securely connected as described in the “Installation” section.
- Ensure all the pins of connectors are not bent or broken.
- Check if the projection lamp has been securely installed. Please refer to the “Replacing the lamp” section.
- Make sure you have removed the lens cap and the projector is switched on.
- Ensure that the “Shutter” feature is not turned on.

? Partial, scrolling or incorrectly displayed image

- Press “Re-SYNC” on the remote control or control panel.
- If you are using a PC:

  For Windows 95, 98, 2000, XP, Windows 7:

  1. Open the “My Computer” icon, the “Control Panel” folder, and then double click on the “Display” icon.
  2. Select the “Settings” tab.
  3. Verify that your display resolution setting is lower than or equal to WUXGA (1920 × 1200).
  4. Click on the “Advanced Properties” button.

  If the projector is still not projecting the whole image, you will also need to change the monitor display you are using. Refer to the following steps.

  5. Verify the resolution setting is lower than or equal to WUXGA (1920 × 1200).
  6. Select the “Change” button under the “Monitor” tab.

7. Click on “Show all devices”. Next, select “Standard monitor types” under the SP box; choose the resolution mode you need under the “Models” box.
8. Verify that the resolution setting of the monitor display is lower than or equal to WUXGA (1920 × 1200).

- If you are using a Notebook:
  1. First, follow the steps above to adjust resolution of the computer.
  2. Press the appropriate keys listed below for your notebook manufacturer to send signal out from notebook to projector. Example: [Fn]+[F4]

Acer ⇨	[Fn]+[F5]	IBM/Lenovo ⇨	[Fn]+[F7]
Asus ⇨	[Fn]+[F8]	HP/Compaq ⇨	[Fn]+[F4]
Dell ⇨	[Fn]+[F8]	NEC ⇨	[Fn]+[F3]
Gateway ⇨	[Fn]+[F4]	Toshiba ⇨	[Fn]+[F5]

Mac Apple:
System Preference ⇨ Display ⇨ Arrangement ⇨ Mirror display

- If you experience difficulty changing resolutions or your monitor freezes, restart all equipment including the projector.

? The screen of the Notebook or PowerBook computer is not displaying your presentation

- If you are using a Notebook PC
  Some Notebook PCs may deactivate their own screens when a second display device is in use. Each has a different way to be reactivated. Refer to your computer’s manual for detailed information.

? Image is unstable or flickering

- Use “Phase” to correct it. See page 42 for more information.
- Change the monitor color setting on your computer.

? Image has vertical flickering bar

- Use “Frequency” to make an adjustment. See page 42 for more information.
- Check and re-configure the display mode of your graphic card to make it compatible with the projector.

Image is out of focus

- Make sure the projector cap is removed.
- Adjust the Focus function on the projector lens.
- Make sure the projection screen is between the required distance. See pages 18-19.

The image is stretched when displaying 16:9 DVD title

- When you play anamorphic DVD or 16:9 DVD, the projector will show the best image when the projector display mode is set to 16:9 in the OSD.
- If you play 4:3 format DVD titles, please change the format to 4:3 in the projector OSD.
- If the image is still stretched, you will also need to adjust the aspect ratio by referring to the following:
- Please setup the display format as 16:9 (wide) aspect ratio type on your DVD player.

Image is too small or too large

- Move the projector closer to or further from the screen.
- Press “Menu” button on the remote control or projector panel, go to “DISPLAY → Format” and try the different settings.

NOTE

- Use of Keystone is not recommended.

Image has slanted sides

- If possible, reposition the projector so that it is horizontally centered on the screen and below the bottom of the screen.
- Press “Keystone” button on the remote control, until the sides are vertical.

Image is reversed

- Select “SETUP → Projection” from the OSD and adjust the projection direction.

The projector stops responding to all controls

- If possible, turn off the projector, then unplug the power cord and wait at least 60 seconds before reconnecting power.
- Check that “Keypad Lock” is not activated by trying to control the projector with the remote control.

Lamp burns out or makes a popping sound

- When the lamp reaches its end of life, it will burn out and may make a loud popping sound. If this happens, the projector will not turn on until the lamp module has been replaced. To replace the lamp, follow the procedures in the “Replacing the Lamp” section on pages 60-61.

LED lighting message

Message	POWER LED	Temp LED	Lamp LED 1	Lamp LED 2
	(Red/Blue)	(Red)	(Amber)	(Amber)
Standby State (Input power cord & Switch on)	Flashing Red	○	○	○
Power on (Warm-ing)	Flashing Blue	○	○	○
Lamp lighting	Blue	○	○	○
Power off (Cooling)	Flashing Blue	○	○	○
Error (Lamp 1 fail)	Flashing Red	○	☼	○
Error (Lamp 2 fail)	Flashing Red	○	○	☼
Error (Fan fail)	Flashing Red	Flashing	○	○
Error (Over Temp.)	Flashing Red	☼	○	○
Error (Lens shift)	Flashing Red	○	☼	☼
Shutter on	Red/Blue Steady light	○	○	○

NOTE

Steady light ⇨ ☼

No light ⇨ ○

On Screen Messages

- Temperature warning:

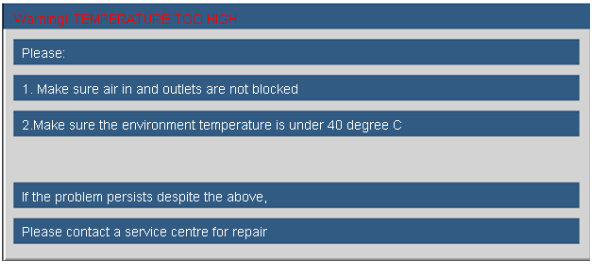

- Fan failed:

- Lamp warning:

- Out of display range:

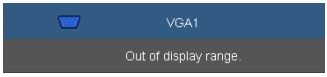

If the remote control does not work

- Check the operating angle of the remote control is within ±15° both horizontally and vertically of one of the IR receivers on the projector.
- Make sure there are not any obstructions between the remote control and the projector. Move to within 7 m (±0°) of the projector.
- Make sure the batteries are inserted correctly.
- Replace batteries if they are exhausted.
- Ensure that you have set your remote to the correct IR code set (see page 24).

Replacing the lamp

The projector automatically detects the lamp life. When the lamp life is nearing the end of use, you will receive a warning message.

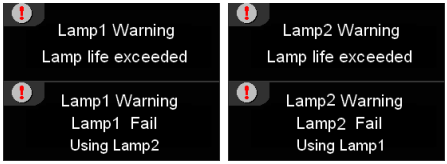

When you see this message, please contact your local reseller or service center to change the lamp as soon as possible. Make sure the projector has been cooled down for at least 30 minutes before changing the lamp.

CAUTION!

HIGH PRESSURE LAMP MAY EXPLODE IF IMPROPERLY HANDED. REFER TO LAMP REPLACEMENT INSTRUCTIONS.

ATTENTION:

Les lampes à haute pression peuvent exploser si elles sont mal utilisées.

Confier l'entretien à une personne qualifiée.

⚠ Warning: If ceiling mounted, please use caution when opening the lamp access panel. It is recommended to wear safety glasses if changing the bulb when ceiling mounted. “Caution must be used to prevent any loose parts from falling out of projector.”

⚠ Warning: Lamp compartment may be hot! Allow it to cool down before changing the lamp!

⚠ Warning: To reduce the risk of personal injury, do not drop the lamp module or touch the lamp bulb. The bulb may shatter and cause injury if it is dropped.

- The screws on the lamp cover and the lamp cannot be removed.
- The projector cannot be turned on if the lamp cover has not been placed back on the projector.
- Do not touch the glass area of the lamp. Hand oil can cause the lamp to shatter. Use a dry cloth to clean the lamp module if it was accidentally touched.

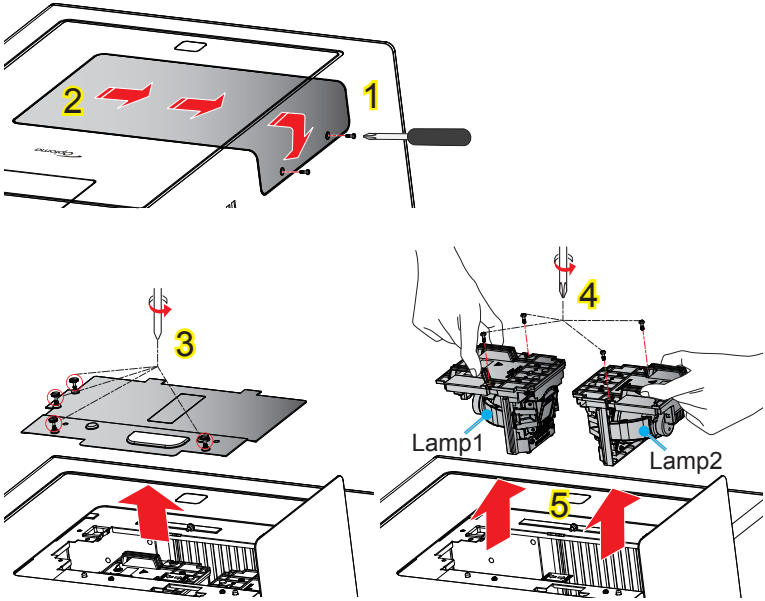

Lamp Replacement Procedure:

1. Switch off the power to the projector by pressing the "⏻" button.
2. Allow the projector to cool down for at least 30 minutes.
3. Disconnect the power cord.
4. Unscrew the two screws on the lamp door. 1
5. Slide the lamp door sideways, then hook it round the bottom of the projector. 2
6. Unscrew the four screws on the lamp cover. 3
7. Unscrew the two screws on the lamp housing. 4
8. Lift up the lamp handle and remove the lamp module slowly and carefully. 5

To replace the lamp module, reverse the previous steps.

9. Turn on the projector and use "Lamp Reset" after the lamp module is replaced.

Lamp Reset: (i) Press "Menu" → (ii) Select "OPTION" → (iii) Select "Lamp Settings" → (iv) Select "Lamp 1 Reset" or "Lamp 2 Reset" → (v) Select "Yes".

Compatibility Modes

Computer Compatibility (PC/Mac)

Mode	Resolution	V-Sync (Hz)			
		PC (Analog)	PC (Digital)	Mac (Analog)	Mac (Digital)
VGA	640 × 480	60	60	60	60
VGA	640 × 480	67	-	-	-
VGA	640 × 480	72	-	72	72
VGA	640 × 480	85	-	85	85
SVGA	800 × 600	56	-	-	-
SVGA	800 × 600	60	60	60	60
SVGA	800 × 600	72	72	72	72
SVGA	800 × 600	85	85	85	85
XGA	1024 × 768	60	60	60	60
XGA	1024 × 768	70	70	70	70
XGA	1024 × 768	75	75	75	75
XGA	1024 × 768	85	85	85	85
WXGA	1280 × 768	60	60	60	-
WXGA	1280 × 768	75	75	75	75
WXGA	1280 × 768	85	85	85	-
WXGA	1280 × 800	60	60	60	60
SXGA	1280 × 1024	60	60	60	60
SXGA	1280 × 1024	75	75	75	75
SXGA	1280 × 1024	85	85	-	-
WXGA (#1)	1366 × 768	60	60	-	-
SXGA+	1400 × 1050	60	60	-	-
UXGA	1600 × 1200	60	60	-	-
WUXGA (#2)	1920 × 1200	48 (#3)	48 (#3)	-	-
WUXGA (#2)	1920 × 1200	50 (#3)	50 (#3)	-	-
WUXGA (#2)	1920 × 1200	60	60	60	60
HD	1920 × 1080	24	24		
HD	1920 × 1080	50	50		
HD	1920 × 1080	60	60		

NOTE

- For widescreen resolution (WXGA), the compatibility support is dependent on Notebook/PC models.
- Please note that using resolutions other than native 1920 x 1200 (WUXGA model) may result in some loss of image clarity.
- (#1) Windows 8 Standard timing.
- (#2) Only support RB (reduced blanking).
- (#3) must support native resolution.

Mode	Resolution	V-Sync (Hz)			
		Analog	Digital	Mac (Analog)	Mac (Digital)
HDTV(1080i)	1920 × 1080	-	50	-	-
HDTV(1080i)	1920 × 1080	-	60	-	-
HDTV(1080p)	1920 × 1080	24	24	-	-
HDTV(1080p)	1920 × 1080	-	30	-	-
HDTV(1080p)	1920 × 1080	50	50	-	-
HDTV(1080p)	1920 × 1080	60	50	60	60
HDTV(720p)	1280 × 720	50	50	-	-
HDTV(720p)	1280 × 720	60	60	60	60
SDTV(480i)	720 × 576	-	50	-	-
SDTV(480p)	720 × 576	-	50	-	-
SDTV(576i)	720 × 480	-	60	-	-
SDTV(576p)	720 × 480	-	60	-	-

NOTE

- Input 1920x1080, the black bar (120 pixel height) will be on image bottom side.

Video Compatibility

NTSC	M (3.58MHz), 4.43 MHz
PAL	B, D, G, H, I, M, N
SECAM	B, D, G, K, K1, L
SDTV	480i/p@60Hz, 576i/p@50Hz
HDTV	720p@50Hz/60Hz, 1080i@50Hz/60Hz, 1080p@24Hz/50Hz/60Hz

RS232 Commands and Protocol Function List

RS232 Pin Assignments

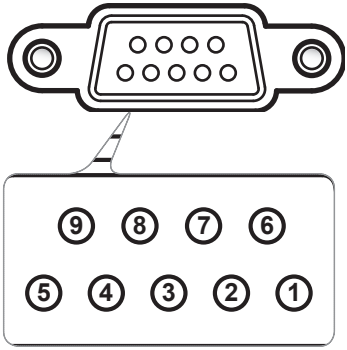

Pin no.	Spec.
1	N/A
2	RXD
3	TXD
4	N/A
5	GND
6	N/A
7	N/A
8	N/A
9	N/A

NOTE

- RS232 shell is grounded.

RS232 Protocol Function List

1. There is a <CR> after all ASCII commands.
2. 0D is the HEX code for <CR> in ASCII code.

Baud Rate : 9600
Data Bits: 8
Parity: None
Stop Bits: 1
Flow Control : None
UART16550 FIFO: Disable
Projector Return (Pass): P
Projector Return (Fail): F

XX=00-99, projector's ID,
XX=00 is for all projectors

SEND to projector

232 ASCII Code	HEX Code	Function		Description
~XX00 1	7E 30 30 30 30 20 31 0D	Power ON		
~XX00 0	7E 30 30 30 30 20 30 0D	Power OFF		
~XX00 1 ~nnnn	7E 30 30 30 30 20 31 20 a 0D	Power ON with Password		~nnnn = ~0000 (a=7E 30 30 30 30) - ~9999(a=7E 39 39 39 39)
~XX01 1	7E 30 30 30 31 20 31 0D	Resync		
~XX04 1	7E 30 30 30 34 20 31 0D	Freeze		
~XX04 0	7E 30 30 30 34 20 30 0D	Unfreeze		
~XX307 1	7E 30 30 33 30 37 20 31 0D	Zoom Plus		
~XX307 2	7E 30 30 33 30 37 20 32 0D	Zoom Minus		
~XX308 1	7E 30 30 33 30 38 20 31 0D	Focus Plus		
~XX308 2	7E 30 30 33 30 38 20 32 0D	Focus Minus		
~XX07 1	7E 30 30 30 37 20 31 0D	Up (Image shift under zoom)		
~XX08 1	7E 30 30 30 38 20 31 0D	Down (Image shift under zoom)		
~XX09 1	7E 30 30 30 39 20 31 0D	Left (Image shift under zoom)		
~XX10 1	7E 30 30 31 30 20 31 0D	Right (Image shift under zoom)		
~XX11 1	7E 30 30 31 31 20 31 0D	IR function	On	
~XX11 0	7E 30 30 31 31 20 30 0D		Off	
~XX11 2	7E 30 30 31 31 20 32 0D		Front	
~XX11 3	7E 30 30 31 31 20 33 0D		Top	
~XX12 1	7E 30 30 31 32 20 31 0D	Direct Source Command	HDMI 1	
~XX12 4	7E 30 30 31 32 20 34 0D		BNC	
~XX12 5	7E 30 30 31 32 20 35 0D		VGA 1	
~XX12 6	7E 30 30 31 32 20 36 0D		VGA 2	
~XX12 9	7E 30 30 31 32 20 39 0D		S-Video	
~XX12 10	7E 30 30 31 32 20 31 30 0D		Video	
~XX12 14	7E 30 30 31 32 20 31 34 0D		Component RCA	
~XX12 15	7E 30 30 31 32 20 31 35 0D		HDMI 2	
~XX20 1	7E 30 30 32 30 20 31 0D	Display Mode	Presentation	
~XX20 2	7E 30 30 32 30 20 32 0D		Bright	
~XX20 3	7E 30 30 32 30 20 33 0D		Movie	
~XX20 4	7E 30 30 32 30 20 34 0D		sRGB	
~XX20 7	7E 30 30 32 30 20 37 0D		Blackboard	
~XX20 13	7E 30 30 32 30 20 31 33 0D		DICOM SIM.	
~XX348 1	7E 30 30 33 34 38 20 31 0D	Display Mode Lock	On	
~XX348 0	7E 30 30 33 34 38 20 30 0D	Display Mode Lock	Off	
~XX21 n	7E 30 30 32 31 20 a 0D	Brightness		n = -50 (a=2D 35 30) ~ 50 (a=35 30)
~XX22 n	7E 30 30 32 32 20 a 0D	Contrast		n = -50 (a=2D 35 30) ~ 50 (a=35 30)
~XX23 n	7E 30 30 32 33 20 a 0D	Sharpness		n = 1 (a=31) ~ 15 (a=31 35)
~XX24 n	7E 30 30 32 34 20 a 0D	RGB Gain/Bias	Red Gain	n = -50 ~ 50
~XX25 n	7E 30 30 32 35 20 a 0D		Green Gain	n = -50 ~ 50
~XX26 n	7E 30 30 32 36 20 a 0D		Blue Gain	n = -50 ~ 50
~XX27 n	7E 30 30 32 37 20 a 0D		Red Bias	n = -50 ~ 50
~XX28 n	7E 30 30 32 38 20 a 0D		Green Bias	n = -50 ~ 50
~XX29 n	7E 30 30 32 39 20 a 0D		Blue Bias	n = -50 ~ 50
~XX327 n	7E 30 30 33 32 37 20 a 0D	Color Matching	Red Hue	n = -127 ~ 127
~XX328 n	7E 30 30 33 32 38 20 a 0D		Green Hue	n = -127 ~ 127
~XX329 n	7E 30 30 33 32 39 20 a 0D		Blue Hue	n = -127 ~ 127
~XX330 n	7E 30 30 33 33 30 20 a 0D		Cyan Hue	n = -127 ~ 127
~XX331 n	7E 30 30 33 33 31 20 a 0D		Magenta Hue	n = -127 ~ 127
~XX332 n	7E 30 30 33 33 32 20 a 0D		Yellow Hue	n = -127 ~ 127
~XX333 n	7E 30 30 33 33 33 20 a 0D		Red Saturation	n = -127 ~ 127
~XX334 n	7E 30 30 33 33 34 20 a 0D		Green Saturation	n = -127 ~ 127
~XX335n	7E 30 30 33 33 35 20 a 0D		Blue Saturation	n = -127 ~ 127
~XX336 n	7E 30 30 33 33 36 20 a 0D		Cyan Saturation	n = -127 ~ 127
~XX337 n	7E 30 30 33 33 37 20 a 0D		Magenta Saturation	n = -127 ~ 127
~XX338 n	7E 30 30 33 33 38 20 a 0D		Yellow Saturation	n = -127 ~ 127
~XX339 n	7E 30 30 33 33 39 20 a 0D		Red Gain	n = -127 ~ 127
~XX340 n	7E 30 30 33 34 30 20 a 0D		Green Gain	n = -127 ~ 127
~XX341 n	7E 30 30 33 34 31 20 a 0D		Blue Gain	n = -127 ~ 127
~XX342 n	7E 30 30 33 34 32 20 a 0D		Cyan Gain	n = -127 ~ 127
~XX343 n	7E 30 30 33 34 33 20 a 0D		Magenta Gain	n = -127 ~ 127

~XX344 n	7E 30 30 33 34 34 20 a 0D		Yellow Gain	n = -127 ~ 127
~XX345n	7E 30 30 33 34 35 20 a 0D		R	n = -50 ~ 50
~XX346 n	7E 30 30 33 34 36 20 a 0D		G	n = -50 ~ 50
~XX347 n	7E 30 30 33 34 37 20 a 0D		B	n = -50 ~ 50
~XX34 n	7E 30 30 33 34 20 a 0D	BrilliantColor™		n = 0 (a=30) ~ 10 (a=31 30)
~XX35 1	7E 30 30 33 35 20 31 0D	Gamma	Film	
~XX35 3	7E 30 30 33 35 20 33 0D		Graphics	
~XX35 5	7E 30 30 33 35 20 35 0D		1.8	
~XX35 6	7E 30 30 33 35 20 36 0D		2.0	
~XX35 7	7E 30 30 33 35 20 37 0D		2.2	
~XX35 8	7E 30 30 33 35 20 38 0D		2.6	
~XX36 1	7E 30 30 33 36 20 31 0D	Color Temp.	Warm	
~XX36 2	7E 30 30 33 36 20 32 0D		Medium	
~XX36 3	7E 30 30 33 36 20 33 0D		Cold	
~XX37 1	7E 30 30 33 37 20 31 0D	Color Space	Auto	* HDMI w/o Color Space item
~XX37 2	7E 30 30 33 37 20 32 0D		RGB\ RGB (0-255)*	* RGB (0-255) supports when HDMI is detected
~XX37 3	7E 30 30 33 37 20 33 0D		YUV	
~XX37 4	7E 30 30 33 37 20 34 0D		RGB(16 – 235)*	supports when HDMI is detected
~XX39 n	7E 30 30 33 39 20 a 0D	Input Source		n=1//4/5/6/7/8/9/10 (HDMI1/ BNC/VGA1/VGA2/HDMI2/Component/ S-video/video)
~XX44 n	7E 30 30 34 34 20 a 0D	Tint		n = -50 (a=2D 35 30) ~ 50 (a=35 30)
~XX45 n	7E 30 30 34 35 20 a 0D	Color (Saturation)		n = -50 (a=2D 30 30) ~ 50 (a=35 30)
~XX60 1	7E 30 30 36 30 20 31 0D	Format	4:3	
~XX60 2	7E 30 30 36 30 20 32 0D		16:9	
~XX60 3	7E 30 30 36 30 20 33 0D		16:10	
~XX60 5	7E 30 30 36 30 20 35 0D		LBX	
~XX60 6	7E 30 30 36 30 20 36 0D		Native	
~XX60 7	7E 30 30 36 30 20 37 0D		AUTO	
~XX61 n	7E 30 30 36 31 20 a 0D	Edge masking		n = 0 (a=30) ~ 5(a=35)
~XX62 n	7E 30 30 36 32 20 a 0D	Digital Zoom		n = -20 (a=2D 32 30) ~ 50 (a=35 30)
~XX63 n	7E 30 30 36 33 20 a 0D	H Image Shift		n = -100 ~ +100
~XX64 n	7E 30 30 36 34 20 a 0D	V Image Shift		n = -100 ~ +100
~XX65 n	7E 30 30 36 35 20 a 0D	H Keystone		n = -20 (a=2D 32 30) ~ 20 (a=32 30)
~XX66 n	7E 30 30 36 36 20 a 0D	V Keystone		n = -20 (a=2D 32 30) ~ 20 (a=32 30)
~XX69 1	7E 30 30 36 39 20 31 0D	Auto Keystone	On	
~XX69 0	7E 30 30 36 39 20 30 0D	Auto Keystone	Off	
~XX70 1	7E 30 30 37 30 20 31 0D	Language	English	
~XX70 2	7E 30 30 37 30 20 32 0D		German	
~XX70 3	7E 30 30 37 30 20 33 0D		French	
~XX70 4	7E 30 30 37 30 20 34 0D		Italian	
~XX70 5	7E 30 30 37 30 20 35 0D		Spanish	
~XX70 6	7E 30 30 37 30 20 36 0D		Portuguese	
~XX70 7	7E 30 30 37 30 20 37 0D		Polish	
~XX70 8	7E 30 30 37 30 20 38 0D		Dutch	
~XX70 9	7E 30 30 37 30 20 39 0D		Swedish	
~XX70 10	7E 30 30 37 30 20 31 30 0D		Norwegian/Danish	
~XX70 11	7E 30 30 37 30 20 31 31 0D		Finnish	
~XX70 12	7E 30 30 37 30 20 31 32 0D		Greek	
~XX70 13	7E 30 30 37 30 20 31 33 0D		Traditional Chinese	
~XX70 14	7E 30 30 37 30 20 31 34 0D		Simplified Chinese	
~XX70 16	7E 30 30 37 30 20 31 36 0D		Korean	
~XX70 17	7E 30 30 37 30 20 31 37 0D		Russian	
~XX70 18	7E 30 30 37 30 20 31 38 0D		Hungarian	
~XX70 19	7E 30 30 37 30 20 31 39 0D		Czechoslovak	
~XX70 20	7E 30 30 37 30 20 32 30 0D		Arabic	
~XX70 21	7E 30 30 37 30 20 32 31 0D		Thai	
~XX70 22	7E 30 30 37 30 20 32 32 0D		Turkish	
~XX70 23	7E 30 30 37 30 20 32 33 0D		Farsi	
~XX70 25	7E 30 30 37 30 20 32 35 0D		Vietnamese	
~XX71 1	7E 30 30 37 31 20 31 0D	Projection	Front-Desktop	
~XX71 2	7E 30 30 37 31 20 32 0D		Rear-Desktop	
~XX71 3	7E 30 30 37 31 20 33 0D		Front-Ceiling	
~XX71 4	7E 30 30 37 31 20 34 0D		Rear-Ceiling	
~XX72 1	7E 30 30 37 32 20 31 0D	Menu Location	Top Left	
~XX72 2	7E 30 30 37 32 20 32 0D		Top Right	
~XX72 3	7E 30 30 37 32 20 33 0D		Centre	
~XX72 4	7E 30 30 37 32 20 34 0D		Bottom Left	
~XX72 5	7E 30 30 37 32 20 35 0D		Bottom Right	
~XX90 1	7E 30 30 39 30 20 31 0D	Screen Type	16:10	
~XX90 0	7E 30 30 39 30 20 30 0D		16:9	
~XX91 1	7E 30 30 39 31 20 31 0D	Signal	Automatic	On
~XX91 0	7E 30 30 39 31 20 30 0D		Automatic	Off
~XX73 n	7E 30 30 37 33 20 a 0D		Frequency	n = -5 (a=2D 35) ~ 5 (a=35) By signal
~XX74 n	7E 30 30 37 34 20 a 0D		Phase	n = 0 (a=30) ~ 63 (a=36 33) By signal
~XX75 n	7E 30 30 37 35 20 a 0D		H. Position	n = -5 (a=2D 35) ~ 5 (a=35) By timing
~XX76 n	7E 30 30 37 36 20 a 0D		V. Position	n = -5 (a=2D 35) ~ 5 (a=35) By timing
~XX200 n	7E 30 30 32 30 30 20 n 0D		White Level	n = 0 (a=30) ~ 31 (a=33 31) By signal
~XX201 n	7E 30 30 32 30 31 20 n 0D		Black Level	n = -5 (a=2D 35) ~ 5 (a=35) By signal
~XX202	7E 30 30 32 30 32 20 n 0D		Saturation	n = -5 (a=2D 35) ~ 5 (a=35) By signal
~XX203 n	7E 30 30 32 30 33 20 n 0D		Hue	n = -5 (a=2D 35) ~ 5 (a=35) By signal
~XX204 n	7E 30 30 32 30 34 20 n 0D		IRE	n=1/0 (0/7.5)

~XX77 n	7E 30 30 37 37 20 aabbcc 0D	Security	Security Timer	Month/Day/Hour n = mm/dd/hh mm = 00 (aa=30 30) ~ 12 (aa=31 32) dd = 00 (bb=30 30) ~ 30 (bb=33 30) hh = 00 (cc=30 30) ~ 24 (cc=32 34)
~XX78 1	7E 30 30 37 38 20 31 0D		Security	On
~XX78 0	7E 30 30 37 38 20 30 0D			Off (0/2 for backward compatible)
~XX79 n	7E 30 30 37 39 20 a 0D	Projector ID		n = 00 (a=30 30) ~ 99 (a=39 39)
~XX82 1	7E 30 30 38 32 20 31 0D	Logo	Optoma	
~XX82 2	7E 30 30 38 32 20 32 0D		Neutral	
~XX82 3	7E 30 30 38 32 20 32 0D		User	
~XX83 1	7E 30 30 38 33 20 31 0D	Logo Capture		
~XX349 n	7E 30 30 33 34 39 20 a 0D	Lens Function		n=1/2(Lock/Unlock)
~XX84 n	7E 30 30 38 34 20 a 0D	Lens Shift		n=3/4/5/6(Up/Down/Left/Right)
~XX88 0	7E 30 30 38 38 20 30 0D	Closed Captioning	Off	
~XX88 1	7E 30 30 38 38 20 31 0D		cc1	
~XX88 2	7E 30 30 38 38 20 32 0D		cc2	
~XX92 n	7E 30 30 39 32 20 a 0D	Lamp mode		n=1/2/3/4 (Dual/Relay/Lamp1/Lamp2)
~XX100 1	7E 30 30 31 30 30 20 31 0D	Source Lock	On	
~XX100 0	7E 30 30 31 30 30 20 30 0D		Off	
~XX101 1	7E 30 30 31 30 31 20 31 0D	High Altitude	On	
~XX101 0	7E 30 30 31 30 31 20 30 0D		Off	
~XX102 1	7E 30 30 31 30 32 20 31 0D	Information Hide	On	
~XX102 0	7E 30 30 31 30 32 20 30 0D		Off	
~XX103 1	7E 30 30 31 30 33 20 31 0D	Keypad Lock	On	
~XX103 0	7E 30 30 31 30 33 20 30 0D		Off	
~XX192 0	7E 30 30 31 39 32 20 30 0D	12V Trigger	Off	
~XX192 1	7E 30 30 31 39 32 20 31 0D		On	
~XX195 0	7E 30 30 31 39 35 20 30 0D	Test Pattern	None	
~XX195 1	7E 30 30 31 39 35 20 31 0D		Grid(White)	
~XX195 2	7E 30 30 31 39 35 20 32 0D		White	
~XX195 3	7E 30 30 31 39 35 20 33 0D		Grid(Green)	
~XX195 4	7E 30 30 31 39 35 20 34 0D		Gird(Magenta)	
~XX104 1	7E 30 30 31 30 34 20 31 0D	Background Color	Blue	
~XX104 2	7E 30 30 31 30 34 20 32 0D		Black	
~XX104 3	7E 30 30 31 30 34 20 33 0D		Red	
~XX104 4	7E 30 30 31 30 34 20 34 0D		Green	
~XX104 5	7E 30 30 31 30 34 20 35 0D		White	
~XX105 1	7E 30 30 31 30 35 20 31 0D	Advanced	Direct Power On	On
~XX105 0	7E 30 30 31 30 35 20 30 0D			Off
~XX106 n	7E 30 30 31 30 36 20 a 0D		Auto Power Off (min)	n = 0 (a=30) ~ 180 (a=31 38 30), step=1
~XX107 n	7E 30 30 31 30 37 20 a 0D		Sleep Timer (min)	n = 000 (a=30 30 30) ~ 995 (a=39 39 35), step=5
~XX108 n	7E 30 30 31 30 38 20 a 0D		Lamp Hour	n=1/2 (Lamp1 hour / Lamp2 hour)
~XX113 1	7E 30 30 31 31 33 20 31 0D		Signal Power on	on
~XX113 0	7E 30 30 31 31 33 20 30 0D		Signal Power on	off
~XX114 1	7E 30 30 31 31 34 20 31 0D		Power Mode(Standby)	Active
~XX114 0	7E 30 30 31 31 34 20 30 0D			Eco (<=1W)
~XX109 1	7E 30 30 31 30 39 20 31 0D		Lamp Reminder	On
~XX109 0	7E 30 30 31 30 39 20 30 0D			Off
~XX110 1	7E 30 30 31 31 30 20 31 0D		Brightness Mode	Bright
~XX110 2	7E 30 30 31 31 30 20 32 0D			STD
~XX110 3	7E 30 30 31 31 30 20 33 0D			Power
~XX326 n	7E 30 30 33 32 36 20 a 0D		Power =350w	n=0
~XX326 n	7E 30 30 33 32 36 20 a 0D		Power =340w	n=1
~XX326 n	7E 30 30 33 32 36 20 a 0D		Power =330w	n=2
~XX326 n	7E 30 30 33 32 36 20 a 0D		Power =320w	n=3
~XX326 n	7E 30 30 33 32 36 20 a 0D		Power =310w	n=4
~XX326 n	7E 30 30 33 32 36 20 a 0D		Power =300w	n=5
~XX326 n	7E 30 30 33 32 36 20 a 0D		Power =290w	n=6
~XX326 n	7E 30 30 33 32 36 20 a 0D		Power =280w	n=7
~XX111 1	7E 30 30 31 31 31 20 31 0D		Lamp1 Reset	Yes
~XX111 2	7E 30 30 31 31 31 20 32 0D			No
~XX116 1	7E 30 30 31 31 36 20 31 0D		Lamp2 Reset	Yes
~XX116 2	7E 30 30 31 31 36 20 32 0D			No
~XX112 1	7E 30 30 31 31 32 20 31 0D	Reset		Yes
~XX112 2	7E 30 30 31 31 32 20 32 0D			No
~XX191 1	7E 30 30 31 39 31 20 31 0D		Dynamic Black	On
~XX191 0	7E 30 30 31 39 31 20 30 0D			Off
~XX300 n	7E 30 30 33 30 30 20 n 0D		H ARC	n=-10 - +10
~XX301 n	7E 30 30 33 30 31 20 n 0D		V ARC	n=-10 - +10
~XX302 n	7E 30 30 33 30 32 20 n 0D	PIP	Screen	n=0/1/2 (Off/PIP/SBS)
~XX303 n	7E 30 30 33 30 33 20 n 0D		PIP location	n= 1/2/3/4 (Top left/ Top right / Bottom left / Bottom right)
~XX304 n	7E 30 30 33 30 34 20 n 0D		PIP size	n=1/2/3 (1/16/ 1/25 / 1/36)
~XX305 n	7E 30 30 33 30 35 20 n 0D		PIP source	n=1/2/14/15/6/4/9/10 (HDMI1/VGA1/ Component/ HDMI2/ VGA2/ BNC/ S-video/video)
~XX306	7E 30 30 33 30 36 20 0D		SWAP	
~XX307 n	7E 30 30 33 30 37 20 n 0D	Lens function	Zoom	n=1/2 (Zoom+/Zoom -)
~XX308 n	7E 30 30 33 30 38 20 n 0D		Focus	n=1/2 (Focus+ / Focus-)
~XX325 1	7E 30 30 33 32 35 20 31 0D	Shutter		On
~XX325 0	7E 30 30 33 32 35 20 30 0D			Off

SEND from projector automatically

232 ASCII Code	HEX Code	Function	Projector Return	Description
		System status	INFOn	n : 0/1/2/3/4/6/7/8 = Standby/Warming/Cooling/Out of Range/ Lamp fail/ Fan Lock/Over Temperature/ Lamp Hours Running Out

READ from projector

232 ASCII Code	HEX Code	Function	Projector Return	Description
~XX121 1	7E 30 30 31 32 31 20 31 0D	Input Source	OKa	a : 0/2/3/4/5 /6/7/8/11= None /VGA1/VGA2/S-Video/Video/BNC/ HDMI1/ HDMI2/Component
~XX122 1	7E 30 30 31 32 32 20 31 0D	Sofware Version	OKdddd	dddd: FW version
~XX123 1	7E 30 30 31 32 33 20 31 0D	Display Mode	OKa	a : 0/1/2/3/4/7/12 = None /Presentation/Bright/Movie/sRGB/ /Blackboard/ DICOM SIM.
~XX124 1	7E 30 30 31 32 34 20 31 0D	Power State	OKa	a : 0/1 = Off/On
~XX125 1	7E 30 30 31 32 35 20 31 0D	Brightness	OKa	
~XX126 1	7E 30 30 31 32 36 20 31 0D	Contrast	OKa	
~XX127 1	7E 30 30 31 32 37 20 31 0D	Aspect Ratio	OKa	a: 0/1/2/4/5/6 = 4:3/16:9/16:10/LBX/Native/Auto depend on Screen Type setting
~XX128 1	7E 30 30 31 32 38 20 31 0D	Color Temperature	OKa	a : 0/1/2 = Warm/Medium/Cold
~XX129 1	7E 30 30 31 32 39 20 31 0D	Projection Mode	OKa	a : 0/1/2/3 = Front-Desktop/Rear-Desktop/Front-Ceiling/Rear-Ceiling
~XX150 1	7E 30 30 31 35 30 20 31 0D	Information	OKabbbbccddddee	a : 0/1 = Off/On bbbb: Lamp Hour cc: source 00/02/03/04/05/06/07/08/09= None/VGA1/VGA2/ S-Video/Video/ BNC /HDMI1/HDMI2/Component dddd: FW version ee : Display mode 0/1/2/3/4/7/10 None/Presentation/Bright/Movie/sRGB /Blackboard/DICOM SIM.
~XX151 1	7E 30 30 31 35 31 20 31 0D	Model name	OKa	a: 11=EH7700

Telnet Commands

- Port: support 3 ports of 23/1023/2023
- Multi-connections: Projector could receive commands from different ports at the same time
- Command Format: Follow RS232 command format (support both of ASCII and HEX)
- Command Response: Follow RS232 return message.

Lead Code	Projector ID		Command ID			space	variable	carriage return
~	X	X	X	X	X		n	CR
Fix code One Digit~	00		Defined by Optoma 2 or 3 Digit. See the Follow content			One Digit	Per item Definition	Fix code One Digit

NOTE

- When the data length is greater or shorter than indicated by the data length code, the projector returns the error code to computer.

AMX Device Discovery commands

- UDP : 239.255.250.250
- Port No. : 9131
- Each UDP broadcast information as below are updated around 40 seconds

Command	Description	Remark (Parameter)
Device-UUID	MAC address (Hex value without' ':' separator)	12 digits
Device-SKD-Class	The Duet DeviceSdk class name	VideoProjector
Device-Make	Maker name	MakerPXLW
Device-Model	Model name	Projector
Config-URL	Device's IP address LAN IP address is shown up if LAN IP address is valid. Wireless LAN IP address is shown up if Wireless LAN IP address is valid.	http://xxx.xxx.xxx.xxx/index.html
Revision	The revision must follow a major.minor.micro scheme. The revision is only increased if the command protocol is modified.	1.0.0

- This AMX function is only to support AMX Device Discovery.
- The broadcast information only send out through valid interface.
- Both LAN and Wireless LAN interfaces could be supported at the same time.
- If “Beacon Validator” was used. Please take care below information

PJLink™ supported commands

The table below shows commands to control the projector using the PJLink™ protocol.

Command Description Remark (Parameter)

Command	Description	Remark (Parameter)
POWR	Power control	0 = Standby
		1 = Power on
POWR?	Inquiry about the power state	0 = Standby
		1 = Power on
		2 = Cooling down
		3 = Warming up
INPT	INPT Input switching	11 = VGA1
INPT?	Inquiry about input switching	12 = VGA2
		13 = Component
		14 = BNC
		21 = VIDEO
		22 = S-VIDEO
		31 = HDMI 1
		32 = HDMI 2
AVMT	Mute control	30 = Video and audio mute disable
AVMT?	Inquiry about the mute state	31 = Video and audio mute enable
ERST?	Inquiry about the error state	1st byte: Fan error, 0 or 2
		2nd byte: Lamp error, 0 to 2
		3rd byte: Temperature error, 0 or 2
		4th byte: Cover open error, 0 or 2
		5th byte: Filter error, 0 or 2

Command	Description	Remark (Parameter)
ERST?	Inquiry about the error state	6th byte: Other error, 0 or 2
		0 to 2 mean as follows: 0 = No error detected, 1 = Warning, 2 = Error
LAMP?	Inquiry about the lamp state	1st value (1 to 5 digits): Cumulative LAMP operating time (This item shows a lamp operating time (hour) calculated based on that LAMP MODE is LOW.)
		2nd value: 0 = Lamp off, 1 = Lamp on
INST?	Inquiry about the available inputs	The following value is returned. “11 12 21 22 31 32”
NAME?	Inquiry about the projector name	The projector name set on the NETWORK menu or the ProjectorView Setup window is returned
INF1?	Inquiry about the manufacturer name	“Optoma” is returned.
INF2?	Inquiry about the model name	“EH7700” is returned.
INF0?	Inquiry about other information	No other information is available. No parameter is returned.
CLSS?	Inquiry about the class information	“1” is returned.

NOTE

- This projector is fully compliant to the specifications of JBMIA PJLink™ Class 1. It supports all the commands defined by PJLink™ Class 1, and the compliance has been verified with the PJLink™ standard specifications Version 1.0.

Trademarks

- DLP is trademarks of Texas Instruments.
- IBM is a trademark or registered trademark of International Business Machines Corporation.
- Macintosh, Mac OS X, iMac, and PowerBook are trademarks of Apple Inc., registered in the U.S. and other countries.
- Microsoft, Windows, Windows Vista, Internet Explorer and PowerPoint are either a registered trademark or trademark of Microsoft Corporation in the United States and/or other countries.
- HDMI, the HDMI Logo and High-Definition Multimedia Interface are trademarks or registered trademarks of HDMI Licensing LLC.
- AMX Device Discovery
  The projector is monitored and controlled by the control system of AMX.
- Crestron RoomView Connected™
  The projector is monitored and controlled by the control system and software of Crestron Electronics, Inc.
- PJLink™
  PJLink trademark is a trademark applied for registration or is already registered in Japan, the United States of America and other countries and areas.
  This projector supports standard protocol PJLink™ for projector control and you can control and monitor projector's operations using the same application among projectors of different models and different manufacturers.
- Other product and company names mentioned in this user's manual may be the trademarks or registered trademarks of their respective holders.
- About Crestron RoomView Connected™
  Electronics, Inc. to facilitate configuration of the control system of Crestron and its target devices.

  To use this technology, it is necessary to set CONTROL SYSTEM in the NETWORK menu. (See pages 48.)

  For details, see the website of Crestron Electronics, Inc.

  URL http://www.crestron.com

  URL http://www.crestron.com/getroomview/

- About AMX Device Discovery facilitate configuration of the control system of AMX and its target devices.

  To use this technology, it is necessary to set CONTROL SYSTEM in the NETWORK menu. (See pages 48.)

  For details, see the website of AMX.

  URL http://www.amx.com/
- About PJLink™

  To use PJLink™ Function, the PJLink™application software is required.

  To use this function, set the network certification properly according to the setting of the network application to be used. (See page 48.)

  For the specifications of JBMIA PJLink™ access to the Web site of Japan Business Machine and Information System Industries Association (JBMIA). (http://pjlink.jbmia.or.jp/english)
- This projector is full to complaint to the specifications of JBMIA PJLink™ Class 1. It supports all the commands defined by PJLink™ Class 1, and the compliance has been verified with the PJLink™ standard specifications Version 1.0.
- Important:

  For the commutation for PJLink™, see the table on the next page.

  The control may not be performed correctly or the monitoring data may not be obtained correctly in the following conditions:
  - During standby
  - During zoom/focus adjustment
  - During lens shift adjustment
  - During input source switching
  - During auto position execution
  - During Shutter
  - During command processing
  - Before the splash screen disappears after the power is turned on.
  - During zoom/focus adjustment, lens shift adjustment, Shutter , etc., it may take approx. 5seconds to receive a response to a command.

- Use 1 controller to control/monitor 1 projector.
- For how to control/monitor using PJLink™, see the operation manual of the PJLink™ application you use.
- When you monitor the projector's operating status using this function by issuing inquiry commands
- successively, issue an inquiry command after receiving the response to the previous inquiry command from the projector.

Ceiling Mount Installation

Note

- Please note that damage resulting from incorrect installation will void the warranty.

1. To prevent damage to your projector, please use the Optoma ceiling mount.
2. If you wish to use a third party ceiling mount kit, please ensure the screws used to attach a mount to the projector meet the following specifications:
   - Screw type: M8*4
   - Recommended screw length: 10mm

- Eye Bolt is Security Chain Hook, This is not a handle for carrying the projector.
- Do not carry the projector with this hook.(Using ceiling mount hole)

Security eye bolt

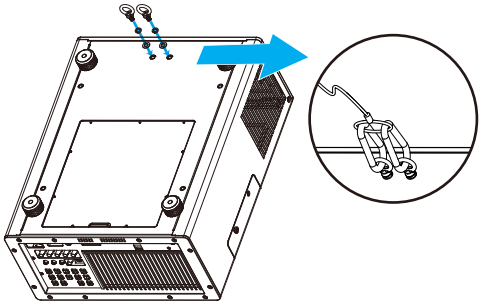

Unit: mm

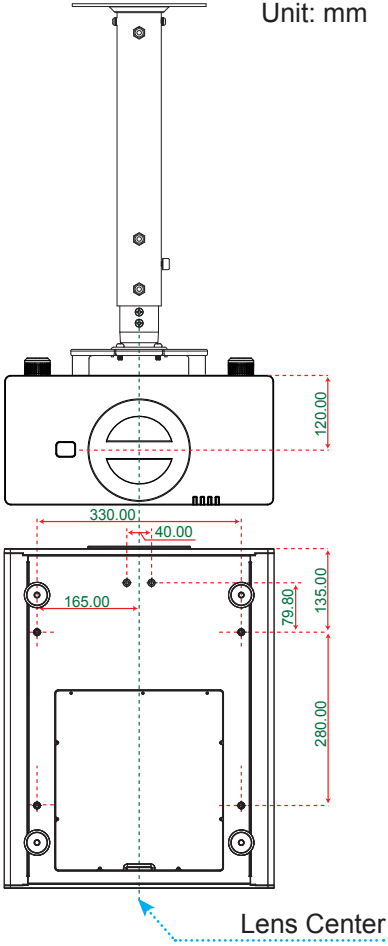

Note

Warning:

1. If you buy a ceiling mount from another company, please be sure to use the correct screw size. Screw size will vary depending on the thickness of the mounting plate.
2. Be sure to keep at least 10 cm gap between the ceiling and the bottom of the projector.
3. Avoid installing the projector near a heat source.

Ceiling Mount Safeguards

1. Stocktaking of projector accessories
   - M8 eye bolt screw*2

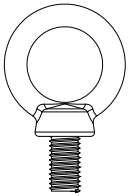

   - Spring washer*2

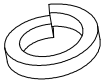

   - Flat washer*2

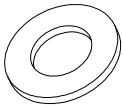

2. Bring your own installer
   - Hook : It is recommended to prepare 4 stainless steel hooks with a diameter of 10 mm or larger.

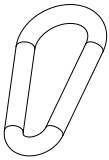

   - Steel wire: It is recommended to prepare a steel wire with a length of less than 120 cm and a diameter of 4 mm or larger.

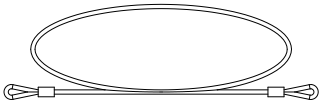

3. Installation procedures
   - Lock the M8 eye bolt screw, spring washer, flat washer to the projector in order of the shown.

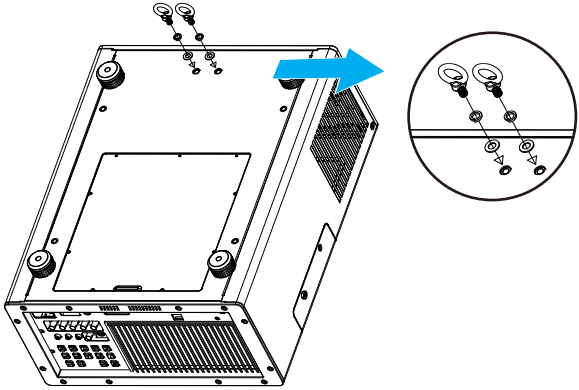

   - Pass through the rope at each end of 2 hooks.
   - Buckle the 2 hooks on the one end to the eye bolt screw and the 2 hooks on the other end to the stable bracket to finish the installation.

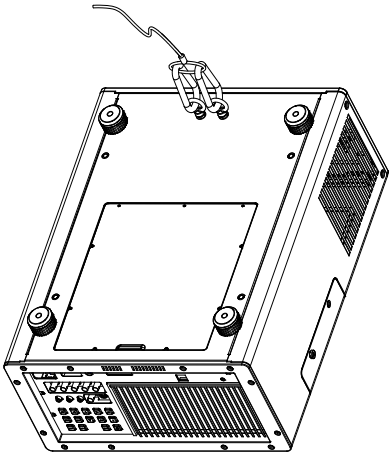

Optoma Global Offices

For service or support please contact your local office.

USA

3178 Laurelview Ct.
Fremont, CA 94538, USA
www.optomausa.com

888-289-6786
510-897-8601
services@optoma.com

Canada

2420 Meadowpine Blvd., Suite #105
Mississauga, ON, L5N 6S2, Canada
www.optoma.ca

888-289-6786
510-897-8601
services@optoma.com

Europe

42 Caxton Way, The Watford Business Park
Watford, Hertfordshire,
WD18 8QZ, UK
www.optoma.eu
Service Tel : +44 (0)1923 691865

+44 (0) 1923 691 800
+44 (0) 1923 691 888
service@tsc-europe.com

France

Bâtiment E
81-83 avenue Edouard Vaillant
92100 Boulogne Billancourt, France

+33 1 41 46 12 20
+33 1 41 46 94 35
savoptoma@optoma.fr

Spain

C/ José Hierro,36 Of. 1C
28522 Rivas VaciaMadrid,
Spain

+34 91 499 06 06
+34 91 670 08 32

Deutschland

Werftstrasse 25
D40549 Düsseldorf,
Germany

+49 (0) 211 506 6670
+49 (0) 211 506 66799
info@optoma.de

Scandinavia

Lerpeveien 25
3040 Drammen
Norway

+47 32 98 89 90
+47 32 98 89 99
info@optoma.no

PO.BOX 9515
3038 Drammen
Norway

Latin America

3178 Laurelview Ct.
Fremont, CA 94538, USA
www.optoma.com.br

888-289-6786
510-897-8601
www.optoma.com.mx

Korea

WOOMI TECH.CO.,LTD.
4F,Minu Bldg.33-14, Kangnam-Ku,
seoul,135-815, KOREA

+82+2+34430004
+82+2+34430005

Japan

東京都足立区綾瀬3-25-18
株式会社オーエスエム
サポートセンター:0120-46-5040

info@osscreen.com
www.os-worldwide.com

Taiwan

12F., No.215, Sec. 3, Beixin Rd.,
Xindian Dist., New Taipei City 231,
Taiwan, R.O.C.
www.optoma.com.tw

+886-2-8911-8600
+886-2-8911-6550
services@optoma.com.tw
asia.optoma.com

Hong Kong

Unit A, 27/F Dragon Centre,
79 Wing Hong Street,
Cheung Sha Wan,
Kowloon, Hong Kong

+852-2396-8968
+852-2370-1222
www.optoma.com.hk

China

5F, No. 1205, Kaixuan Rd.,
Changning District
Shanghai, 200052, China

+86-21-62947376
+86-21-62947375
www.optoma.com.cn

Regulation & Safety Notices

This appendix lists the general notices of your projector.

FCC notice

This device has been tested and found to comply with the limits for a Class A digital device pursuant to Part 15 of the FCC rules. These limits are designed to provide reasonable protection against harmful interference in a residential installation. This device generates, uses and can radiate radio frequency energy and, if not installed and used in accordance with the instructions, may cause harmful interference to radio communications.

However, there is no guarantee that interference will not occur in a particular installation. If this device does cause harmful interference to radio or television reception, which can be determined by turning the device off and on, the user is encouraged to try to correct the interference by one or more of the following measures:

- Reorient or relocate the receiving antenna.
- Increase the separation between the device and receiver.
- Connect the device into an outlet on a circuit different from that to which the receiver is connected.
- Consult the dealer or an experienced radio/television technician for help.

Notice: Shielded cables

All connections to other computing devices must be made using shielded cables to maintain compliance with FCC regulations.

Caution

Changes or modifications not expressly approved by the manufacturer could void the user's authority, which is granted by the Federal Communications Commission, to operate this projector.

Operation conditions

This device complies with Part 15 of the FCC Rules. Operation is subject to the following two conditions:

1. This device may not cause harmful interference and
2. This device must accept any interference received, including interference that may cause undesired operation.

Notice: Canadian users

This Class A digital apparatus complies with Canadian ICES-003.

Remarque à l'intention des utilisateurs canadiens

Cet appareil numerique de la classe A est conforme a la norme NMB-003 du Canada.

Declaration of Conformity for EU countries

- EMC Directive 2004/108/EC (including amendments)
- Low Voltage Directive 2006/95/EC
- R & TTE Directive 1999/5/EC (if product has RF function)

Disposal instructions

Do not throw this electronic device into the trash when discarding. To minimize pollution and ensure utmost protection of the global environment, please recycle it.