USA's primary source for projector lamps
myprojectorlamps

PROJECTOR OWNER'S MANUAL

Optoma

EH7500

Need a replacement lamp for this projector?

www.myprojectorlamps.com

Original manufacturer manual, provided unmodified as a courtesy of MyProjectorLamps.com.
All trademarks belong to their respective owners.

Table of Contents

Table of Contents 1
Usage Notice 2
Safety Information.....2
Precautions.....3
Eye Safety Warnings 5
Product Features 5
Introduction.....6
Package Overview.....6
Product Overview 7
Main Unit..... 7
Control Panel..... 8
Input/Output Connections..... 9
Remote Control..... 10
Installation 11
Connecting the Projector 11
Install the Projection Lens..... 11
Connect to Computer/Notebook 12
Connect to Video Sources..... 13
Powering the projector On / Off 14
Powering On the Projector..... 14
Powering Off the Projector..... 15
Warning Indicator..... 16
Adjusting the Projected Image.....17
Adjusting the Projector's Height 17
Adjusting the Projector's Position..... 18
User Controls 20
Control Panel & Remote Control 20
Control Panel..... 20
Remote Control..... 21
On-screen Display Menus 23
How to operate 23
Menu Tree..... 24
IMAGE..... 26
IMAGE | Advanced 28
DISPLAY..... 30
DISPLAY | PIP 33
SETUP..... 34
SETUP | Lens Function 36
SETUP | Security..... 37
SETUP | Signal (RGB)..... 39
SETUP | Signal (Video) 40
SETUP | Advanced 41
SETUP | Network..... 42
OPTION..... 45
OPTION | Remote Settings 47
OPTION | Advanced 49
OPTION | Lamp Settings..... 50
OPTION | Information..... 51
Appendices.....52
Troubleshooting 52
Replacing the lamp 57
Compatibility Modes 59
Computer Compatibility (PC)..... 59
Video Compatibility..... 60
Computer Compatibility (MAC)..... 61
RS232 Commands and Protocol Function List 62
RS232 Pin Assignments..... 62
RS232 Protocol Function List..... 63
Ceiling Mount Installation.....66
Optoma Global Offices 67
Regulation & Safety Notices.....69

Safety Information

	The lightning flash with arrow head within an equilateral triangle is intended to alert the user to the presence of uninsulated “dangerous voltage” within the product’s enclosure that may be of sufficient magnitude to constitute a risk of electric shock to persons.
	The exclamation point within an equilateral triangle is intended to alert the user to the presence of important operating and maintenance (servicing) instructions in the literature accompanying the appliance.

WARNING: TO REDUCE THE RISK OF FIRE OR ELECTRIC SHOCK, DO NOT EXPOSE THIS APPLIANCE TO RAIN OR MOISTURE. DANGEROUS HIGH VOLTAGES ARE PRESENT INSIDE THE ENCLOSURE. DO NOT OPEN THE CABINET. REFER SERVICING TO QUALIFIED PERSONNEL ONLY.

Class A emissions limits

This Class A digital apparatus meets all requirements of the Canadian Interference-Causing Equipment Regulations.

Important Safety Instruction

1. Do not block any ventilation openings. To ensure reliable operation of the projector and to protect from over heating, it is recommended to install the projector in a location that does not block ventilation. As an example, do not place the projector on a crowded coffee table, sofa, bed, etc. Do not put the projector in an enclosure such as a book case or a cabinet that restricts air flow.
2. Do not use the projector near water or moisture. To reduce the risk of fire and/or electric shock, do not expose the projector to rain or moisture.
3. Do not install near heat sources such as radiators, heaters, stoves or any other apparatus such as amplifiers that emits heat.
4. Clean only with dry cloth.
5. Only use attachments/accessories specified by the manufacturer.
6. Do not use the unit if it has been physically damaged or abused. Physical damage/abuse would be (but not limited to):
   - ❒ Unit has been dropped.
   - ❒ Power supply cord or plug has been damaged.
   - ❒ Liquid has been spilled on to the projector.
   - ❒ Projector has been exposed to rain or moisture.
   - ❒ Something has fallen in the projector or something is loose inside.

   Do not attempt to service the unit yourself. Opening or removing covers may expose you to dangerous voltages or other hazards. Please call Optoma before you send the unit for repair.
7. Do not let objects or liquids enter the projector. They may touch dangerous voltage points and short out parts that could result in fire or electric shock.
8. See projector enclosure for safety related markings.
9. The unit should only be repaired by appropriate service personnel.

Precautions

Please follow all warnings, precautions and maintenance as recommended in this user's guide.

- Warning- Do not look into the projector's lens when the lamp is on. The bright light may hurt and damage your eyes.
- Warning- To reduce the risk of fire or electric shock, do not expose this projector to rain or moisture.
- Warning- Please do not open or disassemble the projector as this may cause electric shock.
- Warning- When replacing the lamp, please allow the unit to cool down. Follow instructions as described on pages 57-58.
- Warning- This projector will detect the life of the lamp itself. Please be sure to change the lamp when it shows warning messages.
- Warning- Reset the "Lamp Reset" function from the on-screen display "OPTION | Lamp Settings" menu after replacing the lamp module (refer to page 50).
- Warning- When switching the projector off, please ensure the cooling cycle has been completed before disconnecting power. Allow 60 seconds for the projector to cool down.
- Warning- Do not use lens cap when projector is in operation.
- Warning- When the lamp is approaching the end of its lifetime, the message "Lamp Warning: Lamp life exceeded." will show on the screen. Please contact your local reseller or service center to change the lamp as soon as possible.
- Warning- Do not look into or point the laser pointer on your remote control into your or someone's eyes. Laser pointer can cause permanent damage to eyesight.

Usage Notice

Do:

- Turn off and unplug the power plug from the AC outlet before cleaning the product.
- Use a soft dry cloth with mild detergent to clean the display housing.
- Disconnect the power plug from AC outlet if the product is not being used for a long period of time.

Do not:

- Block the slots and openings on the unit provided for ventilation.
- Use abrasive cleaners, waxes or solvents to clean the unit.
- Use under the following conditions:
  - In extremely hot, cold or humid environments.
    - Ensure that the ambient room temperature is within 5 - 40°C.
    - Relative Humidity is 5 - 40°C, 80% (Max.), non-condensing.
  - In areas susceptible to excessive dust and dirt.
  - Near any appliance generating a strong magnetic field.
  - In direct sunlight.

Eye Safety Warnings

- Avoid staring/facing directly into the projector beam at all times. Keep your back to the beam as much as possible.
- When projector is used in a classroom, adequately supervise students when they are asked to point out something on the screen.
- In order to minimize the lamp power, use room blinds to reduce ambient light levels.

Product Features

- WUXGA (1920 x 1200) Native resolution
- HD compatible – 1080p supported
- Extensive optional lens
- Wide lens shift range for installation flexibility
- Dual lamp system
- Comprehensive input/output terminals and control interfaces
- Network support

Package Overview

Unpack and inspect the box contents to ensure all parts listed below are in the box. If something is missing, please contact your nearest customer service center.

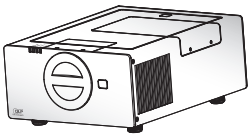

Projector

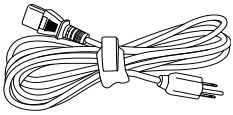

Power Cord 3.0m

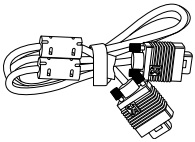

VGA Cable 1.8m

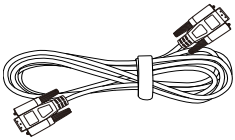

RS232 Cable 1.8m

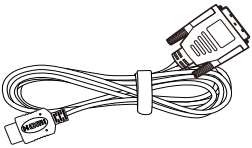

DVI/HDMI Cable 30cm

IR Remote Control

Note

- Due to different applications in each country, some regions may have different accessories.

Documentation :

- ☑ User's Manual
- ☑ Warranty Card
- ☑ Quick Start Card
- ☑ WEEE Card (for EMEA only)

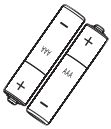

2 × AA Batteries

Product Overview

Main Unit

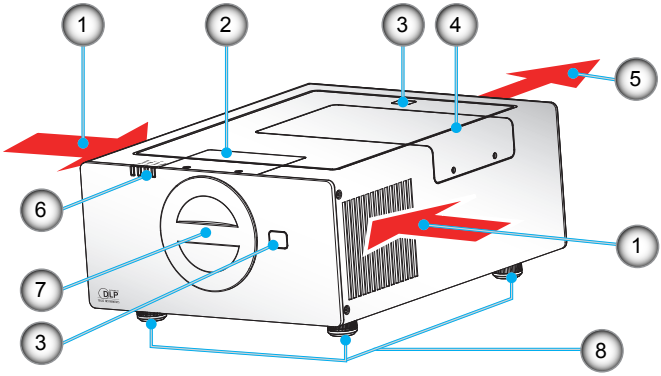

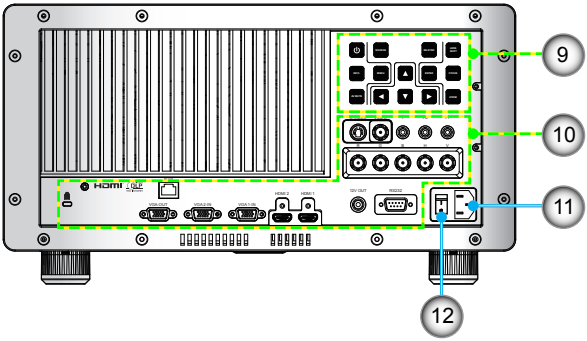

1. Ventilation (inlet)
2. Lens Door
3. IR Receivers
4. Lamp Door
5. Ventilation (outlet)
6. Indicator LED
7. Projector Cap
8. Tilt-Adjustment Feet
9. Control Panel
10. Input / Output Connections
11. Power Socket
12. Power Switch

Control Panel

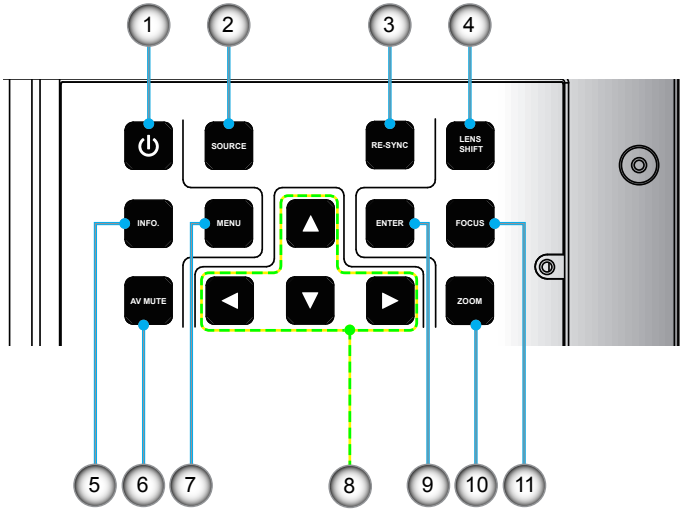

1. Power button
2. SOURCE
3. RE-SYNC
4. LENS SHIFT
5. Information
6. AV MUTE
7. MENU
8. Four Directional Select Keys
9. ENTER
10. ZOOM
11. FOCUS

Input/Output Connections

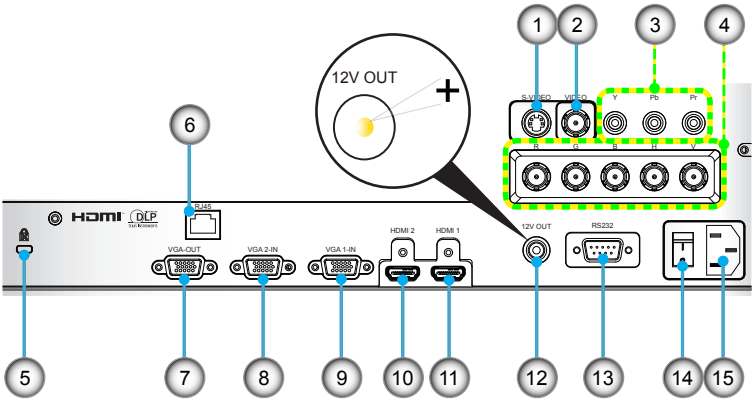

1. S-Video Input Connector
2. Composite Video Input Connector
3. Component Video Input Connector (YPbPr)
4. BNC Input Connector (YPbPr/RGBHV)
5. Kensington™ Lock Port
6. RJ-45 Networking Connector
7. VGA-Out Connector (Monitor Loop-through Output)
8. VGA2-In/YPbPr Connector
   (PC Analog Signal/Component Video Input/HDTV/YPbPr)
9. VGA1-In/YPbPr Connector
   (PC Analog Signal/Component Video Input/HDTV/YPbPr)
10. HDMI 1 Connector
11. HDMI 2 Connector
12. 12V Trigger Relay Connector (12V, 250mA)
13. RS-232 Connector (9-pin DIN Type)
14. Power Switch
15. Power Socket

Remote Control

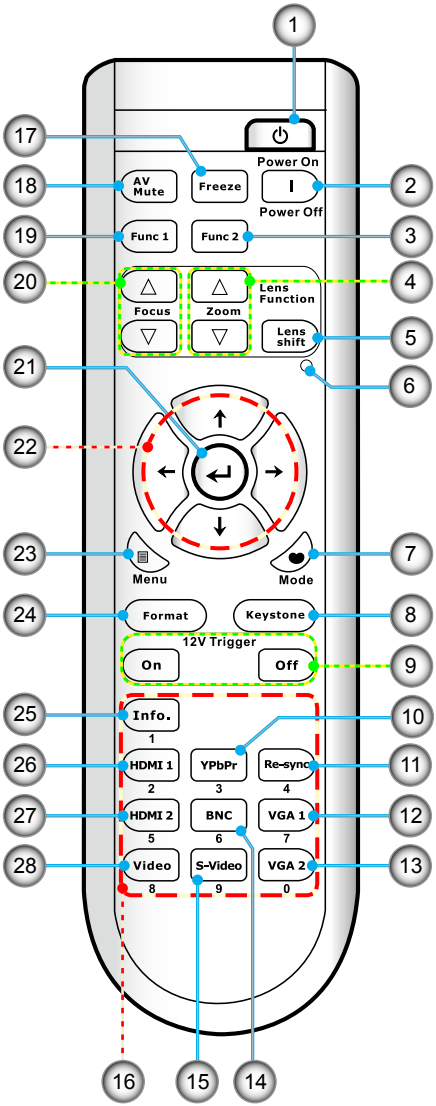

1. Power On
2. Power Off
3. Function 2 (Programmable see P.47)
4. Lens Zoom +/-
5. Lens Shift
6. LED Indicator
7. Display Mode
8. Keystone +/-
9. 12V Trigger On/Off
10. YPbPr
11. Re-Sync
12. VGA 1
13. VGA 2
14. BNC
15. S-Video
16. Numbered keypad (for password input)
17. Freeze
18. AV mute
19. Function 1 (Programmable see P.47)
20. Lens Focus +/-
21. Enter/Help
22. Four Directional Select Keys
23. Menu
24. Format (Image Aspect Ratio)
25. Information
26. HDMI 1
27. HDMI 2
28. Video

Connecting the Projector

Install the Projection Lens

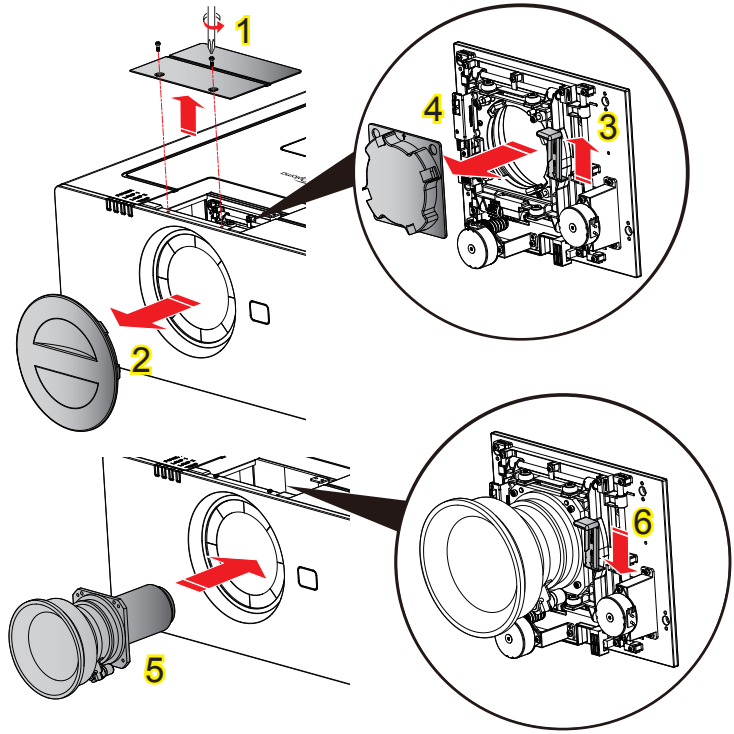

- Before install or replacing the lens, switch off the power to the projector
- Avoid using the remote control or projector keypad button to adjust the lens shift or zoom/ focus while the lens attachment process is carried out.

Install Lens Procedure:

1. Unscrew the 2 screws and lift up the lens door. 1
2. Remove the projector cap. 2
3. Push the release lever up to release the lock. 3
4. Remove the lens cap. 4
5. Push the lens into position. 5
6. Push the release lever down to lock the lens in place. 6

To replace the lens, reverse the previous steps.

Connect to Computer/Notebook

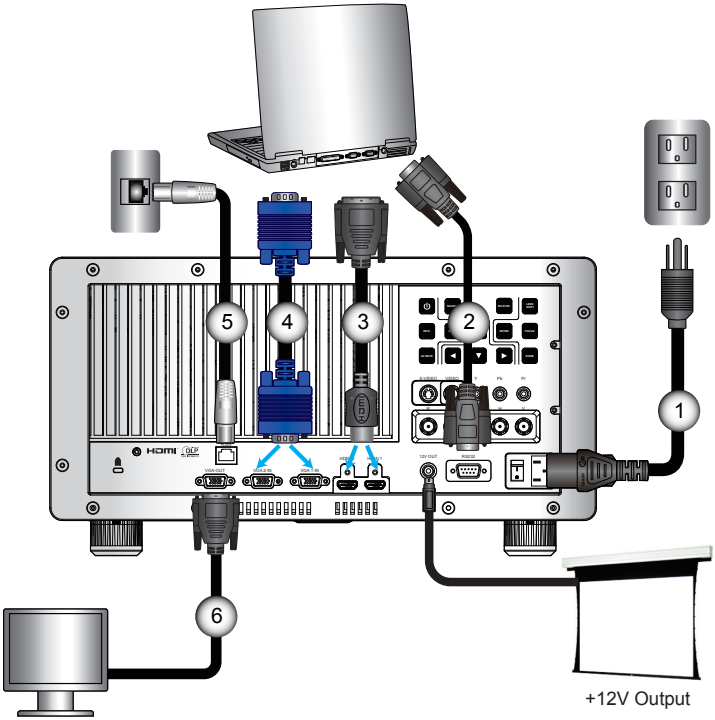

- Due to the difference in applications for each country, some regions may have different accessories.
- (*) Optional accessory

1.....Power Cord
2.....RS232 Cable
3.....DVI/HDMI Cable
4.....VGA Cable
5.....*Network Cable
6.....*VGA Output Cable

Connect to Video Sources

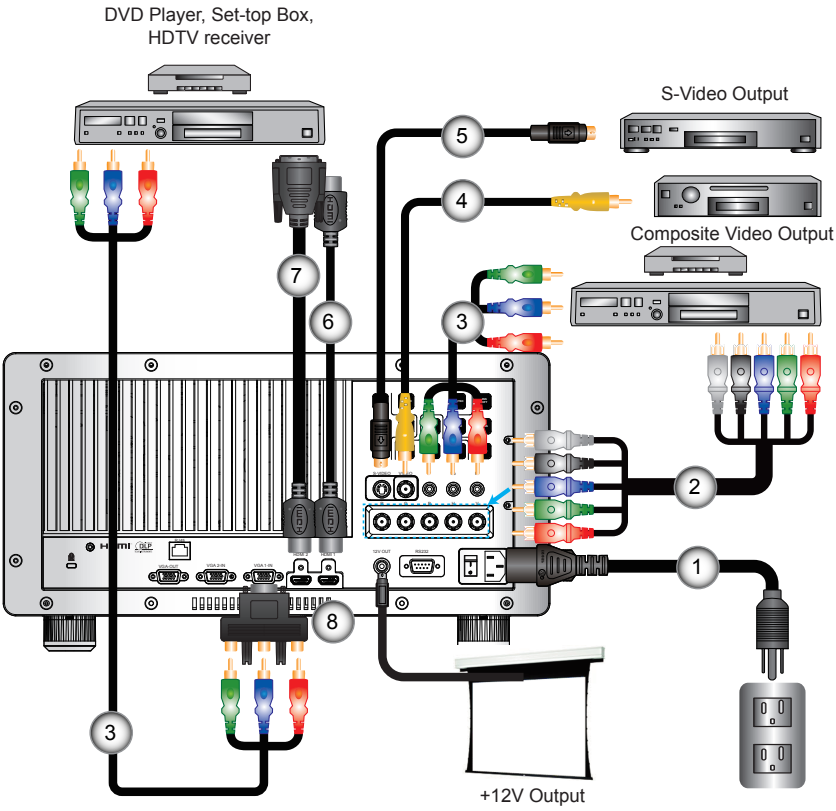

Note

- Due to the difference in applications for each country, some regions may have different accessories.
- (*) Optional accessory

1.....Power Cord
2.....*BNC Cable
3.....*3 RCA Component Cable
4.....*Composite Video Cable
5.....*S-Video Cable
6.....*HDMI Cable
7.....DVI/HDMI Cable
8.....*15-Pin to 3 RCA Component/HDTV Adaptor

Powering the projector On / Off

Powering On the Projector

1. Remove the projector cap. 1
2. Securely connect the power cord and signal cable. Power on the switch 2 and the Power LED flashes Red.
3. Turn on the lamp by pressing "⏻" button either on the rear of the projector or on the remote. The POWER LED will now turn Blue. 3

   The startup screen will display in approximately 10 seconds. The first time you use the projector, you will be asked to select the preferred language and power saving mode.

4. Turn on and connect the source that you want to display on the screen (computer, notebook, video player, etc). The projector will detect the source automatically. If not, push menu button and go to "OPTION".
   Make sure that the "Source Lock" has been set to "Off".

❖ If you connect multiple sources at the same time, press the "SOURCE" button on the control panel or direct source keys on the remote control to switch between inputs.

NOTE

❖ When Power mode (Standby) is set to Eco, the VGA and RJ45 will be deactivated when the projector is in standby.

NOTE

❖ Turn on the projector first and then select the signal sources.

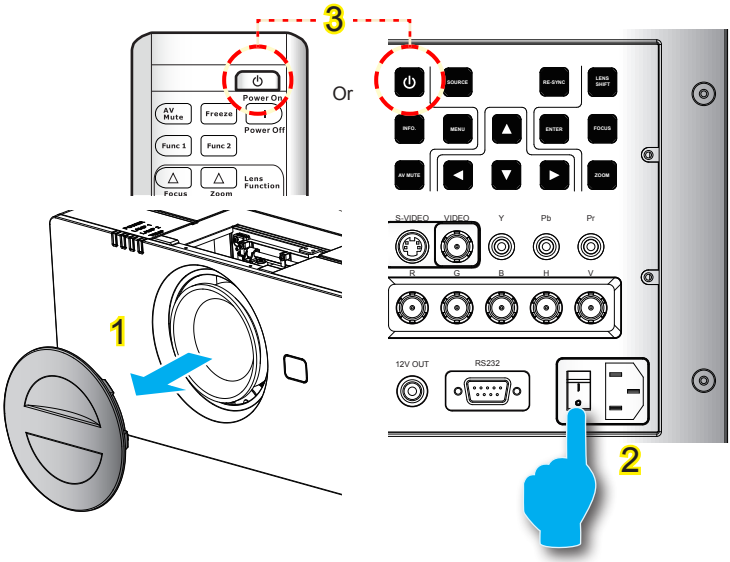

Powering Off the Projector

1. Press the "|" button on the remote control or press the "⏻" button on the control panel to turn off the projector. 4
   The following message will be displayed on the screen.

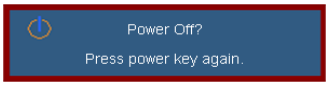

   Press the "|" button on the remote control or press the "⏻" button on the control panel again 4 to confirm otherwise the message will disappear after 15 seconds. When you pressing for the second time, the projector will shut down.
2. The cooling fans continue to operate for about 60 seconds for cooling cycle and the POWER LED will flash Blue. When the POWER LED lights solid Blue, the projector has entered standby mode.

   If you wish to turn the projector back on, you must wait until the projector has completed the cooling cycle and has entered standby mode. Once in standby mode, simply press the "|" button on the remote control or press the "⏻" button on the control panel to restart the projector. 4
3. Power off the switch. 2
4. Disconnect the power cord from the electrical outlet and the projector.
5. Do not turn on the projector immediately following a power off procedure.

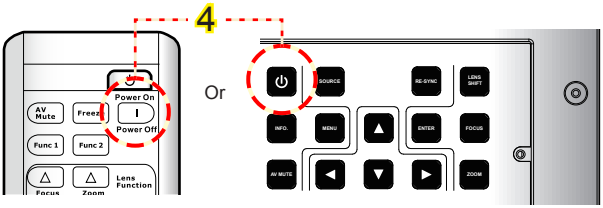

Warning Indicator

Note

- Contact the nearest service center if the projector displays these symptoms. See pages 67-68 for more information.

When the warning indicators (see below) come on, the projector will automatically shutdown:

- “LAMP1” or “LAMP2” LED indicator is lit red and if “POWER” LED indicator flashes red.
- “TEMP” LED indicator is lit red and if “POWER” LED indicator flashes red. This indicates the projector has overheated. Under normal conditions, the projector can be switched back on.
- “TEMP” LED indicator flashes red and if “POWER” LED indicator flashes red.

Unplug the power cord from the projector, wait for 30 seconds and try again. If the warning indicator light up again, please contact your nearest service center for assistance.

Adjusting the Projected Image

Adjusting the Projector's Height

The projector is equipped with elevator feet for adjusting the image height.

1. Locate the adjustable foot you wish to modify on the underside of the projector.
2. Rotate the adjustable ring clockwise to raise the projector or counter clockwise to lower it. Repeat with the remaining feet as needed.

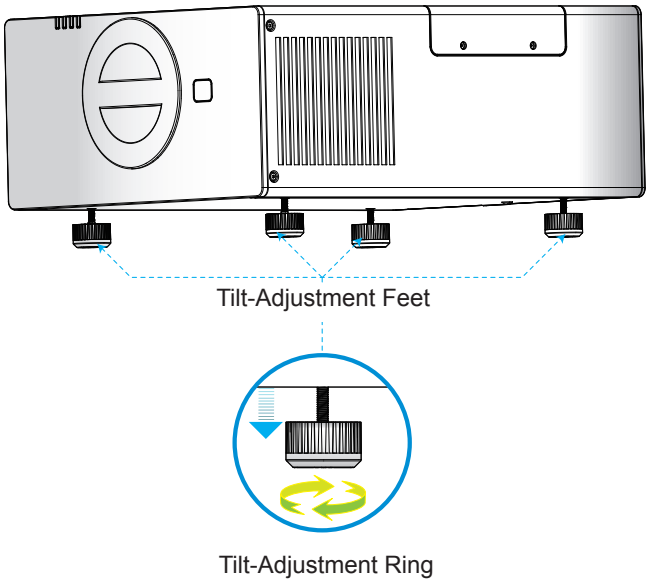

Adjusting the Projector's Position

To determine where to position the projector, consider the size and shape of your screen, the location of your power outlets, and the distance between the projector and the rest of your equipment. Example:

- ST1 Lens: The projector will focus at distances from 3.08 to 68.6 feet (0.94 to 20.9 meters).

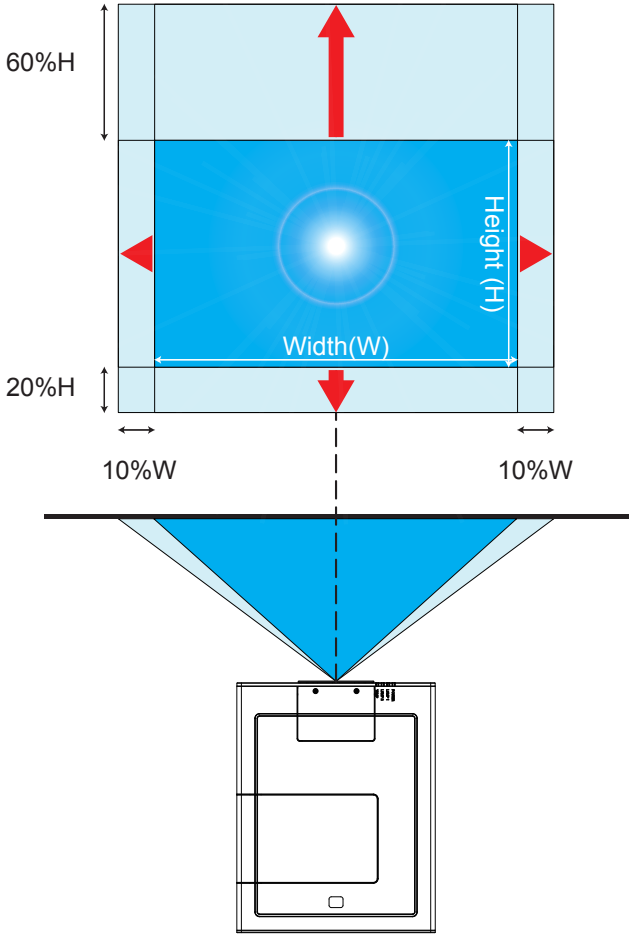

Lens

Optoma Model Name	WT1	WT2	ST1	TZ1	TZ2
Focal Length (f) (mm)	11.73	18.1~21.72	21.5~28.7	28.6~54.33	54.06~102.7
F number	2.2	2.2-3.33	2.0-3.0	2.2-3.0	2.3~3.16
Zoom Range (Ratio)	Fixed	1.2x	1.33x	1.9x	1.9x
Zoom & Focus Adjust-ment	Motorized				
Throw Ratio	0.77	1.2~1.45	1.45~1.94	1.94~3.67	3.67~6.98
Throw Distance (m)	0.5~8.3	0.78~15.6	0.94~20.9	1.25~39.5	2.37~75.2
Throw Distance (feet)	1.64~27.23	2.56~51.18	3.08~68.57	4.10~129.59	7.78~246.72
Projection Image Size	30”~500” inches				
Motorized Lens Shift	Fixed	Horizontal : +/-10% offset, Vertical : -20%~+60% offset			

❖ This table is for user’s reference only.

Control Panel & Remote Control

Control Panel

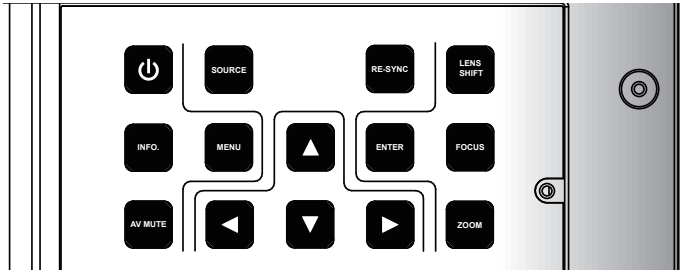

Using the Control Panel	
Power	Refer to the “Power On/Off the Projector” section on pages 14-15.
SOURCE	Press “SOURCE” to select an input signal.
RE-SYNC	Automatically synchronize the projector to the input source.
LENS SHIFT	Adjust Lens shift up/down/left/right
Information	Display the projection’s information.
AV MUTE	Momentarily turns off/on the audio and video.
MENU	Press “Menu” to launch the on-screen display (OSD) menu. To exit OSD, Press “Menu” again.
Four Directional Select Keys	Use ▲ ▼ ◀ ▶ to select items or make adjustments to your selection.
ENTER	Confirm your item selection.
ZOOM	Adjust lens zoom function.
FOCUS	Adjust lens focus function.

Remote Control

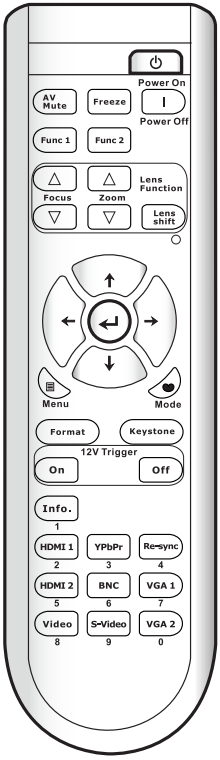

Using the Remote Control	
Power On	Refer to the “Power On/Off the Projector” section on pages 14-15.
Power Off	Refer to the “Power On/Off the Projector” section on pages 14-15.
Function 2	Adjust Function 2 settings.
Lens Zoom +/-	Adjust lens zoom function.
Lens Shift	Adjust lens shift function.
LED Indicator	Indicate Lens function status. LED indicator light that is in use.
Mode	Select the display mode from Presentation, Bright, Movie, sRGB, Blackboard, Class-room, User1 and User2.
Keystone	Adjust image distortion caused by tilting the projector.
12V Trigger On/Off	Select the 12V Trigger function.
YPbPr	Press “YPbPr” to choose component video (YPbPr) input connector source.
Re-SYNC	Automatically synchronizes the projector to the input source.
VGA 1	Press “VGA 1” to choose VGA1-In input connector source.
VGA 2	Press “VGA 2” to choose VGA2-In input connector source.
BNC	Press “BNC” to choose BNC (YPbPr/RG-BHV) input connector source.

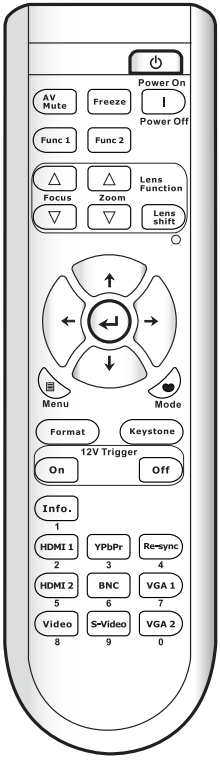

Using the Remote Control

S-Video	Press “S-Video” to choose S-Video input connector source.
Numbered keypad	Press “0~9” to input a password in the “Security” settings.
Freeze	Press “Freeze” to pause the screen image. Press this button again to unlock.
AV Mute	Momentarily turns off/on the audio and video.
Function 1	Adjust Function 1 settings.
Lens Focus +/-	Adjust lens focus function.
Enter ↵/ Information ?	↵ Confirm your item selection. ? Display the projector’s information.
Four Directional Select Keys	Use ▲ ▼ ◀ ▶ to select items or make adjustments to your selection.
Menu ▤	Press “Menu” to launch the on-screen display (OSD) menu. To exit OSD, press “Menu” again.
Format	Select the desired aspect ratio (refer to page 30).
Info. (Information)	Display the projection’s information.
HDMI 1	Press “HDMI 1” to choose HDMI 1 input connector source.
HDMI 2	Press “HDMI 2” to choose HDMI 2 input connector source.
Video	Press “Video” to choose composite video source.

On-screen Display Menus

The Projector has multilingual On-screen Display menus that allow you to make image adjustments and change a variety of settings.

How to operate

1. To open the OSD menu, press “Menu” on the Remote Control or Projector Keypad.
2 When OSD is displayed, use ◀ ▶ keys to select any item in the main menu. While making a selection on a particular page, press ▼ or “Enter” key to enter sub menu.
3. Use ▲ ▼ keys to select the desired item and adjust the settings using ◀ ▶ key.
4. Select the next item to be adjusted in the sub menu and adjust as described above.
5. Press “Enter” to confirm, and the screen will return to the main menu.
6. To exit, press “MENU” again. The OSD menu will close and the projector will automatically save the new settings.

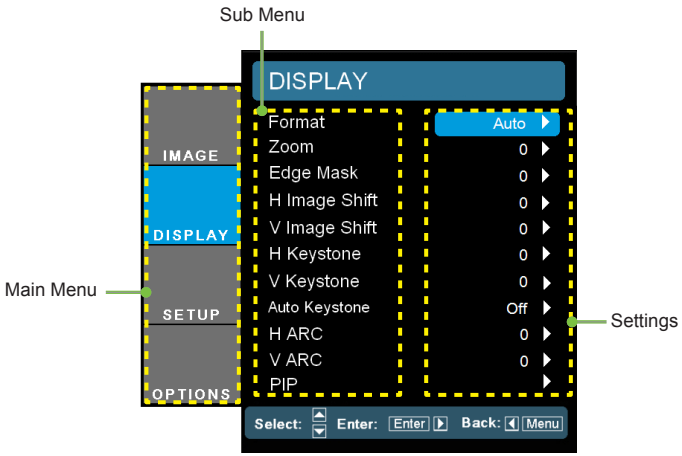

Menu Tree

Main Menu	Sub Menu		Settings
Image	Display Mode		Presentation / Bright / Movie / sRGB / Blackboard / Classroom / User 1/ User 2
	Brightness		
	Contrast		
	Sharpness		
	#1 Color		
	#1 Tint		
	Advanced	Noise Reduction	
		BrilliantColor™	
		Degamma	Film / Video / Graphics / Standard
		True Vivid	
		Color Temp.	Warm / Medium / Cold
		Color Space	AUTO / RGB / YUV
			#2 AUTO / RGB(0-255) / RGB(16-235) / YUV
		Color Settings	Red Gain / Green Gain / Blue Gain / Red Bias / Green Bias / Blue Bias / Reset / Exit
		Input Source	HDMI 1 / HDMI 2 / BNC / VGA1 / VGA2 / Component / S-Video / Video / Exit
		Exit	
Display	Format		4:3 / 16:9 / 16:10 / LBX / Native / AUTO
	Zoom		
	Edge Mask		
	H Image Shift		
	V Image Shift		
	H Keystone		
	V Keystone		
	Auto Keystone		On / Off
	H ARC		
	V ARC		
	PIP	Screen	
		PIP Location	
		PIP Size	
		PIP Source	
		Swap	
		Exit	
Setup	Language		**English / Deutsch / Français / Italiano / Español / Português / Svenska / Nederlands / Norsk/Dansk / Polski / Suomi / Русский / ελληνικά / Magyar / Čeština / فارسی / عربی /繁體中文 / 简体中文 / 日本語 /한국어 / ไทย / Türkçe**
	Projection		
	#3 Screen Type		16:10 (1920 x 1200) / 16:9 (1920 x 1080)
	Menu Location		
	Lens Function	Focus	
		Zoom	
		Lens Shift	Lock / Unlock
		Lens Type	WT1 / WT2 / ST1 / TZ1 / TZ2
		Lens Calibration	Yes / No
		Exit	
	Security	Security	On / Off
		Security Timer	Month / Day / Hour
		Change Password	
		Exit	

NOTE

- Please note that the on-screen display (OSD) menus vary according to the signal type selected and the projector model you are using.
- (#1) “Color” and “Tint” are only supported in Video mode.
- (#2) For HDMI model only.
- (#3) Input 1920x1200 or 1600x1200 resolution, 16:9 selection of screen type and format will be gray out.

Main Menu	Sub Menu		Settings
Setup	Signal (RGB)	Automatic	Enable / Disable
		Phase	
		Frequency	
		H. Position	
		V. Position	
		Exit	
	Signal (Video)	White Level	
		Black Level	
		Saturation	
		Hue	
		IRE	
		Exit	
	Projector ID		
	Advanced	Logo	Optoma / Neutral / User
		Logo Capture	
		Closed Captioning	Off / CC1 / CC2
		Exit	
	Network	Network State	
		DHCP	
		IP Address	
		Subnet mask	
		Gateway	
		DNS	
		Apply	Yes / No
		Exit	
Option	Source Lock		On / Off
	High Altitude		On / Off
	Information Hide		On / Off
	Keypad Lock		On / Off
	Test Pattern		None / Grid / White
	Background Color		Black / Red / Blue / Green / White
	Remote Settings	Function 1	Brightness / PIP / Test Pattern / Zoom / Projection / V ARC+ / H ARC+
		Function 2	Contrast / PIP Source / PIP Swap / Color / V ARC- / H ARC- / Lamp Settings
		IR Function	On / Off
		Remote Code	IR1 / IR2 / IR3 / IR4
		Exit	
	12V Trigger		On / Off
	Advanced	Direct Power On	On / Off
		Signal Power On	On / Off
		Auto Power Off (min.)	
		Sleep Timer (min.)	
		Power Mode (Standby)	Eco. / Active
		Exit	
	Lamp Settings	Lamp Mode	Dual / Relay / Lamp 1 / Lamp 2
		Lamp 1 Hours	
		Lamp 2 Hours	
		Lamp 1 Reset	Yes / No
		Lamp 2 Reset	Yes / No
		Lamp Reminder	On / Off
		Brightness Mode	Bright / STD / Image AI
		Exit	
	VGA Out		Auto / VGA 1 / VGA 2
	Information		
	Reset		Yes / No

IMAGE

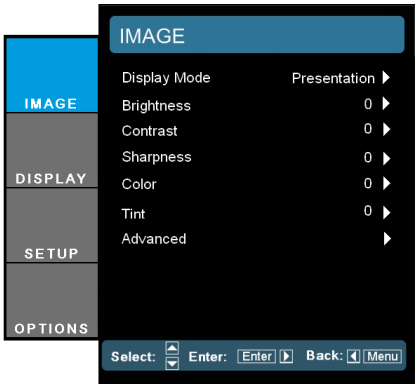

Display Mode

There are many factory presets optimized for various types of images.

- Presentation: Good color and brightness from PC input.
- Bright: Maximum brightness from PC input.
- Movie: For home theater.
- sRGB: Standardised accurate color.
- Blackboard: This mode should be selected to achieve optimum color settings when projecting onto a blackboard (green).
- Classroom: This mode is recommended for projecting in a classroom.
- User1/User2: User's settings.

Brightness

Adjust the brightness of the image.

- Press the ◀ to darken image.
- Press the ▶ to lighten the image.

Contrast

The contrast controls the degree of difference between the lightest and darkest parts of the picture.

- Press the ◀ to decrease the contrast.
- Press the ▶ to increase the contrast.

Sharpness

Adjust the sharpness of the image.

- Press the ◀ to decrease the sharpness.
- Press the ▶ to increase the sharpness.

Color

Adjust a video image from black and white to fully saturated color.

- Press the ◀ to decrease the amount of saturation in the image.
- Press the ▶ to increase the amount of saturation in the image.

Tint

Adjust the color balance of red and green.

- Press the ◀ to increase the amount of green in the image.
- Press the ▶ to increase the amount of red in the image.

NOTE

- "Color" and "Tint" functions are only supported under Video mode.

IMAGE | Advanced

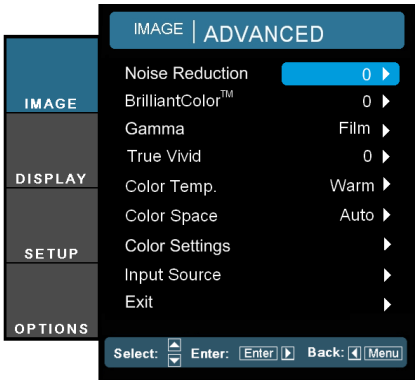

Noise Reduction

The motion Adaptive Noise Reduction reduces the amount of visible noise interlaced signals. The range is from “0” to “10”. (0: Off)

BrilliantColor™

This adjustable item utilizes a new color-processing algorithm and system level enhancements to enable higher brightness while providing true, more vibrant colors in picture. The range is from “0” to “10”. If you prefer a stronger enhanced image, adjust toward the maximum setting. For a smoother, more natural image, adjust toward the minimum setting.

Gamma

This allows you to choose a gamma table that has been fine-tuned to bring out the best image quality for the input.

- Film: for home theater.
- Video: for video or TV source.
- Graphics: for image source.
- Standard: for PC or computer source.

True Vivid

This adjustable item utilizes a new color-processing algorithm and enhancements to enable the picture’s vividness to be significantly increased.

Color Temp

If set to cold temperature, the image looks more blue. (cold image)
If set to warm temperature, the image looks more red. (warm image)

Color Space

Select an appropriate color matrix type from AUTO, RGB, RGB(0-255)(*) RGB(16-235)(*) or YUV.

NOTE

❖ (*) For HDMI only.

Color Settings

Press ↵ into the next menu as below and then use ▲ or ▼ to select item.

- Red Gain/Green Gain/Blue Gain/Red Bias/Green Bias/Blue Bias: Use ◀ or ▶ to Red, Green, or Blue for brightness (Gain) and contrast (Bias).
- Reset: Choose “Yes” to return the factory default settings for color adjustments.

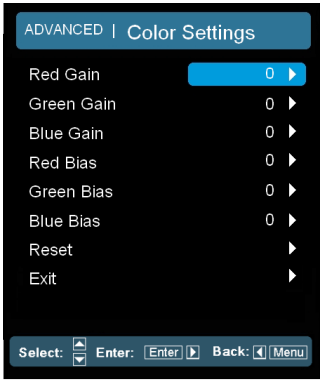

Input Source

Use this option to enable / disable input sources. Press ↵ to enter the sub menu and select which sources you require. Press “Enter” to finalize the selection. The projector will not search for inputs that are not selected.

DISPLAY

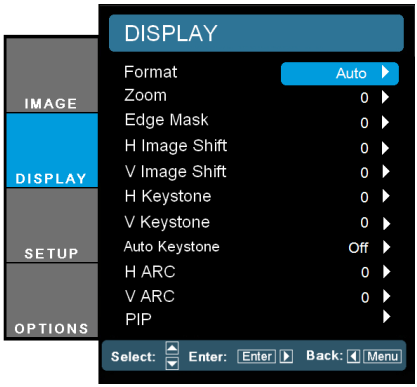

Format

Use this function to choose your desired aspect ratio.

- 4:3: This format is for 4×3 input sources.
- 16:9: This format is for 16×9 input sources, like HDTV and DVD enhanced for Wide screen TV.
- 16:10: This format is for 16x10 input sources like high resolution computer graphical applications and for large workspace for report viewing.
- LBX: This format is for non-16x9, letterbox source and for users who use external 16x9 lens to display 2.35:1 aspect ratio using full resolution.
- Native: This format displays the original image without any scaling.
- AUTO: Automatically selects the appropriate display format.

16:10 Screen	480i/p	576i/p	1080i/p	720p	PC
4:3	1600 x 1200 center				
16:9	1920 x 1080 center				
16:10	1920 x 1200 center				
LBX	1920 x 1440 center, then get the central 1920 x 1200 image to display				
Native	No resize image, 1:1 mapping and centered. This format shows original image without scaling.				

Auto	If this format is select, Screen type will auto become 16:10 (1920 x 1200) If source is 4:3, auto resize to 1600 x1200 If source is 16:9 auto resize to 1920x1080 If source is 16:10 auto resize to 1920x1200

- 16:9 or 16:10 depend on “Screen Type” setting.
- 16:9 screen type is not supported when input source is 1920x1200 or 1600x1200.

16:9 Screen	480i/p	576i/p	1080i/p	720p	PC
4:3	1440 x 1080 center				
16:9	1920 x 1080 center				
LBX	1920 x 1440 center, then get the central 1920 x 1080 image to display				
Native	No resize image, 1:1 mapping and centered. This format shows original image without scaling.				
Auto	If this format is select, Screen type will auto become 16:9 (1920x1080) If source is 4:3, auto resize to 1440 x1080 If source is 16:9 auto resize to 1920x1080 If source is 16:10 auto resize to 1920 x 1200 and cut 1920x1080 area to display				

- Each I/O has different setting of “Edge Make”.
- “Edge Make” and “Zoom” can’t work at same time.

Zoom (Digital Zoom)

- Press the ◀ to reduce the size of an image.
- Press the ▶ to magnify an image on the projection screen.

Edge Mask

Edge mask function removes the noise in a video image. Edge mask the image to remove video encoding noise on the edge of video source.

H Image Shift

Shift the projected image position horizontally.

V Image Shift

Shift the projected image position vertically.

H Keystone

Press the ◀ or ▶ to adjust image distortion horizontally. If the image looks trapezoidal, this option can help make the image rectangular.

V Keystone

Press the ◀ or ▶ to adjust image distortion vertically. If the image

looks trapezoidal, this option can help make the image rectangular.

Auto Keystone

Automatically adjusts vertical image distortion.

H ARC

Corrects optical pincushion distortion horizontally.

V ARC

Corrects optical pincushion distortion vertically.

DISPLAY | PIP

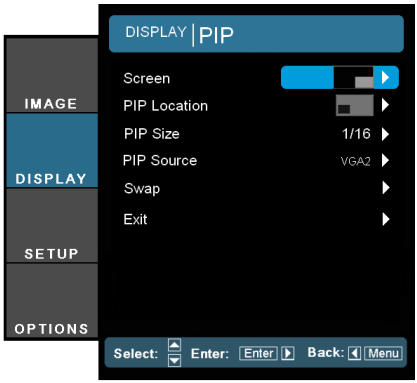

Screen

- Single: Projection single screen.
- PIP Window: Main Screen is large screen; PIP Screen is small and displays in the corner of the main screen.
- Split Screen: Main Screen and PIP Screen equal size and side by side.

PIP Location

Choose the PIP screen position on the display screen.

PIP Size

Choose the PIP size from 1/16, 1/25 or 1/36 on the display screen.

PIP Source

Choose the PIP source to switch PIP screen source.

Swap

Press ↵ to swap main screen and PIP screen.

Source 2

Source 1	VGA-2	HDMI-2	YPbPr
VGA-1	V	V	V
HDMI-1	V	V	V
BNC (RGB)	V	V	V
Video	V	V	V
S-Video	V	V	V

❖ PIP combination matrix

SETUP

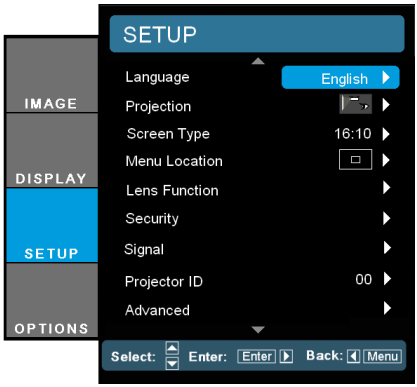

Language

Choose the multilingual OSD menu. Press ◀ or ▶ into the sub menu and then use the ▲ or ▼ key to select your preferred language. Press “Enter” to finalize the selection.

NOTE

❖ Rear-Desktop and Rear-Ceiling are to be used with a translucent screen.

Projection

Front-Desktop

This is the default selection. The image is projected straight on the screen.

Rear-Desktop

When selected, the image will appear reversed.

Front-Ceiling

When selected, the image will turn upside down.

Rear-Ceiling

When selected, the image will appear reversed in upside down position.

Screen Type

Choose the screen type from16:10 (1920 x 1200) or 16:9 (1920 x 1080).

Menu Location

Choose the menu location on the display screen.

Projector ID

ID definition can be set up by menu (range 0-99), and allow user control an individual projector by RS232. Refer to pages 63-65 for the complete list of RS232 commands.

SETUP | Lens Function

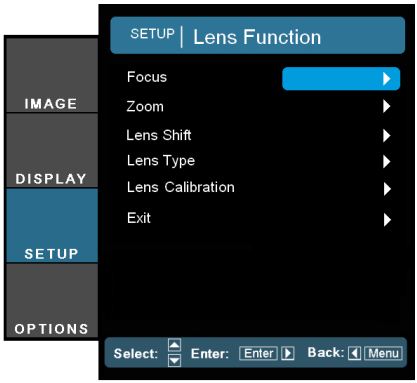

Focus

Adjust focus function on the projected image.

Zoom (Optical Zoom)

Adjust zoom function on the projected image.

Lens Shift

Shift the projected image.

- Lock: This function can not be used by user.
- Unlock: This function can be used by user.

Lens Type

Choose the lens type from WT1, WT2, ST1, TZ1 or TZ2.

Lens Calibration

Perform calibration and return lens to the center position.

SETUP | Security

Security

- On: Choose “On” to use security verification when turning on projector.
- Off: Choose “Off” to be able to switch on the projector without password verification.

❖ Password default value is “1234” (first time).

Security Timer

Use this function to set the how long (Month/Day/Hour) the projector can be used. Once this time has elapsed you will be requested to enter your password again.

Change Password

- First time:

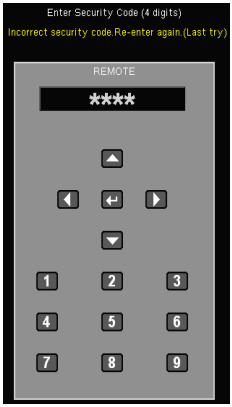

1. Press “↵” to set the password.
2. The password has to be 4 digits.
3. Use number button on the remote to enter your new password and then press “↵” key to confirm your password.

- Change Password:

1. Press “↵” to input old password.
2. Use number button to enter current password and then press “↵” to confirm.
3. Enter new password (4 digits in length) using the number buttons on the remote, then press “↵” to confirm.
4. Enter new password again and press “↵” to confirm.

- If the incorrect password is entered 3 times, the projector will automatically shut down.
- If you have forgotten your password, please contact your local office for support.

NOTE

- Always keep the password in your files. If the password is forgotten or lost, the projector will have to be sent to your local authorized service center.

SETUP | Signal (RGB)

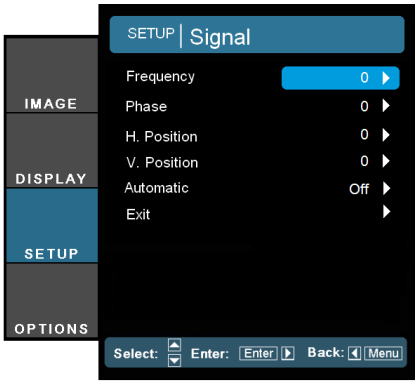

Note

- "Signal" is only supported in Analog VGA (RGB) signal.

Frequency

Change the display data frequency to match the frequency of your computer's graphic card. Use this function only if the image appears to flicker vertically.

Phase

Synchronize the signal timing of the display with the graphic card. If the image appears to be unstable or flickers, use this function to correct it.

H. Position

- Press the ◀ to move the image left.
- Press the ▶ to move the image right.

V. Position

- Press the ◀ to move the image down.
- Press the ▶ to move the image up.

Automatic

Automatically detects the signal. If you use this function, the Phase, frequency items are grayed out, and if Signal is not automatic, the phase, frequency items will appear for user to manually tune and saved in settings after that for next time projector turns off and on again.

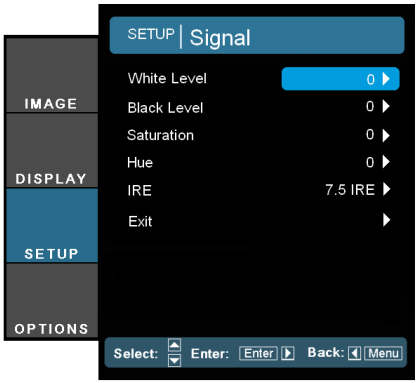

SETUP | Signal (Video)

NOTE

- "Signal" is not supported when the source is HDMI or DVI-D.

White Level

Allow user adjust White Level when inputting S-Video or Video/ CVBS signals.

Black Level

Allow user adjust Black Level when inputting S-Video or Video/ CVBS signals.

Saturation

Adjust a video image from black and white to fully saturated color.

- Press the ◀ to decrease the amount of saturation in the image.
- Press the ▶ to increase the amount of saturation in the image.

Hue

Adjust the color balance of red and green.

- Press the ◀ to increase the amount of green in the image.
- Press the ▶ to increase the amount of red in the image.

NOTE

- "IRE" is only supported on NTSC signal.

IRE

Adjust measurement of composite video signals.

SETUP | Advanced

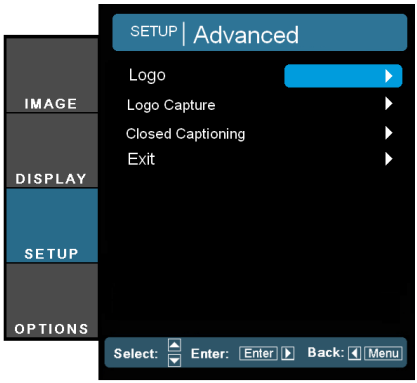

Logo

Use this function to set the desired startup screen. If changes are made they will take effect the next time the projector is powered on.

- Optoma: The default startup screen.
- Neutral: Logo is not displayed on startup screen.
- User: Use stored picture from “Logo Capture” function.

Logo Capture

Press ↵ to capture an image of the picture currently displayed on screen.

Closed Captioning

If changes are made they will take effect the next time the projector is powered on.

- Off: select “off” to turn off the closed captioning feature.
- CC1: CC1 language: American English.
- CC2: CC2 language (depending on the TV channel of the user):Spanish, French, Portuguese, German, Danish.

NOTE

- For successful logo capture, please ensure that the input signal does not exceed the projector’s native resolution. (1920x1200 or 1920x1080).
- Do not use signal with de-interlace.
- Do not turn off the projector during logo capturing.

SETUP | Network

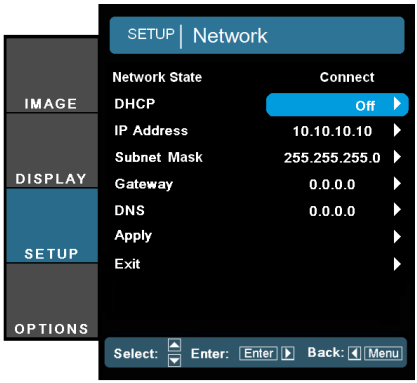

Network State

Display the network connection status.

DHCP

Use this function to select your desired startup screen. If you change the setting from one to another, when you exit the OSD menu, the new setting will take effect on next open.

- On: Assign an IP address to the projector from an external DHCP server automatically.
- Off: Assign an IP address manually.

IP Address

Select an IP address.

Subnet Mask

Select subnet mask number.

Gateway

Select the default gateway of the network connected to the projector.

DNS

Select DNS number.

Apply

Press "↵" and then choose "Yes" to apply the selection.

How to use web browser to control your projector

1. Turn on DHCP to allow the DHCP server to automatically assign an IP, or manually enter the required network information.

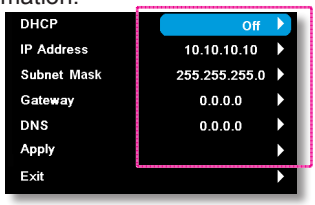

2. Then choose apply and press "↵" button to complete the configuration process.
3. Open your web browser and type in the projector's IP address from the OSD LAN screen. The following web page will display as below:

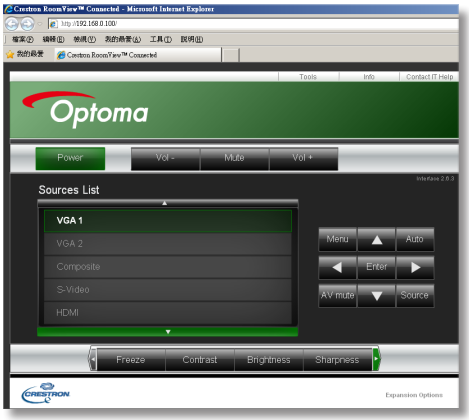

4. If connecting the projector to external Crestron control hardware, the settings can be found in the [tools] tab. (see picture).

Please note, each field can only contain a limited number of characters, as shown in the table below. (spaces and the other punctuation included):

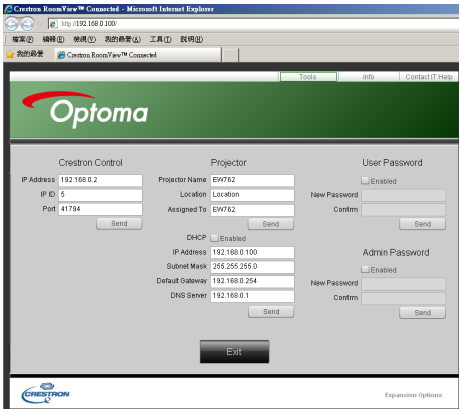

Category	Item	Input-Length (characters)
Crestron Control	IP Address	15
	IP ID	2
	Port	5
Projector	Projector Name	10
	Location	9
	Assigned To	9
Network Configuration	DHCP (Enabled)	(N/A)
	IP Address	15
	Subnet Mask	15
	Default Gateway	15
	DNS Server	15
User Password	Enabled	(N/A)
	New Password	15
	Confirm	15
Admin Password	Enabled	(N/A)
	New Password	15
	Confirm	15

When making a direct connection from your computer to the projector

Step 1: Find an IP Address (192.168.0.100) from LAN function of projector.

Step 2: Select apply and press “Enter” button to submit function or press “menu” key to exit.

Step 3: To open Network Connections, click **Start**, click **Control Panel**, click **Network and Internet Connections**, and then click **Network Connections**. Click the connection you want to configure, and then, under **Network Tasks** , click **Change settings of this connection**.

Step 4: On the **General** tab, under **This connection uses the following items**, click **Internet Protocol (TCP/IP)**, and then click “Properties.”

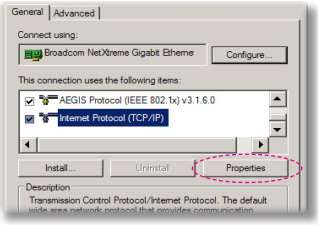

Step 5: Click **Use the following IP address**, and type in as below:

1) IP address: 192.168.0.100

2) Subnet mask: 255.255.255.0

3) Default gateway:192.168.0.254

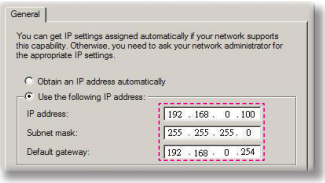

Step 6: To open Internet Options, click IE web browser, click Internet Options, click the **Connections tab** and click “LAN Settings...”

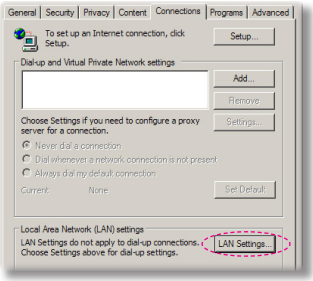

Step 7: The **Local Area Network (LAN) Setting** dialog box appears**,** In the **Proxy Server area**, cancel the **Use a proxy server for your LAN check box**., then click “OK” button twice.

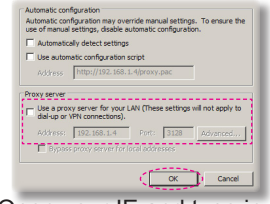

Step 8: Open your IE and type in the IP address of 192.168.0.100 in the URL then press “Enter” key.

OPTION

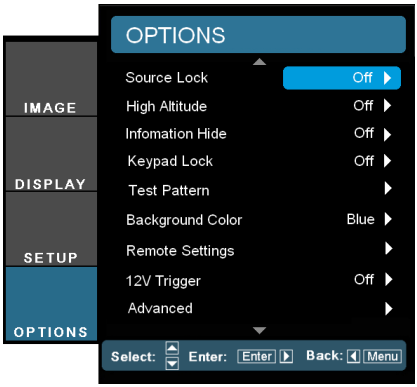

Source Lock

- On: The projector will only search current input connection.
- Off: The projector will search for other signals if the current input signal is lost.

High Altitude

When “On” is selected, the fans will spin faster. This feature is useful in high altitude areas where the air is thin.

Information Hide

- On: Choose “On” to hide the info message.
- Off: Choose “Off” to show the “searching” message.

Keypad Lock

When the keypad lock function is “On”, the control panel will be locked however, the projector can be operated by the remote control. By selecting “Off”, you will be able to reuse the control panel.

Test Pattern

Display a test pattern. There are Grid, White pattern and None.

Background Color

Use this feature to display a “Black”, “Red”, “Blue”, “Green” or “White”, screen when no signal is available.

12V Trigger

12V trigger provides a standard trigger for motorized screens.

NOTE

- Press direct source key on remote controller, it will change source directly and automatically set the Source Lock to “ON”.
- To turn off the keypad lock, press and hold “Enter” key on top of the projector for 5 seconds.

VGA Out

Use this feature to display the screen from input source.

- Auto: In standby mode (active), the default VGA out loops through from VGA1; unless VGA2 locked in last operation, VGA2 will loop through to VGA out.
- VGA 1: Choose the VGA 1-In input connector.
- VGA 2: Choose the VGA 2-In input connector.

Reset

Choose “Yes” to return the display parameters on all menus to the factory default settings.

OPTION | Remote Settings

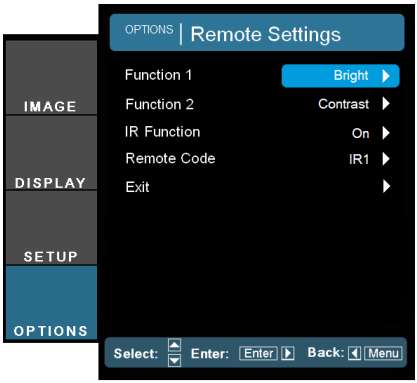

Function 1

Choose your desired function from “Brightness” , “PIP”, “Test Pattern”, “Zoom”, “Projection”, “V ARC+” or “H ARC+”.

Function 2

Choose your desired function from “Contrast” , “PIP Source”, “PIP Swap”, “Color”, “V ARC-”, “H ARC-” or “Lamp Settings”.

IR Function

When this function is “On”, the projector can be operated by the remote control. By selecting “Off”, you will only be able to use the control panel keys.

Remote Code

Set IR address of the remote. The address of the remote control is changed by pressing the Video and arrow buttons together to select IR address 1/2/3/4. The remote control LED indicator will blink twice to confirm the new remote control address.

LED indicator

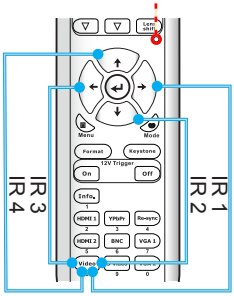

- IR 1: Press Video and RIGHT buttons together for IR 1. After finish the remote code, the remote control LED indicator will flash Green 1 time to confirm.
- IR 2: Press Video and DOWN buttons together for IR 2. After finish the remote code, the remote control LED indicator will flash Green 2 times to confirm.
- IR 3: Press Video and LEFT buttons together for IR 3. After finish the remote code, the remote control LED indicator will flash Green 3 times to confirm.
- IR 4: Press Video and UP buttons together for IR 4. After finish

the remote code, the remote control LED indicator will flash Green 4 times to confirm.

OPTION | Advanced

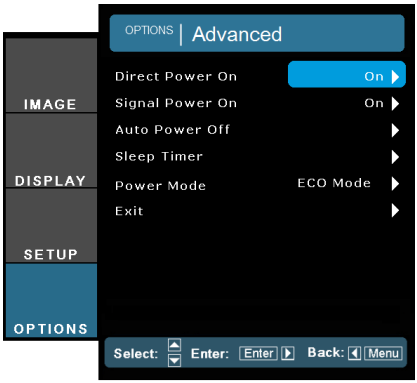

Direct Power On

Choose “On” to activate Direct Power mode. The projector will automatically power on when AC power is supplied, without pressing the “⏻” key on the projector control panel or on the remote control.

Signal Power On

The projector will power on when it receives a signal. This eliminates the need to use the “Power” button on the remote control or the projector keypad.

Auto Power Off (min)

Sets the countdown timer interval. The countdown timer will start, when there is no signal being sent to the projector. The projector will automatically power off when the countdown has finished (in minutes).

Sleep Timer (min)

Sets the countdown timer interval. The countdown timer will start, with or without a signal being sent to the projector. The projector will automatically power off when the countdown has finished (in minutes).

Power Mode (Standby)

- Eco.: Choose “Eco.” to save power dissipation further < 0.5W.
- Active: Choose “Active” to return to normal standby and the VGA out port will be enabled.

NOTE

- Eco (<0.5W) mode will disable the VGA-out and RJ45 function when the projector is in standby.

OPTION | Lamp Settings

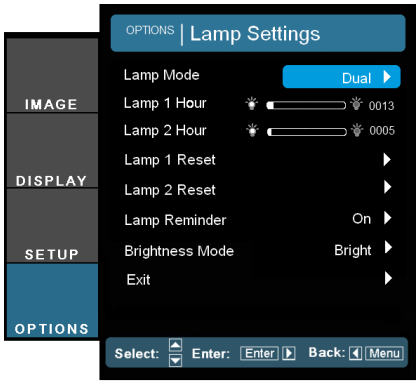

Lamp Mode

Select single/dual lamp mode of the projector.

- Dual: Default value for this function.
- Relay: When the difference in lamp life between the two lamps reaches 48 hours, the system will automatically switch to the lamp with the lower usage.
- Lamp 1: One lamp illuminates. (Lamp1 is always used.)
- Lamp 2: One lamp illuminates. (Lamp2 is always used.)

Lamp 1 Hour

Display the projection time for lamp 1.

Lamp 2 Hour

Display the projection time for lamp 2.

Lamp 1 Reset

Reset the lamp hour counter after replacing the lamp for lamp 1.

Lamp 2 Reset

Reset the lamp hour counter after replacing the lamp for lamp 2.

Lamp Reminder

Choose this function to show or to hide the warning message when the changing lamp message is displayed.
The message will appear 30 hours before suggested replacement of lamp.

Brightness Mode

- STD: Choose “STD” to dim the projector lamp which will lower power consumption and extend the lamp life.
- BRIGHT: Choose “BRIGHT” to increase the brightness.
- Image AI: Image AI improves the contrast of the picture by optimizing the brightness of the lamp according to the picture content. Image AI helps to ensure that details in dark scenes are visible, whilst maintaining bright and vivid images.

OPTION | Information

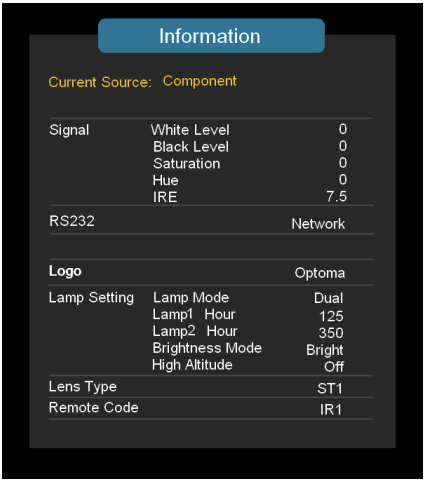

Information

Display the projector information for source, resolution, and software version on the screen.

Troubleshooting

If you experience a problem with your projector, please refer to the following information. If a problem persists, please contact your local reseller or service center.

? No image appears on-screen

- Ensure all the cables and power connections are correctly and securely connected as described in the “Installation” section.
- Ensure all the pins of connectors are not bent or broken.
- Check if the projection lamp has been securely installed. Please refer to the “Replacing the lamp” section.
- Make sure you have removed the lens cap and the projector is switched on.
- Ensure that the “AV Mute” feature is not turned on.

? Partial, scrolling or incorrectly displayed image

- Press “Re-SYNC” on the remote control or control panel.
- If you are using a PC:

  For Windows 95, 98, 2000, XP, Windows 7:

  1. Open the “My Computer” icon, the “Control Panel” folder, and then double click on the “Display” icon.
  2. Select the “Settings” tab.
  3. Verify that your display resolution setting is lower than or equal to WUXGA (1920 × 1200).
  4. Click on the “Advanced Properties” button.

  If the projector is still not projecting the whole image, you will also need to change the monitor display you are using. Refer to the following steps.

  5. Verify the resolution setting is lower than or equal to WUXGA (1920 × 1200).
  6. Select the “Change” button under the “Monitor” tab.

7. Click on “Show all devices”. Next, select “Standard monitor types” under the SP box; choose the resolution mode you need under the “Models” box.
8. Verify that the resolution setting of the monitor display is lower than or equal to WUXGA (1920 × 1200).

- If you are using a Notebook:
  1. First, follow the steps above to adjust resolution of the computer.
  2. Press the appropriate keys listed below for your notebook manufacturer to send signal out from notebook to projector. Example: [Fn]+[F4]

Acer ⇨	[Fn]+[F5]	IBM/Lenovo ⇨	[Fn]+[F7]
Asus ⇨	[Fn]+[F8]	HP/Compaq ⇨	[Fn]+[F4]
Dell ⇨	[Fn]+[F8]	NEC ⇨	[Fn]+[F3]
Gateway ⇨	[Fn]+[F4]	Toshiba ⇨	[Fn]+[F5]

Mac Apple:
System Preference ⇨ Display ⇨ Arrangement ⇨ Mirror display

- If you experience difficulty changing resolutions or your monitor freezes, restart all equipment including the projector.

? The screen of the Notebook or PowerBook computer is not displaying your presentation

- <u>If you are using a Notebook PC</u>
  Some Notebook PCs may deactivate their own screens when a second display device is in use. Each has a different way to be reactivated. Refer to your computer’s manual for detailed information.

? Image is unstable or flickering

- Use “Phase” to correct it. See page 39 for more information.
- Change the monitor color setting on your computer.

? Image has vertical flickering bar

- Use “Frequency” to make an adjustment. See page 39 for more information.
- Check and re-configure the display mode of your graphic card to make it compatible with the projector.

Image is out of focus

- Make sure the projector cap is removed.
- Adjust the Focus function on the projector lens.
- Make sure the projection screen is between the required distance. See pages 17-18.

The image is stretched when displaying 16:9 DVD title

- When you play anamorphic DVD or 16:9 DVD, the projector will show the best image when the projector display mode is set to 16:9 in the OSD.
- If you play 4:3 format DVD titles, please change the format to 4:3 in the projector OSD.
- If the image is still stretched, you will also need to adjust the aspect ratio by referring to the following:
- Please setup the display format as 16:9 (wide) aspect ratio type on your DVD player.

Image is too small or too large

- Move the projector closer to or further from the screen.
- Press “Menu” button on the remote control or projector panel, go to “DISPLAY → Format” and try the different settings.

NOTE

- Use of Keystone is not recommended.

Image has slanted sides

- If possible, reposition the projector so that it is horizontally centered on the screen and below the bottom of the screen.
- Press “Keystone” button on the remote control, until the sides are vertical.

Image is reversed

- Select “SETUP → Projection” from the OSD and adjust the projection direction.

The projector stops responding to all controls

- If possible, turn off the projector, then unplug the power cord and wait at least 60 seconds before reconnecting power.
- Check that “Keypad Lock” is not activated by trying to control the projector with the remote control.

Lamp burns out or makes a popping sound

- When the lamp reaches its end of life, it will burn out and may make a loud popping sound. If this happens, the projector will not turn on until the lamp module has been replaced. To replace the lamp, follow the procedures in the “Replacing the Lamp” section on pages 57-58.

LED lighting message

Message	POWER LED	Temp LED	Lamp LED 1	Lamp LED 2
	(Red/Blue)	(Red)	(Amber)	(Amber)
Standby State (Input power cord & Switch on)	Flashing Red	○	○	○
Power on (Warm-ing)	Flashing Blue	○	○	○
Lamp lighting	Blue	○	○	○
Power off (Cooling)	Flashing Blue	○	○	○
Error (Lamp 1 fail)	Flashing Red	○	☼	○
Error (Lamp 2 fail)	Flashing Red	○	○	☼
Error (Fan fail)	Flashing Red	Flashing	○	○
Error (Over Temp.)	Flashing Red	☼	○	○
Error (Lens shift)	Flashing Red	○	☼	☼

NOTE

Steady light ⇨ ☼

No light ⇨ ○

On Screen Messages

- Temperature warning:

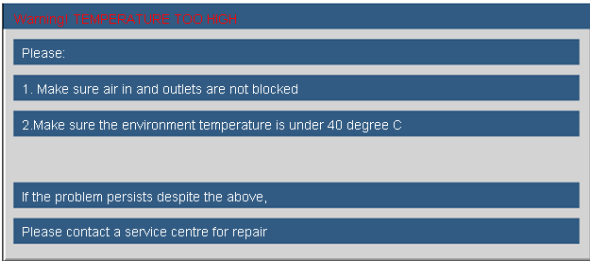

- Fan failed:

- Lamp warning:

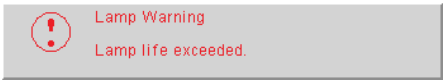

- Out of display range:

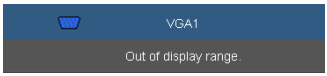

If the remote control does not work

- Check the operating angle of the remote control is within ±15° both horizontally and vertically of one of the IR receivers on the projector.
- Make sure there are not any obstructions between the remote control and the projector. Move to within 7 m (±0°) of the projector.
- Make sure the batteries are inserted correctly.
- Replace batteries if they are exhausted.
- Ensure that you have set your remote to the correct IR code set (see page 47).

Replacing the lamp

The projector automatically detects the lamp life. When the lamp life is nearing the end of use, you will receive a warning message.

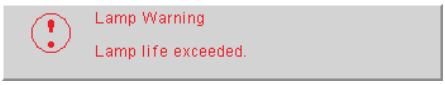

When you see this message, please contact your local reseller or service center to change the lamp as soon as possible. Make sure the projector has been cooled down for at least 30 minutes before changing the lamp.

CAUTION!

HIGH PRESSURE LAMP MAY EXPLODE IF IMPROPERLY HANDED. REFER TO LAMP REPLACEMENT INSTRUCTIONS.

ATTENTION:

Les lampes à haute pression peuvent exploser si elles sont mal utilisées.

Confier l'entretien à une personne qualifiée.

Warning: If ceiling mounted, please use caution when opening the lamp access panel. It is recommended to wear safety glasses if changing the bulb when ceiling mounted. “Caution must be used to prevent any loose parts from falling out of projector.”

Warning: Lamp compartment may be hot! Allow it to cool down before changing the lamp!

Warning: To reduce the risk of personal injury, do not drop the lamp module or touch the lamp bulb. The bulb may shatter and cause injury if it is dropped.

- The screws on the lamp cover and the lamp cannot be removed.
- The projector cannot be turned on if the lamp cover has not been placed back on the projector.
- Do not touch the glass area of the lamp. Hand oil can cause the lamp to shatter. Use a dry cloth to clean the lamp module if it was accidentally touched.

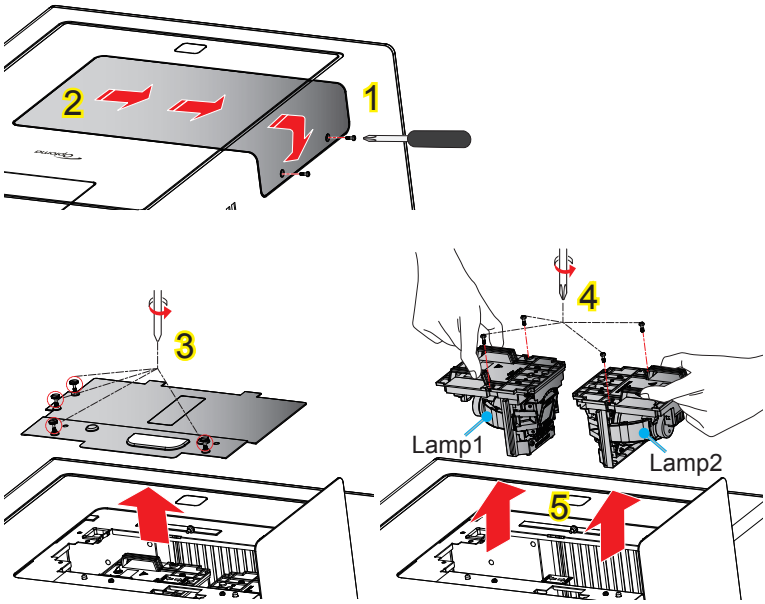

Lamp Replacement Procedure:

1. Switch off the power to the projector by pressing the "⏻" button.
2. Allow the projector to cool down for at least 30 minutes.
3. Disconnect the power cord.
4. Unscrew the two screws on the lamp door. 1
5. Slide the lamp door sideways, then hook it round the bottom of the projector. 2
6. Unscrew the four screws on the lamp cover. 3
7. Unscrew the two screws on the lamp housing. 4
8. Lift up the lamp handle and remove the lamp module slowly and carefully. 5

To replace the lamp module, reverse the previous steps.

9. Turn on the projector and use "Lamp Reset" after the lamp module is replaced.

Lamp Reset: (i) Press "Menu" → (ii) Select "OPTION" → (iii) Select "Lamp Settings" → (iv) Select "Lamp 1 Reset" or "Lamp 2 Reset" → (v) Select "Yes".

Compatibility Modes

Computer Compatibility (PC)

Mode	Resolution	V-Sync (Hz)		H-Sync (KHz)	
		Analog	Digital	Analog	Digital
VGA	640 × 350	70	70	31.50	31.50
VGA	640 × 400	85	85	37.90	37.90
VGA	640 × 480	60	60	31.50	31.50
VGA	640 × 480	67	67	-	-
VGA	640 × 480	72	72	37.90	37.90
VGA	640 × 480	75	75	37.50	37.50
VGA	640 × 480	85	85	43.30	43.30
VGA	720 × 400	70	70	31.50	31.50
VGA	720 × 400	85	85	37.90	37.90
VGA	720 × 576	50	50	-	-
SVGA	800 × 600	56	56	35.20	35.20
SVGA	800 × 600	60	60	37.90	37.90
SVGA	800 × 600	72	72	48.10	48.10
SVGA	800 × 600	75	75	46.90	46.90
SVGA	800 × 600	85	85	53.70	53.70
SVGA	832 × 624	75	75	-	-
XGA	1024 × 768	60	60	48.40	48.40
XGA	1024 × 768	70	70	56.50	56.50
XGA	1024 × 768	75	75	60.00	60.00
XGA	1024 × 768	85	85	68.70	68.70
	1152 × 864	75	75	-	-
WXGA	1280 × 768	60	60	47.40	47.40
WXGA	1280 × 768	75	75	-	-
WXGA	1280 × 768	85	85	-	-
WXGA	1280 × 800	60	60	-	-
SXGA	1280 × 1024	60	60	64.00	64.00
SXGA	1280 × 1024	75	75	80.00	80.00
SXGA	1280 × 1024	85	85	91.10	91.10

Note

- For widescreen resolution (WXGA), the compatibility support is dependent on Notebook/PC models.
- Please note that using resolutions other than native 1920 x 1200 (WUXGA model) may result in some loss of image clarity.

Mode	Resolution	V-Sync (Hz)		H-Sync (KHz)	
		Analog	Digital	Analog	Digital
SXGA+	1400 × 1050	60	60	-	-
UXGA	1600 × 1200	60	60	75.00	75.00
WUXGA (#1)	1920 × 1200	60	60	-	-
HD	1280 × 720	50	50	-	-
HD	1280 × 720	60	60	-	-
HD	1920 × 1080	24	24	-	-
HD	1920 × 1080	50	50	-	-
HD	1920 × 1080	60	60	-	-
	1920 × 1080i	50/60		-	-
	1920 × 1080p	24/25/30/50/60		-	-
	1280 × 720p	50/60		-	-
	720 × 576i	50	50	-	-
	720 × 576p	50	50	-	-
	720 × 480i	60	60	-	-
	720 × 480p	60	60	-	-

NOTE

- (#1) Only support RB (reduced blanking).

NOTE

- Input 1920x1080, the black bar (120 pixel height) will be on image bottom side.

Video Compatibility

NTSC	M (3.58MHz), 4.43 MHz
PAL	B, D, G, H, I, M, N
SECAM	B, D, G, K, K1, L
SDTV	480i/p@60Hz, 576i/p@50Hz
HDTV	720p@50Hz/60Hz, 1080i@50Hz/60Hz, 1080p@24Hz/50Hz/60Hz

Computer Compatibility (MAC)

Resolution	Hz	Macbook		Macbook Pro		Power Mac G5		Power Mac G4	
		Digital	Analog	Digital	Analog	Digital	Analog	Digital	Analog
800 × 600	60	V	V	V	V	X	X	V	X
800 × 600	72	V	V	V	V	X	V	V	V
800 × 600	75	V	V	V	V	X	V	V	V
800 × 600	85	V	V	X	V	X	V	V	V
1024 × 768	60	V	V	V	V	X	V	V	V
1024 × 768	70	V	V	V	V	X	V	V	V
1024 × 768	75	V	V	V	V	X	V	V	V
1024 × 768	85	V	V	V	V	X	V	V	V
1280 × 720	60	V	V	V	V	X	V	V	V
1280 × 768	60	V	V	V	V	X	X	X	V
1280 × 768	75	X	V	X	V	X	V	V	V
1280 × 768	85	X	V	X	V	X	X	X	V
1280 × 800	60	X	V	X	V	X	V	V	V
1280 × 1024	60	V	X	X	V	X	V	V	V
1280 × 1024	75	V	X	X	V	X	V	V	X
1920 × 1080	60	V	X	X	V	X	V	V	V
1920 × 1200 (#1)	60	V	X	X	V	X	V	V	V

❖ (#1) Only support RB (reduced blanking)

RS232 Commands and Protocol Function List

RS232 Pin Assignments

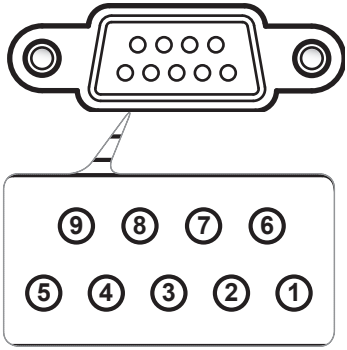

Pin no.	Spec.
1	N/A
2	RXD
3	TXD
4	N/A
5	GND
6	N/A
7	N/A
8	N/A
9	N/A

NOTE

- RS232 shell is grounded.

RS232 Protocol Function List

1. There is a <CR> after all ASCII commands.
2. 0D is the HEX code for <CR> in ASCII code.

Baud Rate : 9600
Data Bits: 8
Parity: None
Stop Bits: 1
Flow Control : None
UART16550 FIFO: Disable
Projector Return (Pass): P
Projector Return (Fail): F

XX=00-99, projector's ID,
XX=00 is for all projectors

SEND to projector

232 ASCII Code	HEX Code	Function		Description
~XX00 1	7E 30 30 30 30 20 31 0D	Power ON		
~XX00 0	7E 30 30 30 30 20 30 0D	Power OFF		
~XX00 1 ~nnnn	7E 30 30 30 30 20 31 20 a 0D	Power ON with Password		~nnnn = ~0000 (a=7E 30 30 30 30) - ~9999(a=7E 39 39 39 39)
~XX01 1	7E 30 30 30 31 20 31 0D	Resync		
~XX02 1	7E 30 30 30 32 20 31 0D	AV Mute	On	
~XX02 0	7E 30 30 30 32 20 30 0D		Off	
~XX04 1	7E 30 30 30 34 20 31 0D	Freeze		
~XX04 0	7E 30 30 30 34 20 30 0D	Unfreeze		
~XX05 1	7E 30 30 30 35 20 31 0D	Zoom Plus		
~XX06 1	7E 30 30 30 36 20 31 0D	Zoom Minus		
~XX07 1	7E 30 30 30 37 20 31 0D	Up (Pan under zoom)		
~XX08 1	7E 30 30 30 38 20 31 0D	Down (Pan under zoom)		
~XX09 1	7E 30 30 30 39 20 31 0D	Left (Pan under zoom)		
~XX10 1	7E 30 30 31 30 20 31 0D	Right (Pan under zoom)		
~XX12 1	7E 30 30 31 32 20 31 0D	Direct Source Command	HDMI	
~XX12 4	7E 30 30 31 32 20 34 0D		BNC	
~XX12 5	7E 30 30 31 32 20 35 0D		VGA 1	
~XX12 6	7E 30 30 31 32 20 36 0D		VGA 2	
~XX12 9	7E 30 30 31 32 20 39 0D		S-Video	
~XX12 10	7E 30 30 31 32 20 31 30 0D		Video	
~XX12 14	7E 30 30 31 32 20 31 34 0D		Component RCA	
~XX12 15	7E 30 30 31 32 20 31 35 0D		HDMI 2	
~XX20 1	7E 30 30 32 30 20 31 0D	Display Mode	Presentation	
~XX20 2	7E 30 30 32 30 20 32 0D		Bright	
~XX20 3	7E 30 30 32 30 20 33 0D		Movie	
~XX20 4	7E 30 30 32 30 20 34 0D		sRGB	
~XX20 5	7E 30 30 32 30 20 35 0D		User1	
~XX20 6	7E 30 30 32 30 20 36 0D		User2	
~XX20 7	7E 30 30 32 30 20 37 0D		Blackboard	
~XX20 8	7E 30 30 32 30 20 38 0D		Classroom	
~XX21 n	7E 30 30 32 31 20 a 0D	Brightness		n = -50 (a=30) ~ 50 (a=31 30 30)
~XX22 n	7E 30 30 32 32 20 a 0D	Contrast		n = -50 (a=30) ~ 50 (a=31 30 30)
~XX23 n	7E 30 30 32 33 20 a 0D	Sharpness		n = 1 (a=30) ~ 15 (a=33 31)
~XX24 n	7E 30 30 32 34 20 a 0D	Color	Red Gain	n = -50 (a=2D 35 30) ~ 50 (a=35 30)
~XX25 n	7E 30 30 32 35 20 a 0D		Green Gain	n = -50 (a=2D 35 30) ~ 50 (a=35 30)
~XX26 n	7E 30 30 32 36 20 a 0D		Blue Gain	n = -50 (a=2D 35 30) ~ 50 (a=35 30)
~XX27 n	7E 30 30 32 37 20 a 0D		Red Bias	n = -50 (a=2D 35 30) ~ 50 (a=35 30)
~XX28 n	7E 30 30 32 38 20 a 0D		Green Bias	n = -50 (a=2D 35 30) ~ 50 (a=35 30)
~XX29 n	7E 30 30 32 39 20 a 0D		Blue Bias	n = -50 (a=2D 35 30) ~ 50 (a=35 30)
~XX30 n	7E 30 30 33 30 20 a 0D		Cyan	n = -50 (a=2D 35 30) ~ 50 (a=35 30)
~XX31 n	7E 30 30 33 31 20 a 0D		Yellow	n = -50 (a=2D 35 30) ~ 50 (a=35 30)
~XX32 n	7E 30 30 33 32 20 a 0D		Magenta	n = -50 (a=2D 35 30) ~ 50 (a=35 30)
~XX33 1	7E 30 30 33 33 20 31 0D		Reset	
~XX34 n	7E 30 30 33 34 20 a 0D	BrilliantColor™		n = 0 (a=30) ~ 10 (a=31 30)
~XX35 1	7E 30 30 33 35 20 31 0D	Degamma	Film	
~XX35 2	7E 30 30 33 35 20 32 0D		Video	
~XX35 3	7E 30 30 33 35 20 33 0D		Graphics	
~XX35 4	7E 30 30 33 35 20 34 0D		PC	
~XX36 1	7E 30 30 33 36 20 31 0D	Color Temp.	Warm	
~XX36 2	7E 30 30 33 36 20 32 0D		Medium	
~XX36 3	7E 30 30 33 36 20 33 0D		Cold	
~XX37 1	7E 30 30 33 37 20 31 0D	Color Space	Auto	* HDMI w/o Color Space item
~XX37 2	7E 30 30 33 37 20 32 0D		RGB	
~XX37 3	7E 30 30 33 37 20 33 0D		YUV	
~XX195 1	7E 30 30 37 31 20 31 0D	Image AI	On	
~XX195 0	7E 30 30 37 31 20 30 0D		Off	
~XX44 n	7E 30 30 34 34 20 a 0D	Tint		n = 0 (a=30) ~ 100 (a=31 30 30)
~XX45 n	7E 30 30 34 35 20 a 0D	Color (Saturation)		n = 0 (a=30) ~ 100 (a=31 30 30)

~XX60 1	7E 30 30 36 30 20 31 0D	Format	4:3	
~XX60 2	7E 30 30 36 30 20 32 0D		16:9	
~XX60 3	7E 30 30 36 30 20 33 0D		16:10	
~XX60 5	7E 30 30 36 30 20 35 0D		LBX	
~XX60 6	7E 30 30 36 30 20 36 0D		Native	
~XX60 7	7E 30 30 36 30 20 37 0D		AUTO	
~XX61 n	7E 30 30 36 31 20 a 0D	Overscan		n = 0 (a=30) ~ 10(a=31 30)
~XX62 n	7E 30 30 36 32 20 a 0D	Zoom		n = -5 (a=2D 35) ~ 25 (a=32 35)
~XX63 n	7E 30 30 36 33 20 a 0D	H Image Shift		n = -50 (a=2D 35 30) ~ +50 (a=35 30)
~XX64 n	7E 30 30 36 34 20 a 0D	V Image Shift		n = -50 (a=2D 35 30) ~ +50 (a=35 30)
~XX66 n	7E 30 30 36 36 20 a 0D	V Keystone		n = -40 (a=2D 34 30) ~ 40 (a=34 30)
~XX69 1	7E 30 30 36 39 20 31 0D	Auto Keystone	On	
~XX69 0	7E 30 30 36 39 20 30 0D	Auto Keystone	Off	
~XX70 1	7E 30 30 37 30 20 31 0D	Language	English	
~XX70 2	7E 30 30 37 30 20 32 0D		German	
~XX70 3	7E 30 30 37 30 20 33 0D		French	
~XX70 4	7E 30 30 37 30 20 34 0D		Italian	
~XX70 5	7E 30 30 37 30 20 35 0D		Spanish	
~XX70 6	7E 30 30 37 30 20 36 0D		Portuguese	
~XX70 7	7E 30 30 37 30 20 37 0D		Polish	
~XX70 8	7E 30 30 37 30 20 38 0D		Dutch	
~XX70 9	7E 30 30 37 30 20 39 0D		Swedish	
~XX70 10	7E 30 30 37 30 20 31 30 0D		Norwegian/Danish	
~XX70 11	7E 30 30 37 30 20 31 31 0D		Finnish	
~XX70 12	7E 30 30 37 30 20 31 32 0D		Greek	
~XX70 13	7E 30 30 37 30 20 31 33 0D		Traditional Chinese	
~XX70 14	7E 30 30 37 30 20 31 34 0D		Simplified Chinese	
~XX70 15	7E 30 30 37 30 20 31 35 0D		Japanese	
~XX70 16	7E 30 30 37 30 20 31 36 0D		Korean	
~XX70 17	7E 30 30 37 30 20 31 37 0D		Russian	
~XX70 18	7E 30 30 37 30 20 31 38 0D		Hungarian	
~XX70 19	7E 30 30 37 30 20 31 39 0D		Czechoslovak	
~XX70 20	7E 30 30 37 30 20 32 30 0D		Arabic	
~XX70 21	7E 30 30 37 30 20 32 31 0D		Thai	
~XX70 22	7E 30 30 37 30 20 32 32 0D		Turkish	
~XX70 23	7E 30 30 37 30 20 32 33 0D		Farsi	
~XX71 1	7E 30 30 37 31 20 31 0D	Projection	Front-Desktop	
~XX71 2	7E 30 30 37 31 20 32 0D		Rear-Desktop	
~XX71 3	7E 30 30 37 31 20 33 0D		Front-Ceiling	
~XX71 4	7E 30 30 37 31 20 34 0D		Rear-Ceiling	
~XX72 1	7E 30 30 37 32 20 31 0D	Menu Location	Top Left	
~XX72 2	7E 30 30 37 32 20 32 0D		Top Right	
~XX72 3	7E 30 30 37 32 20 33 0D		Centre	
~XX72 4	7E 30 30 37 32 20 34 0D		Bottom Left	
~XX72 5	7E 30 30 37 32 20 35 0D		Bottom Right	
~XX90 1	7E 30 30 39 31 20 31 0D	Screen Type	16:10	
~XX90 0	7E 30 30 39 31 20 30 0D		16:9	
~XX91 1	7E 30 30 39 31 20 31 0D	Signal	Automatic	On
~XX91 0	7E 30 30 39 31 20 30 0D		Automatic	Off
~XX73 n	7E 30 30 37 33 20 a 0D		Frequency	n = -5 (a=2D 35) ~ 5 (a=35) By signal
~XX74 n	7E 30 30 37 34 20 a 0D		Phase	n = 0 (a=30) ~ 31 (a=33 31) By signal
~XX75 n	7E 30 30 37 35 20 a 0D		H. Position	n = -5 (a=2D 35) ~ 5 (a=35) By timing
~XX76 n	7E 30 30 37 36 20 a 0D		V. Position	n = -5 (a=2D 35) ~ 5 (a=35) By timing
~XX77 n	7E 30 30 37 37 20 aabbcc 0D	Security	Security Timer	Month/Day/Hour n = mm/dd/hh mm = 00 (aa=30 30) ~ 12 (aa=31 32) dd = 00 (bb=30 30) ~ 30 (bb=33 30) hh = 00 (cc=30 30) ~ 24 (cc=32 34)
~XX78 1	7E 30 30 37 38 20 31 0D		Security	On
~XX78 0	7E 30 30 37 38 20 32 0D			Off (0/2 for backward compatible)
~XX79 n	7E 30 30 37 39 20 a 0D	Projector ID		n = 00 (a=30 30) ~ 99 (a=39 39)
~XX80 1	7E 30 30 38 30 20 31 0D	Mute	On	
~XX80 0	7E 30 30 38 30 20 30 0D		Off	
~XX81 n	7E 30 30 38 31 20 a 0D	Volume		n = 0 (a=30) ~ 10 (a=31 30)
~XX82 1	7E 30 30 38 32 20 31 0D	Logo	Optoma	
~XX82 2	7E 30 30 38 32 20 32 0D		User	
~XX83 1	7E 30 30 38 33 20 31 0D	Logo Capture		
~XX88 0	7E 30 30 38 38 20 30 0D	Closed Captioning	Off	
~XX88 1	7E 30 30 38 38 20 31 0D		cc1	
~XX88 2	7E 30 30 38 38 20 32 0D		cc2	
~XX100 1	7E 30 30 31 30 30 20 31 0D	Source Lock	On	
~XX100 0	7E 30 30 31 30 30 20 30 0D		Off	
~XX100 3	7E 30 30 31 30 30 20 33 0D	Next Source		
~XX101 1	7E 30 30 31 30 31 20 31 0D	High Altitude	On	
~XX101 0	7E 30 30 31 30 31 20 30 0D		Off	
~XX102 1	7E 30 30 31 30 32 20 31 0D	Information Hide	On	
~XX102 0	7E 30 30 31 30 32 20 30 0D		Off	
~XX103 1	7E 30 30 31 30 33 20 31 0D	Keypad Lock	On	
~XX103 0	7E 30 30 31 30 33 20 30 0D		Off	
~XX104 1	7E 30 30 31 30 34 20 31 0D	Background Color	Blue	
~XX104 2	7E 30 30 31 30 34 20 32 0D		Black	
~XX104 3	7E 30 30 31 30 34 20 33 0D		Red	
~XX104 4	7E 30 30 31 30 34 20 34 0D		Green	
~XX104 5	7E 30 30 31 30 34 20 35 0D		White	

~XX105 1	7E 30 30 31 30 35 20 31 0D	Advanced	Direct Power On	On
~XX105 0	7E 30 30 31 30 35 20 30 0D			Off
~XX106 n	7E 30 30 31 30 36 20 a 0D		Auto Power Off (min)	n = 0 (a=30) ~ 180 (a=31 38 30) , step=1
~XX107 n	7E 30 30 31 30 37 20 a 0D		Sleep Timer (min)	n = 0 (a=30) ~ 995 (a=39 39 35) , step=5
~XX114 1	7E 30 30 31 31 34 20 31 0D		Power Mode(Standby)	Eco.(<=1W)
~XX114 0	7E 30 30 31 31 34 20 30 0D			Active
~XX109 1	7E 30 30 31 30 39 20 31 0D		Lamp Reminder	On
~XX109 0	7E 30 30 31 30 39 20 30 0D			Off
~XX110 1	7E 30 30 31 31 30 20 31 0D		Brightness Mode	Bright
~XX110 0	7E 30 30 31 31 30 20 30 0D			STD
~XX111 1	7E 30 30 31 31 31 20 31 0D		Lamp Reset	Yes
~XX111 0	7E 30 30 31 31 31 20 30 0D			No
~XX112 1	7E 30 30 31 31 32 20 31 0D	Reset		Yes
~XX210 n	7E 30 30 32 30 30 20 n 0D	Display message on the OSD		n: 1-30 characters

SEND from projector automatically

232 ASCII Code	HEX Code	Function	Projector Return	Description
		System status	INFOn	n : 0/1/2/3/4/6/7/8 = Standby/Warming/Cooling/Out of Range/ Lamp fail/Fan Lock/Over Temperature/Lamp Hours Running Out

READ from projector

232 ASCII Code	HEX Code	Function	Projector Return	Description
~XX121 1	7E 30 30 31 32 31 20 31 0D	Input Source	OKn	n : 0/1/2/3/4/5 /6/7= None / VGA1 / VGA2 / S-Video / Video / HDMI, HDMI2, BNC
~XX122 1	7E 30 30 31 32 32 20 31 0D	Sofware Version	OKdddd	dddd: FW version
~XX123 1	7E 30 30 31 32 33 20 31 0D	Display Mode	OKn	n : 0/1/2/3/4/5/6/7/8 = None/Presentation/Bright/Movie/sRGB/ User/Blackboard/Classroom/User2
~XX124 1	7E 30 30 31 32 34 20 31 0D	Power State	OKn	n : 0/1 = Off/On
~XX125 1	7E 30 30 31 32 35 20 31 0D	Brightness	OKn	
~XX126 1	7E 30 30 31 32 36 20 31 0D	Contrast	OKn	
~XX127 1	7E 30 30 31 32 37 20 31 0D	Aspect Ratio	OKn	n: 0/1/2/3/4 = 4:3 / 16:9 or 16:10 * / LBX / Native / AUTO * 16:9 or 16:10 depend on Screen Type setting
~XX128 1	7E 30 30 31 32 38 20 31 0D	Color Temperature	OKn	n : 0/1/2 = Warm/Medium/Cold
~XX129 1	7E 30 30 31 32 39 20 31 0D	Projection Mode	OKn	n : 0/1/2/3 = Front-Desktop/Rear-Desktop/Front-Ceiling/ Rear-Ceiling
~XX150 1	7E 30 30 31 35 30 20 31 0D	Information	OKabbbbccdddde	a : 0/1 = Off/On bbbb: LampHour cc: source 00/01/02/03/04/05/06/07 = None/VGA1/VGA2/ S-Video/Video/HDMI, HDMI2, BNC dddd: FW version e : Display mode 0/1/2/3/4/5/6/7/8 = None/Presentation/Bright/Movie/sRGB/User/ Blackboard/Classroom/User2
~XX151 1	7E 30 30 31 35 31 20 31 0D	Model name	OKn	n: 10 = EH7500
~XX108 1	7E 30 30 31 30 38 20 31 0D	Lamp Hours	OKbbbb	bbbb: LampHour
~XX108 2	7E 30 30 31 30 38 20 31 0D	Cumulative Lamp Hours	OKbbbbb	bbbbb: (5 digits) Total Lamp Hours

Ceiling Mount Installation

1. To prevent damage to your projector, please use the Optoma ceiling mount.
2. If you wish to use a third party ceiling mount kit, please ensure the screws used to attach a mount to the projector meet the following specifications:
   - Screw type: M8*4
   - Recommended screw length: 10mm

Note

- Please note that damage resulting from incorrect installation will void the warranty.

Note

Warning:

1. If you buy a ceiling mount from another company, please be sure to use the correct screw size. Screw size will vary depending on the thickness of the mounting plate.
2. Be sure to keep at least 10 cm gap between the ceiling and the bottom of the projector.
3. Avoid installing the projector near a heat source.

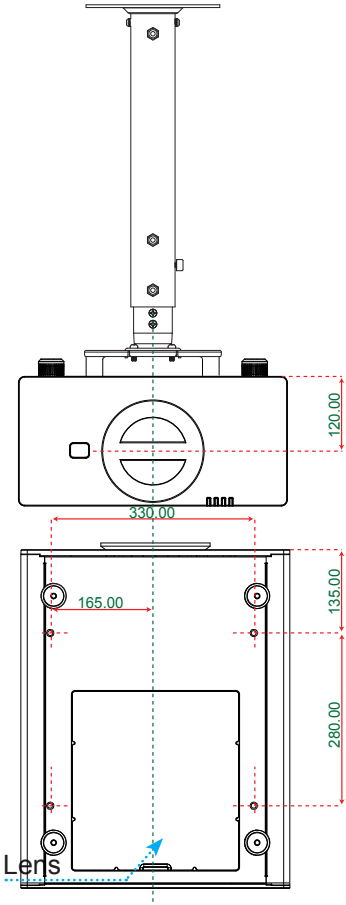

Unit: mm

Optoma Global Offices

For service or support please contact your local office.

USA

3178 Laurelview Ct.
Fremont, CA 94538, USA
www.optomausa.com

888-289-6786
510-897-8601
services@optoma.com

Canada

2420 Meadowpine Blvd., Suite #105
Mississauga, ON, L5N 6S2, Canada
www.optoma.ca

888-289-6786
510-897-8601
services@optoma.com

Europe

42 Caxton Way, The Watford Business Park
Watford, Hertfordshire,
WD18 8QZ, UK
www.optoma.eu
Service Tel : +44 (0)1923 691865

+44 (0) 1923 691 800
+44 (0) 1923 691 888
service@tsc-europe.com

France

Bâtiment E
81-83 avenue Edouard Vaillant
92100 Boulogne Billancourt, France

+33 1 41 46 12 20
+33 1 41 46 94 35
savoptoma@optoma.fr

Spain

C/ José Hierro,36 Of. 1C
28522 Rivas VaciaMadrid,
Spain

+34 91 499 06 06
+34 91 670 08 32

Deutschland

Werftstrasse 25
D40549 Düsseldorf,
Germany

+49 (0) 211 506 6670
+49 (0) 211 506 66799
info@optoma.de

Scandinavia

Lerpeveien 25
3040 Drammen
Norway

+47 32 98 89 90
+47 32 98 89 99
info@optoma.no

PO.BOX 9515
3038 Drammen
Norway

Latin America

3178 Laurelview Ct.
Fremont, CA 94538, USA
www.optoma.com.br

888-289-6786
510-897-8601
www.optoma.com.mx

Korea

WOOMI TECH.CO.,LTD.
4F,Minu Bldg.33-14, Kangnam-Ku,
seoul,135-815, KOREA

+82+2+34430004
+82+2+34430005

Japan

東京都足立区綾瀬3-25-18
株式会社オーエスエム
サポートセンター:0120-46-5040

info@osscreen.com
www.os-worldwide.com

Taiwan

5F., No. 108, Minchiuan Rd.
Shindian City,
Taipei Taiwan 231, R.O.C.
www.optoma.com.tw

+886-2-2218-2360
+886-2-2218-2313
services@optoma.com.tw
asia.optoma.com

Hong Kong

Unit A, 27/F Dragon Centre,
79 Wing Hong Street,
Cheung Sha Wan,
Kowloon, Hong Kong

+852-2396-8968
+852-2370-1222
www.optoma.com.hk

China

5F, No. 1205, Kaixuan Rd.,
Changning District
Shanghai, 200052, China

+86-21-62947376
+86-21-62947375
www.optoma.com.cn

Regulation & Safety Notices

This appendix lists the general notices of your projector.

FCC notice

This device has been tested and found to comply with the limits for a Class A digital device pursuant to Part 15 of the FCC rules. These limits are designed to provide reasonable protection against harmful interference in a residential installation. This device generates, uses and can radiate radio frequency energy and, if not installed and used in accordance with the instructions, may cause harmful interference to radio communications.

However, there is no guarantee that interference will not occur in a particular installation. If this device does cause harmful interference to radio or television reception, which can be determined by turning the device off and on, the user is encouraged to try to correct the interference by one or more of the following measures:

- Reorient or relocate the receiving antenna.
- Increase the separation between the device and receiver.
- Connect the device into an outlet on a circuit different from that to which the receiver is connected.
- Consult the dealer or an experienced radio/television technician for help.

Notice: Shielded cables

All connections to other computing devices must be made using shielded cables to maintain compliance with FCC regulations.

Caution

Changes or modifications not expressly approved by the manufacturer could void the user's authority, which is granted by the Federal Communications Commission, to operate this projector.

Operation conditions

This device complies with Part 15 of the FCC Rules. Operation is subject to the following two conditions:

1. This device may not cause harmful interference and
2. This device must accept any interference received, including interference that may cause undesired operation.

Notice: Canadian users

This Class A digital apparatus complies with Canadian ICES-003.

Remarque à l'intention des utilisateurs canadiens

Cet appareil numerique de la classe A est conforme a la norme NMB-003 du Canada.

Declaration of Conformity for EU countries

- EMC Directive 2004/108/EC (including amendments)
- Low Voltage Directive 2006/95/EC
- R & TTE Directive 1999/5/EC (if product has RF function)

Disposal instructions

Do not throw this electronic device into the trash when discarding. To minimize pollution and ensure utmost protection of the global environment, please recycle it.