USA's primary source for projector lamps
myprojectorlamps

PROJECTOR OWNER'S MANUAL

Optoma

EH400+ / W400+ / X400

Need a replacement lamp for this projector?

www.myprojectorlamps.com

Original manufacturer manual, provided unmodified as a courtesy of MyProjectorLamps.com.
All trademarks belong to their respective owners.

Optoma

DLP® Projector

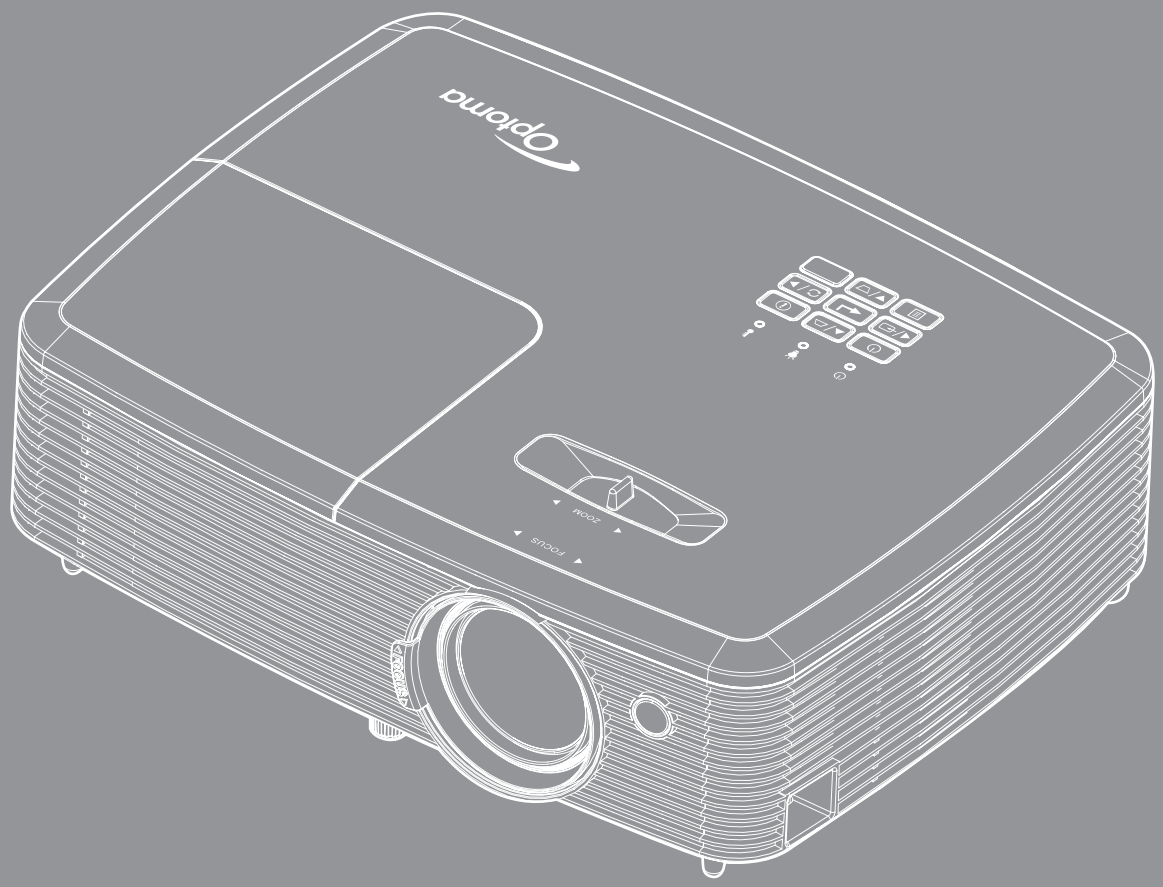

User manual

MHL™ HDMI™ HIGH DEFINITION MULTIMEDIA INTERFACE PICTURE BY DLP® TEXAS INSTRUMENTS

TABLE OF CONTENTS

SAFETY 4

Important Safety Instruction 4
3D Safety Information 5
Copyright 6
Disclaimer 6
Trademark Recognition 6
FCC 7
Declaration of Conformity for EU countries 7
WEEE 7

INTRODUCTION 8

Package Overview 8
Standard accessories 8
Optional accessories 8
Product Overview 9
Connections 10
Keypad 12
Remote control 1 13
Remote control 2 14

SETUP AND INSTALLATION 15

Installing the projector 15
Adjusting the projector image 19

USING THE PROJECTOR 22

Powering on / off the projector 22
Selecting an input source 23
Menu navigation and features 24
OSD Menu tree (Type 1) 25
OSD Menu tree (Type 2) 33
Display image settings menu 42
Display 3D menu 44
Display aspect ratio menu 44
Display edge mask menu 48
Display zoom menu 48
Display image shift menu 48
Display keystone menu 48
Audio mute menu 49
Audio volume menu 49
Audio audio input menu (Type 2) 49
Setup projection menu 49
Setup screen type menu 49
Setup lamp settings menu 49

Setup filter settings menu 50
Setup power settings menu 50
Setup security menu 51
Setup HDMI link settings menu 51
Setup test pattern menu 52
Setup remote settings menu 52
Setup projector ID menu 52
Setup options menu 52
Setup reset menu 53
Network LAN menu 54
Network control menu 55
Setup network control settings menu 56
Info menu (Type 1) 61
Info menu (Type 2) 61

MAINTENANCE 62

Replacing the lamp 62
Installing and cleaning the dust filter 64

ADDITIONAL INFORMATION 65

Compatible resolutions 65
Image size and projection distance 68
Projector dimensions and ceiling mount installation 72
IR remote control 1 codes 73
IR remote control 2 codes 75
Troubleshooting 77
Warning indicators 78
Specifications 81
Optoma global offices 82

SAFETY

	The lightning flash with arrow head within an equilateral triangle is intended to alert the user to the presence of uninsulated "dangerous voltage" within the product's enclosure that may be of sufficient magnitude to constitute a risk of electric shock to persons.
	The exclamation point within an equilateral triangle is intended to alert the user to the presence of important operating and maintenance (servicing) instructions in the literature accompanying the appliance.

Please follow all warnings, precautions and maintenance as recommended in this user's guide.

Important Safety Instruction

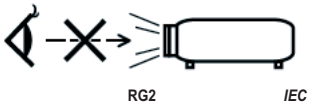

- Do not stare into the beam, RG2.
  As with any bright source, do not stare into the direct beam, RG2 IEC 62471-5:2015.
- Do not block any ventilation openings. To ensure reliable operation of the projector and to protect from over heating, it is recommended to install the projector in a location that does not block ventilation. As an example, do not place the projector on a crowded coffee table, sofa, bed, etc. Do not put the projector in an enclosure such as a book case or a cabinet that restricts air flow.
- To reduce the risk of fire and/or electric shock, do not expose the projector to rain or moisture. Do not install near heat sources such as radiators, heaters, stoves or any other apparatus such as amplifiers that emits heat.
- Do not let objects or liquids enter the projector. They may touch dangerous voltage points and short out parts that could result in fire or electric shock.
- Do not use under the following conditions:
  - In extremely hot, cold or humid environments.
    (i) Ensure that the ambient room temperature is within 5°C ~ 40°C
    (ii) Relative humidity is 10% ~ 85%
  - In areas susceptible to excessive dust and dirt.
  - Near any appliance generating a strong magnetic field.
  - In direct sunlight.
- Do not use the projector in places where flammable gases or explosives gases may be present in the atmosphere. The lamp inside the projector becomes very hot during operation and the gases may ignite and result in a fire.
- Do not use the unit if it has been physically damaged or abused. Physical damage/abuse would be (but not limited to):
  - Unit has been dropped.
  - Power supply cord or plug has been damaged.
  - Liquid has been spilled on to the projector.
  - Projector has been exposed to rain or moisture.
  - Something has fallen in the projector or something is loose inside.
- Do not place the projector on an unstable surface. The projector may fall over resulting in injury or the projector may become damaged.
- Do not block the light coming out of the projector lens when in operation. The light will heat the object and my melt, cause burns or start a fire.

- Please do not open or disassemble the projector as this may cause electric shock.
- Do not attempt to service the unit yourself. Opening or removing covers may expose you to dangerous voltages or other hazards. Please call Optoma before you send the unit for repair.
- See projector enclosure for safety related markings.
- The unit should only be repaired by appropriate service personnel.
- Only use attachments/accessories specified by the manufacturer.
- Do not look into straight into the projector lens during operation. The bright light may harm your eyes.
- When replacing the lamp, please allow the unit to cool down. Follow instructions as described on pages *62-63*.
- This projector will detect the life of the lamp itself. Please be sure to change the lamp when it shows warning messages.
- Reset the "Lamp Reset" function from the on-screen display "Setup lamp settings" menu after replacing the lamp module.
- When switching the projector off, please ensure the cooling cycle has been completed before disconnecting power. Allow 90 seconds for the projector to cool down.
- When the lamp is approaching to the end of its life time, the message "Lamp life exceeded." will show on the screen. Please contact your local reseller or service center to change the lamp as soon as possible.
- Turn off and unplug the power plug from the AC outlet before cleaning the product.
- Use a soft dry cloth with mild detergent to clean the display housing. Do not use abrasive cleaners, waxes or solvents to clean the unit.
- Disconnect the power plug from AC outlet if the product is not being used for a long period of time.

Note: *When the lamp reaches the end of its life, the projector will not turn back on until the lamp module has been replaced. To replace the lamp, follow the procedures listed under "Replacing the Lamp" section on pages 62-63.*

- *Do not setup the projector in places where it might be subjected to vibration or shock.*
- *Do not touch the lens with bare hands*
- *Remove battery/batteries from remote control before storage. If the battery/batteries are left in the remote for long periods, they may leak.*
- *Do not use or store the projector in places where smoke from oil or cigarettes may be present, as it can adversely affect the quality of the projector performance.*
- *Please follow the correct projector orientation installation as non standard installation may affect the projector performance.*
- *Use a power strip and or surge protector. As power outages and brown-outs can KILL devices.*

3D Safety Information

Please follow all warnings and precautions as recommended before you or your child use the 3D function.

Warning

Children and teenagers may be more susceptible to health issues associated with viewing in 3D and should be closely supervised when viewing these images.

Photosensitive Seizure Warning and Other Health Risks

- Some viewers may experience an epileptic seizure or stroke when exposed to certain flashing images or lights contained in certain Projector pictures or video games. If you suffer from, or have a family history of epilepsy or strokes, please consult with a medical specialist before using the 3D function.
- Even those without a personal or family history of epilepsy or stroke may have an undiagnosed condition that can cause photosensitive epileptic seizures.
- Pregnant women, the elderly, sufferers of serious medical conditions, those who are sleep deprived or under the influence of alcohol should avoid utilizing the unit's 3D functionality.

- If you experience any of the following symptoms, stop viewing 3D pictures immediately and consult a medical specialist: (1) altered vision; (2) light-headedness; (3) dizziness; (4) involuntary movements such as eye or muscle twitching; (5) confusion; (6) nausea; (7) loss of awareness; (8) convulsions; (9) cramps; and/ or (10) disorientation. Children and teenagers may be more likely than adults to experience these symptoms. Parents should monitor their children and ask whether they are experiencing these symptoms.
- Watching 3D projection may also cause motion sickness, perceptual after effects, disorientation, eye strain and decreased postural stability. It is recommended that users take frequent breaks to lessen the potential of these effects. If your eyes show signs of fatigue or dryness or if you have any of the above symptoms, immediately discontinue use of this device and do not resume using it for at least thirty minutes after the symptoms have subsided.
- Watching 3D projection while sitting too close to the screen for an extended period of time may damage your eyesight. The ideal viewing distance should be at least three times the screen height. It is recommended that the viewer's eyes are level with the screen.
- Watching 3D projection while wearing 3D glasses for an extended period of time may cause a headache or fatigue. If you experience a headache, fatigue or dizziness, stop viewing the 3D projection and rest.
- Do not use the 3D glasses for any other purpose than for watching 3D projection.
- Wearing the 3D glasses for any other purpose (as general spectacles, sunglasses, protective goggles, etc.) may be physically harmful to you and may weaken your eyesight.
- Viewing in 3D projection may cause disorientation for some viewers. Accordingly, DO NOT place your 3D PROJECTOR near open stairwells, cables, balconies, or other objects that can be tripped over, run into, knocked down, broken or fallen over.

Copyright

This publication, including all photographs, illustrations and software, is protected under international copyright laws, with all rights reserved. Neither this manual, nor any of the material contained herein, may be reproduced without written consent of the author.

© Copyright 2016

Disclaimer

The information in this document is subject to change without notice. The manufacturer makes no representations or warranties with respect to the contents hereof and specifically disclaims any implied warranties of merchantability or fitness for any particular purpose. The manufacturer reserves the right to revise this publication and to make changes from time to time in the content hereof without obligation of the manufacturer to notify any person of such revision or changes.

Trademark Recognition

Kensington is a U.S. registered trademark of ACCO Brand Corporation with issued registrations and pending applications in other countries throughout the world.

HDMI, the HDMI Logo, and High-Definition Multimedia Interface are trademarks or registered trademarks of HDMI Licensing LLC in the United States and other countries.

DLP®, DLP Link and the DLP logo are registered trademarks of Texas Instruments and BrilliantColor™ is a trademark of Texas Instruments.

All other product names used in this manual are the properties of their respective owners and are Acknowledged.

DARBEE is a trademark by Darbee Products, Inc.

MHL, Mobile High-Definition Link and the MHL Logo are trademarks or registered trademarks of MHL Licensing, LLC.

FCC

This device has been tested and found to comply with the limits for a Class B digital device pursuant to Part 15 of the FCC rules. These limits are designed to provide reasonable protection against harmful interference in a residential installation. This device generates, uses and can radiate radio frequency energy and, if not installed and used in accordance with the instructions, may cause harmful interference to radio communications.

However, there is no guarantee that interference will not occur in a particular installation. If this device does cause harmful interference to radio or television reception, which can be determined by turning the device off and on is encouraged to try to correct the interference by one or more of the following measures:

- Reorient or relocate the receiving antenna.
- Increase the separation between the device and receiver.
- Connect the device into an outlet on a circuit different from that to which the receiver is connected.
- Consult the dealer or an experienced radio/television technician for help.

Notice: Shielded cables

All connections to other computing devices must be made using shielded cables to maintain compliance with FCC regulations.

Caution

Changes or modifications not expressly approved by the manufacturer could void the user's authority, which is granted by the Federal Communications Commission, to operate this projector.

Operation Conditions

This device complies with Part 15 of the FCC Rules. Operation is subject to the following two conditions:

1. This device may not cause harmful interference and

2. This device must accept any interference received, including interference that may cause undesired operation.

Notice: Canadian users

This Class B digital apparatus complies with Canadian ICES-003.

Remarque à l'intention des utilisateurs canadiens

Cet appareil numerique de la classe B est conforme a la norme NMB-003 du Canada.

Declaration of Conformity for EU countries

- EMC Directive 2004/108/EC (including amendments)
- Low Voltage Directive 2006/95/EC
- R & TTE Directive 1999/5/EC (if product has RF function)

WEEE

Disposal instructions

Do not throw this electronic device into the trash when discarding. To minimize pollution and ensure utmost protection of the global environment, please recycle it.

INTRODUCTION

Package Overview

Carefully unpack and verify that you have the items listed below under standard accessories. Some of the items under optional accessories may not be available depending on the model, specification and your region of purchase. Please check with your place of purchase. Some accessories may vary from region to region.

The warranty card is only supplied in some specific regions. Please consult your dealer for detailed information.

Standard accessories

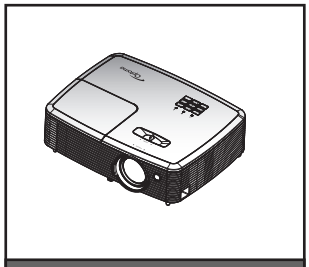

Projector

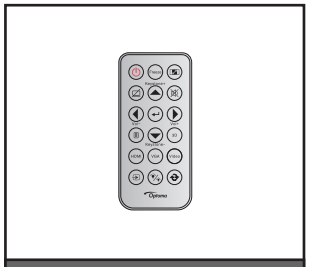

Remote control *(3)

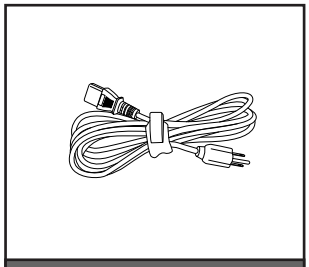

Power lead

- ☑ CD User Manual *(1)
- ☑ Warranty Card *(2)
- ☑ Basic User Manual

Documentation

Note:

- *The remote control is shipped with the battery.*
- **(1) For European User Manual please visit www.optomaeurope.com.*
- **(2) For European warranty information please visit www.optomaeurope.com.*
- **(3) The actual remote control may vary depending on the region.*

Optional accessories

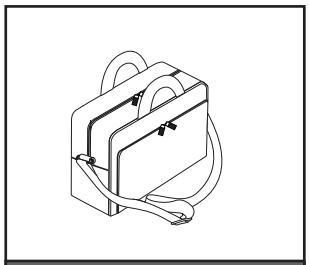

Carry bag

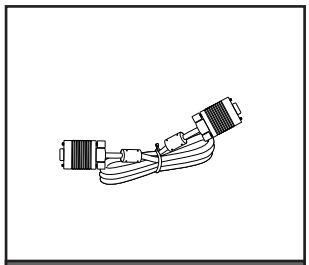

VGA cable

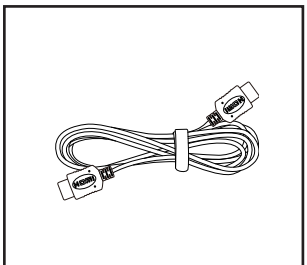

HDMI cable

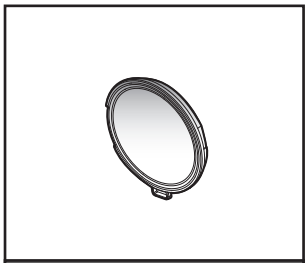

Lens cap

Note: *Optional accessories vary depending on model, specification and region.*

INTRODUCTION

Product Overview

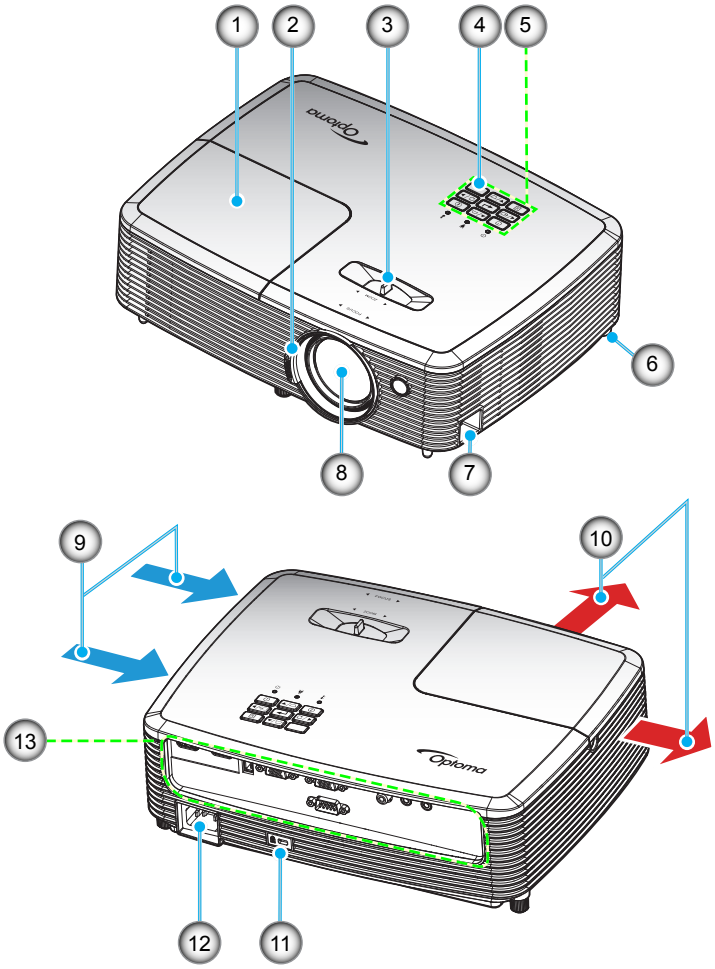

Note: *Keep a minimum distance of 20 cm between the "inlet" and "outlet" labels.*

No	Item	No	Item
1.	Lamp Cover	8.	Lens
2.	Focus Ring	9.	Ventilation (inlet)
3.	Zoom Lever	10.	Ventilation (outlet)
4.	IR Receiver	11.	Kensington™ Lock Port
5.	Keypad	12.	Power Socket
6.	Tilt-Adjustment Foot	13.	Input / Output
7.	Security Bar		

INTRODUCTION

Connections

Type 1 (9 IO)

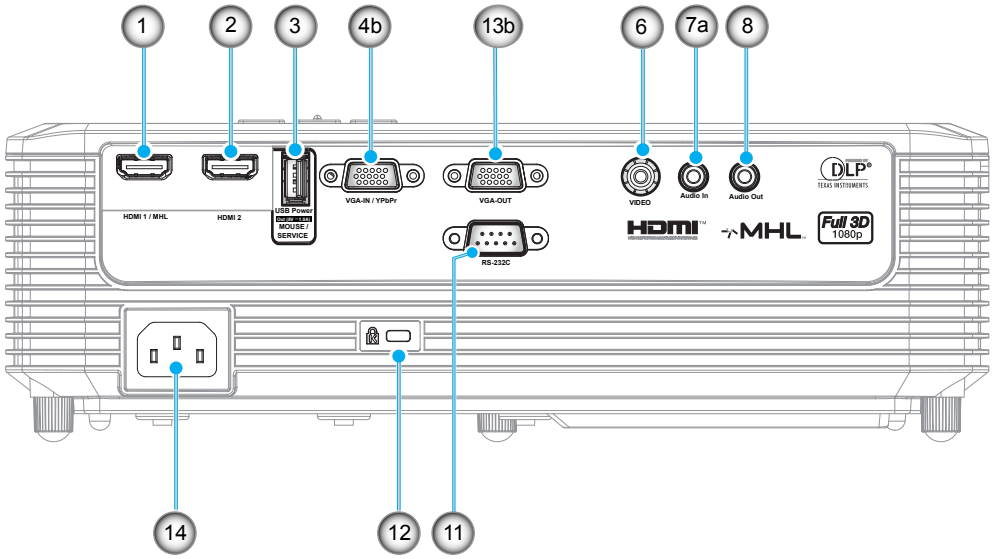

Type 2 (13 IO)

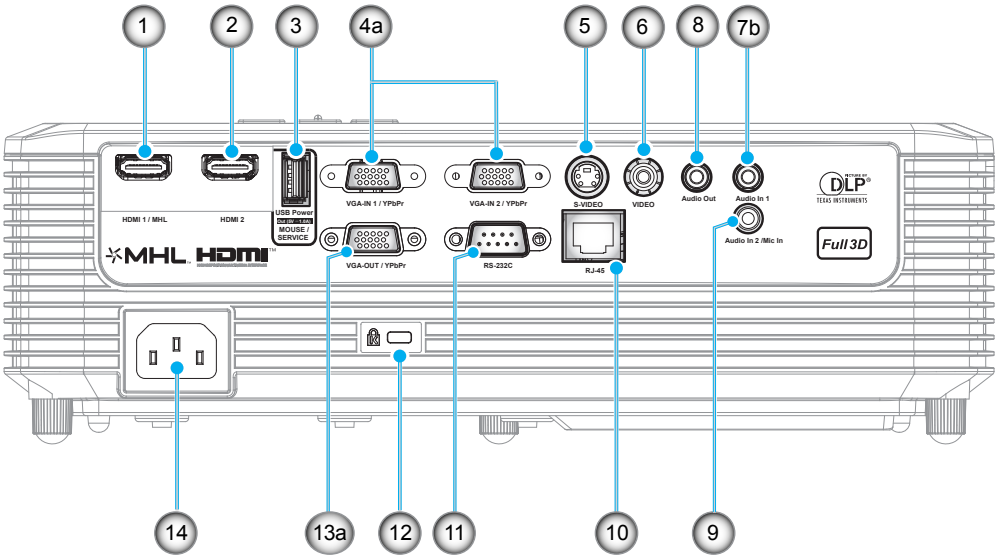

INTRODUCTION

No	Item	Type 1 (9 IO)	Type 2 (13 IO)
1.	HDMI 1 / MHL Connector	√	√
2.	HDMI 2 Connector	√	√
3.	USB Power Out (5V⎓1A) Connector / MOUSE / SERVICE Connector	√	√*
4.	a) VGA-IN 1 / YPbPr Connector and VGA-IN 2 / YPbPr Connector b) VGA-IN / YPbPr Connector	√	√ (x2)
5.	S-VIDEO Connector	N/A	√
6.	Composite Connector	√	√
7.	a) Audio In Connector b) Audio In 1 Connector	√	√
8.	Audio Out Connector	√	√
9.	Audio In 2 / Mic In Connector	N/A	√
10.	RJ-45 Connector	N/A	√
11.	RS-232C Connector	√	√
12.	Kensington™ Lock Port	√	√
13.	a) VGA-OUT / YPbPr Connector b) VGA-OUT Connector	√	√
14.	Power Socket	√	√
Note: *"√" means the item is supported, "N/A" means the item is not available.*			

Note:

- *Remote mouse requires special remote control.*
- **This model supports mouse / service capability.*

INTRODUCTION

Keypad

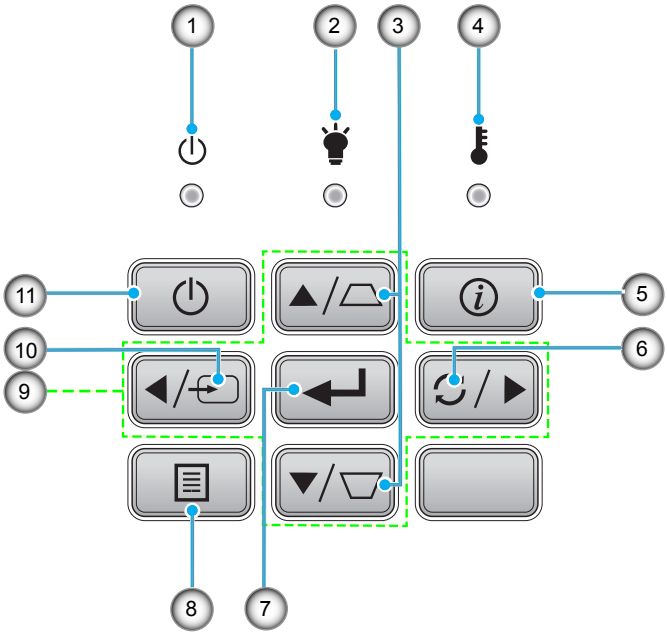

No	Item	No	Item
1.	On/Standby LED	7.	Enter
2.	Lamp LED	8.	Menu
3.	Keystone Correction	9.	Four Directional Select Keys
4.	Temp LED	10.	Source
5.	Information	11.	Power
6.	Re-Sync		

INTRODUCTION

Remote control 1

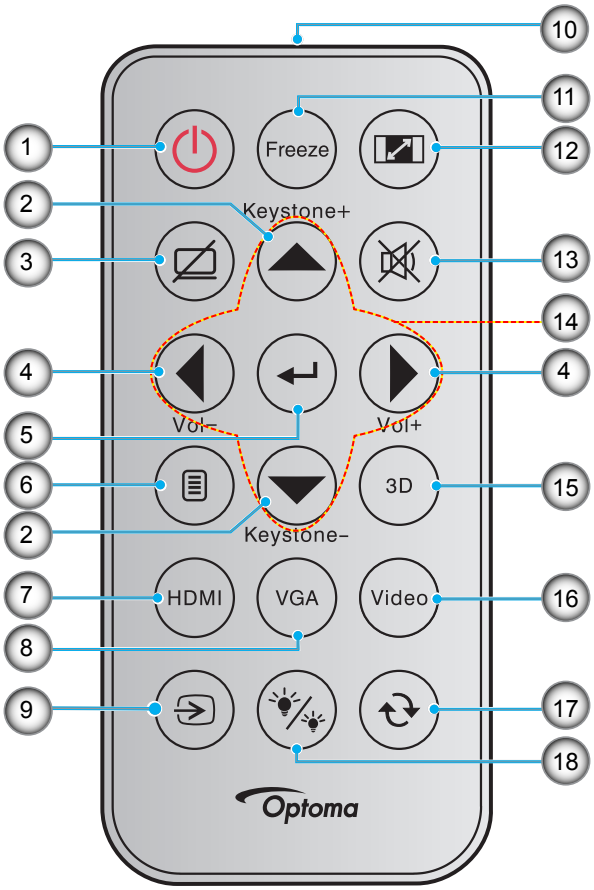

No	Item	No	Item
1.	Power On / Off	10.	IR LED Indicator
2.	Keystone + / -	11.	Freeze
3.	AV Mute	12.	Aspect Ratio
4.	Volume - / +	13.	Mute
5.	Enter	14.	Four Directional Select Keys
6.	Menu	15.	3D
7.	HDMI	16.	Video
8.	VGA	17.	Resync
9.	Source	18.	Brightness Mode

Note:

- *The actual remote control may vary depending on the region.*
- *Some keys may have no function for models that do not support these features.*
- *Before using the remote control for the first time, remove the transparent insulation tape. See page 20 for battery installation.*

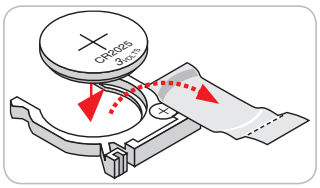

INTRODUCTION

Remote control 2

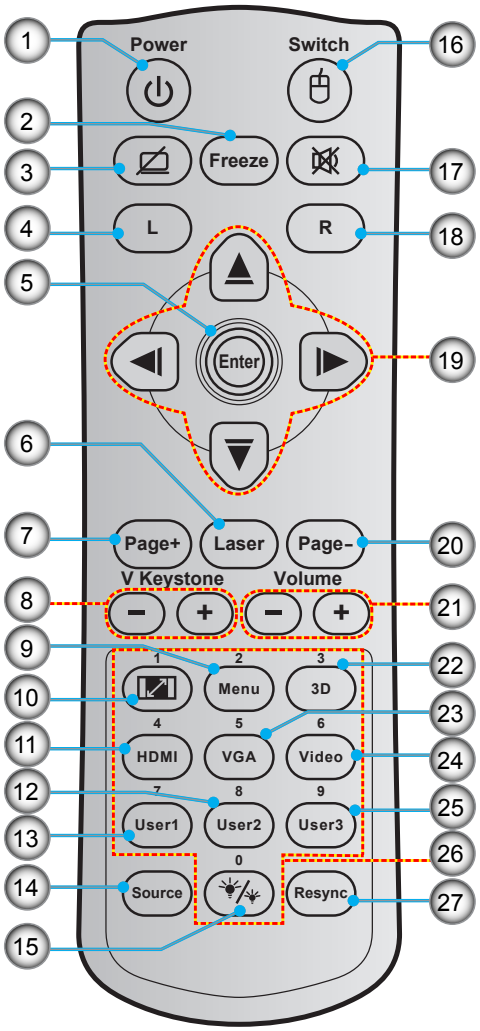

No	Item	No	Item
1.	Power On / Off	15.	Brightness Mode
2.	Freeze	16.	Mouse On / Off
3.	Display Blank / Audio Mute	17.	Mute
4.	Mouse Left Click	18.	Mouse Right Click
5.	Enter	19.	Four Directional Select Keys
6.	Laser	20.	Page -
7.	Page +	21.	Volume - / +
8.	V Keystone - / +	22.	3D Menu On / Off
9.	Menu	23.	VGA
10.	Aspect Ratio	24.	Video
11.	HDMI	25.	User 3
12.	User 2	26.	Numeric Keypad (0-9)
13.	User 1	27.	Resync
14.	Source		

Note:

- *The actual remote control may vary depending on the region.*
- *Some keys may have no function for models that do not support these features.*

SETUP AND INSTALLATION

Installing the projector

Your projector is designed to be installed in one of four possible positions.

Your room layout or personal preference will dictate which installation location you select. Take into consideration the size and position of your screen, the location of a suitable power outlet, as well as the location and distance between the projector and the rest of your equipment.

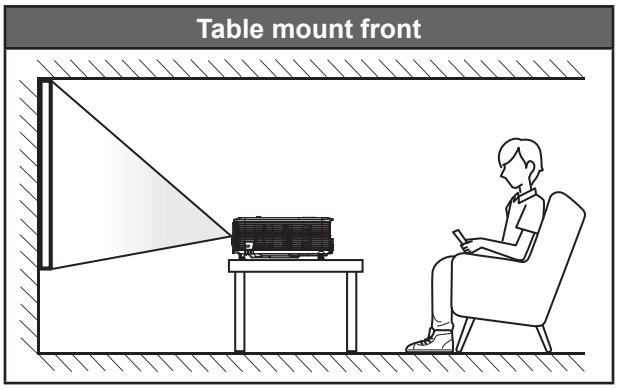

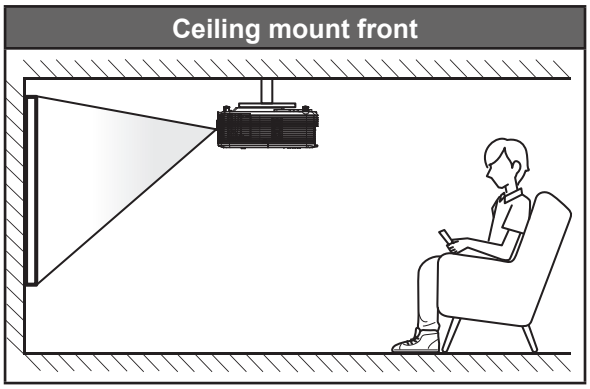

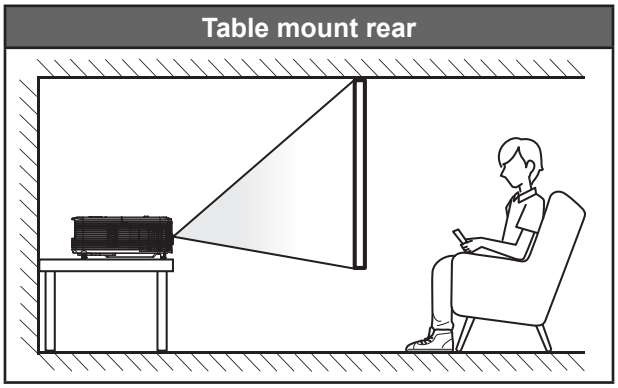

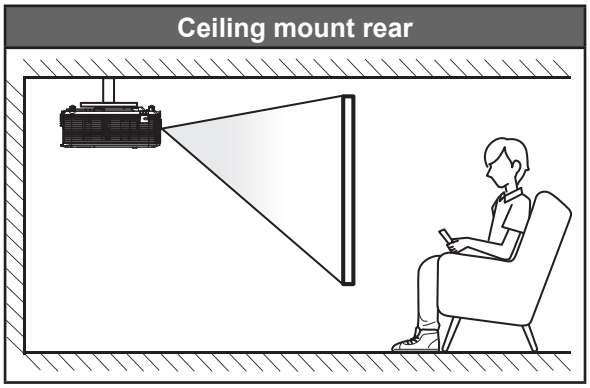

Projector should be placed flat on a surface and 90 degrees / perpendicular to the screen.

- How to determine projector location for a given screen size, please refer to distance table on pages *68-71*.
- How to determine screen size for a given distance, please refer to distance table on pages *68-71*.

Note: *The further away the projector is placed from the screen the projected image size increases and vertical offset also increases proportionally.*

IMPORTANT!

Do not operate the projector in any orientation other that table top or ceiling mount. The projector should be horizontal and not tilted either forwards/backwards or left/right. Any other orientation will invalidate the warranty and may shorten the lifetime of the projector lamp or the projector itself. For none standard installation advise please contact Optoma.

SETUP AND INSTALLATION

Type 1 (9 IO)

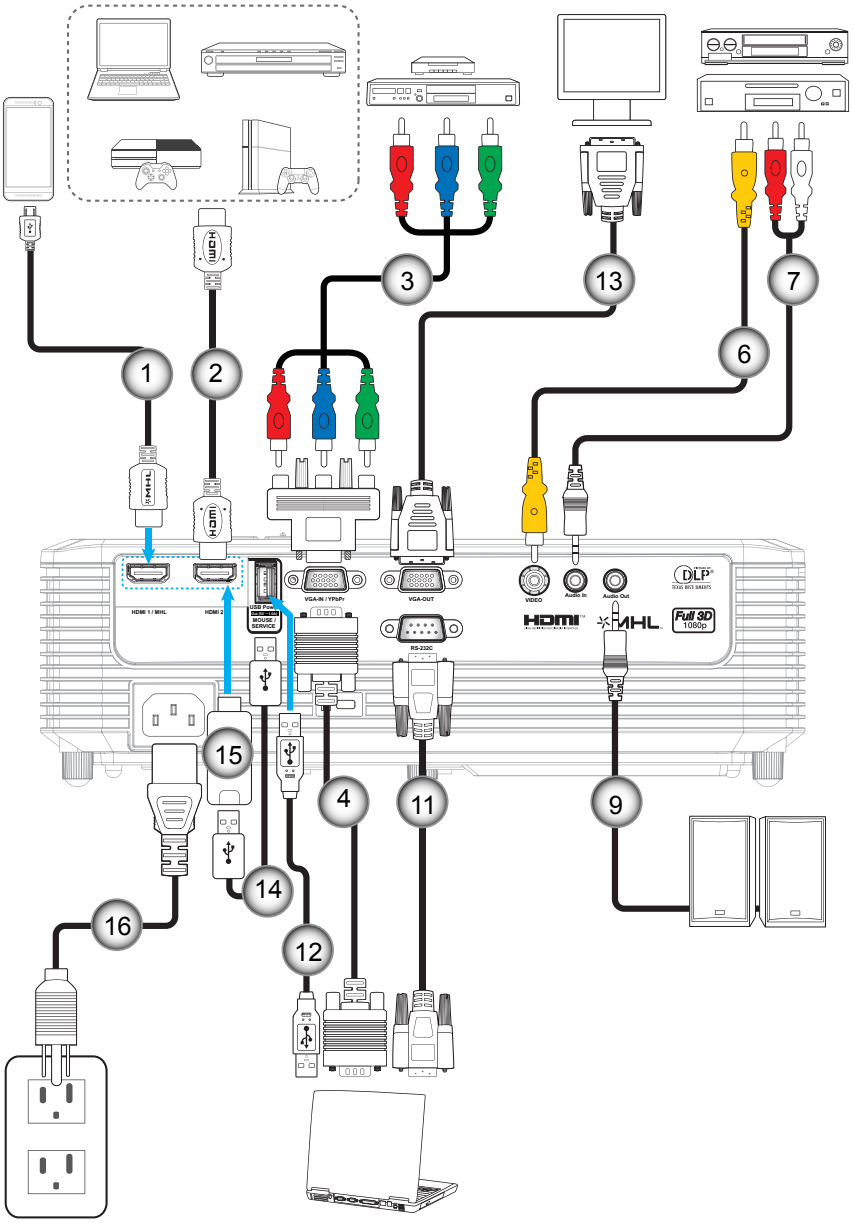

SETUP AND INSTALLATION

Type 2 (13 IO)

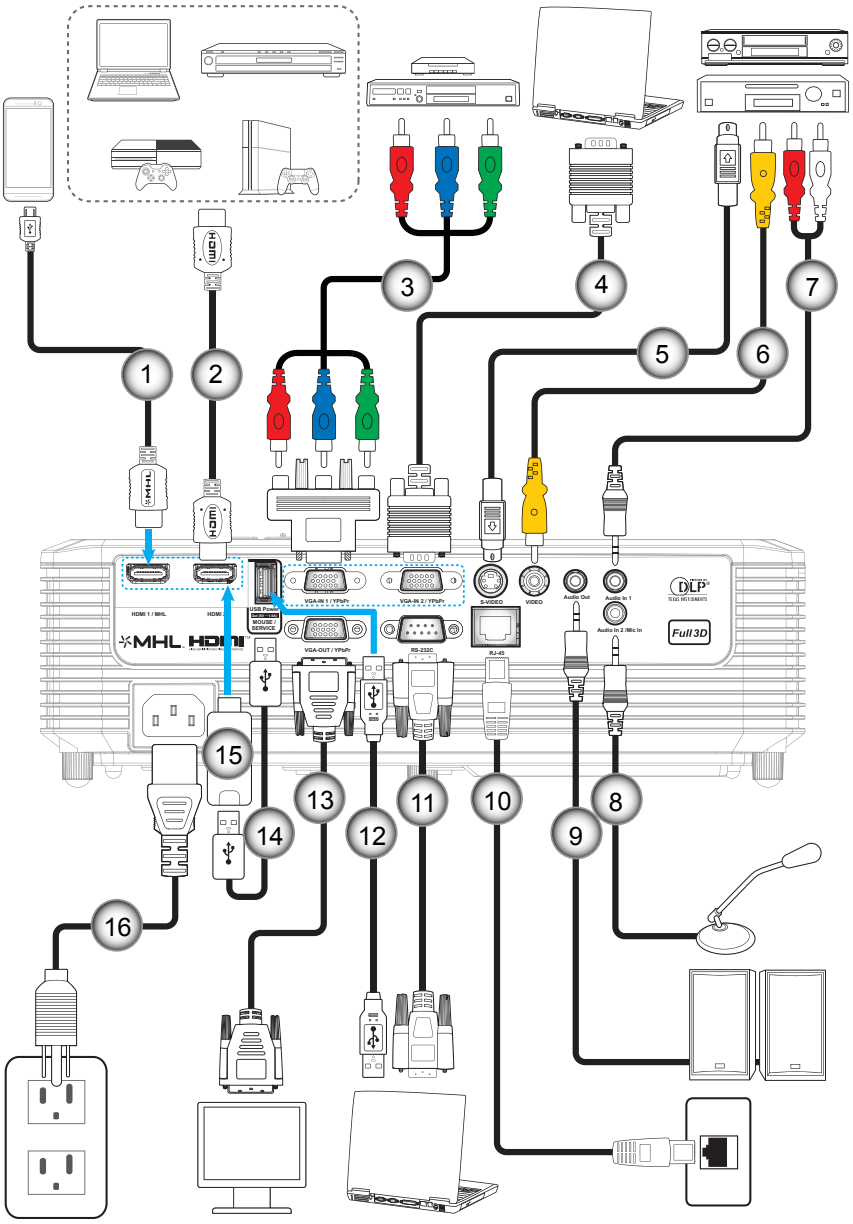

SETUP AND INSTALLATION

No	Item	Type 1 (9 IO)	Type 2 (13 IO)
1.	MHL Cable	√	√
2.	HDMI Cable	√	√
3.	RCA Component Cable	√	√
4.	VGA In Cable	√	√
5.	S-Video Cable	N/A	√
6.	Video Cable	√	√
7.	Audio In Cable	√	√
8.	Microphone In Cable	N/A	√
9.	Audio Out Cable	√	√
10.	RJ-45 Cable	N/A	√
11.	RS232C Cable	√	√
12.	USB Cable (mouse control)	√	√
13.	VGA Out Cable	√	√
14.	USB Power Cable	√	√
15.	HDMI Stick	√	√
16.	Power Cord	√	√
Note: *"√" means the item is supported, "N/A" means the item is not available.*			

SETUP AND INSTALLATION

Adjusting the projector image

Image height

The projector is equipped with elevator feet for adjusting the image height.

1. Locate the adjustable foot you wish to adjust on the underside of the projector.
2. Rotate the adjustable foot clockwise or counterclockwise to raise or lower the projector.

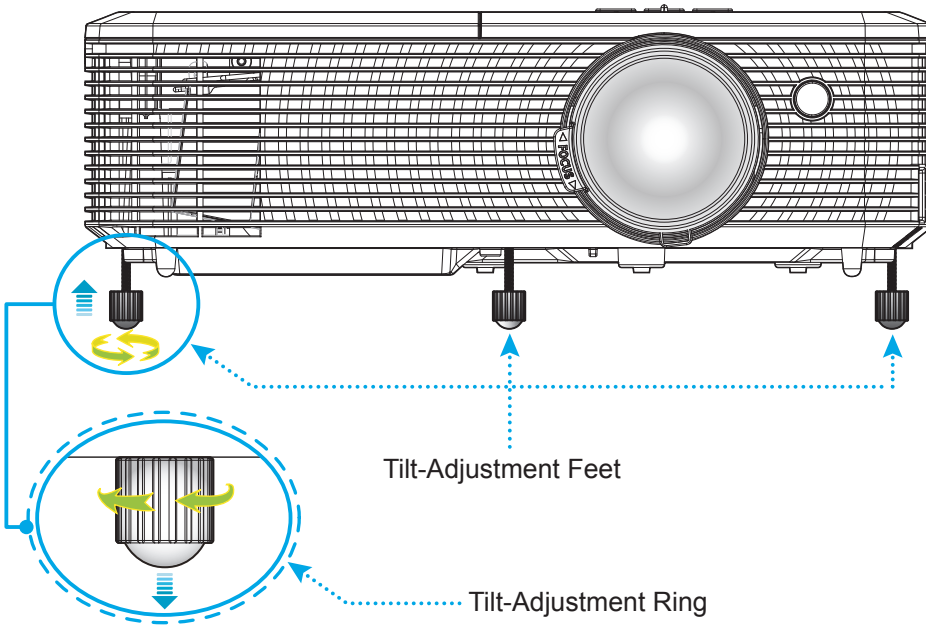

Zoom and focus

- To adjust the image size, turn the zoom lever clockwise or counterclockwise to increase or decrease the projected image size.
- To adjust the focus, turn the focus ring clockwise or counterclockwise until the image is sharp and legible.

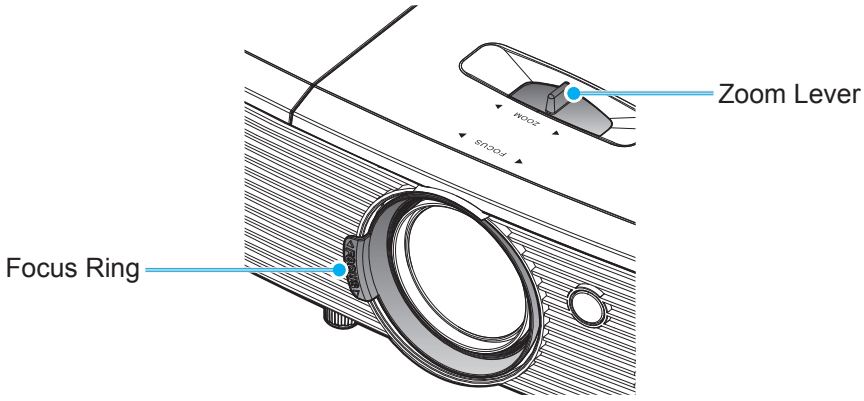

Note: *The projector will focus at a distance of 1m to 10m.*

SETUP AND INSTALLATION

Installing / replacing the batteries

1. Press firmly and slide the battery cover off.

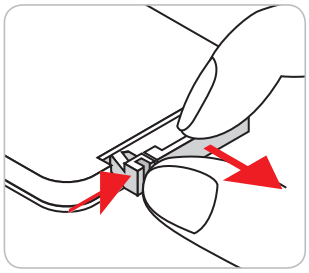

2. Install new battery into the compartment. Remove the old battery and install new one (CR2025). Ensure that the side with a “+” is facing up.

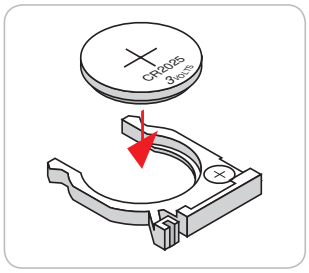

3. Put the cover back.

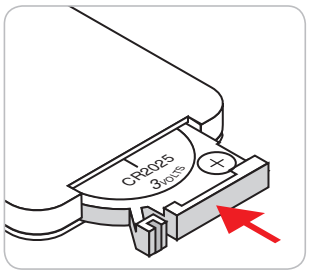

CAUTION: To ensure safe operation, please observe the following precautions:

- Use CR2025 type battery.
- Avoid contact with water or liquid.
- Do not expose the remote control to moisture or heat.
- Do not drop the remote control.
- If the battery has leaked in the remote control, carefully wipe the case clean and install new battery.
- Risk of an explosion if battery is replaced by an incorrect type.
- Dispose of used battery according to the instructions.

SETUP AND INSTALLATION

Effective range

Infra-Red (IR) remote control sensor is located on top of the projector. Ensure to hold the remote control at an angle within 30 degrees perpendicular to the projector's top IR remote control sensor to function correctly. The distance between the remote control and the sensor should not be longer than 6 meters (~ 20 feet).

Note: *When pointing the remote control directly (0 degrees angle) on the IR sensor, the distance between the remote control and the sensor should not be longer than 8 meters (~ 26 feet).*

- Make sure that there are no obstacles between the remote control and the IR sensor on the projector that might obstruct the infra-red beam.
- Make sure the IR transmitter of the remote control is not being shined by sunlight or fluorescent lamps directly.
- Please keep the remote controller away from fluorescent lamps for over 2 meters or the remote controller might become malfunction.
- If the remote control is close to Inverter-Type fluorescent lamps, it might become ineffective from time to time.
- If the remote control and the projector are within a very short distance, the remote control might become ineffective.
- When you aim at the screen, the effective distance is less than 6 meters from the remote control to the screen and reflecting the IR beams back to the projector. However, the effective range might change according to screens.

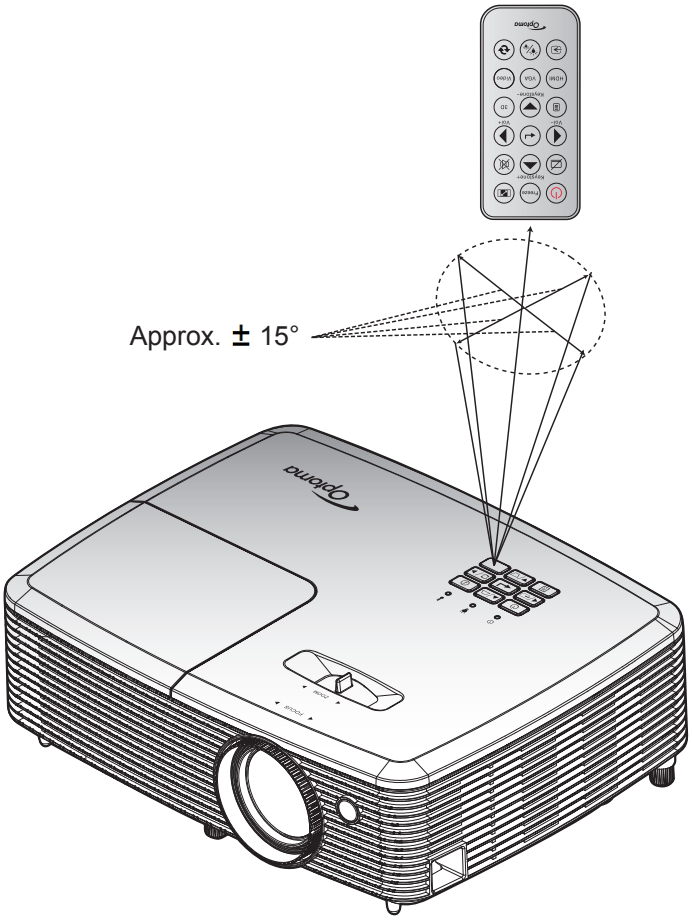

USING THE PROJECTOR

Powering on / off the projector

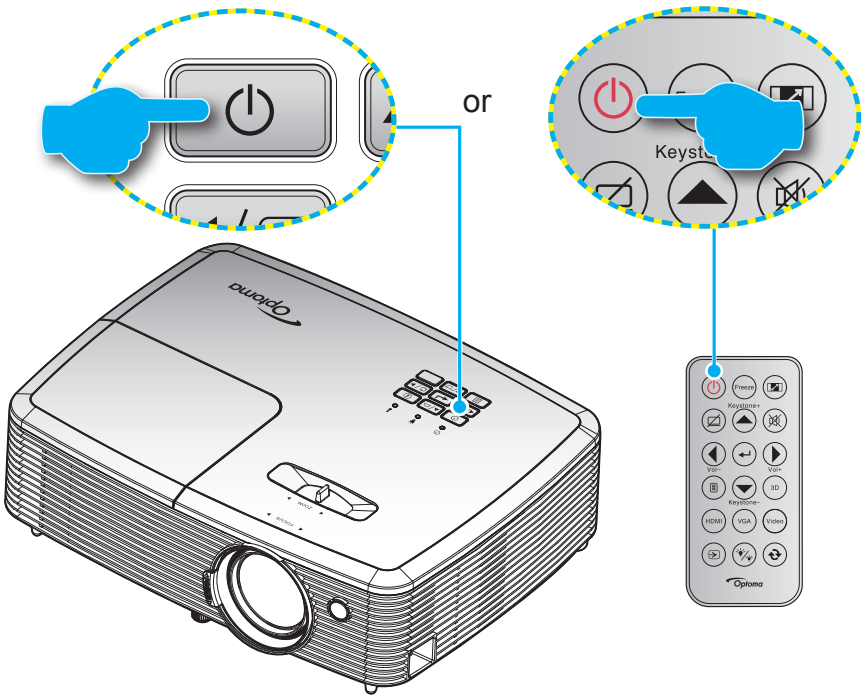

Powering on

1. Securely connect the power lead and signal/source cable. When connected, the On/Standby LED will turn red.
2. Turn on the projector by pressing the "⏻" either on the projector keypad or the remote control.
3. A start up screen will display in approximately 10 seconds and the On/Standby LED will be flashing green or flashing blue.

Note: *The first time the projector is turned on, you will be prompted to select the preferred language, projection orientation, and other settings.*

Powering off

1. Turn off the projector by pressing the "⏻" either on the projector keypad or the remote control.
2. The following message will be displayed:

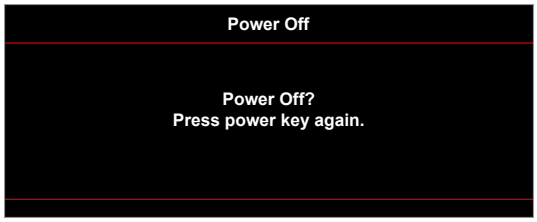

3. Press the "⏻" again to confirm, otherwise the message will disappear after 15 seconds. When you press the "⏻" button for the second time, the projector will shut down.
4. The cooling fans will continue to operate for about 10 seconds for the cooling cycle and the On/Standby LED will flash green or flash blue. When the On/Standby LED turns solid red, this indicates the projector has entered standby mode. If you wish to turn the projector back on, you must wait until the cooling cycle has finished and the projector has entered standby mode. When the projector is in standby mode, simply press the "⏻" button again to turn on the projector.
5. Disconnect the power lead from the electrical outlet and the projector.

Note: *It is not recommended that the projector is turned on immediately, right after a power off procedure.*

USING THE PROJECTOR

Selecting an input source

Turn on the connected source that you want to display on the screen, such as computer, notebook, video player, etc. The projector will automatically detect the source. If multiple sources are connected, push the source button on the projector keypad or the remote control to select the desired input.

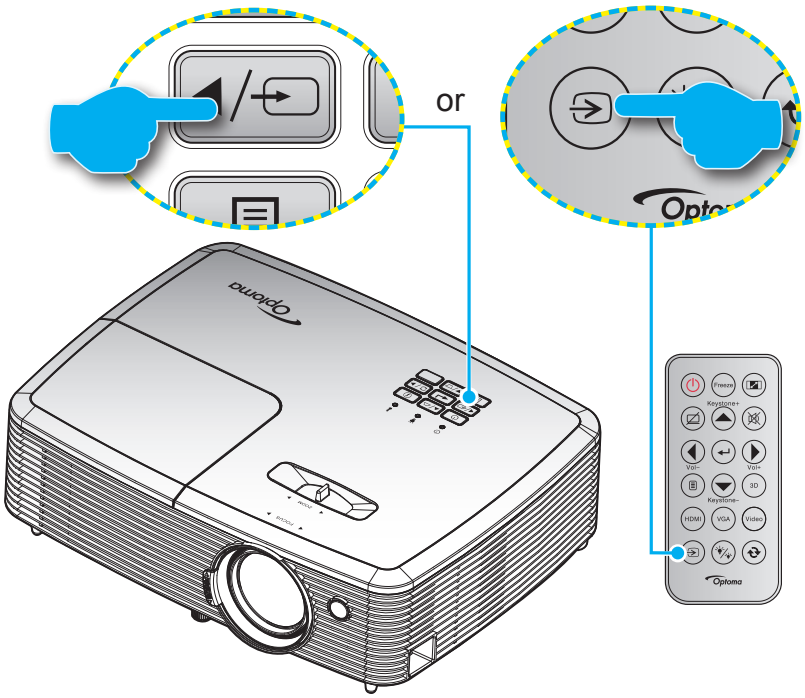

USING THE PROJECTOR

Menu navigation and features

The projector has multilingual on-screen display menus that allow you to make image adjustments and change a variety of settings. The projector will automatically detect the source.

1. To open the OSD menu, press ☰ on the remote control or the projector keyboard.
2. When OSD is displayed, use ▲▼ keys to select any item in the main menu. While making a selection on a particular page, press ↵ or ▶ key to enter sub menu.
3. Use ◀▶ keys to select the desired item in the sub menu and then press ↵ or ▶ key to view further settings. Adjust the settings by using ◀▶ keys.
4. Select the next item to be adjusted in the sub menu and adjust as described above.
5. Press the ↵ or ▶ to confirm, and the screen will return to the main menu.
6. To exit, press the ◀ or ☰ again. The OSD menu will close and the projector will automatically save the new settings.

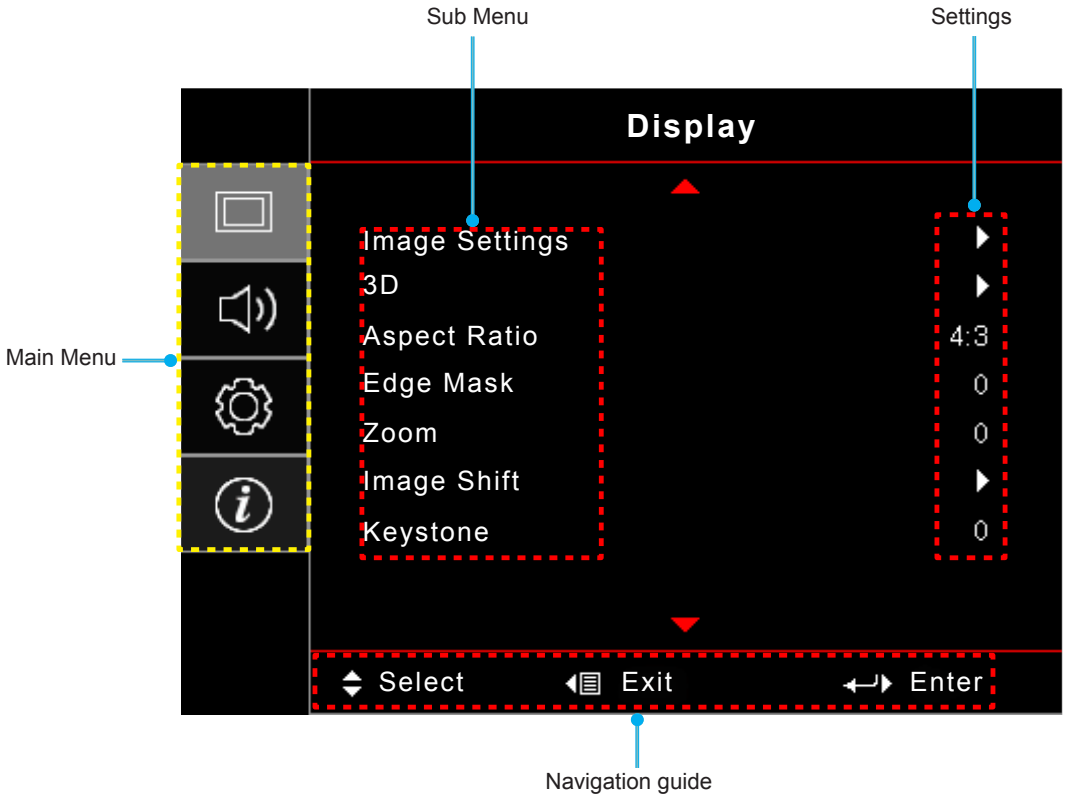

OSD Menu tree (Type 1)

Main Menu	Sub Menu	Sub Menu 2	Sub Menu 3	Sub Menu 4	Values
Display	Image Settings	Display Mode	[Data]		Presentation
					Bright
					Cinema
					Game
					sRGB
					DICOM SIM.
					User
					3D
		Wall Color			Off [Default]
					Blackboard
					Light Yellow
					Light Green
					Light Blue
					Pink
					Gray
		Brightness			-50~50
		Contrast			-50~50
		Sharpness			1~15
		Color			-50~50
		Tint			-50~50
		Gamma	Film		
			Video		
			Graphics		
			Standard(2.2)		
			1.8		
			2.0		
			2.4		
		Color Settings	BrilliantColor™		1~10
			Color Temperature	[Data mode]	Warm
					Medium
					Cool
			Color Matching	Color	R [Default]
					G
					B
					C
					Y
					M
					W
				Hue	-50~50 [Default: 0]
				Saturation	-50~50 [Default: 0]
				Gain	-50~50 [Default: 0]

Main Menu	Sub Menu	Sub Menu 2	Sub Menu 3	Sub Menu 4	Values
Display	Image Settings	Color Settings	Color Matching	Reset	Cancel [Default]
					Yes
				Exit	
			RGB Gain/Bias	Red Gain	-50~50
				Green Gain	-50~50
				Blue Gain	-50~50
				Red Bias	-50~50
				Green Bias	-50~50
				Blue Bias	-50~50
				Reset	Cancel [Default]
					Yes
				Exit	
			Color Space [Not HDMI Input]		Auto [Default]
					RGB
					YUV
			Color Space [HDMI Input]		Auto [Default]
					RGB(0~255)
					RGB(16~235)
					YUV
			White Level		0~31 (depends on signal)
			Black Level		-5~5 (depends on signal)
			IRE		0
					7.5
		Signal	Automatic		Off
					On [Default]
			Frequency		-50~50 (depends on signal) [Default: 0]
			Phase		0~31 (depends on signal) [Default: 0]
			H. Position		-50~50 (depends on signal) [Default: 0]
			V. Position		-50~50 (depends on signal) [Default: 0]
		Brightness Mode		[Lamp Base - Data]	Bright
					Eco.
					Dynamic
					Eco+
		Reset			

USING THE PROJECTOR

Main Menu	Sub Menu	Sub Menu 2	Sub Menu 3	Sub Menu 4	Values
Display	3D	3D Mode			Off
					DLP-Link [Default]
					IR
		3D->2D			3D [Default]
					L
					R
		3D Format			Auto [Default]
					SBS
					Top and Bottom
					Frame Sequential
		3D sync invert			On
					Off [Default]
	Aspect Ratio				4:3
					16:9
					16:10 [WXGA WUXGA models]
					LBX [except SVGA XGA models]
					Native
					Auto
	Edge Mask				0~10 [Default: 0]
	Zoom				-5~25 [Default: 0]
	Image shift	H: -50~50			[Default:0]
		V: -50~50			
	Keystone				-40~40
Audio	Mute				Off [Default]
					On
	Volume				0-10 [Default: 5]
Setup	Projection				Front [Default]
					Rear
					Ceiling-top
					Rear-top
	Screen Type	[WXGA/WUXGA models]			16:9
					16:10 [Default]
	Lamp Settings	Lamp Reminder			Off
					On [Default]
		Lamp Reset			Cancel [Default]
					Yes

Main Menu	Sub Menu	Sub Menu 2	Sub Menu 3	Sub Menu 4	Values
Setup	Filter Settings	Optional Filter Installed			Yes
					No
		Filter Usage Hours			(Read only)
		Filter Reminder			Off
					300hr
					500hr [Default]
					800hr
					1000hr
		Filter Reset			Cancel [Default]
					Yes
	Power Settings	Direct Power On			Off [Default]
					On
		Signal Power On			Off [Default]
					On
		Auto Power Off (min)			0~180 (5 min increments) [Default: 0]
		Sleep Timer (min)			0~990 (30 min increments) [Default: 0]
			Always On		No [Default]
					Yes
		Quick Resume			Off
					On [Default]
		Power Mode (Standby)			Active
					Eco [Default]
		USB Power			Off [Default]
					On
					Auto
	Security	Security			Off
					On
		Security Timer	Month		
			Day		
			Hour		
		Change Password			
	HDMI Link Settings	HDMI Link			Off
					On
		Inclusive of TV			No
					Yes
		Power On Link			Mutual
					PJ --> Device
					Device --> PJ
		Power Off Link			Off
					On
	Test Pattern				Green Grid
					Magenta Grid

Main Menu	Sub Menu	Sub Menu 2	Sub Menu 3	Sub Menu 4	Values
Setup	Test Pattern				White Grid
					White
					Off
	Remote Settings [depends on remote]	IR Function			On
					Off
		User1			HDMI 2
					Test Pattern
					Brightness
					Contrast
					Sleep Timer [Default]
					Color Matching
					Color Temp
					Gamma
					Projection
					Lamp Settings
					Zoom
					Freeze
					MHL
		User2			HDMI 2
					Test Pattern
					Brightness
					Contrast
					Sleep Timer
					Color Matching [Default]
					Color Temp
					Gamma
					Projection
					Lamp Settings
					Zoom
					Freeze
					MHL
		User3			HDMI 2
					Test Pattern
					Brightness
					Contrast
					Sleep Timer
					Color Matching
					Color Temp [Default]
					Gamma
					Projection
					Lamp Settings
					Zoom
					Freeze
					MHL

Main Menu	Sub Menu	Sub Menu 2	Sub Menu 3	Sub Menu 4	Values
Setup	Projector ID				0~99
	Options	Language			English [Default]
					Deutsch
					Français
					Italiano
					Español
					Português
					Polski
					Nederlands
					Svenska
					Norsk
					Dansk
					Suomi
					ελληνικά
					繁體中文
					簡体中文
					日本語
					한국어
					Русский
					Magyar
					Čeština
					عـربي
					ไทย
					Türkçe
					فارسـی
					Tiếng Việt
					Bahasa Indonesia
					Română
					Slovenčina
		Closed Captioning			CC1
					CC2
					Off [Default]
		Menu Settings	Menu Location		Top left
					Top right
					Center [Default]
					Bottom left
					Bottom right
			Menu Timer		Off
					5sec
					10sec [Default]
		Auto Source			Off [Default]
					On

Main Menu	Sub Menu	Sub Menu 2	Sub Menu 3	Sub Menu 4	Values
Setup	Options	Input Source			HDMI1/MHL
					HDMI2
					VGA
					Video
		Input Name	HDMI1/MHL		Default [Default]
					Custom
			HDMI2		Default [Default]
					Custom
			VGA		Default [Default]
					Custom
			Video		Default [Default]
					Custom
		High Altitude			Off [Default]
					On
		Display Mode Lock			Off [Default]
					On
		Keypad Lock			Off [Default]
					On
		Information Hide			Off [Default]
					On
		Logo			Default [Default]
					Neutral
		Background Color			None [Default, for Video/Pro-AV model]
					Blue [Default, for Data model]
					Red
					Green
					Grey
					Logo
	Reset	Reset OSD			Cancel [Default]
					Yes
		Reset to Default			Cancel [Default]
					Yes

Main Menu	Sub Menu	Sub Menu 2	Sub Menu 3	Sub Menu 4	Values
Information	Regulatory				
	Serial Number				
	Source				
	Resolution				00x00
	Refresh Rate				0.00Hz
	Display Mode				
	Power mode (Standby)				
	Lamp Hours	Bright			0H
		Eco			0H
		Dynamic			0H
		Eco+			0H
		Total			
	Projector ID				00~99
	Filter Usage Hours				
	Brightness Mode				
	FW Version	System			
		MCU			

Note:

- *The "Lamp Reset" in OSD will only reset both Lamp Hours in OSD and Lamp Hours in service mode. The Projection Hours in service mode will not be reset.*
- *Each display mode can be adjusted and saved the value.*
- *In 3D timing mode, the zoom/edge mask will be disabled to prevent from image break.*

OSD Menu tree (Type 2)

Main Menu	Sub Menu	Sub Menu 2	Sub Menu 3	Sub Menu 4	Values
Display	Image Settings	Display Mode	[Data]		Presentation
					Bright
					Cinema
					Game
					sRGB
					DICOM SIM.
					User
					3D
		Wall Color			Off [Default]
					Blackboard
					Light Yellow
					Light Green
					Light Blue
					Pink
					Gray
		Brightness			-50~50
		Contrast			-50~50
		Sharpness			1~15
		Color			-50~50
		Tint			-50~50
		Gamma	Film		
			Video		
			Graphics		
			Standard(2.2)		
			1.8		
			2.0		
			2.4		
		Color Settings	BrilliantColor™		1~10
			Color Temperature	[Data mode]	Warm
					Medium
					Cool
			Color Matching	Color	R [Default]
					G
					B
					C
					Y
					M
					W
				Hue	-50~50 [Default: 0]
				Saturation	-50~50 [Default: 0]
				Gain	-50~50 [Default: 0]

Main Menu	Sub Menu	Sub Menu 2	Sub Menu 3	Sub Menu 4	Values
Display	Image Settings	Color Settings	Color Matching	Reset	Cancel [Default]
					Yes
				Exit	
			RGB Gain/Bias	Red Gain	-50~50
				Green Gain	-50~50
				Blue Gain	-50~50
				Red Bias	-50~50
				Green Bias	-50~50
				Blue Bias	-50~50
				Reset	Cancel [Default]
					Yes
				Exit	
			Color Space [Not HDMI Input]		Auto [Default]
					RGB
					YUV
			Color Space [HDMI Input]		Auto [Default]
					RGB(0~255)
					RGB(16~235)
					YUV
			White Level		0~31 (depends on signal)
			Black Level		-5~5 (depends on signal)
			IRE		0
					7.5
		Signal	Automatic		Off
					On [Default]
			Frequency		-50~50 (depends on signal) [Default: 0]
			Phase		0~31 (depends on signal) [Default: 0]
			H. Position		-50~50 (depends on signal) [Default: 0]
			V. Position		-50~50 (depends on signal) [Default: 0]
		Brightness Mode		[Lamp Base - Data]	Bright
					Eco.
					Dynamic
					Eco+
		Reset			

USING THE PROJECTOR

Main Menu	Sub Menu	Sub Menu 2	Sub Menu 3	Sub Menu 4	Values
Display	3D	3D Mode			Off
					DLP-Link [Default]
					IR
		3D->2D			3D [Default]
					L
					R
		3D Format			Auto [Default]
					SBS
					Top and Bottom
					Frame Sequential
		3D sync invert			On
					Off [Default]
	Aspect Ratio				4:3
					16:9
					16:10 [WXGA WUXGA models]
					LBX [except SVGA XGA models]
					Native
					Auto
	Edge Mask				0~10 [Default: 0]
	Zoom				-5~25 [Default: 0]
	Image shift	H: -50~50			[Default:0]
		V: -50~50			
	Keystone				-40~40
Audio	Mute				Off [Default]
					On
	Volume				0-10 [Default: 5]
	Audio Input	HDMI1/MHL			Audio 1
					Audio 2
					Default [Default]
		HDMI2			Audio 1
					Audio 2
					Default [Default]
		VGA1			Audio 1
					Audio 2
		VGA2			Audio 1
					Audio 2
		S-Video			Audio 1
					Audio 2
		Video			Audio 1
					Audio 2

Main Menu	Sub Menu	Sub Menu 2	Sub Menu 3	Sub Menu 4	Values
Setup	Projection				Front [Default]
					Rear
					Ceiling-top
					Rear-top
	Screen Type	[WXGA/WUXGA models]			16:9
					16:10 [Default]
	Lamp Settings	Lamp Reminder			Off
					On [Default]
		Lamp Reset			Cancel [Default]
					Yes
	Filter Settings	Optional Filter Installed			Yes
					No
		Filter Usage Hours			(Read only)
		Filter Reminder			Off
					300hr
					500hr [Default]
					800hr
					1000hr
		Filter Reset			Cancel [Default]
					Yes
	Power Settings	Direct Power On			Off [Default]
					On
		Signal Power On			Off [Default]
					On
		Auto Power Off (min)			0~180 (5 min increments) [Default: 0]
		Sleep Timer (min)			0~990 (30 min increments) [Default: 0]
			Always On		No [Default]
					Yes
		Quick Resume			Off
					On [Default]
		Power Mode (Standby)			Active
					Eco [Default]
		USB Power			Off [Default]
					On
					Auto
		Wireless			Off [Default]
					On

Main Menu	Sub Menu	Sub Menu 2	Sub Menu 3	Sub Menu 4	Values
Setup	Security	Security			Off
					On
		Security Timer	Month		
			Day		
			Hour		
		Change Password			
	HDMI Link Settings	HDMI Link			Off
					On
		Inclusive of TV			No
					Yes
		Power On Link			Mutual
					PJ --> Device
					Device --> PJ
		Power Off Link			Off
					On
	Test Pattern				Green Grid
					Magenta Grid
					White Grid
					White
					Off
	Remote Settings [depends on remote]	IR Function			On
					Off
		User1			HDMI 2
					VGA 2
					Test Pattern
					LAN
					Brightness
					Contrast
					Sleep Timer [Default]
					Color Matching
					Color Temp
					Gamma
					Projection
					Lamp Settings
					Zoom
					Freeze
					MHL
		User2			HDMI 2
					VGA 2
					Test Pattern
					LAN
					Brightness
					Contrast
					Sleep Timer

Main Menu	Sub Menu	Sub Menu 2	Sub Menu 3	Sub Menu 4	Values
Setup	Remote Settings [depends on remote]	User2			Color Matching [Default]
					Color Temp
					Gamma
					Projection
					Lamp Settings
					Zoom
					Freeze
					MHL
		User3			HDMI 2
					VGA 2
					Test Pattern
					LAN
					Brightness
					Contrast
					Sleep Timer
					Color Matching
					Color Temp [Default]
					Gamma
					Projection
					Lamp Settings
					Zoom
					Freeze
					MHL
	Projector ID				0~99
	Options	Language			English [Default]
					Deutsch
					Français
					Italiano
					Español
					Português
					Polski
					Nederlands
					Svenska
					Norsk
					Dansk
					Suomi
					ελληνικά
					繁體中文
					簡体中文
					日本語
					한국어
					Русский
					Magyar
					Čeština
					عـربي

Main Menu	Sub Menu	Sub Menu 2	Sub Menu 3	Sub Menu 4	Values
Setup	Options	Language			ไทย
					Türkçe
					فارســـی
					Tiếng Việt
					Bahasa Indonesia
					Română
					Slovenčina
		Closed Captioning			CC1
					CC2
					Off [Default]
		Menu Settings	Menu Location		Top left
					Top right
					Center [Default]
					Bottom left
					Bottom right
			Menu Timer		Off
					5sec
					10sec [Default]
		Auto Source			Off [Default]
					On
		Input Source			HDMI1/MHL
					HDMI2
					VGA 1
					VGA 2
					S-Video
					Video
		Input Name	HDMI1/MHL		Default [Default]
					Custom
			HDMI2		Default [Default]
					Custom
			VGA1		Default [Default]
					Custom
			VGA2		Default [Default]
					Custom
			S-Video		Default [Default]
					Custom
			Video		Default [Default]
					Custom
		High Altitude			Off [Default]
					On
		Display Mode Lock			Off [Default]
					On

Main Menu	Sub Menu	Sub Menu 2	Sub Menu 3	Sub Menu 4	Values
Setup	Options	Keypad Lock			Off [Default]
					On
		Information Hide			Off [Default]
					On
		Logo			Default [Default]
					Neutral
		Background Color			None [Default, for Video/Pro-AV model]
					Blue [Default, for Data model]
					Red
					Green
					Grey
					Logo
	Reset	Reset OSD			Cancel [Default]
					Yes
		Reset to Default			Cancel [Default]
					Yes
Network	LAN	Network Status			(read only)
		MAC Address			(read only)
		DHCP			Off [Default]
					On
		IP Address			192.168.0.100 [Default]
		Subnet Mask			255.255.255.0 [Default]
		Gateway			192.168.0.254 [Default]
		DNS			192.168.0.51 [Default]
		Reset			
	Control	Crestron			Off
					On [Default] **NOTE:** *Port 41794.*
		Extron			Off
					On [Default] **NOTE:** *Port 2023.*
		PJ Link			Off
					On [Default] **NOTE:** *Port 4352*
		AMX Device Discovery			Off
					On [Default] **NOTE:** *Port 9131*
		Telnet			Off
					On [Default] **NOTE:** *Port 23*
		HTTP			Off
					On [Default] **NOTE:** *Port 80*

Main Menu	Sub Menu	Sub Menu 2	Sub Menu 3	Sub Menu 4	Values
Information	Regulatory				
	Serial Number				
	Source				
	Resolution				00x00
	Refresh Rate				0.00Hz
	Display Mode				
	Power mode (Standby)				
	Lamp Hours	Bright			0H
		Eco			0H
		Dynamic			0H
		Eco+			0H
		Total			
	Network Status				
	IP Address				
	Projector ID				00~99
	Filter Usage Hours				
	Brightness Mode				
	FW Version	System			
		LAN			
		MCU			

Note:

- *The "Lamp Reset" in OSD will only reset both Lamp Hours in OSD and Lamp Hours in service mode. The Projection Hours in service mode will not be reset.*
- *Each display mode can be adjusted and saved the value.*
- *In 3D timing mode, the zoom/edge mask will be disabled to prevent from image break.*

USING THE PROJECTOR

Display menu

Display image settings menu

Display Mode (Data mode)

There are many factory presets optimized for various types of images.

- **Presentation**: This mode is suitable for showing PowerPoint presentations when the projector is connected to the PC.
- **Bright**: Maximum brightness from PC input.
- **Cinema**: Select this mode for home theater.
- **Game**: Select this mode to increase the brightness and response time level for enjoying video games.
- **sRGB**: Standardized accurate color.
- **DICOM SIM.**: This mode can project a monochrome medical image such as an X ray radiography, MRI, etc.
- **User**: Memorize user's settings.
- **3D**: To experience the 3D effect, you need to have 3D glasses. Make sure your PC/portable device has a 120 Hz signal output quad buffered graphics card and a 3D Player installed.

Wall Color

Use this function to obtain an optimized screen image according to the wall color. Select between off, blackboard, light yellow, light green, light blue, pink, and gray.

Brightness

Adjust the brightness of the image.

Contrast

The contrast controls the degree of difference between the lightest and darkest parts of the picture.

Sharpness

Adjust the sharpness of the image.

Color

Adjust a video image from black and white to fully saturated color.

Tint

Adjust the color balance of red and green.

Gamma

Set up gamma curve type. After the initial setup and fine tuning is completed, utilize the Gamma Adjustment steps to optimize your image output.

- **Film**: For home theater.
- **Video**: For video or TV source.
- **Graphics**: For PC / Photo source.
- **Standard(2.2)**: For standardized setting.
- **1.8/ 2.0/ 2.4**: For specific PC / Photo source.

Color Settings

Configure the color settings.

- **BrilliantColor™**: This adjustable item utilizes a new color-processing algorithm and enhancements to enable higher brightness while providing true, more vibrant colors in picture.

- **Color Temperature (Data mode)**: Select a color temperature from Warm, Medium, or Cool.
- **Color Matching**: Select the following options:
  - Color: Adjust the red (R), green (G), black (B), cyan (C), yellow (Y), magenta (M), and white (W) level of the image.
  - Hue: Adjust the color balance of red and green.
  - Saturation: Adjust a video image from black and white to fully saturated color.
  - Gain: Adjust the image brightness.
  - Reset: Return the factory default settings for color matching.
  - Exit: Exit the “Color Matching” menu.
- **RGB Gain/Bias:** This settings allows to configure the brightness (gain) and contrast (bias) of an image.
  - Reset: Return the factory default settings for RGB gain/bias.
  - Exit: Exit the “RGB Gain/Bias” menu.
- **Color Space (non-HDMI input only)**: Select an appropriate color matrix type from the following: AUTO, RGB, or YUV.
- **Color Space (HDMI input only)**: select an appropriate color matrix type from the following: Auto, RGB(0-255), RGB(16-235), and YUV.
- **White Level:** Allow user to adjust White Level when inputting Video signals.

  Note: *White level can only be adjusted for Video/S-Video input sources.*
- **Black Level:** Allow user to adjust Black Level when inputting Video signals.

  Note: *Black level can only be adjusted for Video/S-Video input sources.*
- **IRE:** Allow user to adjust IRE value when inputting Video signals.

  Note:
  - *IRE is only available with NTSC video format.*
  - *IRE can only be adjusted for Video/S-Video input sources.*

Signal

Adjust the signal options.

- **Automatic**: Configure automatically the signal (the frequency and phase items are grayed out). If automatic is disabled, the frequency and phase items will appear for tuning and saving the settings.
- **Frequency**: Change the display data frequency to match the frequency of your computer’s graphic card. Use this function only if the image appears to flicker vertically.
- **Phase**: Synchronize the signal timing of the display with the graphic card. If the image appears to be unstable or flickers, use this function to correct it.
- **H. Position**: Adjust the horizontal positioning of the image.
- **V. Position**: Adjust the vertical positioning of the image.

Note: *Signal can only be adjusted for RGB/Component input sources.*

Brightness Mode (Lamp base data)

Adjust the brightness mode settings for lamp-based projectors.

- **Bright**: Choose “Bright” to increase the brightness.
- **Eco.**: Choose “Eco.” to dim the projector lamp which will lower power consumption and extend the lamp life.
- **Dynamic**: Choose “Dynamic” to dim the lamp power which will be based on brightness level of the content and adjust lamp power consumption between 100% and 30% dynamically. The lamp life will be extended.

- **Eco+**: When Eco+ mode is activated, the brightness level of the content is automatically detected to significantly reduced lamp power consumption (up to 70%) during periods of inactivity.

Reset

Return the factory default settings for color settings.

Display 3D menu

3D Mode

Use this option to disable the 3D function or select the appropriate the 3D function.

- **Off**: Select “Off” to turn off 3D mode.
- **DLP-Link**: Select to use optimized settings for DLP 3D Glasses.
- **IR**: Select “IR” to use optimized setting for IR 3D Glasses.

3D → 2D

Use this option to specify how the 3D content should appear on the screen.

- **3D:** Display 3D signal.
- **L (Left):** Display the left frame of 3D content.
- **R (Right):** Display the right frame of 3D content.

3D Format

Use this option to select the appropriate 3D format content.

- **Auto**: When a 3D identification signal is detected, the 3D format is selected automatically.
- **SBS**: Display 3D signal in “Side-by-Side” format.
- **Top and Bottom**: Display 3D signal in “Top and Bottom” format.
- **Frame Sequential**: Display 3D signal in “Frame Sequential” format.

3D Sync Invert

Use this option to enable/disable the 3D sync invert function.

Display aspect ratio menu

Aspect Ratio

Select the aspect ratio of the displayed image between the following options:

- **4:3**: This format is for 4:3 input sources.
- **16:9**: This format is for 16:9 input sources, like HDTV and DVD enhanced for Wide screen TV.
- **16:10 (WXGA WUXGA models only)**: This format is for 16:10 input sources, like widescreen laptops.
- **LBX (except SVGA XGA model)**: This format is for non-16x9, letterbox source and if you use external 16x9 lens to display 2.35:1 aspect ratio in full resolution.
- **Native**: This format displays the original image without any scaling.
- **Auto**: Automatically selects the appropriate display format.

Note:

- *Detailed informations about LBX mode:*
  - *Some Letter-Box Format DVDs are not enhanced for 16x9 TVs. In this situation, the image will not look right when displaying image in 16:9 mode. In this situation, please try to use the 4:3 mode to view the DVD. If the content is not 4:3, there will be black bars around the image in 16:9 display. For this type of content, you can use LBX mode to fill the image on the 16:9 display.*
  - *If you use an external anamorphic lens, this LBX mode also allows you to watch a 2.35:1 content (include Anamorphic DVD and HDTV film source) that supports anamorphic wide is enhanced for 16x9 Display in a wide 2.35:1 image. In this case, there are no black bars. Lamp power and vertical resolution are fully utilized.*
- *To use the superwide format, do the following:*
  - *a) Set the screen aspect ratio to 2.0:1.*
  - *b) Select "Superwide" format.*
  - *c) Align the projector image correctly on the screen.*

XGA scaling table:

Source	480i/p	576i/p	1080i/p	720p
4x3	Scale to 1024x768.			
16x9	Scale to 1024x576.			
Native	No scaling will be made; the image is displayed with the resolution based on input source.			
Auto	-If source is 4:3, the screen type will be scaled to 1024x768. -If source is 16:9, the screen type will be scaled to 1024x576. -If source is 15:9, the screen type will be scaled to 1024x614. -If source is 16:10, the screen type will be scaled to 1024x640.			

XGA auto mapping rule:

Auto	Input resolution		Auto/Scale	
	H-resolution	V-resolution	1024	768
4:3	640	480	1024	768
	800	600	1024	768
	1024	768	1024	768
	1600	1200	1024	768
Wide Laptop	1280	720	1024	576
	1280	768	1024	614
	1280	800	1024	640
SDTV	720	576	1024	576
	720	480	1024	576
HDTV	1280	720	1024	576
	1920	1080	1024	576

WXGA scaling table (screen type 16:10):

Note:

- *Supported screen type 16:9 (1280x720), 16:10 (1280x800).*
- *When screen type is 16:9, the16x10 format becomes unavailable.*
- *When screen type is 16:10, the 16x9 format becomes unavailable.*
- *If you select auto option then the display mode will be also automatically changed.*

16 : 10 screen	480i/p	576i/p	1080i/p	720p	PC
4x3	Scale to 1066x800.				
16x10	Scale to 1280x800.				
LBX	Scale to 1280x960, then get the central 1280x800 image to display.				
Native mode	1:1 mapping centered.		1:1 mapping display 1280x800.	1280x720 centered.	1:1 mapping centered.
Auto	-Input source will be fit into 1280x800 display area and be kept its original aspect ratio. -If source is 4:3, the screen type will be scaled to 1066x800. -If source is 16:9, the screen type will be scaled to 1280x720. -If source is 15:9, the screen type will be scaled to 1280x768. -If source is 16:10, the screen type will be scaled to 1280x800.				

WXGA auto mapping rule (screen type 16:10):

Auto	Input resolution		Auto/Scale	
	H-resolution	V-resolution	1280	800
4:3	640	480	1066	800
	800	600	1066	800
	1024	768	1066	800
	1280	1024	1066	800
	1400	1050	1066	800
	1600	1200	1066	800
Wide Laptop	1280	720	1280	720
	1280	768	1280	768
	1280	800	1280	800
SDTV	720	576	1280	720
	720	480	1280	720
HDTV	1280	720	1280	720
	1920	1080	1280	720

WXGA scaling table (screen type 16:9):

16 : 9 screen	480i/p	576i/p	1080i/p	720p	PC
4x3	Scale to 960x720.				
16x9	Scale to 1280x720.				
LBX	Scale to 1280x960, then get the central 1280x720 image to display.				
Native mode	1:1 mapping centered.		1:1 mapping display 1280x720.	1280x720 centered.	1:1 mapping centred.
Auto	-If this format is select, screen type will automatically become 16:9 (1280x720). -If source is 4:3, the screen type will be scaled to 960x720. -If source is 16:9, the screen type will be scaled to 1280x720. -If source is 15:9, the screen type will be scaled to 1200x720. -If source is 16:10, the screen type will be scaled to 1152x720.				

WXGA auto mapping rule (screen type 16:9):

Auto	Input resolution		Auto/Scale	
	H-resolution	V-resolution	1280	720
4:3	640	480	960	720
	800	600	960	720
	1024	768	960	720
	1280	1024	960	720
	1400	1050	960	720
	1600	1200	960	720
Wide Laptop	1280	720	1280	720
	1280	768	1200	720
	1280	800	1152	720
SDTV	720	576	1280	720
	720	480	1280	720
HDTV	1280	720	1280	720
	1920	1080	1280	720

1080P scaling table:

16 : 9 screen	480i/p	576i/p	1080i/p	720p	PC
4x3	Scale to 1440x1080.				
16x9	Scale to 1920x1080.				
LBX	Scale to 1920x1440, then get the central 1920x1080 image to display.				
Native mode	- 1:1 mapping centered. - No scaling will be made; the image is displayed with the resolution based on input source.				
Auto	-If auto format is selected, the screen type will automatically become 16:9 (1920x1080). -If source is 4:3, the screen type will be scaled to 1440x1080. -If source is 16:9, the screen type will be scaled to 1920x1080. -If source is 16:10, the screen type will be scaled to 1920x1200 and cut 1920x1080 area to display.				

1080P auto mapping rule:

Auto	Input resolution		Auto/Scale	
	H-resolution	V-resolution	1920	1080
4:3	640	480	1440	1080
	800	600	1440	1080
	1024	768	1440	1080
	1280	1024	1440	1080
	1400	1050	1440	1080
	1600	1200	1440	1080
Wide Laptop	1280	720	1920	1080
	1280	768	1800	1080
	1280	800	1728	1080
SDTV	720	576	1350	1080
	720	480	1620	1080
HDTV	1280	720	1920	1080
	1920	1080	1920	1080

Display edge mask menu

Edge Mask

Use this function to remove the video encoding noise on the edge of video source.

Display zoom menu

Zoom

Use to reduce or magnify an image on the projection screen.

Display image shift menu

Image Shift

Adjust the projected image position horizontally (H) or vertically (V).

Display keystone menu

Keystone

Adjust the image distortion caused by tilting the projector.

USING THE PROJECTOR

Audio menu

Audio mute menu

Mute

Use this option to temporarily turn off the sound.

- **On:** Choose the “On” to turn mute on.
- **Off:** Choose the “Off” to turn mute off.

Note: *“Mute” function affects both internal and external speaker volume.*

Audio volume menu

Volume

Adjust the audio volume level.

Audio audio input menu (Type 2)

Audio Input

Select the audio input port for the video sources as follows:

- **HDMI1/MHL:** Audio 1, Audio 2, or Default.
- **HDMI2:** Audio 1, Audio 2, or Default.
- **VGA1:** Audio 1 and Audio 2.
- **VGA2:** Audio 1 and Audio 2.
- **S-Video:** Audio 1 and Audio 2.
- **Video:** Audio 1 and Audio 2.

Setup menu

Setup projection menu

Projection

Select the preferred projection between front, rear, ceiling-top, and rear-top.

Setup screen type menu

Screen Type (for WXGA/WUXGA models only)

Choose the screen type from 16:9 and 16:10.

Setup lamp settings menu

Lamp Reminder

Choose this function to show or to hide the warning message when the changing lamp message is displayed. The message will appear 30 hours before suggested replacement of lamp.

Lamp Reset

Resets the lamp hour counter after replacing the lamp.

Setup filter settings menu

Optional Filter Installed

Set the warning message setting.

- **Yes:** Display warning message after 500 hours of use.

Note: *"Filter Usage Hours / Filter Reminder / Filter Reset" will only appear when "Optional Filter Installed" is "Yes".*

- **No:** Turn off warning message.

Filter Usage Hours

Display the filter time.

Filter Reminder

Choose this function to show or hide the warning message when the changing filter message is displayed. The available options include 300hr, 500hr, 800hr, and 1000hr.

Filter Reset

Reset the dust filter counter after replacing or cleaning the dust filter.

Setup power settings menu

Direct Power On

Choose "On" to activate Direct Power mode. The projector will automatically power on when AC power is supplied, without pressing the "Power" key on the projector keypad or on the remote control.

Signal Power On

Choose "On" to activate Signal Power mode. The projector will automatically power on when a signal is detected, without pressing the "Power" key on the projector Keypad or on the remote control.

Note: *If the "Signal Power On" option is turned "On", the power consumption of the projector in standby mode will be over 3W.*

Auto Power Off (min)

Sets the countdown timer interval. The countdown timer will start, when there is no signal being sent to the projector. The projector will automatically power off when the countdown has finished (in minutes).

Sleep Timer (min)

Configure the sleep timer.

- **Sleep Timer (min):** Sets the countdown timer interval. The countdown timer will start, with or without a signal being sent to the projector. The projector will automatically power off when the countdown has finished (in minutes).

  Note: *The Sleep Timer is reset every time when the projector is powered off.*

- **Always On:** Check to set the sleep timer always on.

Quick Resume

Set the quick resume setting.

- **On:** If the projector is accidentally turned off, this feature allows the projector to be instantly powered on again, if selected within a period of 100 seconds.
- **Off:** The fan will start cooling the system after 10 seconds when user turns off the projector.

Power Mode (Standby)

Set the power mode setting.

- **Active:** Choose "Active" to return to normal standby.
- **Eco:** Choose "Eco." to save power dissipation further < 0.5W.

Note: *The fans will still run in active standby if "Signal Power On" is enabled.*

USB Power

Set the USB power settings.

- **On:** The projector is always powered on by a USB power source.
- **Off:** The USB Power function is off.
- **Auto:** The projector is automatically powered on by a USB power source.

Wireless (Type 2)

Set this function “On” to allow the projector to be turned on over the wireless network.

Setup security menu

Security

Enable this function to prompt for a password before using the projector.

- **On:** Choose “On” to use security verification when the turning on the projector.
- **Off:** Choose “Off” to be able to switch on the projector without password verification.

Security Timer

Can be select the time (Month/Day/Hour) function to set the number of hours the projector can be used. Once this time has elapsed you will be requested to enter your password again.

Change Password

Use to set or modify the password that is prompted when turning the projector on.

Setup HDMI link settings menu

Note:

- *When you connect HDMI CEC-compatible devices to the projector with HDMI cables, you can control them on the same power on or power off status using the HDMI Link control feature in the projector’s OSD. This lets one device or multiple devices in a group power on or power off via HDMI Link Feature in a typical configuration, your DVD player may be connected to the projector through an amplifier or home theater system.*

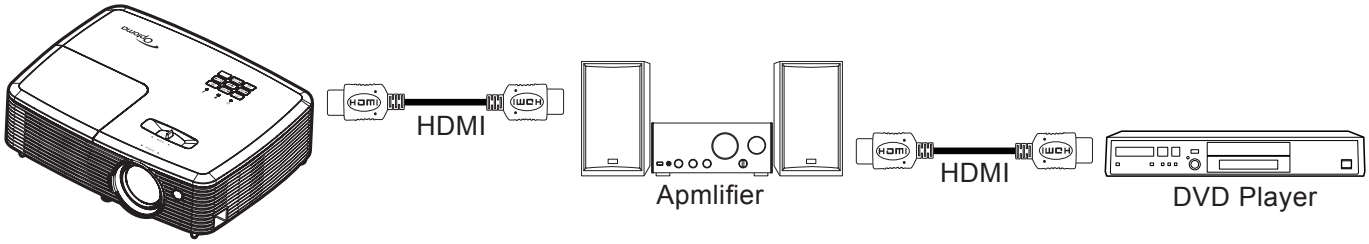

HDMI Link

Enable/disable the HDMI Link function. The inclusive TV, power on link, and power off link options will only available if the setting is set to “On”.

Inclusive of TV

Set to “Yes” if you prefer both TV and projector to be automatically turned off at the same time. To prevent both devices to be turned off at the same time, set the setting to “No”.

Power On Link

CEC power on command.

- **Mutual:** Both projector and CEC device will be turned on simultaneously.
- **PJ -> Device:** The CEC device will be turned on only after the projector is switched on.
- **Device -> PJ:** The projector will be switched on only after the CEC device is turned on.

Power Off Link

Enable this function to let both HDMI Link and projector to be automatically turned off at the same time.

Setup test pattern menu

Test Pattern

Select the test pattern from green grid, magenta grid, white grid, white or disable this function (off).

Setup remote settings menu

IR Function

Set the IR function setting.

- **On:** Choose “On”, the projector can be operated by the remote control from top IR receiver.
- **Off:** Choose “Off”, the projector can’t be operated by the remote control. By selecting “Off”, you will be able to use the Keypad keys.

User1/ User2/ User3 (Type 1)

Assign the default function for User1, User2, or User3 between HDMI 2, test pattern, brightness, contrast, sleep timer, color matching, color temp, gamma, projection, lamp settings, zoom, freeze, and MHL.

User1/ User2/ User3 (Type 2)

Assign the default function for User1, User2, or User3 between HDMI 2, VGA 2, test pattern, LAN, brightness, contrast, sleep timer, color matching, color temp, gamma, projection, lamp settings, zoom, freeze, and MHL.

Setup projector ID menu

Projector ID

ID definition can be set up by menu (range 0-99), and allow user control an individual projector by using RS232 command.

Setup options menu

Language

Select the multilingual OSD menu between English, German, French, Italian, Spanish, Portuguese, Polish, Dutch, Swedish, Norwegian/Danish, Finnish, Greek, traditional Chinese, simplified Chinese, Japanese, Korean, Russian, Hungarian, Czechoslovak, Arabic, Thai, Turkish, Farsi, Vietnamese, Indonesian, Romanian, and Slovakian.

Closed Captioning

Closed Captioning is a text version of the program sound or other information displayed on the screen. If the input signal contains closed captions, you can turn on the feature and watch the channels. The available options include “Off”, “CC1”, and “CC2”.

Menu Settings

Set the menu location on the screen and configure menu timer settings.

- **Menu Location**: Select the menu location on the display screen.
- **Menu Timer**: Set the duration where the OSD menu stays visible on the screen.

Auto Source

If you set this option “On” and press the button on the projector keypad or button on the remote control then the next available input source is selected automatically. Set “Off” to disable auto source function.

Input Source (Type 1)

Select the input source between HDMI1/MHL, HDMI2, VGA, and Video.

Input Source (Type 2)

Select the input source between HDMI1/MHL, HDMI2, VGA1, VGA2, S-Video, and Video.

Input Name (Type 1)

Use to rename the input function for easier identification. The available options include HDMI1/MHL, HDMI2, VGA, and Video.

Input Name (Type 2)

Use to rename the input function for easier identification. The available options include HDMI1/MHL, HDMI2, VGA1, VGA2, S-Video, and Video.

High Altitude

When “On” is selected, the fans will spin faster. This feature is useful in high altitude areas where the air is thin.

Display Mode Lock

Choose “On” or “Off” to lock or unlock adjusting display mode settings.

Keypad Lock

When the keypad lock function is “On”, the Keypad will be locked. However, the projector can be operated by the remote control. By selecting “Off”, you will be able to reuse the Keypad.

Information Hide

Enable this function to hide the information message.

- **Off:** Choose “On” to hide the info message.
- **On:** Choose “Off” to show the “searching” message.

Logo

Use this function to set the desired startup screen. If changes are made, they will take effect the next time the projector is powered on.

- **Default:** The default startup screen.
- **Neutral:** Logo is not displayed on startup screen.

Background Color

Use this function to display a blue, red, green, grey color, none, or logo screen when no signal is available.

Note: *If the background color is set to “None”, then the background color is black.*

Setup reset menu

Reset OSD

Return the factory default settings for OSD menu settings.

Reset to Default

Return the factory default settings for Setup menu settings.

Network menu (Type 2)

Network LAN menu

Network Status

Display the network connection status (read-only).

MAC Address

Display the MAC address (read-only).

DHCP

Use this option to enable or disable the DHCP function.

- **On**: Projector will obtain an IP address automatically from your network.
- **Off**: To assign IP, subnet mask, gateway, and DNS configuration manually.

Note: *Exiting OSD will automatically apply the entered values.*

IP Address

Display the IP address.

Subnet Mask

Display subnet mask number.

Gateway

Display the default gateway of the network connected to the projector.

DNS

Display the DNS number.

How to use web browser to control your projector

1. Turn “On” the DHCP option on projector to allow a DHCP server to automatically assign an IP address.
2. Open the web browser in your PC and type in the projector’s IP address (“Network > LAN > IP Address”).
3. Enter the user name and password, and click “Login”.
   The projector’s configuration web interface opens.

Note:

- *The default user name and password is “admin”.*
- *The steps in this section is based on Windows 7 operating system.*

Making a direct connection from your computer to the projector*

1. Turn “Off” the DHCP option on the projector.
2. Configure the IP address, Subnet Mask, Gateway, and DNS on projector (“Network > LAN”).
3. Open ***Network and Sharing Center*** page on your PC, and assign the identical network parameters to your PC as set on projector. Click “OK” to save the parameters.

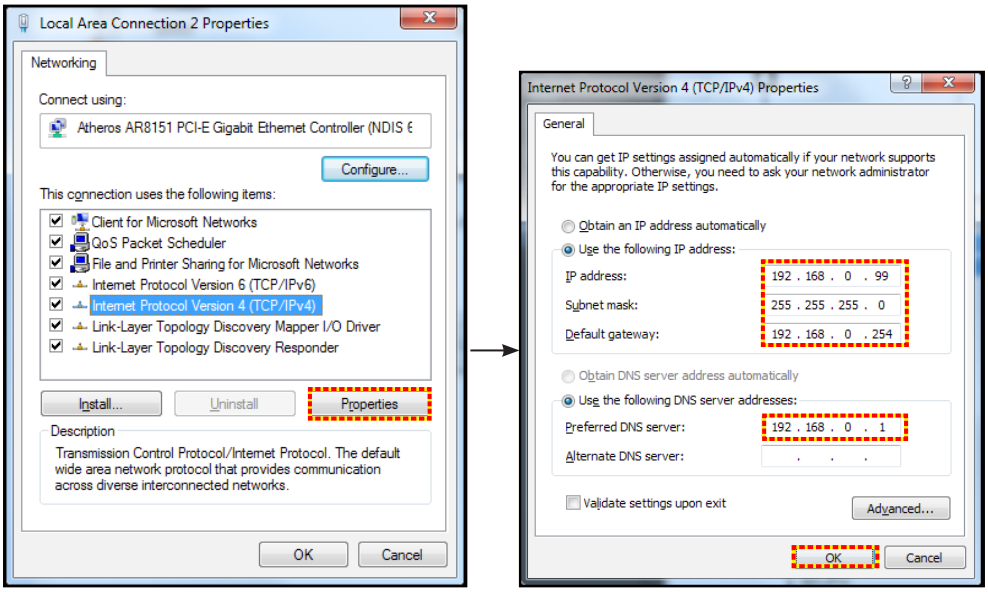

4. Open the web browser on your PC and type in to the URL field the IP address, assigned in step 3. Then press “Enter” key.

Reset

Reset all values for LAN parameters.

Network control menu

Crestron

Use this function to select the network function (port: 41794).

For more information, please visit http://www.crestron.com and www.crestron.com/getroomview.

Extron

Use this function to select the network function (port: 2023).

PJ Link

Use this function to select the network function (port: 4352).

AMX Device Discovery

Use this function to select the network function (port: 9131).

Telnet

Use this function to select the network function (port: 23).

HTTP

Use this function to select the network function (port: 80).

USING THE PROJECTOR

Setup network control settings menu

LAN_RJ45 function

For simplicity and ease of operation, the projector provides diverse networking and remote management features. The LAN / RJ45 function of the projector through a network, such as remotely manage: Power On / Off, brightness, and contrast settings. Also, you can view the projector status information, such as: Video- Source, Sound-Mute, etc.

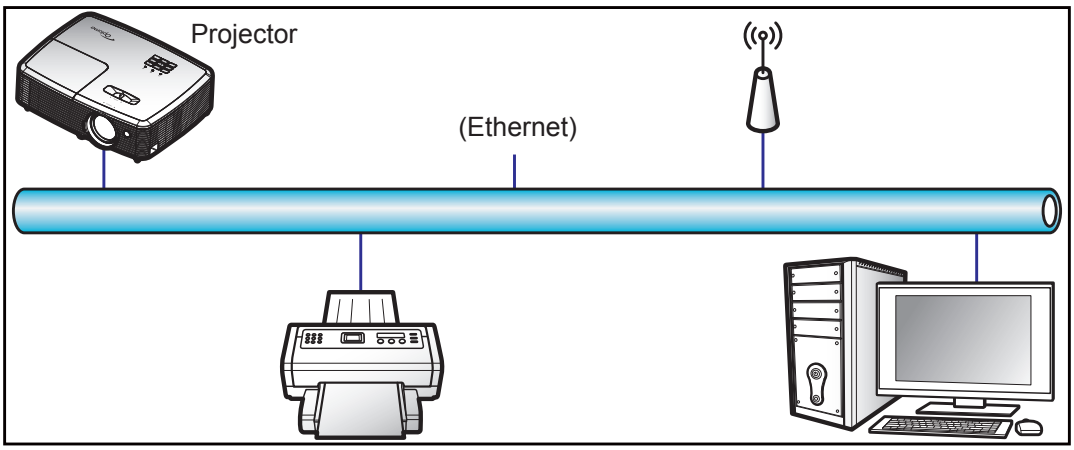

Wired LAN terminal functionalities

This projector can be controlled by using a PC (laptop) or other external device via LAN / RJ45 port and compatible with Crestron / Extron / AMX (Device -Discovery) / PJLink.

- Crestron is a registered trademark of Crestron Electronics, Inc. of the United States.
- Extron is a registered trademark of Extron Electronics, Inc. of the United States.
- AMX is a registered trademark of AMX LLC of the United States.
- PJLink applied for trademark and logo registration in Japan, the United States of America, and other countries by JBMIA.

The projector is supported by the specified commands of the Crestron Electronics controller and related software, for example RoomView®.

http://www.crestron.com/

This projector is compliant to support Extron device(s) for reference.

http://www.extron.com/

This projector is supported by AMX (Device Discovery).

http://www.amx.com/

This projector supports all commands of PJLink Class1 (Version 1.00).

http://pjlink.jbmia.or.jp/english/

For more detailed information about the various types of external devices which can be connected to the LAN / RJ45 port and remote control the projector, as well as the supported commands for these external devices, please contact the Support-Service directly.

USING THE PROJECTOR

LAN RJ45

1. Connect an RJ45 cable to RJ45 ports on the projector and the PC (laptop).

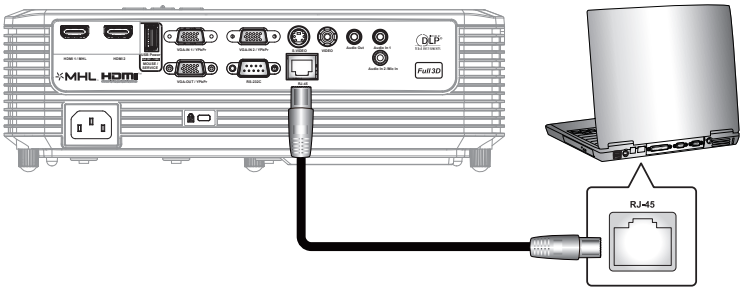

2. On the PC (Laptop), select **Start** > **Control Panel** > **Network Connections**.

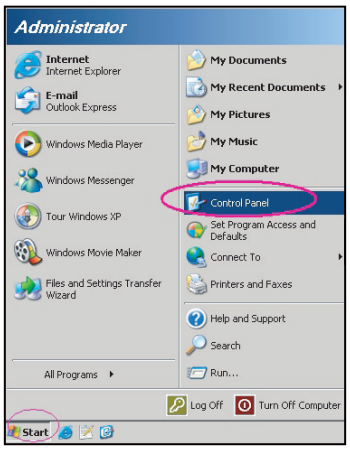

3. Right-click on the L**ocal Area Connection**, and select **Property**.

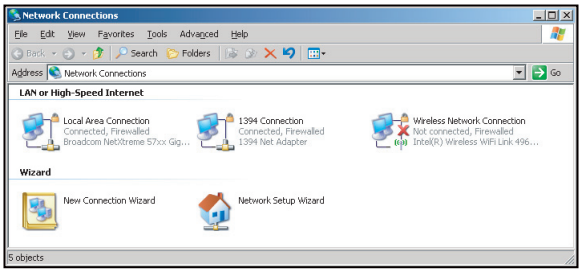

4. In the **Properties** window, select the **General tab**, and select **Internet Protocol (TCP / IP)**.

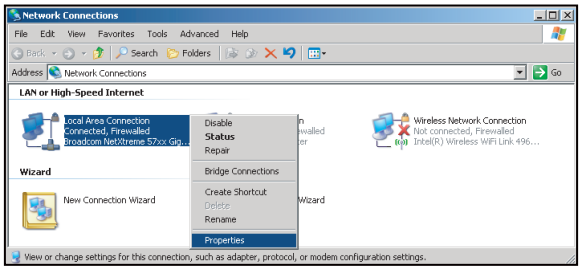

5. Click “Properties”.

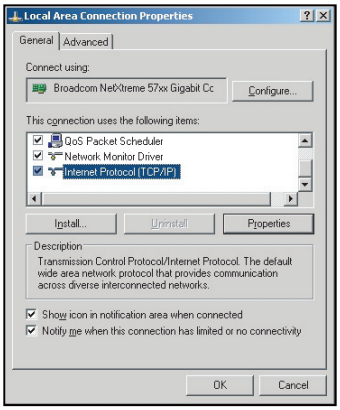

6. Type in the IP address and Subnet mask, then press “OK”.

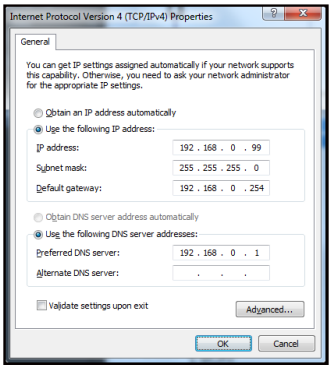

7. Press the “Menu” button on the projector.
8. Open on projector **Network** > **LAN**.
9. Enter the following connection parameters:
   – DHCP: Off
   – IP Address: 192.168.0.100
   – Subnet Mask: 255.255.255.0
   – Gateway: 192.168.0.254
   – DNS: 192.168.0.1
10. Press “Enter” to confirm settings.
11. Open a web browser, for example Microsoft Internet Explorer with Adobe Flash Player 9.0 or higher installed.
12. In the Address bar, input the projector’s IP address: 192.168.0.100.

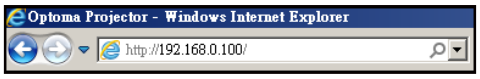

13. Press “Enter”.

USING THE PROJECTOR

The projector is setup for remote management. The LAN / RJ45 function displays as follows:

Information page

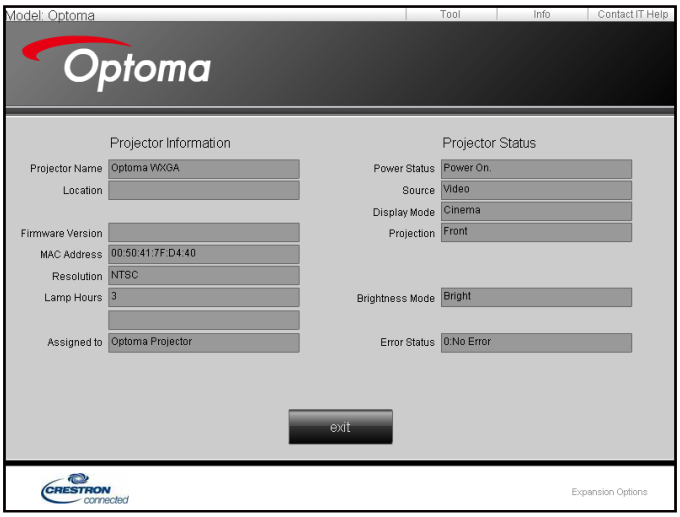

Main page

Tool page

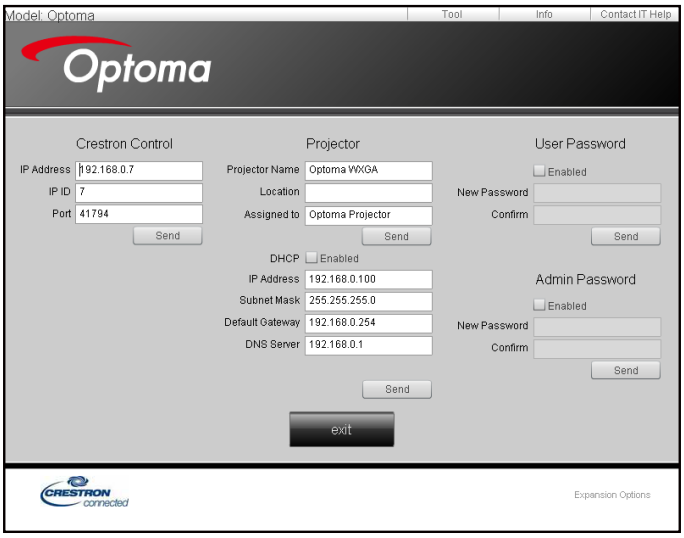

Contact IT helpdesk

RS232 by Telnet Function

There is alternative RS232 command control way, in projector so called “RS232 by TELNET” for LAN / RJ45 interface.

Quick Start-Guide for “RS232 by Telnet”

- Check and get the IP address on OSD of the projector.
- Make sure that the PC / laptop can access the web-page of the projector.
- Make sure that “Windows Firewall” setting is set disabled in case of “TELNET” function filtering out by PC / laptop.

.

1. Select **Start** > **All Programs**.> **Accessories** > **Command Prompt**.

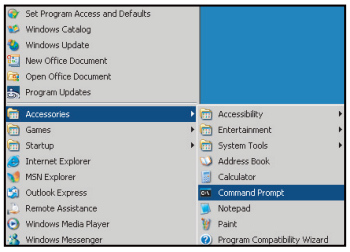

2. Input the command format as follows:
   – telnet ttt.xxx.yyy.zzz 23 (“Enter” key pressed)
   – (ttt.xxx.yyy.zzz: IP-Address of the projector)
3. If Telnet-Connection ready, and user can have RS232 command input, then “Enter” key pressed, the RS232 command will be workable.

Specification for “RS232 by TELNET”:

1. Telnet: TCP.
2. Telnet port: 23 (for more detail, kindly please get contact with the service agent or team).
3. Telnet utility: Windows “TELNET.exe” (console mode).
4. Disconnection for RS232-by-Telnet control normally: Close
5. Windows Telnet utility directly after TELNET connection ready.
   – Limitation 1 for Telnet-Control: there is less than 50 bytes for successive network payload for Telnet-Control application.
   – Limitation 2 for Telnet-Control: there is less than 26 bytes for one complete RS232 command for Telnet-Control.
   – Limitation 3 for Telnet-Control: Minimum delay for next RS232 command must be more than 200 (ms).

USING THE PROJECTOR

Info menu

Info menu (Type 1)

View the projector information as listed below:

- Regulatory
- Serial Number
- Source
- Resolution
- Refresh Rate
- Display Mode
- Power mode(standby)
- Lamp Hours
- Projector ID
- Filter Usage Hours
- Brightness Mode
- FW Version

Info menu (Type 2)

View the projector information as listed below:

- Regulatory
- Serial Number
- Source
- Resolution
- Refresh Rate
- Display Mode
- Power Mode (Standby)
- Lamp Hours
- Network Status
- IP Address
- Projector ID
- Filter Usage Hours
- Brightness Mode
- FW Version

MAINTENANCE

Replacing the lamp

The projector automatically detects the lamp life. When the lamp life is nearing the end of use, a warning message will appear on the screen.

When you see this message, please contact your local reseller or service center to change the lamp as soon as possible. Make sure the projector has been cooled down for at least 30 minutes before changing the lamp.

Warning: If ceiling mounted, please use caution when opening the lamp access panel. It is recommended to wear safety glasses if changing the bulb when ceiling mounted. Caution must be used to prevent any loose parts from falling out of projector.

Warning: Lamp compartment is hot! Allow it to cool down before changing lamp!

Warning: To reduce the risk of personal injury, do not drop the lamp module or touch the lamp bulb. The bulb may shatter and cause injury if it is dropped.

MAINTENANCE

Replacing the lamp (continued)

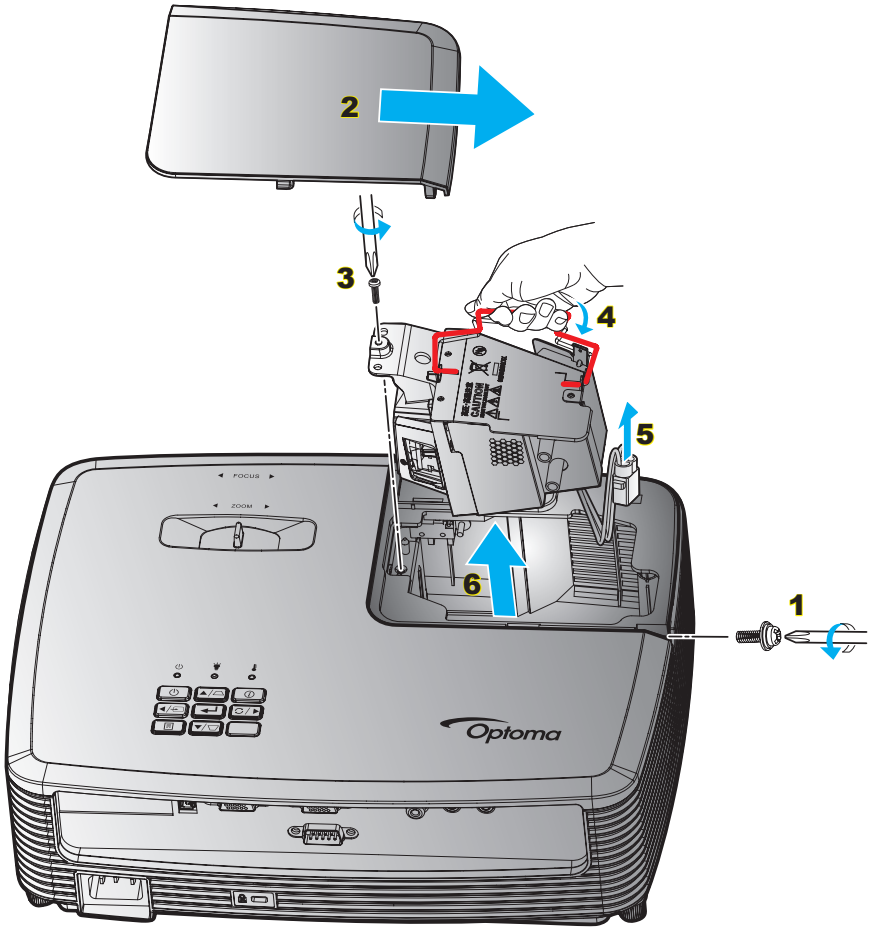

Procedure:

1. Switch off the power to the projector by pressing the "⏻" button on the remote control or the projector keypad.
2. Allow the projector to cool down for at least 30 minutes.
3. Disconnect the power cord.
4. Unscrew the screw on the cover. 1
5. Remove the cover. 2
6. Unscrew the screw on the lamp module. 3
7. Lift up the lamp handle. 4
8. Remove the lamp cord. 5
9. Remove the lamp module carefully. 6
10. To replace the lamp module, reverse the previous steps.
11. Turn on the projector and reset the lamp timer.
12. Lamp Reset: (i) Press "Menu" → (ii) Select "Setup" → (iii) Select "Lamp Settings" → (iv) Select "Lamp Reset" → (v) Select "Yes".

Note:

- *The screw on the lamp cover and the lamp cannot be removed.*
- *The projector cannot be turned on if the lamp cover has not been placed back on the projector.*
- *Do not touch the glass area of the lamp. Hand oil can cause the lamp shatter. Use a dry cloth to clean the lamp module if it was accidentally touched.*

MAINTENANCE

Installing and cleaning the dust filter

Installing the dust filter

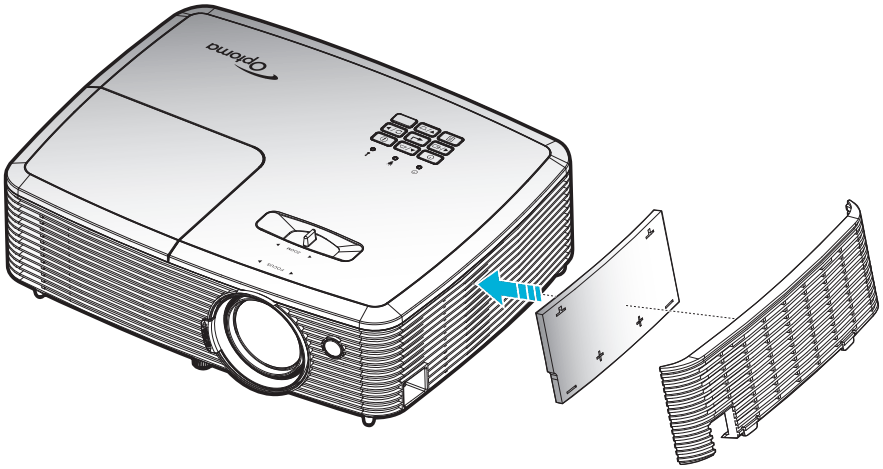

Note: *Dust filters are only required/supplied in the selected regions with excessive dust.*

Cleaning the dust filter

We recommend you to clean the dust filter every three months. Clean it more often if the projector is used in a dusty environment.

Procedure:

1. Switch off the power to the projector by pressing the "⏻" button on the remote control or the projector keypad.
2. Disconnect the power cord.
3. Remove the dust filter carefully. 1
4. Clean or replace the dust filter. 2
5. To install the dust filter, reverse the previous steps.

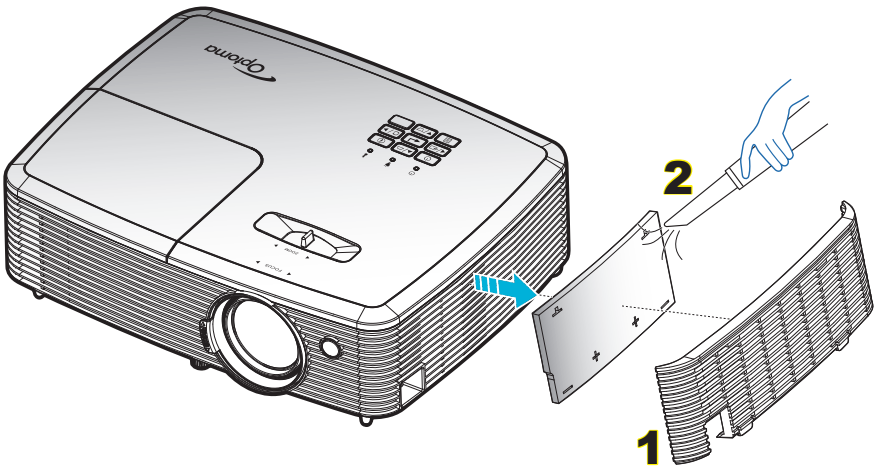

ADDITIONAL INFORMATION

Compatible resolutions

Digital compatibility

B0/Established Timing	B0/Standard Timing	B0/Detail Timing	B1/Video Mode	B1/Detail Timing
720x400 @ 70Hz	SVGA:	Native timing:	640x480p @ 60Hz	720x480p @ 60Hz
640x480 @ 60Hz	800x600 @ 120Hz	XGA: 1024x768 @ 60Hz	720x480p @ 60Hz	1280x720p @ 60Hz
640x480 @ 67Hz	1024x768 @ 120Hz	WXGA: 1280x800 @ 60Hz; 1280x720 @ 60Hz	1280x720p @ 60Hz	1366x768 @ 60Hz
640x480 @ 72Hz	1280x800 @ 60Hz	1080P: 1920x1080 @ 60Hz	1920x1080i @ 60Hz	1920x1080i @ 50Hz
640x480 @ 75Hz	1280x1024 @ 60Hz		720(1440)x480i @ 60Hz	1920x1080p @ 60Hz
800x600 @ 56Hz	1680x1050 @ 60Hz		1920x1080p @ 60Hz	
800x600 @ 60Hz	1280x720 @ 60Hz		720x576p @ 50Hz	
800x600 @ 72Hz	1280x720 @ 120Hz		1280x720p @ 50Hz	
800x600 @ 75Hz	1600x1200 @ 60Hz		1920x1080i @ 50Hz	
832x624 @ 75Hz	XGA/WXGA:		720(1440)x576i @ 50Hz	
1024x768 @ 60Hz	1440x900 @ 60Hz		1920x1080p @ 50Hz	
1024x768 @ 70Hz	1024x768 @ 120Hz		1920x1080p @ 24Hz	
1024x768 @ 75Hz	1280x800 @ 60Hz		1920x1080p @ 30Hz	
1280x1024 @ 75Hz	1280x1024 @ 60Hz			
1152x870 @ 75Hz	1680x1050 @ 60Hz			
	1280x720 @ 60Hz			
	1280x720 @ 120Hz			
	1600x1200 @ 60Hz			
	1080P:			
	1280x720 @ 60Hz			
	1280x800 @ 60Hz			
	1280x1024 @ 60Hz			
	1400x1050 @ 60Hz			
	1600x1200 @ 60Hz			
	1440x900 @ 60Hz			
	1280x720 @ 120Hz			
	1024x768 @ 120Hz			

ADDITIONAL INFORMATION

Analog compatibility

B0/Established Timing	B0/Standard Timing	B0/Detail Timing	B1/Video Mode	B1/Detail Timing
720x400 @ 70Hz	SVGA:	Native timing:		1366x768 @ 60Hz
640x480 @ 60Hz	800x600 @ 120Hz	XGA: 1024x768 @ 60Hz		
640x480 @ 67Hz	1024x768 @ 120Hz	WXGA: 1280x800 @ 60Hz; 1280x720 @ 60Hz		
640x480 @ 72Hz	1280x800 @ 60Hz	1080P: 1920x1080 @ 60Hz		
640x480 @ 75Hz	1280x1024 @ 60Hz			
800x600 @ 56Hz	1680x1050 @ 60Hz			
800x600 @ 60Hz	1280x720 @ 60Hz			
800x600 @ 72Hz	1280x720 @ 120Hz			
800x600 @ 75Hz	1600x1200 @ 60Hz			
832x624 @ 75Hz	XGA/WXGA:			
1024x768 @ 60Hz	1440x900 @ 60Hz			
1024x768 @ 70Hz	1024x768 @ 120Hz			
1024x768 @ 75Hz	1280x800 @ 60Hz			
1280x1024 @ 75Hz	1280x1024 @ 60Hz			
1152x870 @ 75Hz	1680x1050 @ 60Hz			
	1280x720 @ 60Hz			
	1280x720 @ 120Hz			
	1600x1200 @ 60Hz			
	1080P:			
	1280x720 @ 60Hz			
	1280x800 @ 60Hz			
	1280x1024 @ 60Hz			
	1400x1050 @ 60Hz			
	1600x1200 @ 60Hz			
	1440x900 @ 60Hz			
	1280x720 @ 120Hz			
	1024x768 @ 120Hz			

ADDITIONAL INFORMATION

True 3D video compatibility

Input resolution	HDMI 1.4a 3D Input	Input timing		
		1280x720P @ 50Hz	Top - and - Bottom	
		1280x720P @ 60Hz	Top - and - Bottom	
		1280x720P @ 50Hz	Frame packing	
		1280x720P @ 60Hz	Frame packing	
		1920x1080i @ 50 Hz	Side- by-Side (Half)	
		1920x1080i @ 60 Hz	Side- by-Side (Half)	
		1920x1080P @ 24 Hz	Top - and- Bottom	
		1920x1080P @ 24 Hz	Frame packing	
	HDMI 1.3	1920x1080i @ 50Hz	Side-by-Side(Half)	SBS mode is on
		1920x1080i @ 60Hz		
		1280x720P @ 50Hz		
		1280x720P @ 60Hz		
		800 x 600 @ 60Hz		
		1024 x 768 @ 60Hz		
		1280 x 800 @ 60Hz		
		1920x1080i @ 50Hz	Top-and-Bottom	TAB mode is on
		1920x1080i @ 60Hz		
		1280x720P @ 50Hz		
		1280x720P @ 60Hz		
		800x600 @ 60Hz		
		1024x768 @ 60Hz		
		1280x800 @ 60Hz		
		480i	HQFS	3D format is Frame sequential

Note:

- *If 3D input is 1080p@24hz, the DMD should replay with integral multiple with 3D mode.*
- *Support NVIDIA 3DTV Play if there is no patent fee from Optoma. 1080i@25hz and 720p@50hz will run in 100 hz; other 3D timing will run in 120hz.*
- *1080p@24hz will run in 144Hz.*

ADDITIONAL INFORMATION

Image size and projection distance

Type 1:

XGA

Diagonal Length Size of (16:9) Screen	Screen Size W x H				Projection Distance (D)				Offset (Hd)	
	(m)		(inch)		(m)		(feet)			
	Width	Height	Width	Height	Wide	Tele	Wide	Tele	(m)	(inch)
36	0.73	0.55	28.80	21.6	1.4	1.6	4.59	5.25	0.08	3.15
40	0.81	0.61	32.00	24	1.6	1.8	5.25	5.91	0.09	3.54
50	1.02	0.76	40.00	30	2.0	2.2	6.56	7.22	0.12	4.72
60	1.22	0.91	48.00	36	2.4	2.6	7.87	8.53	0.14	5.51
70	1.42	1.07	56.00	42	2.8	3.1	9.19	10.17	0.16	6.30
80	1.63	1.22	64.00	48	3.2	3.5	10.50	11.48	0.18	7.09
90	1.83	1.37	72.00	54	3.5	4.0	11.48	13.12	0.21	8.27
100	2.03	1.52	80.00	60	3.9	4.4	12.80	14.44	0.23	9.06
120	2.44	1.83	96.00	72	4.7	5.3	15.42	17.39	0.27	10.63
150	3.05	2.29	120.00	90	5.9	6.6	19.36	21.65	0.34	13.39
180	3.66	2.74	144.00	108	7.1	7.9	23.29	25.92	0.41	16.14
200	4.06	3.05	160.00	120	7.9	8.8	25.92	28.87	0.46	18.11
250	5.08	3.81	200.00	150	9.9	11.0	32.48	36.09	0.57	22.44
300	6.10	4.57	240.00	180	11.8	13.2	38.71	43.31	0.69	27.17

Note: *Zoom ratio is 1.1x.*

WXGA

Diagonal Length Size of (16:9) Screen	Screen Size W x H				Projection Distance (D)				Offset (Hd)	
	(m)		(inch)		(m)		(feet)			
	Width	Height	Width	Height	Wide	Tele	Wide	Tele	(m)	(inch)
36	0.78	0.48	30.53	19.08	1.2	1.3	3.94	4.27	0.06	2.36
40	0.86	0.54	33.92	21.2	1.3	1.5	4.27	4.92	0.06	2.36
50	1.08	0.67	42.40	26.5	1.7	1.8	5.58	5.91	0.08	3.15
60	1.29	0.81	50.88	31.8	2.0	2.2	6.56	7.22	0.09	3.54
70	1.51	0.94	59.36	37.1	2.3	2.6	7.55	8.53	0.12	4.72
80	1.72	1.08	67.84	42.4	2.7	2.9	8.86	9.51	0.13	5.12
90	1.94	1.21	76.32	47.7	3.0	3.3	9.84	10.83	0.15	5.91
100	2.15	1.35	84.80	53	3.3	3.7	10.83	12.14	0.16	6.30
120	2.58	1.62	101.76	63.6	4.0	4.4	13.12	14.44	0.19	7.48
150	3.23	2.02	127.20	79.5	5.0	5.5	16.40	18.04	0.24	9.45
180	3.88	2.42	152.64	95.4	6.0	6.6	19.69	21.65	0.29	11.42
200	4.31	2.69	169.60	106	6.7	7.3	21.98	23.95	0.33	12.99
250	5.38	3.37	212.00	132.5	8.3	9.2	27.23	30.18	0.40	15.75
300	6.46	4.04	254.40	159	10.0	11.0	32.81	36.09	0.48	18.90

Note: *Zoom ratio is 1.1x.*

ADDITIONAL INFORMATION

1080P

Diagonal Length Size of (16:9) Screen	Screen Size W x H				Projection Distance (D)				Offset (Hd)	
	(m)		(inch)		(m)		(feet)			
	Width	Height	Width	Height	Wide	Tele	Wide	Tele	(m)	(inch)
36	0.80	0.45	31.38	17.65	1.2	1.3	3.94	4.27	0.07	2.76
40	0.89	0.5	34.86	19.6	1.3	1.4	4.27	4.59	0.08	3.15
50	1.11	0.62	43.58	24.5	1.6	1.8	5.25	5.91	0.10	3.94
60	1.33	0.75	52.29	29.4	2.0	2.2	6.56	7.22	0.12	4.72
70	1.55	0.87	61.01	34.3	2.3	2.5	7.55	8.20	0.14	5.51
80	1.77	1	69.73	39.2	2.6	2.9	8.53	9.51	0.16	6.30
90	1.99	1.12	78.44	44.1	2.9	3.2	9.51	10.50	0.18	7.09
100	2.21	1.25	87.16	49	3.3	3.6	10.83	11.81	0.19	7.48
120	2.66	1.49	104.59	58.8	3.9	4.3	12.80	14.11	0.24	9.45
150	3.32	1.87	130.74	73.5	4.9	5.4	16.08	17.72	0.30	11.81
180	3.98	2.24	156.88	88.2	5.9	6.5	19.36	21.33	0.36	14.17
200	4.43	2.49	174.32	98.1	6.6	7.2	21.65	23.62	0.40	15.75
250	5.53	3.11	217.89	122.6	8.2	9.0	26.90	29.53	0.50	19.69
300	6.64	3.74	261.47	147.1	9.8	10.8	32.15	35.43	0.59	23.23

Note: *Zoom ratio is 1.1x.*

Type 2:

XGA

Diagonal Length Size of (16:9) Screen	Screen Size W x H				Projection Distance (D)				Offset (Hd)	
	(m)		(inch)		(m)		(feet)			
	Width	Height	Width	Height	Wide	Tele	Wide	Tele	(m)	(inch)
36	0.73	0.55	28.80	21.6	1.1	1.4	3.61	4.59	0.08	3.15
40	0.81	0.61	32.00	24	1.2	1.6	3.94	5.25	0.09	3.54
50	1.02	0.76	40.00	30	1.5	2.0	4.92	6.56	0.12	4.72
60	1.22	0.91	48.00	36	1.8	2.4	5.91	7.87	0.14	5.51
70	1.42	1.07	56.00	42	2.1	2.7	6.89	8.86	0.16	6.30
80	1.63	1.22	64.00	48	2.4	3.1	7.87	10.17	0.18	7.09
90	1.83	1.37	72.00	54	2.7	3.5	8.86	11.48	0.21	8.27
100	2.03	1.52	80.00	60	3.0	3.9	9.84	12.80	0.23	9.06
120	2.44	1.83	96.00	72	3.6	4.7	11.81	15.42	0.27	10.63
150	3.05	2.29	120.00	90	4.5	5.9	14.76	19.36	0.34	13.39
180	3.66	2.74	144.00	108	5.4	7.1	17.72	23.29	0.41	16.14
200	4.06	3.05	160.00	120	6.0	7.8	19.69	25.59	0.46	18.11
250	5.08	3.81	200.00	150	7.6	9.8	24.93	32.15	0.57	22.44
300	6.10	4.57	240.00	180	9.1	11.8	29.86	38.71	0.69	27.17

Note: *Zoom ratio is 1.3x.*

ADDITIONAL INFORMATION

WXGA

Diagonal Length Size of (16:9) Screen	Screen Size W x H				Projection Distance (D)				Offset (Hd)	
	(m)		(inch)		(m)		(feet)			
	Width	Height	Width	Height	Wide	Tele	Wide	Tele	(m)	(inch)
36	0.78	0.48	30.53	19.08	0.9	1.2	2.95	3.94	0.06	2.36
40	0.86	0.54	33.92	21.2	1.0	1.3	3.28	4.27	0.07	2.76
50	1.08	0.67	42.40	26.5	1.3	1.7	4.27	5.58	0.09	3.54
60	1.29	0.81	50.88	31.8	1.5	2.0	4.92	6.56	0.10	3.94
70	1.51	0.94	59.36	37.1	1.8	2.3	5.91	7.55	0.12	4.72
80	1.72	1.08	67.84	42.4	2.0	2.7	6.56	8.86	0.13	5.12
90	1.94	1.21	76.32	47.7	2.3	3.0	7.55	9.84	0.15	5.91
100	2.15	1.35	84.80	53	2.6	3.3	8.53	10.83	0.16	6.30
120	2.58	1.62	101.76	63.6	3.1	4.0	10.17	13.12	0.20	7.87
150	3.23	2.02	127.20	79.5	3.8	5.0	12.47	16.40	0.25	9.84
180	3.88	2.42	152.64	95.4	4.6	6.0	15.09	19.69	0.30	11.81
200	4.31	2.69	169.60	106	5.1	6.7	16.73	21.98	0.34	13.39
250	5.38	3.37	212.00	132.5	6.4	8.3	21.00	27.23	0.41	16.14
300	6.46	4.04	254.40	159	7.7	10.0	25.26	32.81	0.50	19.69

Note: *Zoom ratio is 1.3x.*

1080P

Diagonal Length Size of (16:9) Screen	Screen Size W x H				Projection Distance (D)				Offset (Hd)	
	(m)		(inch)		(m)		(feet)			
	Width	Height	Width	Height	Wide	Tele	Wide	Tele	(m)	(inch)
36	0.80	0.45	31.38	17.65	0.9	1.2	2.95	3.94	0.07	2.76
40	0.89	0.5	34.86	19.6	1.0	1.3	3.28	4.27	0.08	3.15
50	1.11	0.62	43.58	24.5	1.3	1.6	4.27	5.25	0.10	3.94
60	1.33	0.75	52.29	29.4	1.5	2.0	4.92	6.56	0.12	4.72
70	1.55	0.87	61.01	34.3	1.8	2.3	5.91	7.55	0.14	5.51
80	1.77	1	69.73	39.2	2.0	2.6	6.56	8.53	0.16	6.30
90	1.99	1.12	78.44	44.1	2.3	2.9	7.55	9.51	0.18	7.09
100	2.21	1.25	87.16	49	2.5	3.3	8.20	10.83	0.19	7.48
120	2.66	1.49	104.59	58.8	3.0	3.9	9.84	12.80	0.24	9.45
150	3.32	1.87	130.74	73.5	3.8	4.9	12.47	16.08	0.30	11.81
180	3.98	2.24	156.88	88.2	4.5	5.9	14.76	19.36	0.36	14.17
200	4.43	2.49	174.32	98.1	5.0	6.5	16.40	21.33	0.40	15.75
250	5.53	3.11	217.89	122.6	6.3	8.1	20.67	26.57	0.50	19.69
300	6.64	3.74	261.47	147.1	7.5	9.8	24.61	32.15	0.59	23.23

Note: *Zoom ratio is 1.3x.*

ADDITIONAL INFORMATION

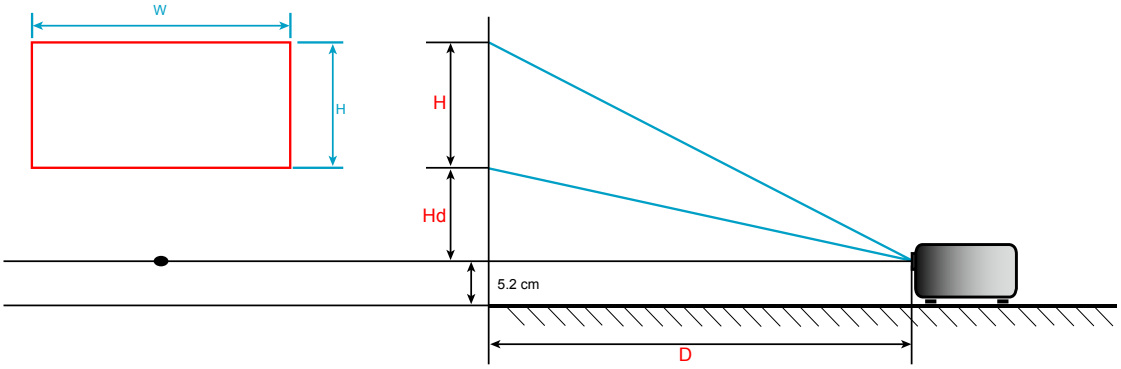

ADDITIONAL INFORMATION

Projector dimensions and ceiling mount installation

1. To prevent damage to your projector, please use the Optoma ceiling mount.
2. If you wish to use a third party ceiling mount kit, please ensure the screws used to attach a mount to the projector meet the following specifications:

- Screw type: M4*3
- Minimum screw length: 10mm

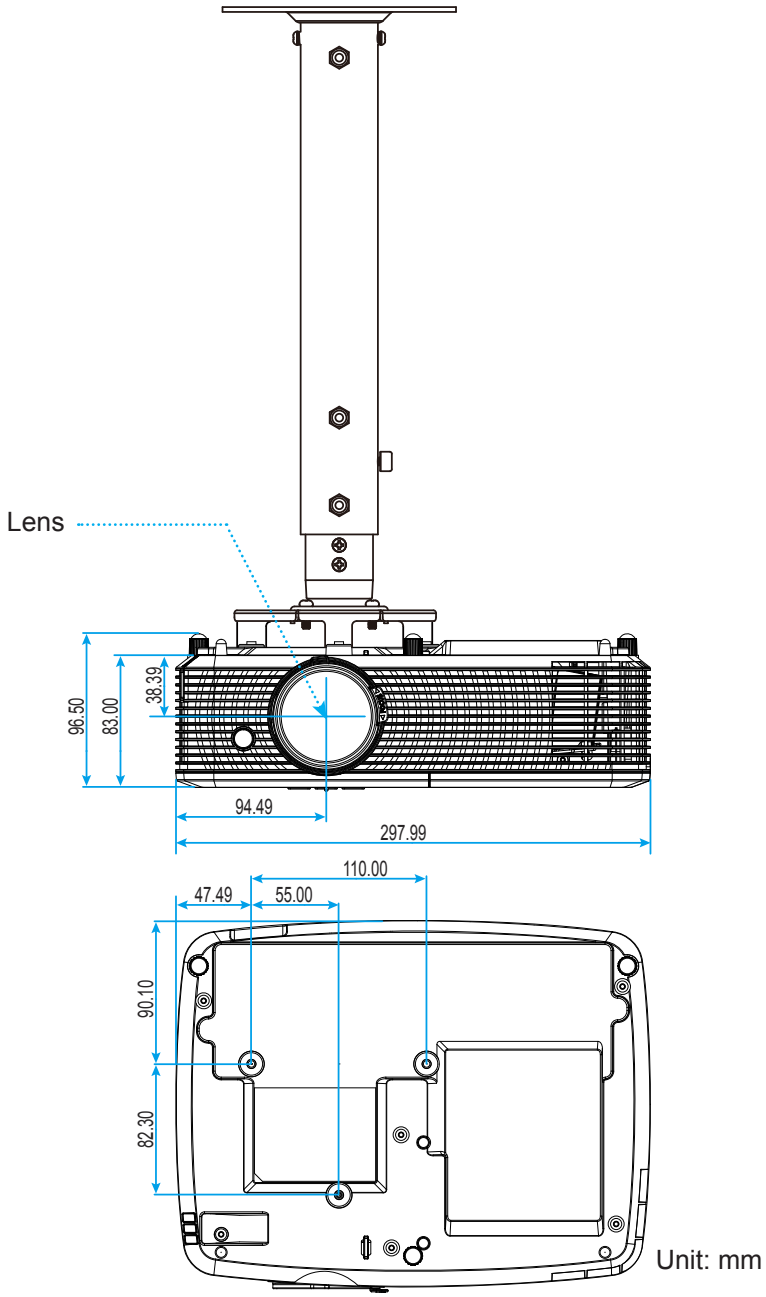

Note: *Please note that damage resulting from incorrect installation will void the warranty.*

Warning:

- If you buy a ceiling mount from another company, please be sure to use the correct screw size. Screw size will vary depending on the thickness of the mounting plate.
- Be sure to keep at least 10 cm gap between the ceiling and the bottom of the projector.
- Avoid installing the projector near a heat source.

ADDITIONAL INFORMATION

IR remote control 1 codes

Key legend		Description	Key code
Power		Press to turn on / off the projector.	81
Freeze	Freeze	Press to freeze the projector image.	8B
Aspect		Press to change aspect ratio of a displayed image.	98
AV mute		Press to turn off/ on projector built-in speaker	8A
Keystone+/up	Keystone+	• Press to adjust image distortion caused by tilting the projector. • Press to navigate up.	C6
Mute		Press to momentarily turn off / on the audio.	92
Left/Vol-	Vol–	• Press to adjust to decrease the volume. • Press to navigate left.	C8
Enter		Confirm your item selection.	-C5 (for OSD) -CA (for emulation of USB mouse via USB)
Right/Vol+	Vol+	• Press to adjust to increase the volume. • Press to navigate right.	C9
Menu		Press to display or exit the on-screen display menus for projector.	88
Down/ Keystone-	Keystone–	• Press to adjust image distortion caused by tilting the projector. • Press to navigate down.	C7
3D	3D	Press to manually select a 3D mode that matches your 3D content.	93
HDMI	HDMI	Press to choose HDMI source.	86

ADDITIONAL INFORMATION

Key legend		Description	Key code
VGA	VGA	Press to choose VGA source.	8E
Video	Video	Press to choose video source.	CE
Source		Press to select an input signal.	C3
Brightness mode		Press to automatically adjust the picture brightness to give an optimum contrast performance.	87
ReSync		Automatically synchronize the projector to the input source.	C4

ADDITIONAL INFORMATION

IR remote control 2 codes

Key		Key code	Printing-key definition	Description
Power	⏻	81	Power on/off	Press to turn on / off the projector.
Switch		3E	Switch	Press to switch the USB mouse on / off.
Display blank / audio mute		8A		Press to hide / unhide the screen picture and turn off / on audio.
Freeze		8B	Freeze	Press to freeze the projector image.
Mute		92		Press to momentarily turn off / on the audio.
Mouse left click	L	CB	L	Use as mouse left click.
Mouse right click	R	CC	R	Use as mouse right click.
Four directional select keys		C6	Up arrow	Use ▲ ▼ ◄ ► to select items or make adjustments to your selection.
		C8	Left arrow	
		C9	Right arrow	
		C7	Down arrow	

ADDITIONAL INFORMATION

Key		Key code	Printing-key definition	Description
Enter		C5	Enter	Confirm your item selection.
		CA	Enter	
Page -		C2	Page-	Press to page down.
Laser		N/A	Laser	Use as laser pointer.
Page +		C1	Page+	Press to page up.
V Keystone	⊖ ⊕	85	Keystone+	Press to adjust image distortion caused by tilting the projector.
		84	Keystone-	
Volume	⊖ ⊕	8C	Volume +	Press to adjust to increase / decrease the volume.
		8F	Volume -	
Aspect ratio / 1	⤢	98	⤢ / 1	• Press to change aspect ratio of a displayed image. • Use as numeric keypad number "1".
Menu / 2		88	Menu/2	• Press to display or exit the on-screen display menus for projector. • Use as numeric keypad number "2".
3D / 3		93	3D/3	• Press to manually select a 3D mode that matches your 3D content. • Use as numeric keypad number "3".
HDMI / 4		86	HDMI/4	• Press to choose HDMI source. • Use as numeric keypad number "4".
VGA / 5		D0	VGA/5	• Press to choose VGA source. • Use as numeric keypad number "5".
Video / 6		D1	Video/6	• Press to choose composite video source. • Use as numeric keypad number "6".
User1 / 7; User2 / 8; User3 / 9		D2	User 1/7	• User defined keys. Please see page *45* to setup. • Use as numeric keypad numbers "7", "8", and "9" accordingly.
		D3	User 2/8	
		D4	User 3/9	
Source		C3	Source	Press to select an input signal.
Brightness mode / 0	☀/☀	96	☀/☀ / 0	• Press to automatically adjust the picture brightness to give an optimum contrast performance. • Use as numeric keypad number "0".
Re-sync		C4	Re-Sync	Press to automatically synchronize the projector to the input source.

ADDITIONAL INFORMATION

Troubleshooting

If you experience a problem with your projector, please refer to the following information. If a problem persists, please contact your local reseller or service center.

Image problems

No image appears on-screen

- Ensure all the cables and power connections are correctly and securely connected as described in the "Installation" section.
- Ensure the pins of connectors are not crooked or broken.
- Check if the projection lamp has been securely installed. Please refer to the "Replacing the Lamp" section.
- Ensure that the "AV Mute" feature is not turned on.

Image is out of focus

- Adjust the Focus Ring on the projector lens.
- Make sure the projection screen is between the required distance from the projector. (Please refer to pages *68-71*).

The image is stretched when displaying 16:9 DVD title

- When you play anamorphic DVD or 16:9 DVD, the projector will show the best image in 16: 9 format on projector side.
- If you play the LBX format DVD title, please change the format as LBX in projector OSD.
- If you play 4:3 format DVD title, please change the format as 4:3 in projector OSD.
- Please setup the display format as 16:9 (wide) aspect ratio type on your DVD player.

Image is too small or too large

- Adjust the zoom lever on the top of the projector.
- Move the projector closer to or further from the screen.
- Press "Menu" on the projector panel, go to "Display-->Aspect Ratio". Try the different settings.

Image has slanted sides:

- If possible, reposition the projector so that it is centered on the screen and below the bottom of the screen.
- Use "Display-->Keystone" from the OSD to make an adjustment.

Image is reversed

- Select "Setup-->Projection" from the OSD and adjust the projection direction.

Blurry double image

- Press "3D" button and switch to "Off" to avoid normal 2D image is blurry double image.

Two images, side-by-side format

- Press "3D" button and switch to "SBS" for input signal is HDMI 1.3 2D 1080i side-by-side.

Image does not display in 3D

- Check if the battery of 3D glasses is drained.
- Check if the 3D glasses is turned on.
- When the input signal is HDMI 1.3 2D (1080i side-by-side half), press "3D" button and switch to "SBS".

Other problems

The projector stops responding to all controls

- If possible, turn off the projector, then unplug the power cord and wait at least 20 seconds before reconnecting power.

Lamp burns out or makes a popping sound

- When the lamp reaches its end of life, it will burn out and may make a loud popping sound. If this happens, the projector will not turn on until the lamp module has been replaced. To replace the lamp, follow the procedures in the "Replacing the Lamp" section on pages *62-63*.

Remote control problems

If the remote control does not work

- Check the operating angle of the remote control is pointed within ±15° to the IR receiver on the projector.
- Make sure there are not any obstructions between the remote control and the projector. Move to within 6 m (20 ft) of the projector.
- Make sure batteries are inserted correctly.
- Replace batteries if they are exhausted.

Warning indicators

When the warning indicators (see below) light up or flash, the projector will automatically shutdown:

- "LAMP" LED indicator is lit red and if "On/Standby" indicator flashes red.
- "TEMP" LED indicator is lit red and if "On/Standby" indicator flashes red. This indicates the projector has overheated. Under normal conditions, the project can be switched back on.
- "TEMP" LED indicator flashes red and if "On/Standby" indicator flashes red.

Unplug the power cord from the projector, wait for 30 seconds and try again. If the warning indicator light up or flash, please contact your nearest service center for assistance.

ADDITIONAL INFORMATION

LED lightning messages

Message	Power LED (Red)	Power LED (Green or Blue)	Temp-LED (Red)	Lamp-LED (Red)
Standby state (Input power cord)	Steady light			
Standby state (Burn in mode)	Flashing (0.5 sec off / 0.5 sec on)	Flashing (0.5 sec off / 0.5 sec on)	Flashing (0.5 sec off / 0.5 sec on)	Flashing (0.5 sec off / 0.5 sec on)
Power on (Warming)		Flashing (0.5 sec off / 0.5 sec on)		
Burn in (Warming)		Flashing		
Power on (Burn in mode)		Flashing (0.5 sec off / 0.5 sec on)		
Power on and Lamp lighting		Steady light		
Power off (Cooling)		Flashing (0.5 sec off / 0.5 sec light). Back to red steady light when cooling fan turns off.		
Burn in (Cooling)		Flashing		
Quick Resume (100 secs)		Flashing (0.25 sec off / 0.25 sec on)		
Error (Over temp.)	Flashing		Steady light	
Error (Fan failure)	Flashing		Flashing	
Error (Lamp failure)	Flashing			Steady light

- Power off:

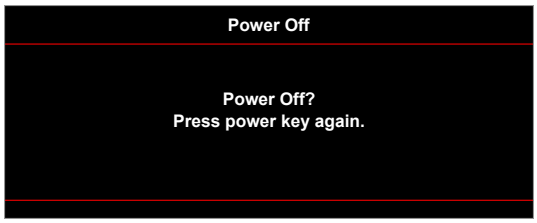

- Lamp warning:

ADDITIONAL INFORMATION

- Temperature warning:

- Fan failed:

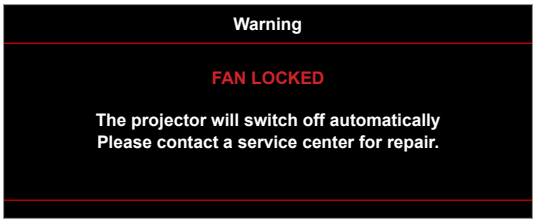

- Out of display range:

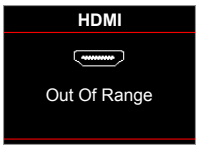

- Power down warning:

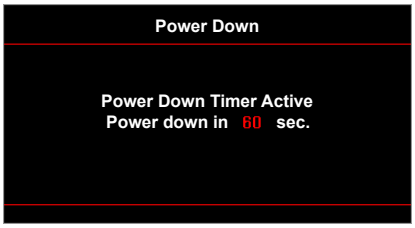

- Security timer alarm:

USING THE PROJECTOR

Specifications

Optical	Description
Native resolution	XGA/ WXGA/ 1080P
Lens	Manual zoom and manual focus
Image size (diagonal)	22.9”~252” (overdrive to 300”)
Projection distance	1m ~ 10m (focus range) (overdrive to 12m)

Electrical	Description
Color reproduction	1073.4 Million color
Scan rate	- Horizontal scan rate: 15.375~91.146 KHz - Vertical scan rate: 50~ 85 Hz (120Hz for 3D feature projector)
Built-in speaker	Yes, (9 IO-2W; 13 IO-10W)
Power requirement	100 - 240V AC 50/60Hz
Input current	2.9-1.0 A

Mechanical	Description
Installation orientation	Front, Rear, Ceiling - Front, Rear - top
Dimensions	- 298 mm (W) x 230 mm (D) x 83 mm (H) (without feet) - 298 mm (W) x 230 mm (D) x 96.5 mm (H) (with feet)
Weight	2.5 kg
Environmental conditions	Operating in 5 ~ 40°C , 10% to 85% humidity (non-condensing)

Note: *All specifications are subject to change without notice.*

USING THE PROJECTOR

Optoma global offices

For service or support, please contact your local office.

USA
3178 Laurelview Ct.
Fremont, CA 94538, USA
www.optomausa.com

888-289-6786
510-897-8601
services@optoma.com

Canada
3178 Laurelview Ct.
Fremont, CA 94538, USA
www.optomausa.com

888-289-6786
510-897-8601
services@optoma.com

Latin America
3178 Laurelview Ct.
Fremont, CA 94538, USA
www.optomausa.com

888-289-6786
510-897-8601
services@optoma.com

Europe
42 Caxton Way, The Watford Business Park
Watford, Hertfordshire,
WD18 8QZ, UK
www.optoma.eu
Service Tel : +44 (0)1923 691865

+44 (0) 1923 691 800
+44 (0) 1923 691 888
service@tsc-europe.com

Benelux BV
Randstad 22-123
1316 BW Almere
The Netherlands
www.optoma.nl

+31 (0) 36 820 0252
+31 (0) 36 548 9052

France
Bâtiment E
81-83 avenue Edouard Vaillant
92100 Boulogne Billancourt, France

+33 1 41 46 12 20
+33 1 41 46 94 35
savoptoma@optoma.fr

Spain
C/ José Hierro,36 Of. 1C
28522 Rivas VaciaMadrid,
Spain

+34 91 499 06 06
+34 91 670 08 32

Deutschland
Wiesenstrasse 21 W
D40549 Düsseldorf,
Germany

+49 (0) 211 506 6670
+49 (0) 211 506 66799
info@optoma.de

Scandinavia
Lerpeveien 25
3040 Drammen
Norway

+47 32 98 89 90
+47 32 98 89 99
info@optoma.no

PO.BOX 9515
3038 Drammen
Norway

Korea
WOOMI TECH.CO.,LTD.
4F, Minu Bldg.33-14, Kangnam-Ku,
Seoul,135-815, KOREA
korea.optoma.com

+82+2+34430004
+82+2+34430005

Japan
東京都足立区綾瀬3-25-18
株式会社オーエス
コンタクトセンター:0120-380-495

info@os-worldwide.com
www.os-worldwide.com

Taiwan
12F., No.213, Sec. 3, Beixin Rd.,
Xindian Dist., New Taipei City 231,
Taiwan, R.O.C.
www.optoma.com.tw

+886-2-8911-8600
+886-2-8911-6550
services@optoma.com.tw
asia.optoma.com

Hong Kong
Unit A, 27/F Dragon Centre,
79 Wing Hong Street,
Cheung Sha Wan,
Kowloon, Hong Kong

+852-2396-8968
+852-2370-1222
www.optoma.com.hk

China
5F, No. 1205, Kaixuan Rd.,
Changning District
Shanghai, 200052, China

+86-21-62947376
+86-21-62947375
www.optoma.com.cn