USA's primary source for projector lamps
myprojectorlamps

PROJECTOR OWNER'S MANUAL

Optoma

DS421 / DS431 / EH330 / EH331 / H114 / H183X ...

Need a replacement lamp for this projector?

www.myprojectorlamps.com

Original manufacturer manual, provided unmodified as a courtesy of MyProjectorLamps.com.
All trademarks belong to their respective owners.

Optoma

DLP® Projector

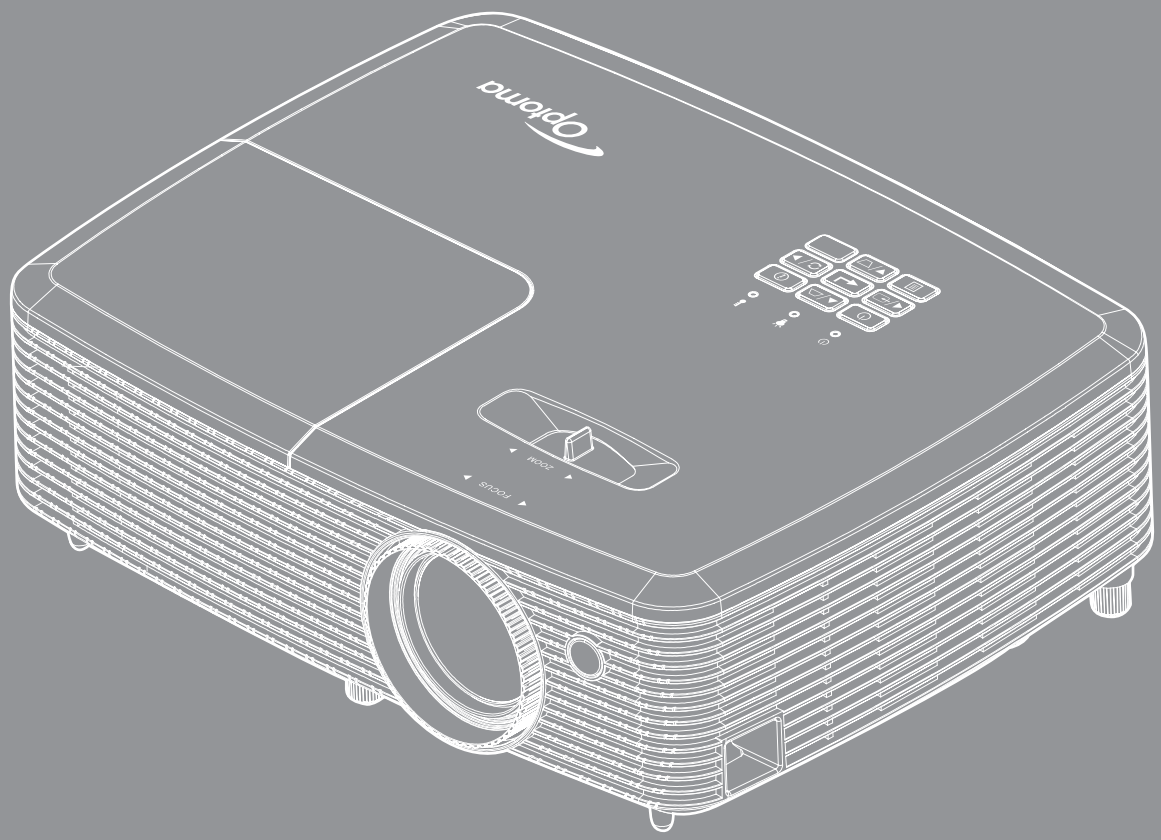

User manual

MHL™ HDMI™ HIGH DEFINITION MULTIMEDIA INTERFACE PICTURE BY DLP® TEXAS INSTRUMENTS

TABLE OF CONTENTS

SAFETY 4

Important Safety Instruction 4
3D Safety Information 5
Copyright 6
Disclaimer 6
Trademark Recognition 6
FCC 7
Declaration of Conformity for EU countries 7
WEEE 7

INTRODUCTION 8

Package Overview 8
Standard accessories 8
Optional accessories 8
Product Overview 9
Connections 10
Keypad 11
Remote control 12

SETUP AND INSTALLATION 13

Installing the projector 13
Connecting sources to the projector 14
Adjusting the projector image 16
Remote setup 17

USING THE PROJECTOR 19

Powering on / off the projector 19
Selecting an input source 20

USING THE PROJECTOR 21

Menu navigation and features 21
OSD Menu tree 22
Display image settings menu 31
Display 3D menu 33
Display aspect ratio menu 34
Display edge mask menu 37
Display zoom menu 37
Display image shift menu 37
Display keystone menu 37
Audio mute menu 38
Audio volume menu 38
Setup projection menu 38

Setup screen type menu 38
Setup lamp settings menu 38
Setup filter settings menu 38
Setup power settings menu 39
Setup security menu 40
Setup test pattern menu 41
Setup remote settings menu 41
Setup projector ID menu 41
Setup options menu 41
Setup reset all menu 42
Info menu 42

MAINTENANCE 43

Replacing the lamp 43
Installing and cleaning the dust filter 45

ADDITIONAL INFORMATION 46

Compatible resolutions 46
Image size and projection distance 49
Projector dimensions and ceiling mount installation 50
IR remote codes 51
Troubleshooting 53
Warning indicators 55
Specifications 57
Optoma global offices 58

SAFETY

	The lightning flash with arrow head within an equilateral triangle is intended to alert the user to the presence of uninsulated "dangerous voltage" within the product's enclosure that may be of sufficient magnitude to constitute a risk of electric shock to persons.
	The exclamation point within an equilateral triangle is intended to alert the user to the presence of important operating and maintenance (servicing) instructions in the literature accompanying the appliance.

Please follow all warnings, precautions and maintenance as recommended in this user's guide.

Important Safety Instruction

- Do not block any ventilation openings. To ensure reliable operation of the projector and to protect from over heating, it is recommended to install the projector in a location that does not block ventilation. As an example, do not place the projector on a crowded coffee table, sofa, bed, etc. Do not put the projector in an enclosure such as a book case or a cabinet that restricts air flow.
- To reduce the risk of fire and/or electric shock, do not expose the projector to rain or moisture. Do not install near heat sources such as radiators, heaters, stoves or any other apparatus such as amplifiers that emits heat.
- Do not let objects or liquids enter the projector. They may touch dangerous voltage points and short out parts that could result in fire or electric shock.
- Do not use under the following conditions:
  - In extremely hot, cold or humid environments.
    - (i) Ensure that the ambient room temperature is within 5°C ~ 40°C
    - (ii) Relative humidity is 10% ~ 85%
  - In areas susceptible to excessive dust and dirt.
  - Near any appliance generating a strong magnetic field.
  - In direct sunlight.
- Do not use the projector in places where flammable gases or explosives gases may be present in the atmosphere. The lamp inside the projector becomes very hot during operation and the gases may ignite and result in a fire.
- Do not use the unit if it has been physically damaged or abused. Physical damage/abuse would be (but not limited to):
  - Unit has been dropped.
  - Power supply cord or plug has been damaged.
  - Liquid has been spilled on to the projector.
  - Projector has been exposed to rain or moisture.
  - Something has fallen in the projector or something is loose inside.
- Do not place the projector on an unstable surface. The projector may fall over resulting in injury or the projector may become damaged.
- Do not block the light coming out of the projector lens when in operation. The light will heat the object and my melt, cause burns or start a fire.
- Please do not open or disassemble the projector as this may cause electric shock.
- Do not attempt to service the unit yourself. Opening or removing covers may expose you to dangerous voltages or other hazards. Please call Optoma before you send the unit for repair.
- See projector enclosure for safety related markings.
- The unit should only be repaired by appropriate service personnel.

- Only use attachments/accessories specified by the manufacturer.
- Do not look into straight into the projector lens during operation. The bright light may harm your eyes.
- When replacing the lamp, please allow the unit to cool down. Follow instructions as described on pages *43-44*.
- This projector will detect the life of the lamp itself. Please be sure to change the lamp when it shows warning messages.
- Reset the "Lamp Reset" function from the on-screen display "Lamp settings" menu after replacing the lamp module.
- When switching the projector off, please ensure the cooling cycle has been completed before disconnecting power. Allow 90 seconds for the projector to cool down.
- When the lamp is approaching to the end of its life time, the message "Lamp life exceeded." will show on the screen. Please contact your local reseller or service center to change the lamp as soon as possible.
- Turn off and unplug the power plug from the AC outlet before cleaning the product.
- Use a soft dry cloth with mild detergent to clean the display housing. Do not use abrasive cleaners, waxes or solvents to clean the unit.
- Disconnect the power plug from AC outlet if the product is not being used for a long period of time.

Note: *When the lamp reaches the end of its life, the projector will not turn back on until the lamp module has been replaced. To replace the lamp, follow the procedures listed under "Replacing the Lamp" section on pages 43-44.*

- *Do not setup the projector in places where it might be subjected to vibration or shock.*
- *Do not touch the lens with bare hands*
- *Remove battery/batteries from remote control before storage. If the battery/batteries are left in the remote for long periods, they may leak.*
- *Do not use or store the projector in places where smoke from oil or cigarettes may be present, as it can adversely affect the quality of the projector performance.*
- *Please follow the correct projector orientation installation as non standard installation may affect the projector performance.*
- *Use a power strip and or surge protector. As power outages and brown-outs can KILL devices*.

3D Safety Information

Please follow all warnings and precautions as recommended before you or your child use the 3D function.

Warning

Children and teenagers may be more susceptible to health issues associated with viewing in 3D and should be closely supervised when viewing these images.

Photosensitive Seizure Warning and Other Health Risks

- Some viewers may experience an epileptic seizure or stroke when exposed to certain flashing images or lights contained in certain Projector pictures or video games. If you suffer from, or have a family history of epilepsy or strokes, please consult with a medical specialist before using the 3D function.
- Even those without a personal or family history of epilepsy or stroke may have an undiagnosed condition that can cause photosensitive epileptic seizures.
- Pregnant women, the elderly, sufferers of serious medical conditions, those who are sleep deprived or under the influence of alcohol should avoid utilizing the unit's 3D functionality.
- If you experience any of the following symptoms, stop viewing 3D pictures immediately and consult a medical specialist: (1) altered vision; (2) light-headedness; (3) dizziness; (4) involuntary movements such as eye or muscle twitching; (5) confusion; (6) nausea; (7) loss of awareness; (8) convulsions; (9) cramps; and/ or (10) disorientation. Children and teenagers may be more likely than adults to experience these symptoms. Parents should monitor their children and ask whether they are experiencing these symptoms.

- Watching 3D projection may also cause motion sickness, perceptual after effects, disorientation, eye strain and decreased postural stability. It is recommended that users take frequent breaks to lessen the potential of these effects. If your eyes show signs of fatigue or dryness or if you have any of the above symptoms, immediately discontinue use of this device and do not resume using it for at least thirty minutes after the symptoms have subsided.
- Watching 3D projection while sitting too close to the screen for an extended period of time may damage your eyesight. The ideal viewing distance should be at least three times the screen height. It is recommended that the viewer's eyes are level with the screen.
- Watching 3D projection while wearing 3D glasses for an extended period of time may cause a headache or fatigue. If you experience a headache, fatigue or dizziness, stop viewing the 3D projection and rest.
- Do not use the 3D glasses for any other purpose than for watching 3D projection.
- Wearing the 3D glasses for any other purpose (as general spectacles, sunglasses, protective goggles, etc.) may be physically harmful to you and may weaken your eyesight.
- Viewing in 3D projection may cause disorientation for some viewers. Accordingly, DO NOT place your 3D PROJECTOR near open stairwells, cables, balconies, or other objects that can be tripped over, run into, knocked down, broken or fallen over.

Copyright

This publication, including all photographs, illustrations and software, is protected under international copyright laws, with all rights reserved. Neither this manual, nor any of the material contained herein, may be reproduced without written consent of the author.

© Copyright 2015

Disclaimer

The information in this document is subject to change without notice. The manufacturer makes no representations or warranties with respect to the contents hereof and specifically disclaims any implied warranties of merchantability or fitness for any particular purpose. The manufacturer reserves the right to revise this publication and to make changes from time to time in the content hereof without obligation of the manufacturer to notify any person of such revision or changes.

Trademark Recognition

Kensington is a U.S. registered trademark of ACCO Brand Corporation with issued registrations and pending applications in other countries throughout the world.

HDMI, the HDMI Logo, and High-Definition Multimedia Interface are trademarks or registered trademarks of HDMI Licensing LLC in the United States and other countries.

DLP®, DLP Link and the DLP logo are registered trademarks of Texas Instruments and BrilliantColor™ is a trademark of Texas Instruments.

All other product names used in this manual are the properties of their respective owners and are Acknowledged.

DARBEE is a trademark by Darbee Products, Inc.

MHL, Mobile High-Definition Link and the MHL Logo are trademarks or registered trademarks of MHL Licensing, LLC.

FCC

This device has been tested and found to comply with the limits for a Class B digital device pursuant to Part 15 of the FCC rules. These limits are designed to provide reasonable protection against harmful interference in a residential installation. This device generates, uses and can radiate radio frequency energy and, if not installed and used in accordance with the instructions, may cause harmful interference to radio communications.

However, there is no guarantee that interference will not occur in a particular installation. If this device does cause harmful interference to radio or television reception, which can be determined by turning the device off and on is encouraged to try to correct the interference by one or more of the following measures:

- Reorient or relocate the receiving antenna.
- Increase the separation between the device and receiver.
- Connect the device into an outlet on a circuit different from that to which the receiver is connected.
- Consult the dealer or an experienced radio/television technician for help.

Notice: Shielded cables

All connections to other computing devices must be made using shielded cables to maintain compliance with FCC regulations.

Caution

Changes or modifications not expressly approved by the manufacturer could void the user's authority, which is granted by the Federal Communications Commission, to operate this projector.

Operation Conditions

This device complies with Part 15 of the FCC Rules. Operation is subject to the following two conditions:

1. This device may not cause harmful interference and

2. This device must accept any interference received, including interference that may cause undesired operation.

Notice: Canadian users

This Class B digital apparatus complies with Canadian ICES-003.

Remarque à l'intention des utilisateurs canadiens

Cet appareil numerique de la classe B est conforme a la norme NMB-003 du Canada.

Declaration of Conformity for EU countries

- EMC Directive 2004/108/EC (including amendments)
- Low Voltage Directive 2006/95/EC
- R & TTE Directive 1999/5/EC (if product has RF function)

WEEE

Disposal instructions

Do not throw this electronic device into the trash when discarding. To minimize pollution and ensure utmost protection of the global environment, please recycle it.

INTRODUCTION

Package Overview

Carefully unpack and verify that you have the items listed below under standard accessories. Some of the items under optional accessories may not be available depending on the model, specification and your region of purchase. Please check with your place of purchase. Some accessories may vary from region to region.

The warranty card is only supplied in some specific regions. Please consult your dealer for detailed information.

Standard accessories

Projector

Remote control

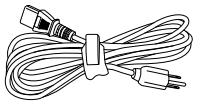

Power lead

- ☑ CD User Manual
- ☑ Warranty Card*
- ☑ Basic User Manual

Documentation

Note:

- *The remote control is shipped with the battery.*
- ** For European warranty information please visit www.optomaeurope.com.*

Optional accessories

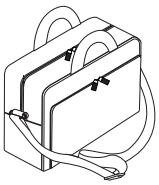

Carry bag

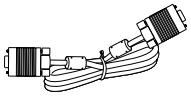

VGA cable

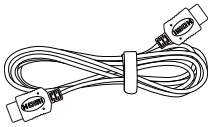

HDMI cable

Note: *Optional accessories vary depending on model, specification and region.*

INTRODUCTION

Product Overview

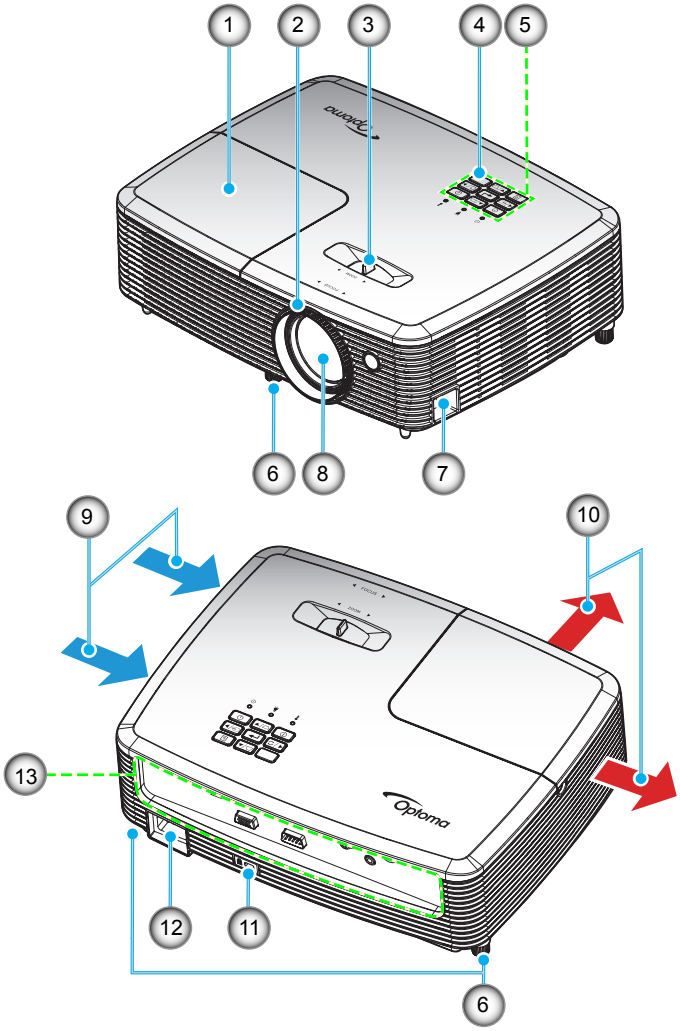

Note: *Do not block projector inlet or outlet air vents.*
(*) optional accessory varies depending on model, specification, and region.

No	Item	No	Item
1.	Lamp Cover	8.	Lens
2.	Focus Ring	9.	Ventilation (inlet)
3.	Zoom Lever	10.	Ventilation (outlet)
4.	IR Receiver	11.	Kensington™ Lock Port
5.	Keypad	12.	Power Socket
6.	Tilt-Adjustment Foot	13.	Input / Output
7.	Security Bar		

INTRODUCTION

Connections

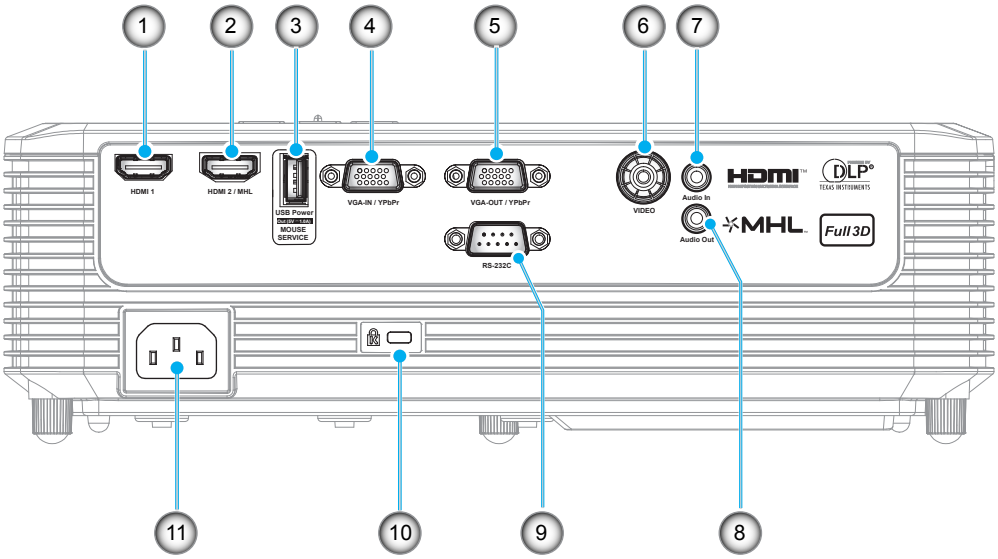

No	Item	Regulatory Name					
		Type 1 SVGA	Type 2 SVGA	Type 3 SVGA & Type 4 XGA	Type 5 WXGA	Type 6 WXGA	Type 7 1080p
1.	HDMI 1 Connector	N/A	✓	✓	✓	✓	✓
2.	HDMI 2 / MHL Connector	N/A	✓	N/A	N/A	✓	N/A
3.	USB Power Out (5V⎓1A) Connector / MOUSE / SERVICE Connector	✓*	✓	✓	✓*	✓	✓*
4.	VGA-IN / YPbPr Connector	✓	N/A	✓	✓	✓	✓
5.	VGA-OUT / YPbPr Connector	N/A	N/A	✓	N/A	✓	N/A
6.	VIDEO Connector	✓	N/A	✓	✓	✓	✓
7.	Audio In Connector	N/A	N/A	✓	✓	✓	✓
8.	Audio Out Connector	N/A	✓	✓	✓	✓	✓
9.	RS-232C Connector	N/A	N/A	✓	✓	✓	✓
10.	Kensington™ Lock Port	✓	✓	✓	✓	✓	✓
11.	Power Socket	✓	✓	✓	✓	✓	✓

Note: *"✓" means the item is supported, "N/A" means the item is not available.*

Note:

- *Remote mouse requires special remote control.*
- **This model supports mouse / service capability.*

INTRODUCTION

Keypad

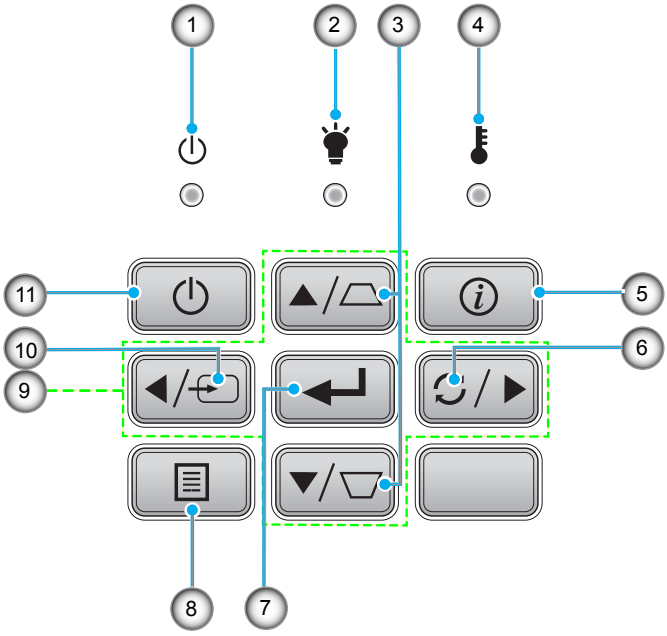

No	Item	No	Item
1.	On/Standby LED	7.	Enter
2.	Lamp LED	8.	Menu
3.	Keystone Correction	9.	Four Directional Select Keys
4.	Temp LED	10.	Source
5.	Information	11.	Power
6.	Re-Sync		

INTRODUCTION

Remote control

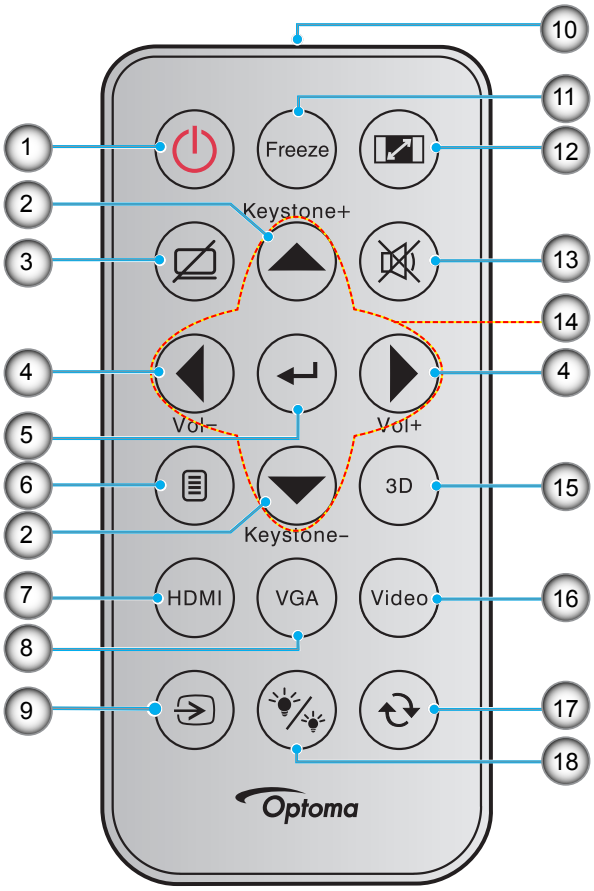

No	Item	No	Item
1.	Power On / Off	10.	IR LED Indicator
2.	Keystone + / -	11.	Freeze
3.	AV Mute	12.	Aspect Ratio
4.	Volume - / +	13.	Mute
5.	Enter	14.	Four Directional Select Keys
6.	Menu	15.	3D
7.	HDMI	16.	Video
8.	VGA	17.	Resync
9.	Source	18.	Lamp Mode

Note:

- *Some keys may have no function for models that do not support these features.*
- *Before using the remote control for the first time, remove the transparent insulation tape. See page 17 for battery installation.*

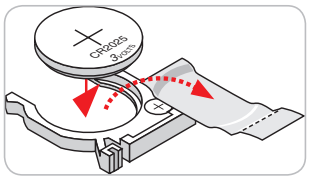

SETUP AND INSTALLATION

Installing the projector

Your projector is designed to be installed in one of four possible positions.

Your room layout or personal preference will dictate which installation location you select. Take into consideration the size and position of your screen, the location of a suitable power outlet, as well as the location and distance between the projector and the rest of your equipment.

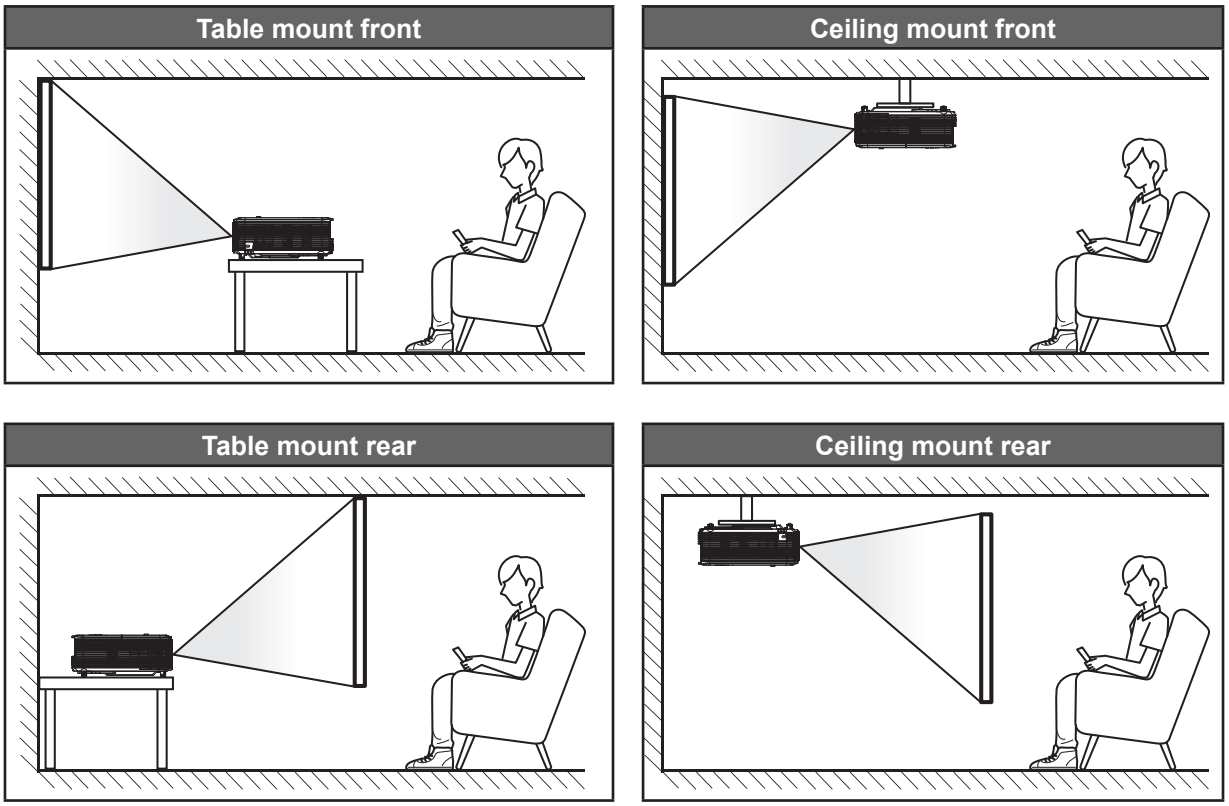

Projector should be placed flat on a surface and 90 degrees / perpendicular to the screen.

- How to determine projector location for a given screen size, please refer to distance table on page *48.*
- How to determine screen size for a given distance, please refer to distance table on page *48*.

Note: *The further away the projector is placed from the screen the projected image size increases and vertical offset also increases proportionally.*

IMPORTANT!

Do not operate the projector in any orientation other that table top or ceiling mount. The projector should be horizontal and not tilted either forwards/backwards or left/right. Any other orientation will invalidate the warranty and may shorten the lifetime of the projector lamp or the projector itself. For none standard installation advise please contact Optoma.

SETUP AND INSTALLATION

Connecting sources to the projector

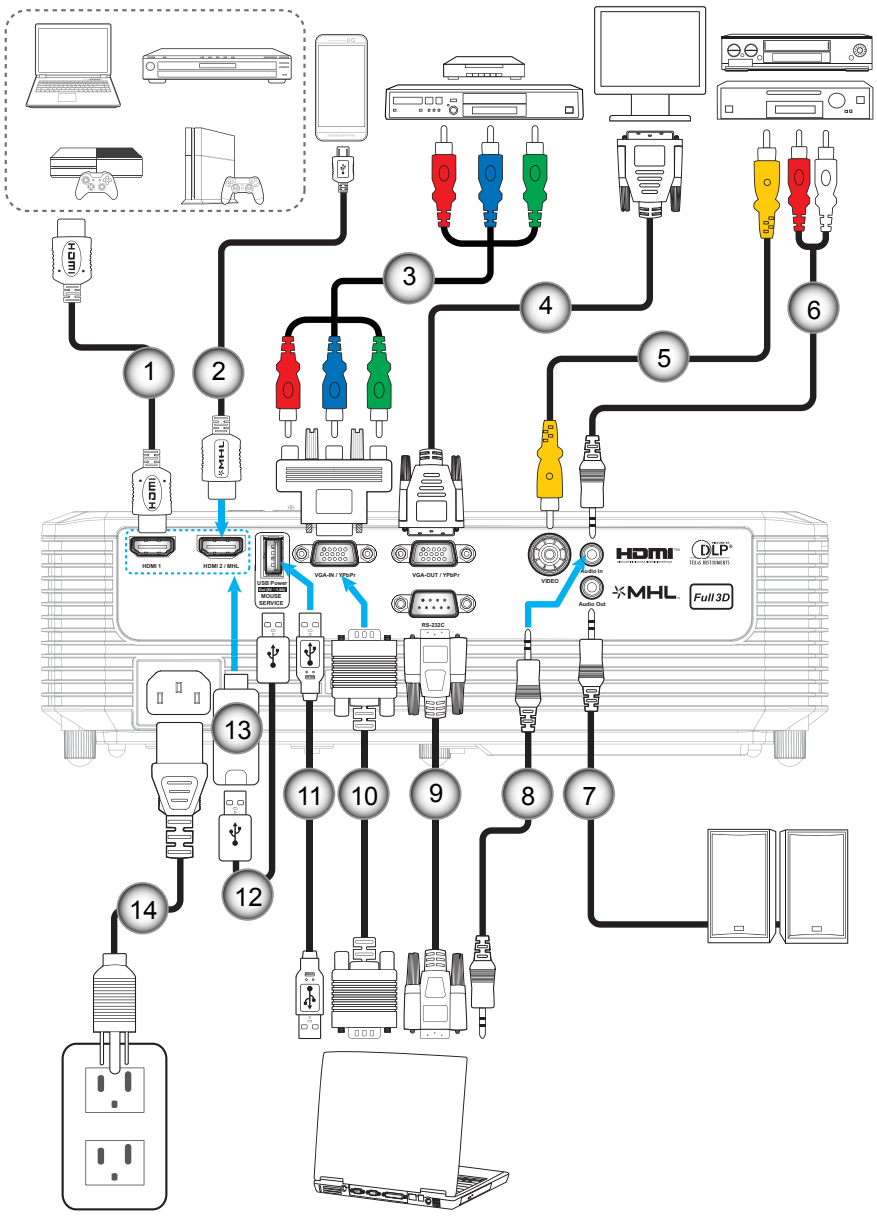

No	Item	Regulatory Name					
		Type 1 SVGA	Type 2 SVGA	Type 3 SVGA & Type 4 XGA	Type 5 WXGA	Type 6 WXGA	Type 7 1080p
1.	HDMI Cable	N/A	✓	✓	✓	✓	✓
2.	HDMI / MHL Cable	N/A	✓	N/A	N/A	✓	N/A
3.	RCA Component Cable	✓	N/A	✓	✓	✓	✓
4.	VGA Out Cable	N/A	N/A	✓	N/A	✓	N/A
5.	Video cable	✓	N/A	✓	✓	✓	✓
6.	Audio In Cable	N/A	N/A	✓	✓	✓	✓
7.	Audio Out Cable	N/A	✓	✓	✓	✓	✓

SETUP AND INSTALLATION

No	Item	Regulatory Name					
		Type 1 SVGA	Type 2 SVGA	Type 3 SVGA & Type 4 XGA	Type 5 WXGA	Type 6 WXGA	Type 7 1080p
8.	Audio In Cable	N/A	N/A	✓	✓	✓	✓
9.	RS232 Cable	N/A	N/A	✓	✓	✓	✓
10.	VGA In Cable	✓	N/A	✓	✓	✓	✓
11.	USB Cable (mouse control)	✓	✓	✓	✓	✓	✓
12.	USB Power Cable	N/A	✓	✓	N/A	✓	N/A
13.	HDMI Stick	N/A	✓	✓	N/A	✓	N/A
14.	Power Cord	✓	✓	✓	✓	✓	✓

Note: *"✓" means the item is supported, "N/A" means the item is not available.*

SETUP AND INSTALLATION

Adjusting the projector image

Image height

The projector is equipped with elevator feet for adjusting the image height.

1. Locate the adjustable foot you wish to adjust on the underside of the projector.
2. Rotate the adjustable foot clockwise or counterclockwise to raise or lower the projector.

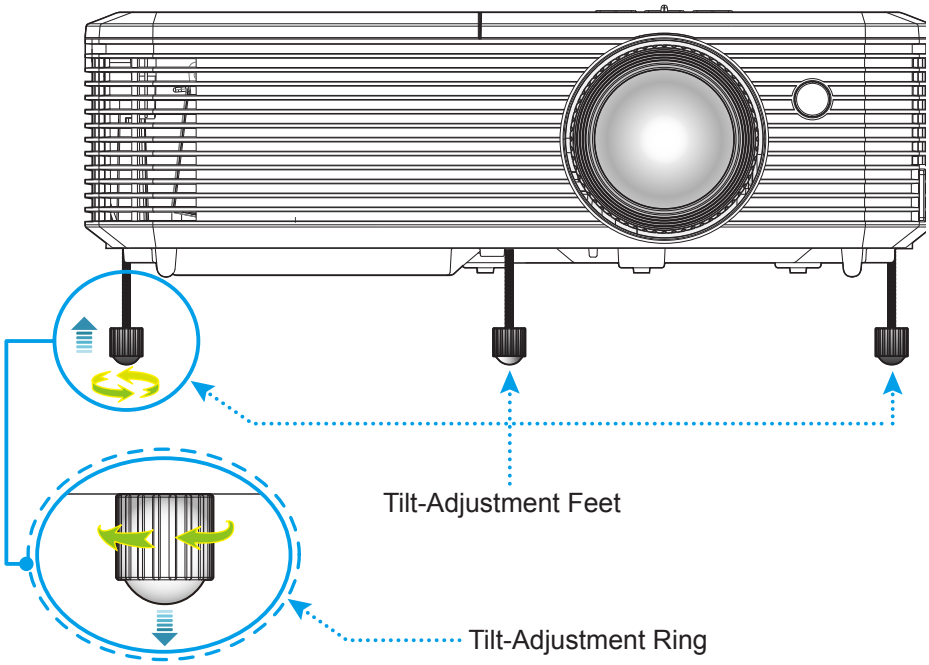

Zoom and focus

- To adjust the image size, turn the zoom lever clockwise or counterclockwise to increase or decrease the projected image size.
- To adjust the focus, turn the focus ring clockwise or counterclockwise until the image is sharp and legible.

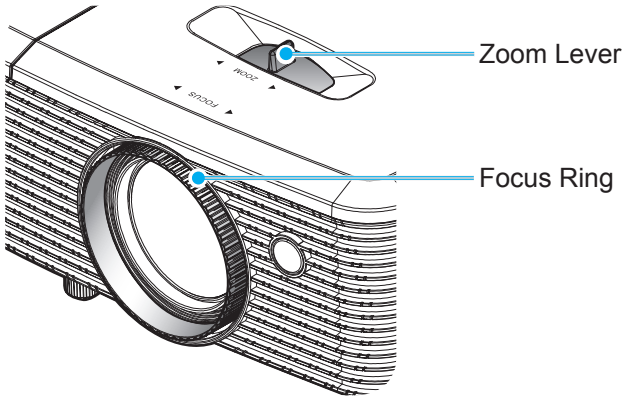

Note: *The projector will focus at a distance of 1m to 10.*

SETUP AND INSTALLATION

Remote setup

Installing / replacing the batteries

1. Press firmly and slide the battery cover off.

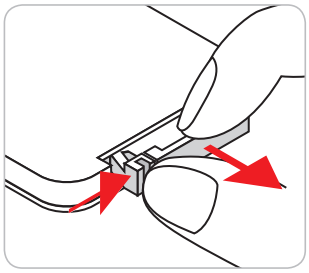

2. Install new battery into the compartment. Remove the old battery and install new one (CR2025). Ensure that the side with a “+” is facing up.

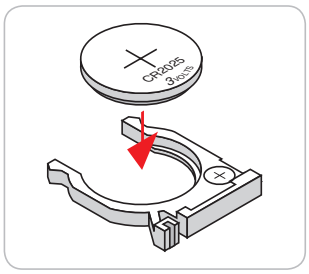

3. Put the cover back.

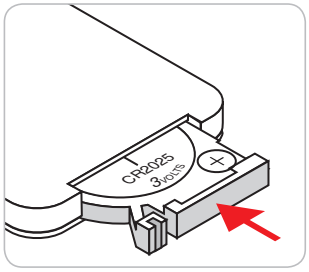

CAUTION: To ensure safe operation, please observe the following precautions:

- Use CR2025 type battery.
- Avoid contact with water or liquid.
- Do not expose the remote control to moisture or heat.
- Do not drop the remote control.
- If the battery has leaked in the remote control, carefully wipe the case clean and install new battery.
- Risk of an explosion if battery is replaced by an incorrect type.
- Dispose of used battery according to the instructions.

SETUP AND INSTALLATION

Effective range

Infra-Red (IR) remote control sensor is located on the top side of the projector. Ensure to hold the remote control at an angle within 20 degrees perpendicular to the projector's IR remote control sensor to function correctly. The distance between the remote control and the sensor should not be longer than 7 meters (~ 23 feet).

- Make sure that there are no obstacles between the remote control and the IR sensor on the projector that might obstruct the infra-red beam.
- Make sure the IR transmitter of the remote control is not being shined by sunlight or fluorescent lamps directly.
- Please keep the remote controller away from fluorescent lamps for over 2 meters or the remote controller might become malfunction.
- If the remote control is closed to Inverter-Type fluorescent lamps, it might become ineffective from time to time.
- If the remote control and the projector are within a very short distance, the remote control might become ineffective.

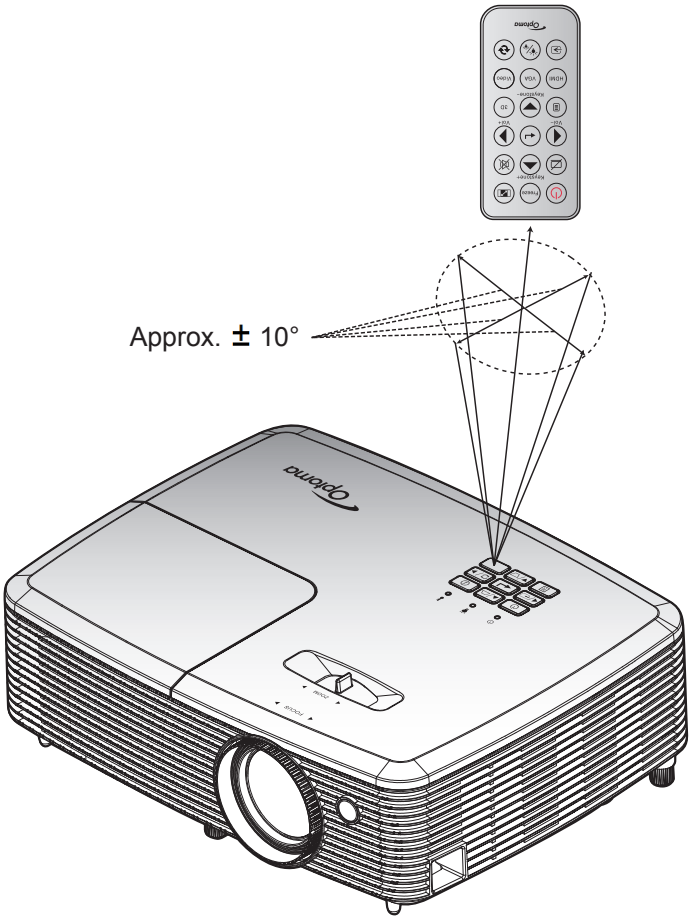

USING THE PROJECTOR

Powering on / off the projector

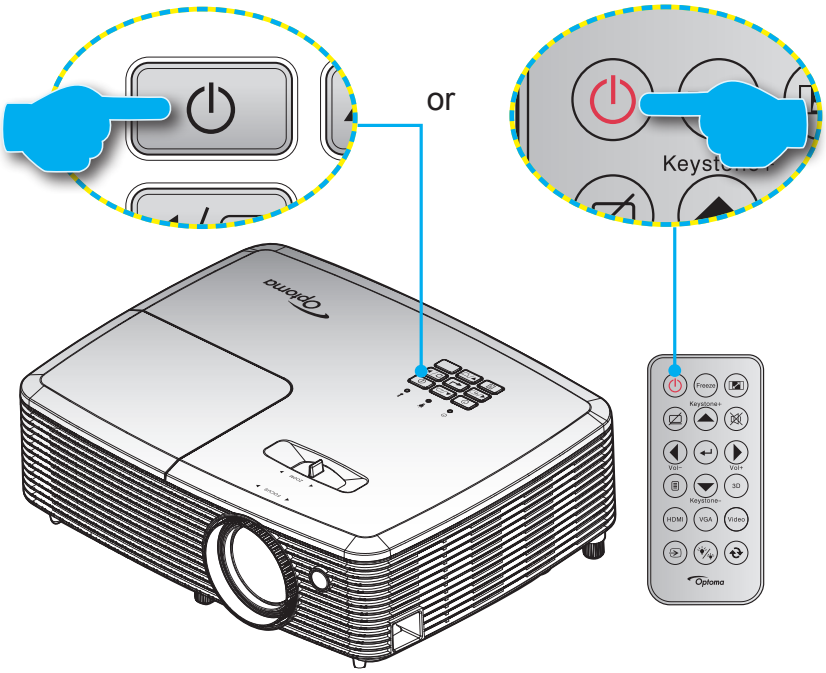

Powering on

1. Securely connect the power lead and signal/source cable. When connected, the On/Standby LED will turn red.
2. Turn on the projector by pressing the "⏻" either on the projector keypad or the remote control.
3. A start up screen will display in approximately 10 seconds and the On/Standby LED will be flashing green or flashing blue.

Note: *The first time the projector is turned on, you will be prompted to select the preferred language, projection orientation, and other settings.*

Powering off

1. Turn off the projector by pressing the "⏻" either on the projector keypad or the remote control.
2. The following message will be displayed:

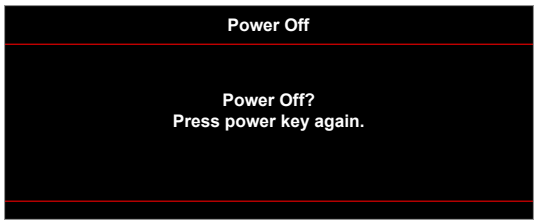

3. Press the "⏻" again to confirm, otherwise the message will disappear after 15 seconds. When you press the "⏻" button for the second time, the projector will shut down.
4. The cooling fans will continue to operate for about 10 seconds for the cooling cycle and the On/Standby LED will flash green or flash blue. When the On/Standby LED turns solid red, this indicates the projector has entered standby mode. If you wish to turn the projector back on, you must wait until the cooling cycle has finished and the projector has entered standby mode. When the projector is in standby mode, simply press the "⏻" button again to turn on the projector.
5. Disconnect the power lead from the electrical outlet and the projector.

Note: *It is not recommended that the projector is turned on immediately, right after a power off procedure.*

USING THE PROJECTOR

Selecting an input source

Turn on the connected source that you want to display on the screen, such as computer, notebook, video player, etc. The projector will automatically detect the source. If multiple sources are connected, push the source button on the projector keypad or the remote control to select the desired input.

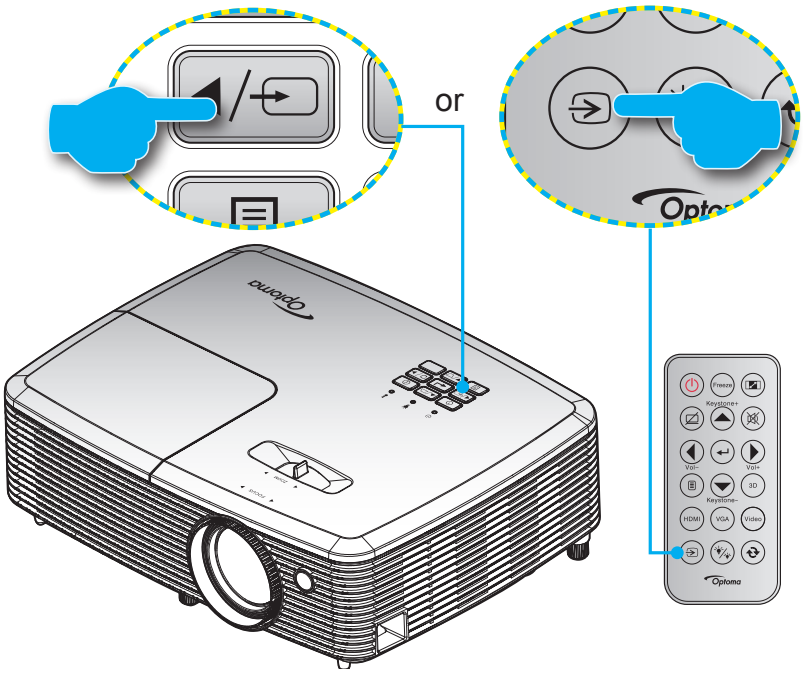

USING THE PROJECTOR

Menu navigation and features

The projector has multilingual on-screen display menus that allow you to make image adjustments and change a variety of settings. The projector will automatically detect the source.

1. To open the OSD menu, press ☰ on the remote control or the projector keyboard.
2. When OSD is displayed, use ▲▼ keys to select any item in the main menu. While making a selection on a particular page, press ↵ or ▶ key to enter sub menu.
3. Use ◀▶ keys to select the desired item in the sub menu and then press ↵ or ▶ key to view further settings. Adjust the settings by using ◀▶ keys.
4. Select the next item to be adjusted in the sub menu and adjust as described above.
5. Press the ↵ or ▶ to confirm, and the screen will return to the main menu.
6. To exit, press the ◀ or ☰ again. The OSD menu will close and the projector will automatically save the new settings.

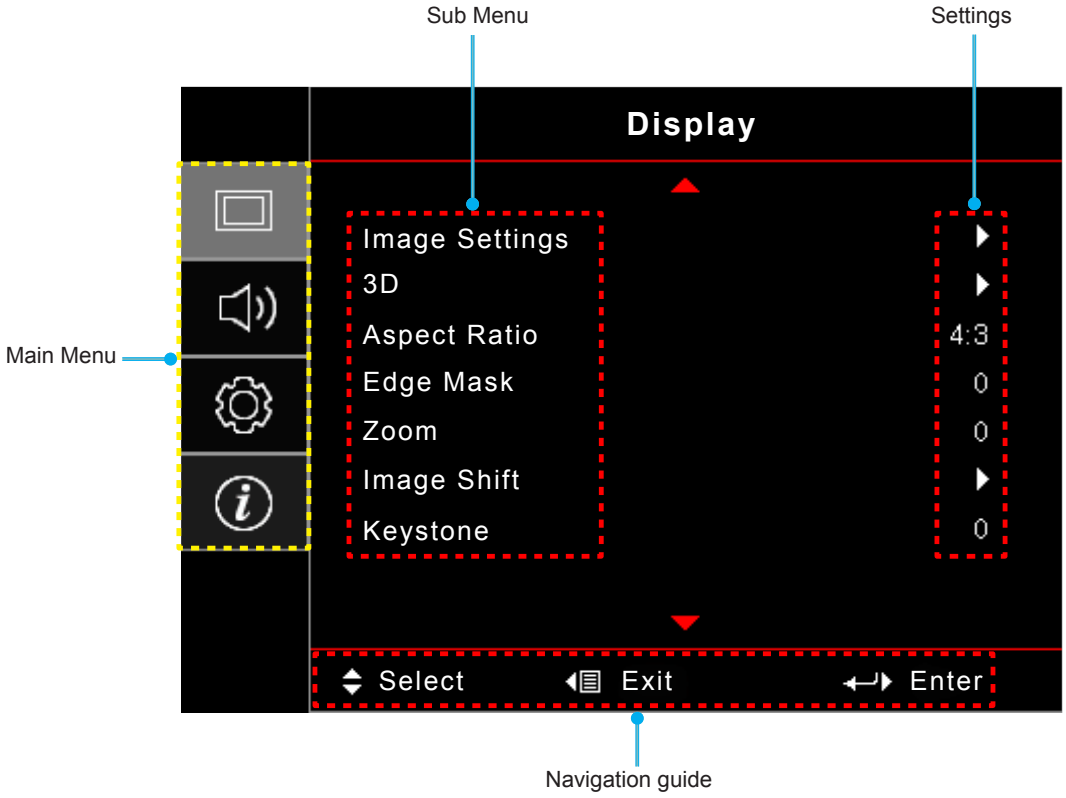

USING THE PROJECTOR

OSD Menu tree

Main Menu	Sub Menu	Sub Menu 2	Sub Menu 3	Sub Menu 4	Values
Display	Image Settings	Display Mode [Data]			Presentation
					Bright
					Cinema
					Game
					sRGB
					DICOM
					USER
					3D
		Wall Color [Data]			Off [Default]
					BlackBoard
					Light Yellow
					Light Green
					Light Blue
					Pink
					Gray
		Brightness			-50~50
		Contrast			-50~50
		Sharpness			1~15
		Color			-50~50
		Tint			-50~50
		Gamma	Film		
			Video		
			Graphics		
			Standard(2.2)		
			1.8		
			2.0		
			2.4		
		Color Settings	BrilliantColor™		1~10
			Color Temperature [Data model]		Warm
					medium
					Cool

Main Menu	Sub Menu	Sub Menu 2	Sub Menu 3	Sub Menu 4	Values
Display	Image Settings	Color Settings	Color Matching	Color	R [Default]
					G
					B
					C
					Y
					M
					W
				Saturation	-50~50 [Default:0]
				Hue	-50~50 [Default:0]
				Gain	-50~50 [Default:0]
				Reset	Cancel [Default]
					Yes
				Exit	
			RGB Gain/Bias	Red Gain	-50~50
				Green Gain	-50~50
				Blue Gain	-50~50
				Red Bias	-50~50
				Green Bias	-50~50
				Blue Bias	-50~50
				Reset	Cancel [Default]
					Yes
				Exit	
			Color Space [Not HDMI Input]		Auto [Default]
					RGB
					YUV
			Color Space [HDMI Input]		Auto [Default]
					RGB(0~255)
					RGB(16~235)
					YUV
			RGB Channel		Normal [Default]
					Red
					Green
					Blue
			White Level		-50~50
			Black Level		-50~50
			Saturation		-50~50
			Hue		-50~50
			IRE		0
					7.5
			Exit		

Main Menu	Sub Menu	Sub Menu 2	Sub Menu 3	Sub Menu 4	Values
Display	Image Settings	Signal	Automatic		Off
					On [Default]
			Frequency		0~100 [Default: 0]
			Phase		-50~50 [Default: 0]
			H. Position		-50~50 [Default: 0]
			V. Position		-50~50 [Default: 0]
			Exit		
		Brightness Mode [Lamp Base - Data]			Bright [Default]
					Eco
					Dynamic
					Eco+
		Reset			
	3D	3D Mode			Off
					DLP-Link [Default]
					IR
		3D->2D			3D [Default]
					L
					R
		3D Format			Auto [Default]
					SBS
					Top and Bottom
					Frame Sequential
		3D sync invert			On
					Off [Default]
	Aspect Ratio				4:3
					16:9
					16:10 [WXGA WUXGA models]
					LBX [except SVGA XGA models]
					Native
					Auto
	Edge Mask				0~10 [Default: 0]
	Zoom				-5~25 [Default: 0]
	Image shift	H: 0; V: -100			[Default:0]
		H: -100; V: 0			
		H: 100; V: 0			
		H: 0; V: 100			
		H: -100; V: 0			
		H: 0; V: -100			
		H: 100; V: 0			
		H: 0; V: 100			
	Keystone				-40~40 [Default:0]

USING THE PROJECTOR

Main Menu	Sub Menu	Sub Menu 2	Sub Menu 3	Sub Menu 4	Values
Audio	Mute				Off [Default]
					On
	Volume				0-10 [Default: 5]
Setup	Projection				Front [Default]
					Rear
					Ceiling-top
					Rear-top
	Screen Type	[WXGA WUXGA models]			16:9
					16:10 [Default]
	Lamp Settings	Lamp Reminder			Off
					On [Default]
		Lamp Reset			Cancel [Default]
					Yes
	Filter Settings	Optional Filter Installed			Yes
					No
		Filter Usage Hours			(Read only)
		Filter Reminder			Off
					300hr
					500hr [Default]
					800hr
					1000hr
		Filter Reset			Cancel [Default]
					Yes
	Power Settings	Direct Power On			Off [Default]
					On
		Auto Power Off (min)			0~180 (5 min increments) [Default: 0]
		Sleep Timer	Sleep Timer (min)		0~990 (30 min increments) [Default: 0]
			Always On		Yes
					No [Default]
		Quick Resume			Off
					On [Default]
		Power Mode (Standby)			Active
					Eco [Default]
	Security	Security			
		Security Timer	Month		
			Day		
			Hour		
		Change Password			

Main Menu	Sub Menu	Sub Menu 2	Sub Menu 3	Sub Menu 4	Values
Setup	Test Pattern				Off
					Grid
					White
	Remote Settings [depends on remote]	IR Function			On
					Off
		User1			HDMI 2
					Test Pattern
					Brightness
					Contrast
					Sleep Timer
					Color Matching
					Color Temp
					Gamma
					Projection
					Lamp Settings
					Zoom
					Freeze
					MHL
		User2			HDMI 2
					Test Pattern
					Brightness
					Contrast
					Sleep Timer
					Color Matching
					Color Temp
					Gamma
					Projection
					Lamp Settings
					Zoom
					Freeze
					MHL

Main Menu	Sub Menu	Sub Menu 2	Sub Menu 3	Sub Menu 4	Values
Setup	Remote Settings [depends on remote]	User3			HDMI 2
					Test Pattern
					Brightness
					Contrast
					Sleep Timer
					Color Matching
					Color Temp
					Gamma
					Projection
					Lamp Settings
					Zoom
					Freeze
					MHL
	Projector ID				00~99
	Options	Language			English [Default]
					Deutsch
					Français
					Italiano
					Español
					Português
					Polski
					Nederlands
					Svenska
					Norsk
					Dansk
					Suomi
					ελληνικά
					繁體中文
					简体中文
					日本語
					한국어
					Русский
					Magyar
					Čeština
					عـربي
					ไทย
					Türkçe
					فارسـی
					Tiếng Việt
					Bahasa Indonesia
					Română
					Slovenčina
		Closed Captioning			CC1
					CC2
					Off [Default]

Main Menu	Sub Menu	Sub Menu 2	Sub Menu 3	Sub Menu 4	Values
Setup	Options	Menu Settings	Menu Location		Top left
					Top right
					Center [Default]
					Bottom left
					Bottom right
			Menu Timer		Off
					5sec
					10sec [Default]
		Input Source			HDMI (Type 3 SVGA/ Type 4 XGA/ Type 5 WXGA/ Type 7 1080p)
					HDMI1 (Type 2 SVGA/ Type 6 WXGA)
					HDMI2/MHL (Type 2 SVGA/ Type 6 WXGA)
					VGA (Type 1 SVGA/ Type 3 SVGA/ Type 4 XGA/ Type 5 WXGA/ Type 6 WXGA/ Type 7 1080p)
					Video (Type 1 SVGA/ Type 3 SVGA/ Type 4 XGA/ Type 5 WXGA/ Type 6 WXGA/ Type 7 1080p)
		Input Name	HDMI		Default (Type 3 SVGA/ Type 4 XGA/ Type 5 WXGA/ Type 7 1080p) [Default]
					Custom (Type 3 SVGA/ Type 4 XGA/ Type 5 WXGA/ Type 7 1080p)
			HDMI1		Default (Type 2 SVGA/ Type 6 WXGA) [Default]
					Custom (Type 2 SVGA/ Type 6 WXGA)
			HDMI2/MHL		Default (Type 2 SVGA/ Type 6 WXGA) [Default]
					Custom (Type 2 SVGA/ Type 6 WXGA)
			VGA		Default (Type 1 SVGA/ Type 3 SVGA/ Type 4 XGA/ Type 5 WXGA/ Type 6 WXGA/ Type 7 1080p) [Default]
					Custom (Type 1 SVGA/ Type 3 SVGA/ Type 4 XGA/ Type 5 WXGA/ Type 6 WXGA/ Type 7 1080p)
			Video		Default (Type 1 SVGA/ Type 3 SVGA/ Type 4 XGA/ Type 5 WXGA/ Type 7 1080p) [Default]
					Custom (Type 1 SVGA/ Type 3 SVGA/ Type 4 XGA/ Type 5 WXGA/ Type 6 WXGA/ Type 7 1080p)

USING THE PROJECTOR

Main Menu	Sub Menu	Sub Menu 2	Sub Menu 3	Sub Menu 4	Values
Setup	Options	High Altitude			Off [Default]
					On
		Display Mode Lock			Off [Default]
					On
		Keypad Lock			Off [Default]
					On
		Information Hide			Off [Default]
					On
		Logo			Default [Default]
					Neutral
		Background Color			None [Default]
					Blue
					Red
					Green
					Grey
					Logo
	Reset	Reset OSD			Cancel [Default]
					Yes
		Reset to Default			Cancel [Default]
					Yes
Information	Regulatory				
	Serial Number				
	Current Input Source				
	Resolution				00x00
	Refresh Rate				0.00Hz
	Projector ID				00~99
	Display Mode				
	Power mode(standby)				
	Brightness Mode				
	Filter Hours				
	Lamp Hours	Bright mode			0H
		Eco mode			0H
		Dynamic mode			0H
		Eco+ mode			0H
		Total hours			
	FW Version	System			
		MCU			

Note:

- *If the Signal setting is set to Automatic, the Phase, frequency items are grayed out. If the "Signal" setting is set to a specific input source, the phase, frequency items will appear for user to manually tune and saved in settings.*
- *The "LAMP RESET" in OSD will only reset both Lamp Hours in OSD and Lamp Hours in service*

mode. The Projection Hours in service mode will not be reset.

- *When you made the changes on the “IR Function”, “Projection”, or “Keypad Lock” function, a confirmation message will appear on the screen. Select “Yes” to save the settings.*
- *Each display mode can be adjusted and saved the value.*
- *In 3D timing mode, the zoom/edge mask will be disabled to prevent from image break.*

Display menu

USING THE PROJECTOR

Display image settings menu

Display Mode

There are many factory presets optimized for various types of images.

- **Presentation**: This mode is suitable for showing PowerPoint presentations when the projector is connected to the PC.
- **Bright**: Maximum brightness from PC input.
- **Cinema**: Select this mode for home theater.
- **Game**: Select this mode to increase the brightness and response time level for enjoying video games.
- **sRGB**: Standardized accurate color.
- **DICOM**: This mode can project a monochrome medical image such as an X ray radiography, MRI, etc.
- **USER**: Memorize user's settings.
- **3D**: To experience the 3D effect, you need to have 3D glasses. Make sure your PC/portable device has a 120 Hz signal output quad buffered graphics card and a 3D Player installed.

Wall Color (Data mode)

Use this function to obtain an optimized screen image according to the wall color. Select between off, blackboard, light yellow, light green, light blue, pink, and gray.

Brightness

Adjust the brightness of the image.

Contrast

The contrast controls the degree of difference between the lightest and darkest parts of the picture.

Sharpness

Adjust the sharpness of the image.

Color

Adjust a video image from black and white to fully saturated color.

Tint

Adjust the color balance of red and green.

Gamma

Set up gamma curve type. After the initial setup and fine tuning is completed, utilize the Gamma Adjustment steps to optimize your image output.

- **Film**: For home theater.
- **Video**: For video or TV source.
- **Graphics**: For PC / Photo source.
- **Standard(2.2)**: For standardized setting.
- **1.8/ 2.0/ 2.4**: For specific PC / Photo source.

Color Settings

Configure the color settings.

- **BrillianColor™**: This adjustable item utilizes a new color-processing algorithm and enhancements to enable higher brightness while providing true, more vibrant colors in picture.
- **Color Temperature (data-mode only)**: Select a color temperature from Warm, Medium, or Cool.
- **Color Temperature**: Select a color temperature from D50, D65, D75, D83, D93, and Native.
- **Color Matching**: Select the following options:
  - Color: Adjust the red (R), green (G), black (B), cyan (C), yellow (Y), magenta (M), and white (W) level of the image.
  - Saturation: Adjust a video image from black and white to fully saturated color.
  - Hue: Adjust the color balance of red and green.
  - Gain: Adjust the image brightness.
  - Reset: Return the factory default settings for color matching.
  - Exit: Exit the “Color Matching” menu.
- **RGB Gain/Bias:** This settings allows to configure the brightness (gain) and contrast (bias) of an image.
  - Reset: Return the factory default settings for RGB gain/bias.
  - Exit: Exit the “RGB Gain/Bias” menu.
- **Color Space (non-HDMI input only)**: Select an appropriate color matrix type from the following: AUTO, RGB, or YUV.
- **Color Space (HDMI input only)**: select an appropriate color matrix type from the following: Auto, RGB(0-255), RGB(16-235), and YUV.
- **RGB Channel:** Select from normal, red, green, or blue channels.
- **White Level:** Allow user to adjust White Level when inputting Video signals.
- **Black Level:** Allow user to adjust Black Level when inputting Video signals.
- **Saturation:** Adjust a video image from black and white to fully saturated color.
- **Hue:** Adjust the color balance of red and green.
- **IRE:** Allow user to adjust IRE value when inputting Video signals.

  Note: *IRE is only available with NTSC video format.*
- **Exit**: Exit the “Color Settings” menu.

Signal

Adjust the signal options.

- **Automatic**: Configure automatically the signal (the frequency and phase items are grayed out). If automatic is disabled, the frequency and phase items will appear for tuning and saving the settings.
- **Frequency**: Change the display data frequency to match the frequency of your computer’s graphic card. Use this function only if the image appears to flicker vertically.
- **Phase**: Synchronize the signal timing of the display with the graphic card. If the image appears to be unstable or flickers, use this function to correct it.
- **H. Position**: Adjust the horizontal positioning of the image.
- **V. Position**: Adjust the vertical positioning of the image.
- **Exit**: Exit the “Signal” menu.

Brightness Mode (Lamp base data)

Adjust the brightness mode settings for lamp-based projectors.

- **Bright**: Choose “Bright” to increase the brightness.
- **Eco**: Choose “Eco” to dim the projector lamp which will lower power consumption and extend the lamp life.
- **Dynamic**: Choose “Dynamic” to dim the lamp power which will be based on brightness level of the content and adjust lamp power consumption between 100% and 30% dynamically. The lamp life will be extended.
- **Eco+**: When Eco+ mode is activated, the brightness level of the content is automatically detected to significantly reduced lamp power consumption (up to 70%) during periods of inactivity.

Reset

Return the factory default settings for color settings.

Display 3D menu

3D Mode

Use this option to disable the 3D function or select the appropriate the 3D function.

- **Off**: Select “Off” to turn off 3D mode.
- **DLP-Link**: Select to use optimized settings for DLP 3D Glasses.
- **IR**: Select “IR” to use optimized setting for IR 3D Glasses.

3D → 2D

Use this option to specify how the 3D content should appear on the screen.

- **3D:** Display 3D signal.
- **L (Left):** Display the left frame of 3D content.
- **R (Right):** Display the right frame of 3D content.

3D Format

Use this option to select the appropriate 3D format content.

- **Auto**: When a 3D identification signal is detected, the 3D format is selected automatically.
- **SBS**: Display 3D signal in “Side-by-Side” format.
- **Top and Bottom**: Display 3D signal in “Top and Bottom” format.
- **Frame Sequential**: Display 3D signal in “Frame Sequential” format.

3D Sync Invert

Use this option to enable/disable the 3D sync invert function.

Display aspect ratio menu

Aspect Ratio

Select the aspect ratio of the displayed image between the following options:

- **4:3**: This format is for 4:3 input sources.
- **16:9**: This format is for 16:9 input sources, like HDTV and DVD enhanced for Wide screen TV.
- **16:10 (for WXGA and WUXGA models only)**: This format is for 16:10 input sources, like widescreen laptops.
- **LBX (except SVGA and XGA models)**: This format is for non-16x9, letterbox source and if you use external 16x9 lens to display 2.35:1 aspect ratio in full resolution.
- **Native**: This format displays the original image without any scaling.
- **Auto**: Automatically selects the appropriate display format.

Note:

- *Detailed informations about LBX mode:*
  - *Some Letter-Box Format DVDs are not enhanced for 16x9 TVs. In this situation, the image will not look right when displaying image in 16:9 mode. In this situation, please try to use the 4:3 mode to view the DVD. If the content is not 4:3, there will be black bars around the image in 16:9 display. For this type of content, you can use LBX mode to fill the image on the 16:9 display.*
  - *If you use an external anamorphic lens, this LBX mode also allows you to watch a 2.35:1 content (include Anamorphic DVD and HDTV film source) that supports anamorphic wide is enhanced for 16x9 Display in a wide 2.35:1 image. In this case, there are no black bars. Lamp power and vertical resolution are fully utilized.*
- *To use the superwide format, do the following:*
  - *a) Set the screen aspect ratio to 2.0:1.*
  - *b) Select "Superwide" format.*
  - *c) Align the projector image correctly on the screen.*

SVGA/XGA scaling table:

Source	480i/p	576i/p	1080i/p	720p
4x3	Scale to 1024x768.			
16x9	Scale to 1024x576.			
Native	No scaling will be made; the image is displayed with the resolution based on input source.			
Auto	-If source is 4:3, the screen type will be scaled to 1024x768. -If source is 16:9, the screen type will be scaled to 1024x576. -If source is 15:9, the screen type will be scaled to 1024x614. -If source is 16:10, the screen type will be scaled to 1024x640.			

USING THE PROJECTOR

SVGA/XGA auto mapping rule:

Auto	Input resolution		Auto/Scale	
	H-resolution	V-resolution	1024	768
4:3	640	480	1024	768
	800	600	1024	768
	1024	768	1024	768
	1600	1200	1024	768
Wide Laptop	1280	720	1024	576
	1280	768	1024	614
	1280	800	1024	640
SDTV	720	576	1024	576
	720	480	1024	576
HDTV	1280	720	1024	576
	1920	1080	1024	576

WXGA scaling table (screen type 16x10):

Note:

- *Supported screen type 16:9 (1280x720), 16:10 (1280x800).*
- *When screen type is 16:9, the16x10 format becomes unavailable.*
- *When screen type is 16:10, the 16x9 format becomes unavailable.*
- *If you select auto option then the display mode will be also automatically changed.*

16 : 10 screen	480i/p	576i/p	1080i/p	720p	PC
4x3	Scale to 1066x800.				
16x10	Scale to 1280x800.				
LBX	Scale to 1280x960, then get the central 1280x800 image to display.				
Native mode	1:1 mapping centered.		1:1 mapping display 1280x800.	1280x720 centered.	1:1 mapping centered.
Auto	-Input source will be fit into 1280x800 display area and be kept its original aspect ratio. -If source is 4:3, the screen type will be scaled to 1066x800. -If source is 16:9, the screen type will be scaled to 1280x720. -If source is 15:9, the screen type will be scaled to 1280x768. -If source is 16:10, the screen type will be scaled to 1280x800.				

WXGA auto mapping rule (screen type 16x10):

Auto	Input resolution		Auto/Scale	
	H-resolution	V-resolution	1280	800
4:3	640	480	1066	800
	800	600	1066	800
	1024	768	1066	800
	1280	1024	1066	800
	1400	1050	1066	800
	1600	1200	1066	800
Wide Laptop	1280	720	1280	720
	1280	768	1280	768
	1280	800	1280	800
SDTV	720	576	1280	720
	720	480	1280	720
HDTV	1280	720	1280	720
	1920	1080	1280	720

WXGA scaling table (screen type 16x9):

16 : 9 screen	480i/p	576i/p	1080i/p	720p	PC
4x3	Scale to 960x720.				
16x9	Scale to 1280x720.				
LBX	Scale to 1280x960, then get the central 1280x720 image to display.				
Native mode	1:1 mapping centered.		1:1 mapping display 1280x720.	1280x720 centered.	1:1 mapping centred.
Auto	-If this format is select, screen type will automatically become 16:9 (1280x720). -If source is 4:3, the screen type will be scaled to 960x720. -If source is 16:9, the screen type will be scaled to 1280x720. -If source is 15:9, the screen type will be scaled to 1200x720. -If source is 16:10, the screen type will be scaled to 1152x720.				

WXGA auto mapping rule (screen type 16x9):

Auto	Input resolution		Auto/Scale	
	H-resolution	V-resolution	1280	720
4:3	640	480	960	720
	800	600	960	720
	1024	768	960	720
	1280	1024	960	720
	1400	1050	960	720
	1600	1200	960	720
Wide Laptop	1280	720	1280	720
	1280	768	1200	720
	1280	800	1152	720
SDTV	720	576	1280	720
	720	480	1280	720
HDTV	1280	720	1280	720
	1920	1080	1280	720

Display edge mask menu

Edge Mask

Use this function to remove the video encoding noise on the edge of video source.

Display zoom menu

Zoom

Use to reduce or magnify an image on the projection screen.

Display image shift menu

Image Shift

Adjust the projected image position horizontally (H) or vertically (V).

Display keystone menu

Keystone

Adjust the image distortion caused by tilting the projector.

Audio menu

Audio mute menu

Mute

Use this option to temporarily turn off the sound.

- **On:** Choose the “On” to turn mute on.
- **Off:** Choose the “Off” to turn mute off.

Note: *“Mute” function affects both internal and external speaker volume.*

Audio volume menu

Volume

Adjust the volume level.

Setup menu

Setup projection menu

Projection

Select the preferred projection between front, rear, ceiling-top, and rear-top.

Setup screen type menu

Screen Type (for WXGA and WUXGA models only)

Choose the screen type from 16:9 and 16:10.

Setup lamp settings menu

Lamp Reminder

Choose this function to show or to hide the warning message when the changing lamp message is displayed. The message will appear 30 hours before suggested replacement of lamp.

Lamp Reset

Resets the lamp hour counter after replacing the lamp.

Setup filter settings menu

Optional Filter Installed

Set the warning message setting.

- **Yes:** Display warning message after 500 hours of use.

Note: *“Filter Usage Hours / Filter Reminder / Filter Reset” will only appear when “Optional Filter Installed” is “Yes”.*

- **No:** Turn off warning message.

Filter Usage Hours

Display the filter time.

Filter Reminder

Choose this function to show or hide the warning message when the changing filter message is displayed. The available options include 300hr, 500hr, 800hr, and 1000hr.

Filter Reset

Reset the dust filter counter after replacing or cleaning the dust filter.

Setup power settings menu

Direct Power On

Choose “On” to activate Direct Power mode. The projector will automatically power on when AC power is supplied, without pressing the “Power” key on the projector keypad or on the remote control.

Auto Power Off (min)

Sets the countdown timer interval. The countdown timer will start, when there is no signal being sent to the projector. The projector will automatically power off when the countdown has finished (in minutes).

Sleep Timer

Configure the sleep timer.

- **Sleep Timer (min):** Sets the countdown timer interval. The countdown timer will start, with or without a signal being sent to the projector. The projector will automatically power off when the countdown has finished (in minutes).

  Note: *The Sleep Timer is reset every time when the projector is powered off.*

- **Always On:** Check to set the sleep timer always on.

Quick Resume

Set the quick resume setting.

- **On:** If the projector is accidentally turned off, this feature allows the projector to be instantly powered on again, if selected within a period of 100 seconds.
- **Off:** The fan will start cooling the system after 10 seconds when user turns off the projector.

Power Mode (Standby)

Set the power mode setting.

- **Active:** Choose “Active” to return to normal standby.
- **Eco.:** Choose “Eco.” to save power dissipation further < 0.5W.

Setup security menu

Security

Enable this function to prompt for a password before using the projector.

- **On:** Choose “On” to use security verification when the turning on the projector.
- **Off:** Choose “Off” to be able to switch on the projector without password verification.

Security Timer

Can be select the time (Month/Day/Hour) function to set the number of hours the projector can be used. Once this time has elapsed you will be requested to enter your password again.

Change Password

Use to set or modify the password that is prompted when turning the projector on.

USING THE PROJECTOR

Setup test pattern menu

Test Pattern

Select the test pattern from grid, white or disable this function (off).

Setup remote settings menu

IR Function

Set the IR function setting.

- **On:** Choose “On”, the projector can be operated by the remote control from front or top IR receiver.
- **Off:** Choose “Off”, the projector can’t be operated by the remote control from front or top IR receiver. By selecting “Off”, you will be able to use the Keypad keys.

Remote Code

Set remote custom code.

User1/ User2/ User3

Assign the default function for User1, User2, or User3 between HDMI 2, test pattern, brightness, contrast, sleep timer, color matching, color temp, gamma, projection, lamp settings, zoom, freeze, and MHL.

Setup projector ID menu

Projector ID

ID definition can be set up by menu (range 0-99), and allow user control an individual projector by using RS232 command.

Setup options menu

Language

Select the multilingual OSD menu between English, German, French, Italian, Spanish, Portuguese, Polish, Dutch, Swedish, Norwegian/Danish, Finnish, Greek, traditional Chinese, simplified Chinese, Japanese, Korean, Russian, Hungarian, Czechoslovak, Arabic, Thai, Turkish, Farsi, Vietnamese, Indonesian, Romanian, and Slovakian.

Closed Captioning

Closed Captioning is a text version of the program sound or other information displayed on the screen. If the input signal contains closed captions, you can turn on the feature and watch the channels. The available options include “Off”, “CC1”, and “CC2”.

Menu Settings

Set the menu location on the screen and configure menu timer settings.

- **Menu Location**: Select the menu location on the display screen.
- **Menu Timer**: Set the duration where the OSD menu stays visible on the screen.

Input Source

Select the input source between HDMI (Type 3 SVGA/ Type 4 XGA/ Type 5 WXGA/ Type 7 1080p), HDMI1 (Type 2 SVGA/ Type 6 WXGA), HDMI2/MHL (Type 2 SVGA/ Type 6 WXGA), VGA (Type 1 SVGA/ Type 3 SVGA/ Type 4 XGA/ Type 5 WXGA/ Type 6 WXGA/ Type 7 1080p), video (Type 1 SVGA/ Type 3 SVGA/ Type 4 XGA/ Type 5 WXGA/ Type 6 WXGA/ Type 7 1080p).

Input Name

Use to rename the input function for easier identification. The available options include HDMI (Type 3 SVGA/ Type 4 XGA/ Type 5 WXGA/ Type 7 1080p), HDMI1 (Type 2 SVGA/ Type 6 WXGA), HDMI2/MHL (Type 2 SVGA/ Type 6 WXGA), VGA (Type 1 SVGA/ Type 3 SVGA/ Type 4 XGA/ Type 5 WXGA/ Type 6 WXGA/ Type 7 1080p), video (Type 1 SVGA/ Type 3 SVGA/ Type 4 XGA/ Type 5 WXGA/ Type 6 WXGA/ Type 7 1080p).

High Altitude

When “On” is selected, the fans will spin faster. This feature is useful in high altitude areas where the air is thin.

Display Mode Lock

Choose “On” or “Off” to lock or unlock adjusting display mode settings.

Keypad Lock

When the keypad lock function is “On”, the Keypad will be locked. However, the projector can be operated by the remote control. By selecting “Off”, you will be able to reuse the Keypad.

Information Hide

Enable this function to hide the information message.

- **On:** Choose “On” to hide the info message.
- **Off:** Choose “Off” to show the “searching” message.

Logo

Use this function to set the desired startup screen. If changes are made, they will take effect the next time the projector is powered on.

- **Default:** The default startup screen.
- **Neutral:** Logo is not displayed on startup screen.

Background Color

Use this function to display a blue, red, green, grey color, none, or logo screen when no signal is available.

Setup reset all menu

Reset

Return the factory default settings for Setup menu settings.

Info menu

Info menu

View the projector information as listed below:

- Regulatory
- Serial Number
- Current Input Source
- Resolution
- Refresh Rate
- Projector ID
- Display Mode
- Power mode(standby)
- Brightness Mode
- Filter Hours
- Lamp Hours
- FW Version

MAINTENANCE

Replacing the lamp

The projector automatically detects the lamp life. When the lamp life is nearing the end of use, a warning message will appear on the screen.

When you see this message, please contact your local reseller or service center to change the lamp as soon as possible. Make sure the projector has been cooled down for at least 30 minutes before changing the lamp.

Warning: If ceiling mounted, please use caution when opening the lamp access panel. It is recommended to wear safety glasses if changing the bulb when ceiling mounted. Caution must be used to prevent any loose parts from falling out of projector.

Warning: Lamp compartment is hot! Allow it to cool down before changing lamp!

Warning: To reduce the risk of personal injury, do not drop the lamp module or touch the lamp bulb. The bulb may shatter and cause injury if it is dropped.

MAINTENANCE

Replacing the lamp (continued)

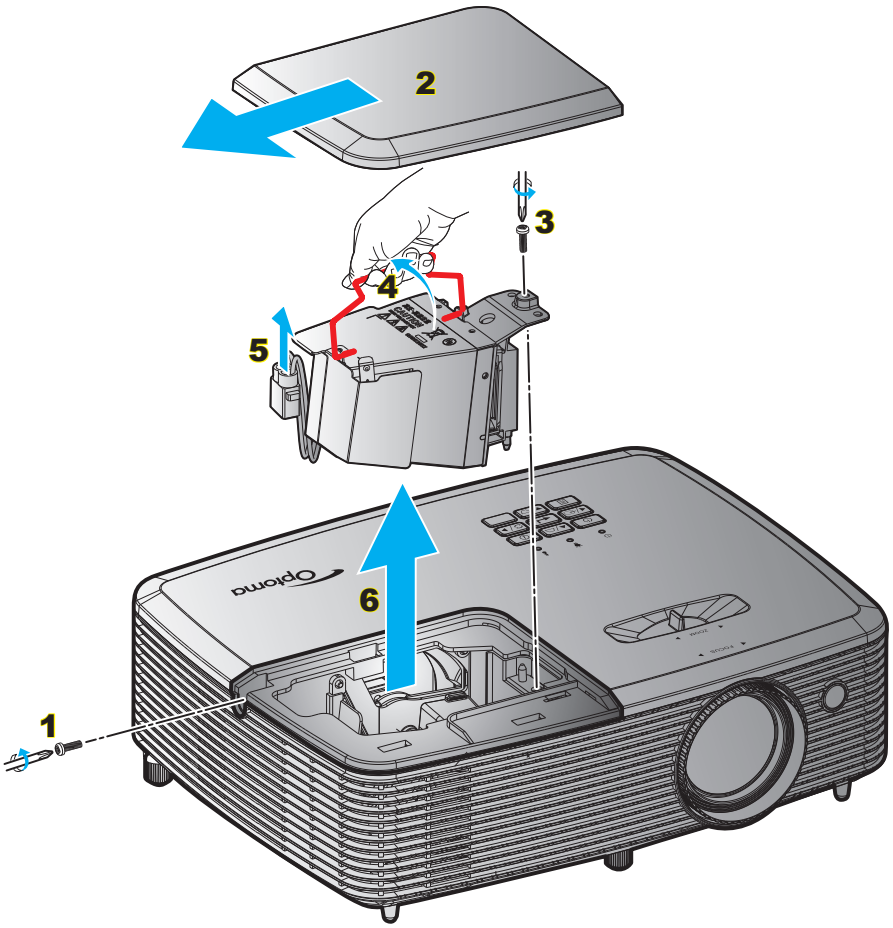

Procedure:

1. Switch off the power to the projector by pressing the "⏻" button on the remote control or the projector keypad.
2. Allow the projector to cool down for at least 30 minutes.
3. Disconnect the power cord.
4. Unscrew the screw on the cover. 1
5. Remove the cover. 2
6. Unscrew the screw on the lamp module. 3
7. Lift up the lamp handle. 4
8. Remove the lamp cord. 5
9. Remove the lamp module carefully. 6
10. To replace the lamp module, reverse the previous steps.
11. Turn on the projector and reset the lamp timer.
12. Lamp Reset: (i) Press "Menu" → (ii) Select "Setup" → (iii) Select "Lamp Settings" → (iv) Select "Lamp Reset" → (v) Select "Yes".

Note:

- *The screw on the lamp cover and the lamp cannot be removed.*
- *The projector cannot be turned on if the lamp cover has not been placed back on the projector.*
- *Do not touch the glass area of the lamp. Hand oil can cause the lamp shatter. Use a dry cloth to clean the lamp module if it was accidentally touched.*

MAINTENANCE

Installing and cleaning the dust filter

Installing the dust filter

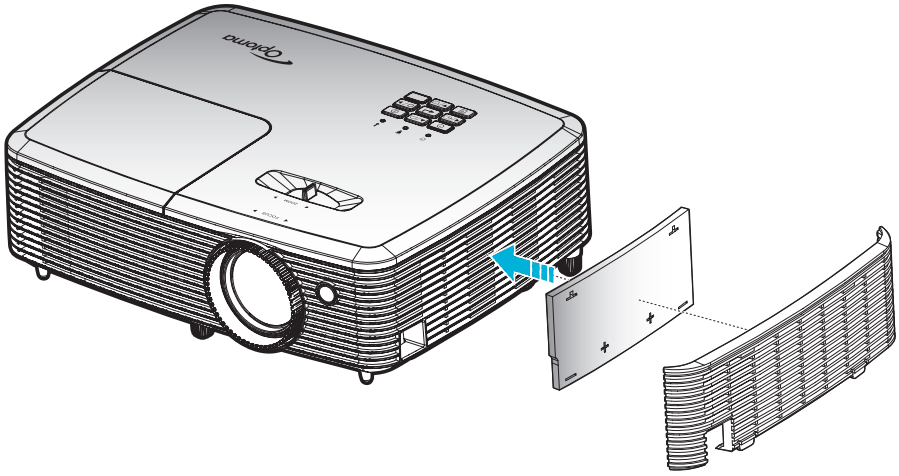

Note: *Dust filters are only required/supplied in the selected regions with excessive dust.*

Cleaning the dust filter

We recommend you to clean the dust filter every three months. Clean it more often if the projector is used in a dusty environment.

Procedure:

1. Switch off the power to the projector by pressing the "⏻" button on the remote control or the projector keypad.
2. Disconnect the power cord.
3. Remove the dust filter carefully. 1
4. Clean or replace the dust filter. 2
5. To install the dust filter, reverse the previous steps.

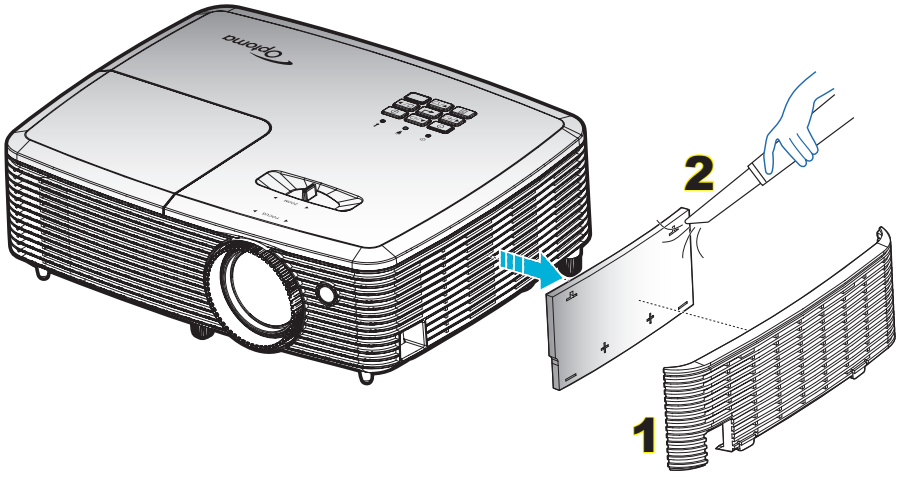

ADDITIONAL INFORMATION

Compatible resolutions

Digital compatibility

B0/Established Timing	B0/Standard Timing	B0/Detail Timing	B1/Video Mode	B1/Detail Timing
720x400 @ 70Hz	SVGA:	Native timing:	640x80p @ 60Hz	720x480p @ 60Hz
640x480 @ 60Hz	800x600 @ 120Hz	XGA: 1024x768 @ 60Hz	720x480p @ 60Hz	1280x720p @ 60Hz
640x480 @ 67Hz	1024x768 @ 120Hz	WXGA: 1280x800 @ 60Hz; 1280x720 @ 60Hz	1280x720p @ 60Hz	1366x768 @ 60Hz
640x480 @ 72Hz	1280x800 @ 60Hz	1080P: 1920x1080 @ 60Hz	1920x1080i @ 60Hz	1920x1080i @ 50Hz
640x480 @ 75Hz	1280x1024 @ 60Hz		720(1440)x480i @ 60Hz	1920x1080p @ 60Hz
800x600 @ 56Hz	1680x1050 @ 60Hz		1920x1080p @ 60Hz	
800x600 @ 60Hz	1280x720 @ 60Hz		720x576p @ 50Hz	
800x600 @ 72Hz	1280x720 @ 120Hz		1280x720p @ 50Hz	
800x600 @ 75Hz	1600x1200 @ 60Hz		1920x1080i @ 50Hz	
832x624 @ 75Hz	XGA/WXGA:		720(1440)x576i @ 50Hz	
1024x768 @ 60Hz	1440x900 @ 60Hz		1920x1080p @ 50Hz	
1024x768 @ 70Hz	1024x768 @ 120Hz		1920x1080p @ 24Hz	
1024x768 @ 75Hz	1280x800 @ 60Hz		1920x1080p @ 30Hz	
1280x1024 @ 75Hz	1280x1024 @ 60Hz			
1152x870 @ 75Hz	1680x1050 @ 60Hz			
	1280x720 @ 60Hz			
	1280x720 @ 120Hz			
	1600x1200 @ 60Hz			
	1080P:			
	1280x720 @ 60Hz			
	1280x800 @ 60Hz			
	1280x1024 @ 60Hz			
	1400x1050 @ 60Hz			
	1600x1200 @ 60Hz			
	1440x900 @ 60Hz			
	1280x720 @ 120Hz			
	1024x768 @ 120Hz			

ADDITIONAL INFORMATION

Analog compatibility

B0/Established Timing	B0/Standard Timing	B0/Detail Timing	B1/Video Mode	B1/Detail Timing
720x400 @ 70Hz	SVGA:	Native timing:		1366x768 @ 60Hz
640x480 @ 60Hz	800x600 @ 120Hz	XGA: 1024x768 @ 60Hz		
640x480 @ 67Hz	1024x768 @ 120Hz	WXGA: 1280x800 @ 60Hz; 1280x720 @ 60Hz		
640x480 @ 72Hz	1280x800 @ 60Hz	1080P: 1920x1080 @ 60Hz		
640x480 @ 75Hz	1280x1024 @ 60Hz			
800x600 @ 56Hz	1680x1050 @ 60Hz			
800x600 @ 60Hz	1280x720 @ 60Hz			
800x600 @ 72Hz	1280x720 @ 120Hz			
800x600 @ 75Hz	1600x1200 @ 60Hz			
832x624 @ 75Hz	XGA/WXGA:			
1024x768 @ 60Hz	1440x900 @ 60Hz			
1024x768 @ 70Hz	1024x768 @ 120Hz			
1024x768 @ 75Hz	1280x800 @ 60Hz			
1280x1024 @ 75Hz	1280x1024 @ 60Hz			
1152x870 @ 75Hz	1680x1050 @ 60Hz			
	1280x720 @ 60Hz			
	1280x720 @ 120Hz			
	1600x1200 @ 60Hz			
	1080P:			
	1280x720 @ 60Hz			
	1280x800 @ 60Hz			
	1280x1024 @ 60Hz			
	1400x1050 @ 60Hz			
	1600x1200 @ 60Hz			
	1440x900 @ 60Hz			
	1280x720 @ 120Hz			
	1024x768 @ 120Hz			

ADDITIONAL INFORMATION

True 3D video compatibility

Input resolution	HDMI 1.4a 3D Input	Input timing		
		1280x720P @ 50Hz	Top - and - Bottom	
		1280x720P @ 60Hz	Top - and - Bottom	
		1280x720P @ 50Hz	Frame packing	
		1280x720P @ 60Hz	Frame packing	
		1920x1080i @ 50 Hz	Side- by-Side (Half)	
		1920x1080i @ 60 Hz	Side- by-Side (Half)	
		1920x1080P @ 24 Hz	Top - and- Bottom	
		1920x1080P @ 24 Hz	Frame packing	
	HDMI 1.3	1920x1080i @ 50Hz	Side-by-Side(Half)	SBS mode is on
		1920x1080i @ 60Hz		
		1280x720P @ 50Hz		
		1280x720P @ 60Hz		
		800 x 600 @ 60Hz		
		1024 x 768 @ 60Hz		
		1280 x 800 @ 60Hz		
		1920x1080i @ 50Hz	Top-and-Bottom	TAB mode is on
		1920x1080i @ 60Hz		
		1280x720P @ 50Hz		
		1280x720P @ 60Hz		
		800x600 @ 60Hz		
		1024x768 @ 60Hz		
		1280x800 @ 60Hz		
		480i	HQFS	3D format is Frame sequential

Note:

- *If 3D input is 1080p@24hz, the DMD should replay with integral multiple with 3D mode.*
- *Support NVIDIA 3DTV Play if there is no patent fee from Optoma. 1080i@25hz and 720p@50hz will run in 100 hz; other 3D timing will run in 120hz.*
- *1080p@24hz will run in 144Hz.*

ADDITIONAL INFORMATION

Image size and projection distance

(1080P)

Diagonal Length Size of (16:9) Screen	Screen Size W x H				Projection Distance (D)				Offset	
	(m)		(inch)		(m)		(inch)			
	Width	Height	Width	Height	Wide	Tele	Wide	Tele	(m)	(inch)
36	0.80	0.45	31.38	17.65	1.2	1.3	3.94	4.27	0.07	2.76
40	0.89	0.5	34.86	19.6	1.3	1.4	4.27	4.59	0.08	3.15
50	1.11	0.62	43.58	24.5	1.6	1.8	5.25	5.91	0.10	3.94
60	1.33	0.75	52.29	29.4	2.0	2.2	6.56	7.22	0.12	4.72
70	1.55	0.87	61.01	34.3	2.3	2.5	7.55	8.20	0.14	5.51
80	1.77	1	69.73	39.2	2.6	2.9	8.53	9.51	0.16	6.30
90	1.99	1.12	78.44	44.1	2.9	3.2	9.51	10.50	0.18	7.09
100	2.21	1.25	87.16	49	3.3	3.6	10.83	11.81	0.19	7.48
120	2.66	1.49	104.59	58.8	3.9	4.3	12.80	14.11	0.24	9.45
150	3.32	1.87	130.74	73.5	4.9	5.4	16.08	17.72	0.30	11.81
180	3.98	2.24	156.88	88.2	5.9	6.5	19.36	21.33	0.36	14.17
200	4.43	2.49	174.32	98.1	6.6	7.2	21.65	23.62	0.40	15.75
250	5.53	3.11	217.89	122.6	8.2	9.0	26.90	29.53	0.50	19.69
300	6.64	3.74	261.47	147.1	9.8	10.8	32.15	35.43	0.59	23.23

Note: *Zoom ratio is 1.1x.*

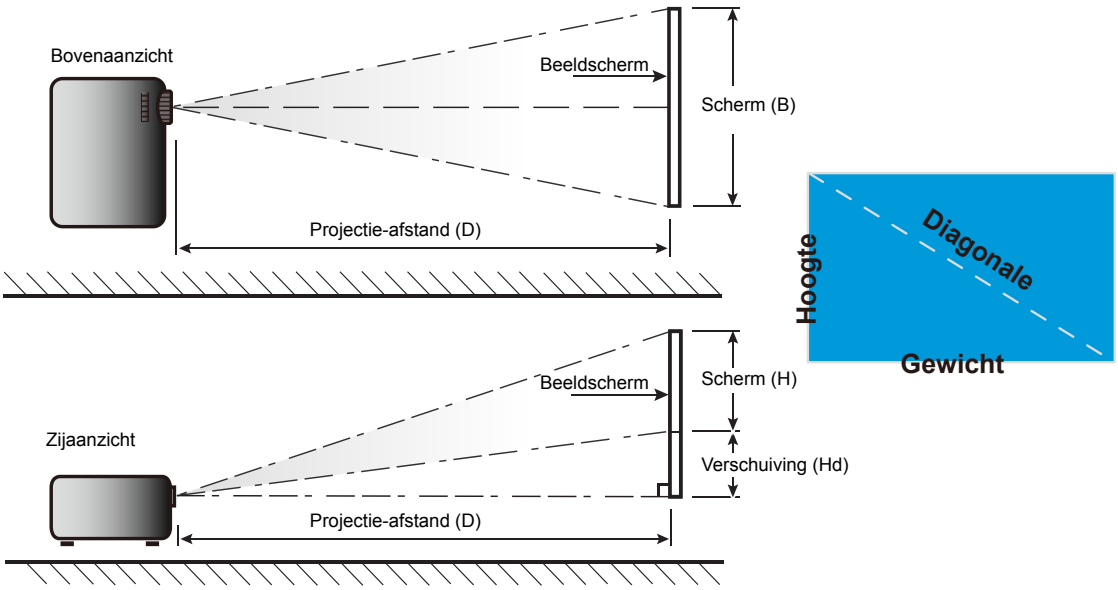

ADDITIONAL INFORMATION

Projector dimensions and ceiling mount installation

1. To prevent damage to your projector, please use the Optoma ceiling mount.
2. If you wish to use a third party ceiling mount kit, please ensure the screws used to attach a mount to the projector meet the following specifications:

- Screw type: M4*3
- Minimum screw length: 10mm

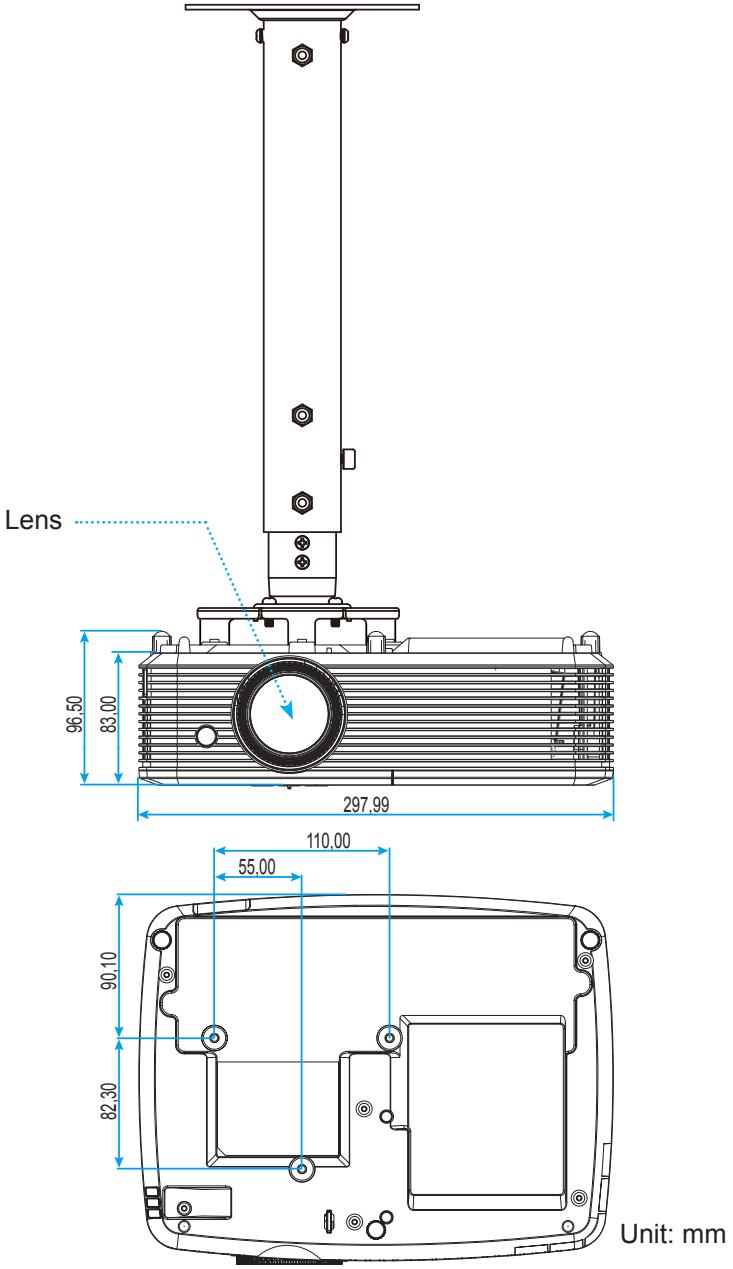

Note: *Please note that damage resulting from incorrect installation will void the warranty.*

Warning:

- If you buy a ceiling mount from another company, please be sure to use the correct screw size. Screw size will vary depending on the thickness of the mounting plate.
- Be sure to keep at least 10 cm gap between the ceiling and the bottom of the projector.
- Avoid installing the projector near a heat source.

ADDITIONAL INFORMATION

IR remote codes

Key legend		Description	Repeat format	Address		Data	
				byte 1	byte 2	byte 3	byte 4
Power		Press to turn on / off the projector.	F1	32	CD	81	7E
Freeze	Freeze	Press to freeze the projector image.	F1	32	CD	87	78
Aspect		Press to change aspect ratio of a displayed image.	F1	32	CD	98	67
AV mute		Press to turn off/ on projector built-in speaker	F1	32	CD	8A	75
Keystone+/up	Keystone+	• Press to adjust image distortion caused by tilting the projector. • Press to navigate up.	F2	32	CD	85	7A
Mute		Press to momentarily turn off / on the audio.	F1	32	CD	92	6D
Left/Vol-	Vol–	• Press to adjust to decrease the volume. • Press to navigate left.	F2	32	CD	8F	70
Enter		Confirm your item selection.	F1	32	CD	C5	3A
Right/Vol+	Vol+	• Press to adjust to increase the volume. • Press to navigate right.	F2	32	CD	8C	73
Menu		Press to display or exit the on-screen display menus for projector.	F1	32	CD	88	77

ADDITIONAL INFORMATION

Key legend		Description	Repeat format	Address		Data	
				byte 1	byte 2	byte 3	byte 4
Down/Key-stone-	Keystone–	• Press to adjust image distortion caused by tilting the projector. • Press to navigate down.	F2	32	CD	84	7B
3D	3D	Press to manually select a 3D mode that matches your 3D content.	F1	32	CD	93	6C
HDMI	HDMI	Press to choose HDMI source.	F1	32	CD	86	79
VGA	VGA	Press to choose VGA source.	F1	32	CD	8E	71
Video	Video	Press to choose video source.	F1	32	CD	CE	72
Source		Press to select an input signal.	F1	32	CD	C3	3C
Lamp mode		Press to choose lamp mode.	F1	32	CD	C0	3F
ReSync		Automatically synchronize the projector to the input source.	F1	32	CD	C4	3B

ADDITIONAL INFORMATION

Troubleshooting

If you experience a problem with your projector, please refer to the following information. If a problem persists, please contact your local reseller or service center.

Image problems

No image appears on-screen

- Ensure all the cables and power connections are correctly and securely connected as described in the "Installation" section.
- Ensure the pins of connectors are not crooked or broken.
- Check if the projection lamp has been securely installed. Please refer to the "Replacing the Lamp" section.
- Ensure that the "AV Mute" feature is not turned on.

Image is out of focus

- Adjust the Focus Ring on the projector lens.
- Make sure the projection screen is between the required distance from the projector. (Please refer to page *49*).

The image is stretched when displaying 16:9 DVD title

- When you play anamorphic DVD or 16:9 DVD, the projector will show the best image in 16: 9 format on projector side.
- If you play the LBX format DVD title, please change the format as LBX in projector OSD.
- If you play 4:3 format DVD title, please change the format as 4:3 in projector OSD.
- Please setup the display format as 16:9 (wide) aspect ratio type on your DVD player.

Image is too small or too large

- Adjust the zoom lever on the top of the projector.
- Move the projector closer to or further from the screen.
- Press "Menu" on the projector panel, go to "Display-->Aspect Ratio". Try the different settings.

Image has slanted sides:

- If possible, reposition the projector so that it is centered on the screen and below the bottom of the screen.
- Use "Display-->Keystone" from the OSD to make an adjustment.

Image is reversed

- Select "Setup-->Projection" from the OSD and adjust the projection direction.

Blurry double image

- Press "3D" button and switch to "Off" to avoid normal 2D image is blurry double image.

ADDITIONAL INFORMATION

Two images, side-by-side format

- Press "3D" button and switch to "SBS" for input signal is HDMI 1.3 2D 1080i side-by-side.

Image does not display in 3D

- Check if the battery of 3D glasses is drained.
- Check if the 3D glasses is turned on.
- When the input signal is HDMI 1.3 2D (1080i side-by-side half), press "3D" button and switch to "SBS".

Other problems

The projector stops responding to all controls

- If possible, turn off the projector, then unplug the power cord and wait at least 20 seconds before reconnecting power.

Lamp burns out or makes a popping sound

- When the lamp reaches its end of life, it will burn out and may make a loud popping sound. If this happens, the projector will not turn on until the lamp module has been replaced. To replace the lamp, follow the procedures in the "Replacing the Lamp" section on pages *43-44*.

Remote control problems

If the remote control does not work

- Check the operating angle of the remote control is pointed within ±10° to the IR receiver on the projector.
- Make sure there are not any obstructions between the remote control and the projector. Move to within 7 m (23 ft) of the projector.
- Make sure batteries are inserted correctly.
- Replace batteries if they are exhausted.

ADDITIONAL INFORMATION

Warning indicators

When the warning indicators (see below) light up or flash, the projector will automatically shutdown:

- "LAMP" LED indicator is lit red and if "On/Standby" indicator flashes amber.
- "TEMP" LED indicator is lit red and if "On/Standby" indicator flashes amber. This indicates the projector has overheated. Under normal conditions, the project can be switched back on.
- "TEMP" LED indicator flashes red and if "On/Standby" indicator flashes amber.

Unplug the power cord from the projector, wait for 30 seconds and try again. If the warning indicator light up or flash, please contact your nearest service center for assistance.

LED lightning messages

Message	Power LED (Red)	Power LED (Green or Blue)	Temp-LED (Red)	Lamp-LED (Red)
Standby state (Input power cord)	Steady light		○	○
Power on (Warming)		Flashing (0.5 sec off / 0.5 sec on)	○	○
Power on and Lamp lighting		Steady light	○	○
Power off (Cooling)		Flashing (0.5 sec off / 0.5 sec light). Back to red steady light when cooling fan turns off.	○	○
Quick Resume (100 secs)		Flashing (0.25 sec off / 0.25 sec light)	○	○
Error (Over temp.)	Flashing		☼	○
Error (Fan failure)	Flashing		Flashing	
Error (Lamp failure)	Flashing			☼

- Power off:

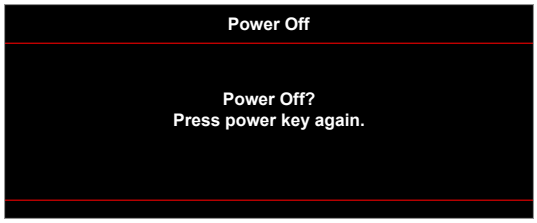

- Lamp warning:

ADDITIONAL INFORMATION

- Temperature warning:

- Fan failed:

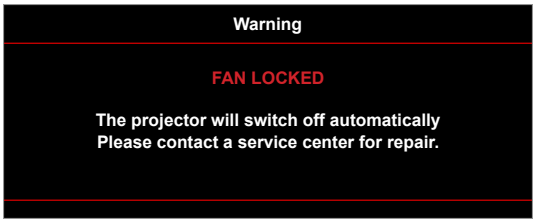

- Out of display range:

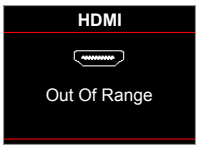

- Power down warning:

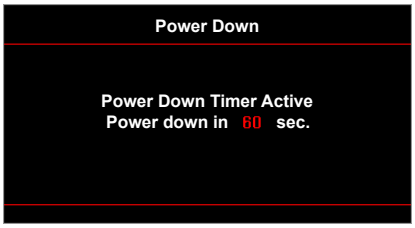

- Security timer alarm:

USING THE PROJECTOR

Specifications

Optical	Description
Maximum resolution	UXGA, 1600x1200, 60Hz WUXGA for WXGA 16:10
Native resolution	SVGA/XGA/WXGA/1080p
Lens	- Manual zoom and manual focus
Lamp life	- Bright Mode (Normal Mode) 5000 Hours Standard @190W, 50% Survival Rate - STD Mode (ECO Mode) 6000 Hours Typical @160W, 50% Survival Rate - Dynamic mode 6500 Hours - DE Mode in education cycle 10000 Hours
Image size (diagonal)	22.9” ~ 252” (overdrive to 300”)
Projection distance	1m ~ 10m (focus range) (overdrive to 12m)

Electrical	Description
Inputs	- HDMI 1.4a - HDMI 1.4a + MHL (v2.2) - VGA-IN (YPbPr / RGB) - Audio 3.5mm
Outputs	- VGA - Audio 3.5mm - USB-A power
Control	- RS232 - USB mouse / service
Color reproduction	1073.4 Million color
Scan rate	- Horizontal scan rate: 15.375~91.146 KHz - Vertical scan rate: 24~ 85 Hz (120Hz for 3D feature projector)
Built-in speaker	Yes, 10W
Power requirement	100 - 240V AC 50/60Hz
Input current	2.5-1.0 A

Mechanical	Description
Installation orientation	Front, Rear, Ceiling - Front, Rear - top
Dimensions	- 298 mm (W) x 230 mm (D) x 83 mm (H) (without feet) - 298 mm (W) x 230 mm (D) x 96.5 mm (H) (with feet)
Weight	2.5 kg
Environmental conditions	Operating in 5 ~ 40°C , 10% to 85% humidity (non-condensing)

Note: *All specifications are subject to change without notice.*

USING THE PROJECTOR

Optoma global offices

For service or support, please contact your local office.

USA
3178 Laurelview Ct.
Fremont, CA 94538, USA
www.optomausa.com

888-289-6786
510-897-8601
services@optoma.com

Canada
3178 Laurelview Ct.
Fremont, CA 94538, USA
www.optomausa.com

888-289-6786
510-897-8601
services@optoma.com

Latin America
3178 Laurelview Ct.
Fremont, CA 94538, USA
www.optomausa.com

888-289-6786
510-897-8601
services@optoma.com

Europe
42 Caxton Way, The Watford Business Park
Watford, Hertfordshire,
WD18 8QZ, UK
www.optoma.eu
Service Tel : +44 (0)1923 691865

+44 (0) 1923 691 800
+44 (0) 1923 691 888
service@tsc-europe.com

Benelux BV
Randstad 22-123
1316 BW Almere
The Netherlands
www.optoma.nl

+31 (0) 36 820 0252
+31 (0) 36 548 9052

France
Bâtiment E
81-83 avenue Edouard Vaillant
92100 Boulogne Billancourt, France

+33 1 41 46 12 20
+33 1 41 46 94 35
savoptoma@optoma.fr

Spain
C/ José Hierro,36 Of. 1C
28522 Rivas VaciaMadrid,
Spain

+34 91 499 06 06
+34 91 670 08 32

Deutschland
Wiesenstrasse 21 W
D40549 Düsseldorf,
Germany

+49 (0) 211 506 6670
+49 (0) 211 506 66799
info@optoma.de

Scandinavia
Lerpeveien 25
3040 Drammen
Norway

+47 32 98 89 90
+47 32 98 89 99
info@optoma.no

PO.BOX 9515
3038 Drammen
Norway

Korea
WOOMI TECH.CO.,LTD.
4F, Minu Bldg.33-14, Kangnam-Ku,
Seoul,135-815, KOREA
korea.optoma.com

+82+2+34430004
+82+2+34430005

Japan
東京都足立区綾瀬3-25-18
株式会社オーエス
コンタクトセンター:0120-380-495

info@os-worldwide.com
www.os-worldwide.com

Taiwan
12F., No.213, Sec. 3, Beixin Rd.,
Xindian Dist., New Taipei City 231,
Taiwan, R.O.C.
www.optoma.com.tw

+886-2-8911-8600
+886-2-8911-6550
services@optoma.com.tw
asia.optoma.com

Hong Kong
Unit A, 27/F Dragon Centre,
79 Wing Hong Street,
Cheung Sha Wan,
Kowloon, Hong Kong

+852-2396-8968
+852-2370-1222
www.optoma.com.hk

China
5F, No. 1205, Kaixuan Rd.,
Changning District
Shanghai, 200052, China

+86-21-62947376
+86-21-62947375
www.optoma.com.cn