USA's primary source for projector lamps
myprojectorlamps

PROJECTOR OWNER'S MANUAL

Optoma

DS340e / DX342 / S310e / X312

Need a replacement lamp for this projector?

www.myprojectorlamps.com

Original manufacturer manual, provided unmodified as a courtesy of MyProjectorLamps.com.
All trademarks belong to their respective owners.

Table of Contents

Table of Contents 1
Usage Notice 2
Safety Information.....2
Precautions 3
Eye Safety Warnings 5
Product Features 5
Introduction.....6
Package Overview.....6
Product Overview 7
Main Unit..... 7
Control Panel 8
Input/Output Connections 9
Remote Control..... 10
Installation 11
Connecting the Projector 11
Connect to Computer/Notebook 11
Connect to Video Sources 12
Powering the Projector On / Off.....13
Powering On the Projector..... 13
Powering off the projector..... 14
Warning Indicator..... 14
Adjusting the Projected Image.....15
Adjusting the Projector's Height 15
Adjusting the Projector's Zoom / Focus 16
Adjusting Projection Image Size 16
User Controls 18
Control Panel & Remote Control 18
Control Panel 18
Remote Control Battery Installation ... 19
Remote Control..... 20
On-screen Display Menus 24
How to operate 24
Menu Tree..... 25
IMAGE 27
IMAGE | Advanced 29
IMAGE | Advanced | Signal (RGB) ... 31
DISPLAY..... 32
DISPLAY | 3D 34
SETUP..... 35
SETUP | Security 37
SETUP | Audio Settings 39
SETUP | Advanced 40
OPTIONS..... 41
OPTIONS | Advanced..... 43
OPTIONS | Lamp Settings..... 44
OPTIONS | Optional Filter Settings ... 45
Appendices.....46
Troubleshooting 46
Replacing the Lamp.....52
Installing and Cleaning the Dust Filter.....54
Compatibility Modes 55
Computer/Video/HDMI/Mac Compatibility 55
3D Input Video Compatibility 56
RS232 Commands and Protocol Function List 57
RS232 Pin Assignments 57
RS232 Protocol Function List 58
Ceiling Mount Installation.....62
Optoma Global Offices 63
Regulation & Safety Notices.....65

Safety Information

	The lightning flash with arrow head within an equilateral triangle is intended to alert the user to the presence of uninsulated “dangerous voltage” within the product’s enclosure that may be of sufficient magnitude to constitute a risk of electric shock to persons.
	The exclamation point within an equilateral triangle is intended to alert the user to the presence of important operating and maintenance (servicing) instructions in the literature accompanying the appliance.

WARNING: TO REDUCE THE RISK OF FIRE OR ELECTRIC SHOCK, DO NOT EXPOSE THIS APPLIANCE TO RAIN OR MOISTURE. DANGEROUS HIGH VOLTAGES ARE PRESENT INSIDE THE ENCLOSURE. DO NOT OPEN THE CABINET. REFER SERVICING TO QUALIFIED PERSONNEL ONLY.

Class B emissions limits

This Class B digital apparatus meets all requirements of the Canadian Interference-Causing Equipment Regulations.

Important Safety Instruction

1. Do not block any ventilation openings. To ensure reliable operation of the projector and to protect from over heating, it is recommended to install the projector in a location that does not block ventilation. As an example, do not place the projector on a crowded coffee table, sofa, bed, etc. Do not put the projector in an enclosure such as a book case or a cabinet that restricts air flow.
2. Do not use the projector near water or moisture. To reduce the risk of fire and/or electric shock, do not expose the projector to rain or moisture.
3. Do not install near heat sources such as radiators, heaters, stoves or any other apparatus such as amplifiers that emits heat.
4. Clean only with dry cloth.
5. Only use attachments/accessories specified by the manufacturer.
6. Do not use the unit if it has been physically damaged or abused. Physical damage/abuse would be (but not limited to):
   - ❒ Unit has been dropped.
   - ❒ Power supply cord or plug has been damaged.
   - ❒ Liquid has been spilled on to the projector.
   - ❒ Projector has been exposed to rain or moisture.
   - ❒ Something has fallen in the projector or something is loose inside.

   Do not attempt to service the unit yourself. Opening or removing covers may expose you to dangerous voltages or other hazards. Please call Optoma before you send the unit for repair.
7. Do not let objects or liquids enter the projector. They may touch dangerous voltage points and short out parts that could result in fire or electric shock.
8. See projector enclosure for safety related markings.
9. The unit should only be repaired by appropriate service personnel.

Precautions

Please follow all warnings, precautions and maintenance as recommended in this user's guide.

- Warning- Do not look into the projector's lens when the lamp is on. The bright light may hurt and damage your eyes.
- Warning- To reduce the risk of fire or electric shock, do not expose this projector to rain or moisture.
- Warning- Please do not open or disassemble the projector as this may cause electric shock.
- Warning- When replacing the lamp, please allow the unit to cool down. Follow instructions as described on pages 52-53.
- Warning- This projector will detect the life of the lamp itself. Please be sure to change the lamp when it shows warning messages.
- Warning- Reset the "Lamp Reset" function from the on-screen display "OPTIONS | Lamp Settings" menu after replacing the lamp module (refer to page 44).
- Warning- When switching the projector off, please ensure the cooling cycle has been completed before disconnecting power. Allow 90 seconds for the projector to cool down.
- Warning- When the lamp is approaching the end of its lifetime, the message "Lamp Warning: Lamp life exceeded." will show on the screen. Please contact your local reseller or service center to change the lamp as soon as possible.
- Warning- Not all projectors come with a lens cap. For your safety, if the projector is equipped with a lens cap please ensure to remove it before you turn on the projector.

NOTE

- When the lamp reaches the end of its life, the projector will not turn back on until the lamp module has been replaced. To replace the lamp, follow the procedures listed under "Replacing the Lamp" section on pages 52-53.

Usage Notice

Do:

- Turn off and unplug the power plug from the AC outlet before cleaning the product.
- Use a soft dry cloth with mild detergent to clean the display housing.
- Disconnect the power plug from AC outlet if the product is not being used for a long period of time.

Do not:

- Block the slots and openings on the unit provided for ventilation.
- Use abrasive cleaners, waxes or solvents to clean the unit.
- Use under the following conditions:
  - In extremely hot, cold or humid environments.
    - Ensure that the ambient room temperature is within 5 - 40°C.
    - Relative Humidity is 5 - 40°C, 80% (Max.), non-condensing.
  - In areas susceptible to excessive dust and dirt.
  - Near any appliance generating a strong magnetic field.
  - In direct sunlight.

Eye Safety Warnings

- Avoid staring/facing directly into the projector beam at all times. Keep your back to the beam as much as possible.
- When projector is used in a classroom, adequately supervise students when they are asked to point out something on the screen.
- In order to minimize the lamp power, use room blinds to reduce ambient light levels.

Product Features

- SVGA (800x600) / XGA (1024x768) Native resolution
- HD compatible – 720p and 1080p supported
- BrilliantColor™ Technology
- Kensington Lock
- RS232 control
- Rapid shutdown
- Full 3D(*) (See page 56)
- The Product Features shall be configured by the manufacturer as per practical conditions.

NOTE

- (*) For models with HDMI Input.
- Product features may vary depending on model.

Package Overview

Unpack and inspect the box contents to ensure all parts listed below are in the box. If something is missing, please contact your nearest customer service center.

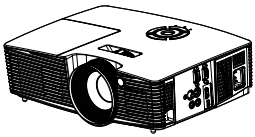

Projector

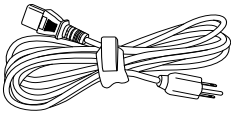

Power Cord

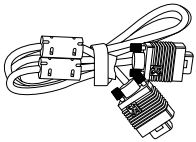

VGA Cable(*)

Battery

IR Remote Control

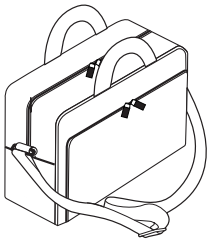

Carrying case*1

NOTE

- Due to different applications in each Country, some regions may have different accessories.

NOTE

- *1 The accessory depends on model's specifications.
- *2 For European warrant information please visit www.optomaeurope.com

Documentation :

- ☑ User's Manual
- ☑ Warranty Card*2
- ☑ Quick Start Card

Product Overview

Main Unit

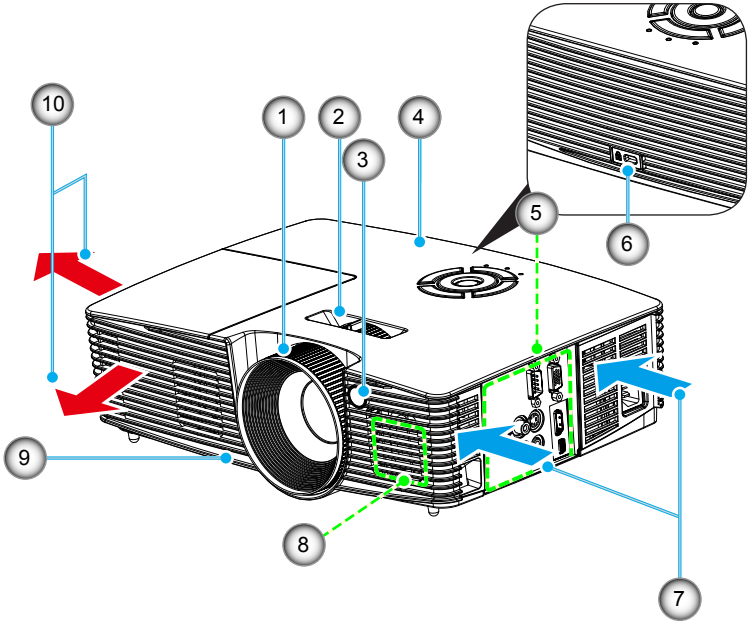

- The interface is subject to model's specifications.
- Do not block projector in/out air vents.

1. Focus Ring
2. Zoom Lever
3. IR Receiver
4. Control Panel
5. Input / Output Connections
6. Kensington™ Lock Port
7. Ventilation (inlet)
8. Speaker
9. Tilt-Adjustment Feet
10. Ventilation (outlet)

Control Panel

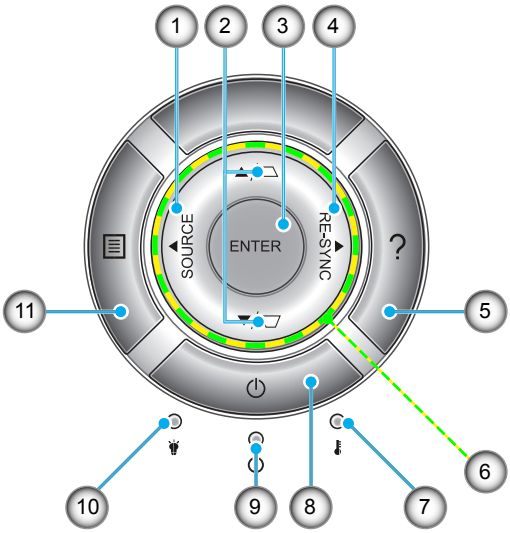

1. Source
2. Keystone Correction
3. Enter
4. Re-Sync
5. Help
6. Four Directional Select Keys
7. Temp LED
8. Power
9. On/Standby LED
10. Lamp LED
11. Menu

Input/Output Connections

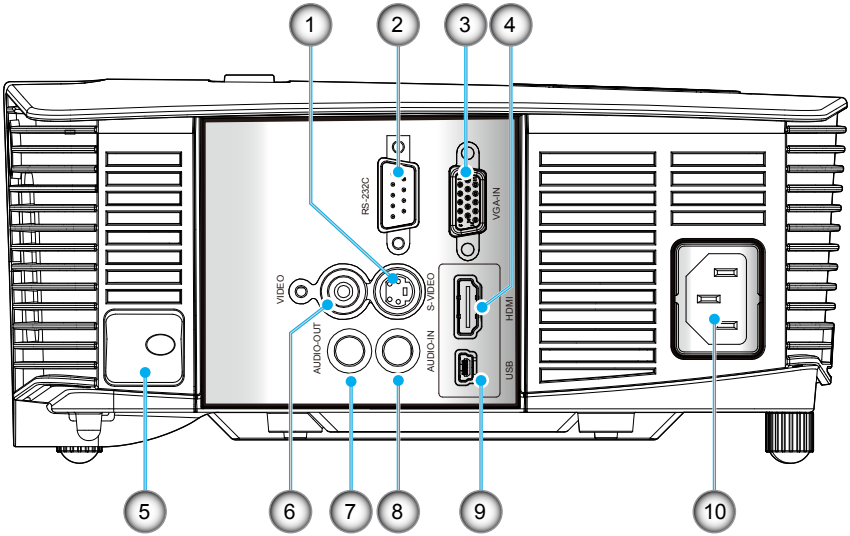

1. S-Video Input Connector
2. RS-232 Connector (9-pin)
3. VGA-IN/YPbPr Connector
   (PC Analog Signal/Component Video Input/HDTV/YPbPr)
4. HDMI Connector (*)
5. Security Lock Slot
6. Composite Video Input Connector
7. Audio Output Connector (3.5mm mini jack) (*)
8. Audio Input Connector (3.5mm mini jack) (*)
9. USB Service for firmware upgrade
10. Power Socket

NOTE

❖ (*) The interface is subject to model's specifications.

Remote Control

- The interface is subject to model's specifications.

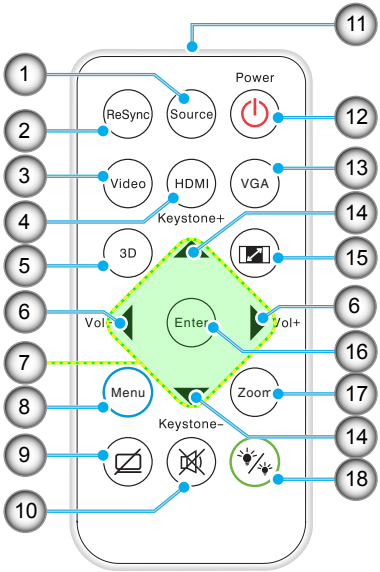

1. Source
2. Re-Sync
3. Composite Video and S-video
4. HDMI
5. 3D
6. Volume +/-
7. Four Directional Select Keys
8. Menu
9. AV Mute
10. Mute
11. IR LED Indicator
12. Power On/Off
13. VGA
14. Keystone +/-
15. Aspect ratio
16. Enter
17. Zoom
18. Brightness Mode

- Before using the remote control for the first time, remove the transparent insulation tape. See page 19 for battery installation.

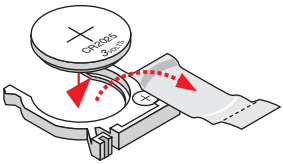

Connecting the Projector

Connect to Computer/Notebook

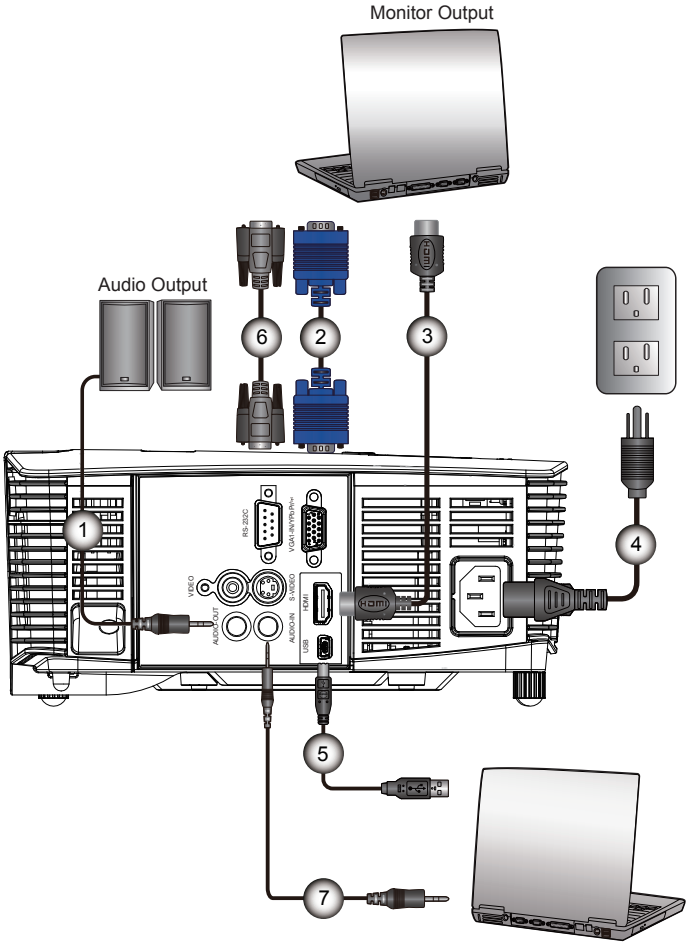

Note

- Due to the difference in applications for each country, some regions may have different accessories.
- (*) Optional accessory
- The interface is subject to model's specifications .

1.....*Audio Output Cable
2.....*VGA Out Cable
3.....*HDMI Cable
4.....Power Cord
5.....*USB Cable
6.....*RS232 Cable
7.....*Audio Input Cable

Connect to Video Sources

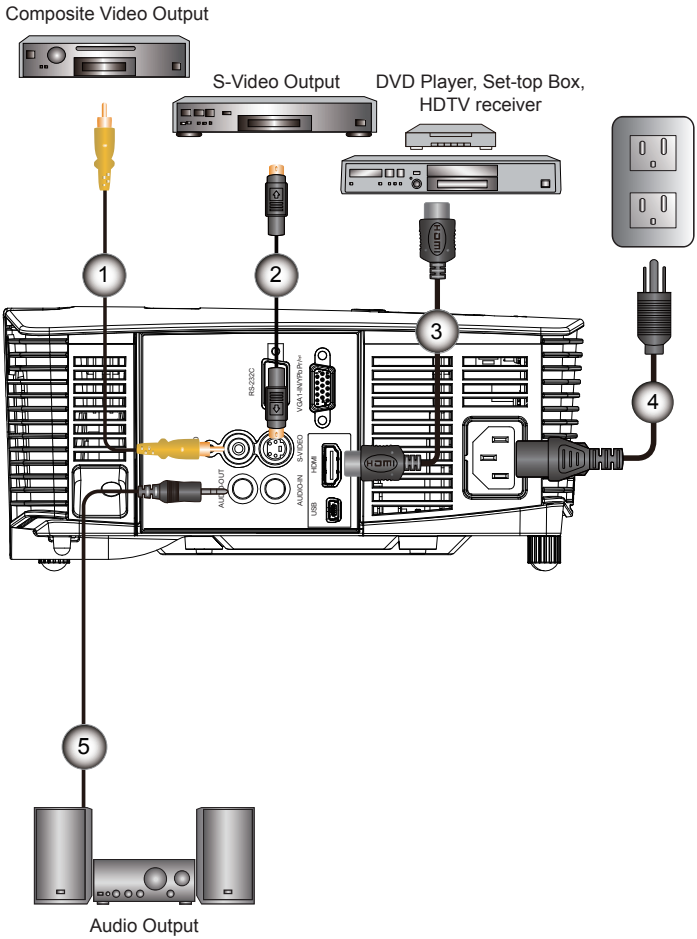

- Due to the difference in applications for each country, some regions may have different accessories.
- (*) Optional accessory
- The interface is subject to model's specifications .

1.....*Composite Video Cable
2.....*S-Video Cable
3.....*HDMI Cable
4.....Power Cord
5.....*Audio Output Cable

Powering the Projector On / Off

Powering On the Projector

1. Securely connect the power cord and signal cable. When connected, the ON/STANDBY LED will turn red.
2. Turn on the lamp by pressing "⏻" button either on the top of the projector or on the remote. The ON/STANDBY LED will now turn blue. ❶

   The startup screen will display in approximately 10 seconds. The first time you use the projector, you will be asked to select the preferred language and power saving mode.
3. Turn on and connect the source that you want to display on the screen (computer, notebook, video player, etc). The projector will detect the source automatically. If not, push menu button and go to "OPTIONS".
   Make sure that the "Source Lock" has been set to "Off".

❖ If you connect multiple sources at the same time, press the "SOURCE" button on the control panel or direct source keys on the remote control to switch between inputs.

NOTE

❖ When Power mode (Standby) is set to Eco (<0.5W), the VGA output and Audio pass-through will be deactivated when the projector is in standby.

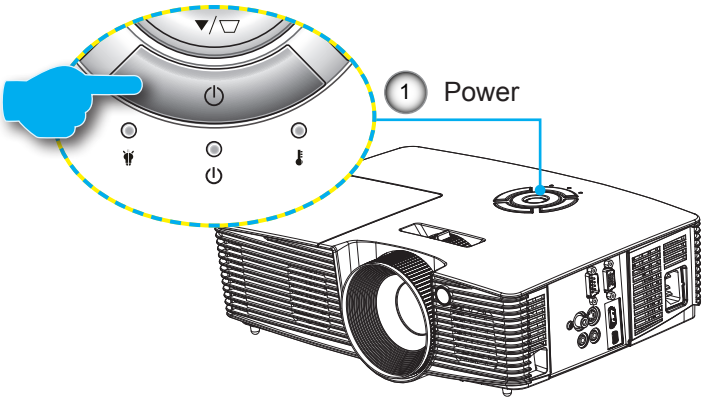

NOTE

❖ Turn on the projector first and then select the signal sources.

Powering off the projector

1. Press the "⏻" button on the remote control or on the control panel to turn off the projector.
   The following message will be displayed on the screen.

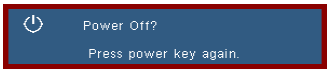

   Press the "⏻" button again to confirm otherwise the message will disappear after 15 seconds. The projector will shut down when the "⏻" button is pressed for the second time.
2. The fans will continue to operate for 10 seconds and the ON/STANDBY LED will flash blue. During this period, the projector cannot be turned back on and the projector should not be unplugged.

   Once the cooling cycle is complete, the ON/STANDBY LED will turn to solid red (standby mode). At this point, the projector can be turned back on by pushing the "⏻" button.
3. Disconnect the power cord from the electrical outlet and the projector.
4. Do not turn on the projector immediately following a power off procedure.

Warning Indicator

When the warning indicators (see below) come on, the projector will automatically shutdown:

- "LAMP" LED indicator is lit red and if "On/Standby" indicator flashes amber.
- "TEMP" LED indicator is lit red and if "On/Standby" indicator flashes amber. This indicates the projector has overheated. Under normal conditions, the projector can be switched back on.
- "TEMP" LED indicator flashes red and if "On/Standby" indicator flashes amber.

Unplug the power cord from the projector, wait for 30 seconds and try again. If the warning indicator light up again, please contact your nearest service center for assistance.

NOTE

- Contact the nearest service center if the projector displays these symptoms. See pages 63-64 for more information.

Adjusting the Projected Image

Adjusting the Projector's Height

The projector is equipped with elevator feet for adjusting the image height.

1. Locate the adjustable foot you wish to modify on the underside of the projector.
2. Rotate the adjustable ring clockwise to raise the projector or counter clockwise to lower it. Repeat with the remaining feet as needed.

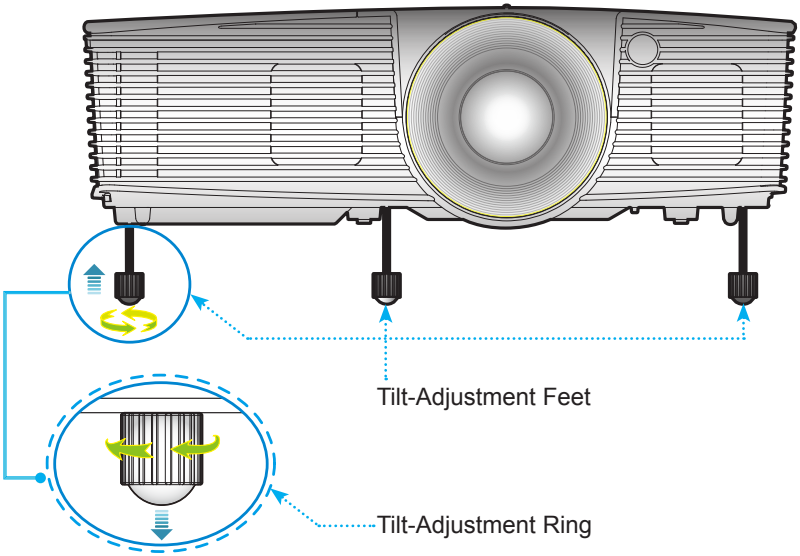

Adjusting the Projector's Zoom / Focus

You may turn the zoom ring to zoom in or out. To focus the image, rotate the focus ring until the image is clear.

- SVGA/XGA series: The projector will focus at distances from 3.28 to 39.4 feet (1.0 to 12.0 meters).

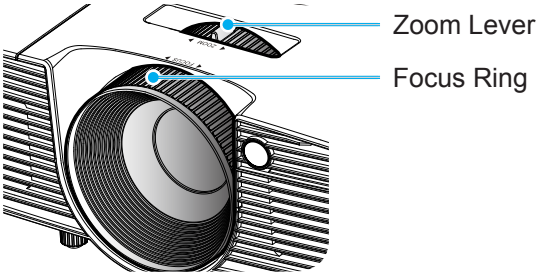

Adjusting Projection Image Size

- SVGA/XGA series: Projection Image Size from 22.9" to 300.0" (0.58 to 7.62 meters).

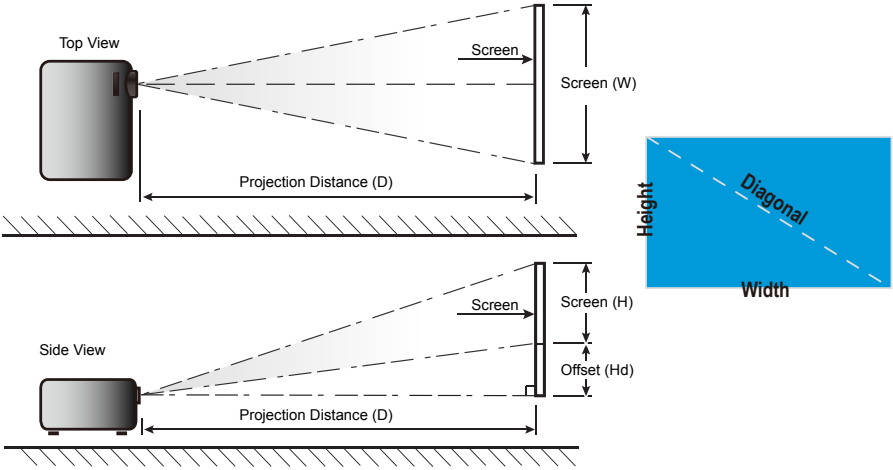

SVGA/XGA

Diagonal length (inch) size of 4:3 Screen	Screen Size W x H				Projection Distance (D)				Offset (Hd)	
	(m)		(inch)		(m)		(feet)			
	Width	Height	Width	Height	wide	tele	wide	tele	(m)	(inch)
30.00	0.61	0.46	24.00	18.00	1.19	1.31	3.90	4.30	0.07	2.70
40.00	0.81	0.61	32.00	24.00	1.58	1.75	5.20	5.73	0.09	3.60
60.00	1.22	0.91	48.00	36.00	2.38	2.62	7.80	8.60	0.14	5.40
70.00	1.42	1.07	56.00	42.00	2.77	3.06	9.10	10.03	0.16	6.30
80.00	1.63	1.22	64.00	48.00	3.17	3.50	10.40	11.46	0.18	7.20
90.00	1.83	1.37	72.00	54.00	3.57	3.93	11.70	12.90	0.21	8.10
100.00	2.03	1.52	80.00	60.00	3.96	4.37	13.00	14.33	0.23	9.00
120.00	2.44	1.83	96.00	72.00	4.75	5.24	15.60	17.20	0.27	10.80
150.00	3.05	2.29	120.00	90.00	5.94	6.55	19.50	21.49	0.34	13.50
180.00	3.66	2.74	160.00	120.00	7.92	8.74	25.99	28.66	0.46	18.00
250.00	5.08	3.81	200.00	150.00	9.91	10.92	32.49	35.82	0.57	22.49
300.00	6.10	4.57	240.00	180.00	11.89	13.11	38.99	42.99	0.69	26.99

❖ This table is for user's reference only.

Control Panel & Remote Control

Control Panel

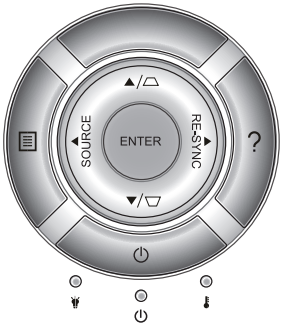

Using the Control Panel		
POWER	⏻	Refer to the “Power On/Off the Projector” section on pages 13-14.
RE-SYNC		Automatically synchronize the projector to the input source.
ENTER		Confirm your item selection.
SOURCE		Press “SOURCE” to select an input signal.
Menu	☰	Press “Menu” to launch the on-screen display (OSD) menu. To exit OSD, Press “Menu” again.
Help	?	Help Menu (only available when OSD menu is not shown).
Four Directional Select Keys		Use ▲ ▼ ◀ ▶ to select items or make adjustments to your selection.
Keystone	⏢ / ⏢	Use ⏢ ⏢ to adjust image distortion caused by tilting the projector. (±40 degrees)
Lamp LED	○	Indicate the projector’s lamp status.
Temp LED	○	Indicate the projector’s temperature status.
ON/STANDBY LED	⏻ ○	Indicate the projector’s status.

Remote Control Battery Installation

1. Press firmly and slide the battery cover off.

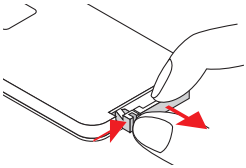

2. Install new battery into the compartment. Remove the old battery and install new one (CR2025). Ensure that the side with a “+” is facing up.
3. Put the cover back.

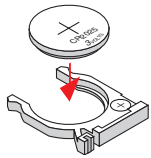

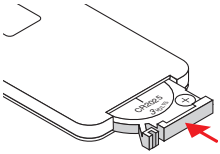

To ensure safe operation, please observe the following pre-cautions :

- Use CR2025 type battery.
- Avoid contact with water or liquid.
- Do not expose the remote control to moisture or heat.
- Do not drop the remote control.
- If the battery has leaked in the remote control, carefully wipe the case clean and install new battery.
- Risk of an explosion if battery is replaced by an incorrect type.
- Dispose of used battery according to the instructions.

Remote Control

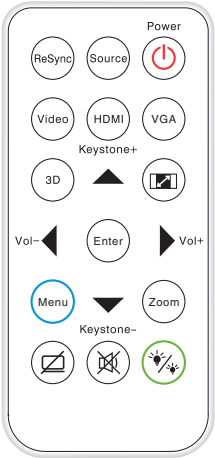

Using the Remote Control		
Power	⏻	Refer to the “Power On/Off the Projector” section on pages 13-14.
Source		Press “Source” to select an input signal.
Re-Sync		Automatically synchronizes the projector to the input source.
Video		Press “Video” to switch between Composite Video or S-video signals.
HDMI		Press “HDMI” to choose HDMI source. (For certain model)
3D		Press the “3D” to turn the 3D OSD menu on/off.
Four Directional Select Keys		Use ▲ ▼ ◀ ▶ to select items or make adjustments to your selection.
AV Mute		Momentarily turns off/on the audio and video.
Enter		Confirm your item selection.
Mute		Momentarily turns off/on the audio. (For certain model)
VGA		Press “VGA” to choose VGA sources.
Keystone +/-		Adjust image distortion caused by tilting the projector.
Aspect		Use this function to choose your desired aspect ratio.
Menu		Press “Menu” to launch the on-screen display (OSD) menu. To exit OSD, press “Menu” again.
Volume +/-		Adjust to increase / decrease the volume. (For certain model)
Brightness Mode		Change the brightness mode: Bright->Eco->Dynamic->Eco+. (refer to page 44)
Zoom		Zoom in on an image. Press ◀ ▶ buttons to alter zoom.

NOTE

- The interface is subject to model’s specifications.

Using the HELP button

The HELP function ensures easy setup and operation.

- Press the “?” button on the control panel to open the Help Menu.

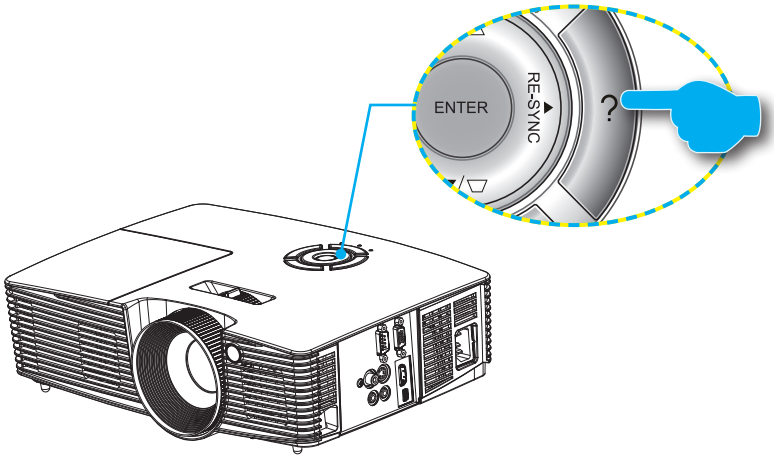

- Help menu button functions only when no input source is detected.

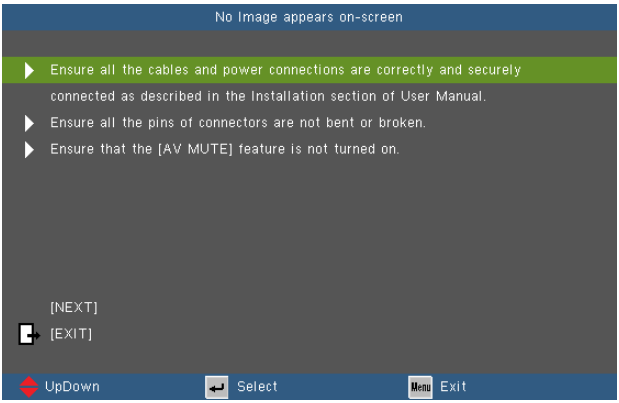

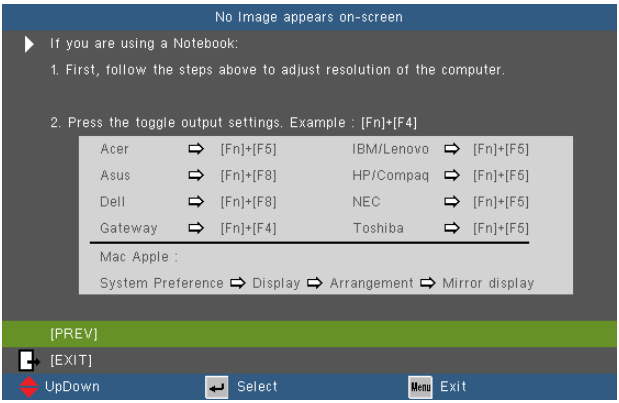

NOTE

- Please refer to the "Troubleshooting" section on pages 46-51 for more details.

- If input source is detected and help button is pressed, the following pages will appear to help diagnose any problems.

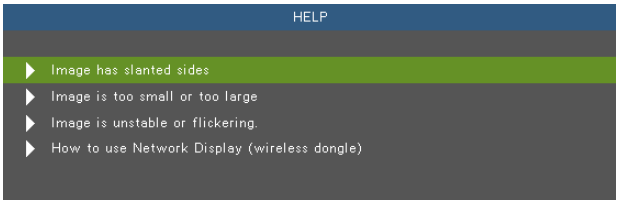

Image has slanted sides

- If possible, reposition the projector so that is centered on the screen and below the bottom of the screen.
- Press [Keystone +/-] button until the sides are vertical on the remote control.

[Keystone +/-]

[EXIT]

UpDown | Select | Menu Exit

Image is too small or too large

- Adjust the Zoom Ring on the top of the projector.
- Move the projector closer to or further from the screen.
- Press [Menu] button on the remote control or projector pannel, go to Display | Format and try the different settings.

[DISPLAY | Format]

[EXIT]

UpDown | Select | Menu Exit

There is no audio heard or the volume is too low

- Is the volume setting at the minimum?
- Turn up the volume setting.
- Is the cable connected properly to the projector?
- Check the physical connection and ensure the cable is connected properly from the source to projector.

[Volume]

[EXIT]

UpDown | Select | Menu Exit

Image is unstable or flickering.

- Use [Phase / Frequency] to correct it.
- Change the monitor color setting on your computer.

[Phase]

[Frequency]

[EXIT]

UpDown | Select | Menu Exit

On-screen Display Menus

The Projector has multilingual On-screen Display menus that allow you to make image adjustments and change a variety of settings. The projector will automatically detect the source.

How to operate

1. To open the OSD menu, press “Menu” on the Remote Control or Projector Keypad.
2 When OSD is displayed, use ◀ ▶ keys to select any item in the main menu. While making a selection on a particular page, press ▼ or “Enter” key to enter sub menu.
3. Use ▲ ▼ keys to select the desired item and adjust the settings using ◀ ▶ key.
4. Select the next item to be adjusted in the sub menu and adjust as described above.
5. Press “Enter” to confirm, and the screen will return to the main menu.
6. To exit, press “Menu” again. The OSD menu will close and the projector will automatically save the new settings.

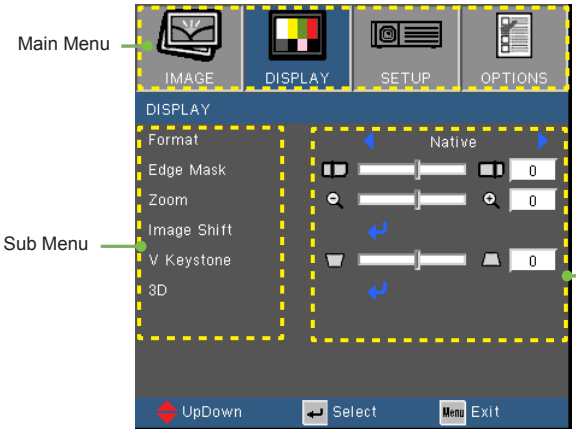

Menu Tree

Main Menu	Sub Menu			Settings
IMAGE	Display Mode			Presentation / Bright / Movie / sRGB / Blackboard / User / 3D
	Brightness			-50~50
	Contrast			-50~50
	Sharpness			1~15
	#1 Color			-50~50
	#1 Tint			-50~50
	Advanced	Gamma		Film / Video / Graphics / Standard
		BrilliantColor™		1~10
		Color Temp.		Warm / Medium / Cold
		Color settings	Red / Green / Blue / Cyan / Magenta / Yellow	Hue / Saturation / Gain
			White	Red / Green / Blue
			Reset	
			Exit	
		Color Space		AUTO / RGB / YUV
				#3 AUTO / RGB (0-255) / RGB (16-235) / YUV
		#2 Signal	Automatic	On / Off
			Phase (VGA)	0~31
			Frequency (VGA)	-5~5
			H. Position (VGA)	-5~5
			V. Position (VGA)	-5~5
			Exit	
		Exit		
	Reset			
DISPLAY	Format			#4 4:3 / 16:9 / Native / AUTO
				4:3 / 16:9 or 16:10 / Native / AUTO
	Edge Mask			0~10
	Zoom			-5~25 (80%~200%)
	Image Shift	H		-100~100
		V		-100~100
	V Keystone			-40~40
	3D	3D Mode		Off / DLP-Link
		3D->2D		3D / L / R
		#5 3D Format		AUTO / SBS / Top and Bottom / Frame Sequential
		#5 3D Sync. Invert		On / Off
		Exit		
SETUP	Language			**English / Deutsch / Français / Italiano / Español / Português / Svenska / Nederlands / Norsk/Dansk / Polski / Suomi / Русский / ελληνικά / Magyar / Čeština / فارسی / عربي /繁體中文 / 简体中文 / 日本語 /한국어 / ไทย / Türkçe / Việt / Bahasa Indonesia / Român**
	Projection			
	Menu Location			
	#6 Security	Security		On / Off
		Security Timer		Month / Day / Hour
		Change Password		
		Exit		

Main Menu	Sub Menu		Settings
SETUP	Projector ID		0~99
	#6 Audio Settings	Internal Speaker	On / Off
		Mute	On / Off
		Volume	0~10
		Audio Input	Default / AUDIO1
	Advanced	Logo	Default / Neutral
		Closed Captioning	Off / CC1 / CC2
		Exit	
OPTIONS	Input Source		VGA / Video / Video / S-Video
			#3 VGA / Video / Video / S-Video / HDMI
	Source Lock		On / Off
	High Altitude		On / Off
	Information Hide		On / Off
	Keypad Lock		On / Off
	Test Pattern		None / Grid / White Pattern
	#6 IR Function		On / Off
	Background Color		Black / Red / Blue / Green / White
	Advanced	Direct Power On	On / Off
		Auto Power Off (min)	0~180
		Quick Resume	On / Off
		Sleep Timer (min)	0~990
		Power Mode (Standby)	Active / Eco.
		Exit	
	Lamp Settings	Lamp Hours	
		Lamp Reminder	On / Off
		Brightness Mode	Bright / Eco. / Dynamic / Eco+
		Lamp Reset	Yes / No
		Dynamic Dimming	On / Off
		Exit	
	Optional Filter Settings	Optional Filter Installed	Yes / No
		Filter Usage Hours	0~9999
		Filter Reminder	Off / 300hr / 500hr / 800hr / 1000hr
		Filter Reset	Yes / No
		Exit	
	Reset		Yes / No

NOTE

- Please note that the on-screen display (OSD) menus vary according to the signal type selected and the projector model you are using.
- (#1) “Color” and “Tint” are only supported in Video mode.
- (#2) “Signal” is only supported in Analog VGA (RGB) signal.
- (#3) For HDMI Source only.
- (#4) For XGA model only.
- (#5) “3D Sync Invert” is only available when 3D is enabled and this mode 3D is for DLP link glass only.
- (#6) The function depends on model’s specifications.

IMAGE

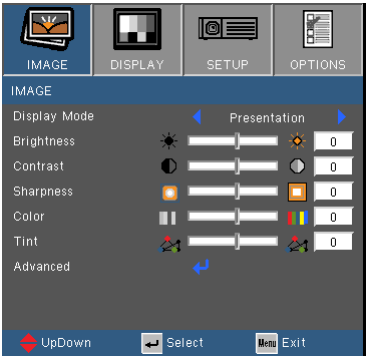

Display Mode

There are many factory presets optimized for various types of images.

- Presentation: Good color and brightness from PC input.
- Bright: Maximum brightness from PC input.
- Movie: For home theater.
- sRGB: Standardised accurate color.
- Blackboard: This mode should be selected to achieve optimum color settings when projecting onto a blackboard (green).
- User: User's settings.
- 3D: Recommend setting for 3D mode enabled. Any further adjustments by the user in 3D will be saved in this mode for further use.

Brightness

Adjust the brightness of the image.

- Press the ◀ to darken image.
- Press the ▶ to lighten the image.

Contrast

The contrast controls the degree of difference between the lightest and darkest parts of the picture.

- Press the ◀ to decrease the contrast.
- Press the ▶ to increase the contrast.

Sharpness

Adjust the sharpness of the image.

- Press the ◀ to decrease the sharpness.
- Press the ▶ to increase the sharpness.

Color

Adjust a video image from black and white to fully saturated color.

- Press the ◀ to decrease the amount of saturation in the image.
- Press the ▶ to increase the amount of saturation in the image.

Tint

Adjust the color balance of red and green.

- Press the ◀ to increase the amount of green in the image.
- Press the ▶ to increase the amount of red in the image.

NOTE

- "Color" and "Tint" functions are only supported under Video mode.

IMAGE | Advanced

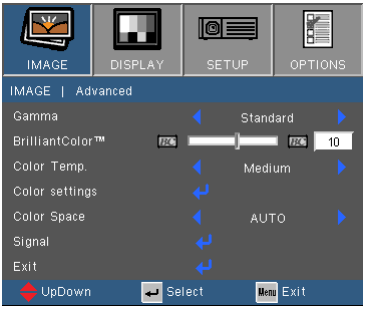

Gamma

This allows you to choose a degamma table that has been fine-tuned to bring out the best image quality for the input.

- Film: for home theater.
- Video: for video or TV source.
- Graphics: for image source.
- Standard: for PC or computer source.

BrilliantColor™

This adjustable item utilizes a new color-processing algorithm and system level enhancements to enable higher brightness while providing true, more vibrant colors in picture. The range is from “0” to “10”. If you prefer a stronger enhanced image, adjust toward the maximum setting. For a smoother, more natural image, adjust toward the minimum setting.

Color Temp

If set to cold temperature, the image looks more blue. (cold image)
If set to warm temperature, the image looks more red.
(warm image)

Color Settings

Press ↵ into the next menu as below and then use ▲ or ▼ to select item.

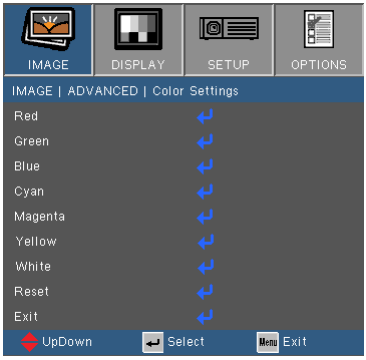

- Red/Green/Blue/Cyan/Magenta/Yellow: Use ◀ or ▶ to select Hue, Saturation and Gain Colors.

- White: Use ◀ or ▶ to select Red, Green and Blue Colors.

- Reset: Choose “Yes” to return the factory default settings for color adjustments.

NOTE

❖ (*) For models with HDMI Input.

Color Space

Select an appropriate color matrix type from AUTO, RGB, RGB(0-255)(*), RGB(16-235)(*) or YUV.

Reset

Choose “Yes” to return the display parameters on all menus to the factory default settings.

IMAGE | Advanced | Signal (RGB)

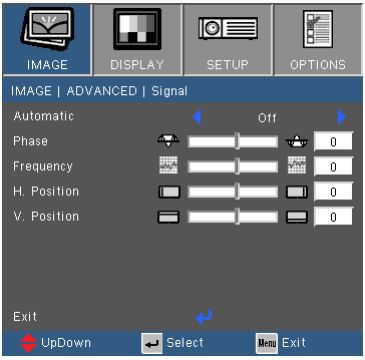

NOTE

- "Signal" is only supported in Analog VGA (RGB) signal.

Automatic

Automatically selects the signal. If you use this function, the Phase, frequency items are grayed out, and if Signal is not automatic, the phase, frequency items will appear for user to manually tune and saved in settings after that for next time projector turns off and on again.

Phase

Synchronize the signal timing of the display with the graphic card. If the image appears to be unstable or flickers, use this function to correct it.

Frequency

Change the display data frequency to match the frequency of your computer's graphic card. Use this function only if the image appears to flicker vertically.

H. Position

- Press the ◀ to move the image left.
- Press the ▶ to move the image right.

V. Position

- Press the ◀ to move the image down.
- Press the ▶ to move the image up.

DISPLAY

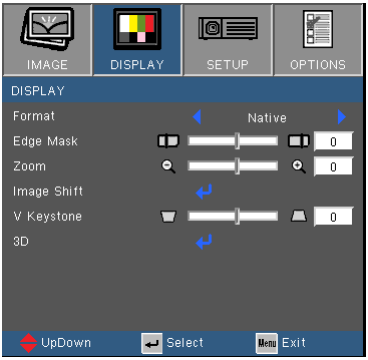

Format

Use this function to choose your desired aspect ratio.

SVGA/XGA

- 4:3: This format is for 4×3 input sources.
- 16:9: This format is for 16×9 input sources, like HDTV and DVD enhanced for Wide screen TV.
- Native: This format displays the original image without any scaling.
- AUTO: Automatically selects the appropriate display format.

Auto	Input resolution		Auto/Scale (SVGA)		Auto/Scale (XGA)	
	H	V	H	V	H	V
4:3	640	480	800	600	1024	768
	800	600	800	600	1024	768
	1024	768	800	600	1024	768
	1280	1024	800	600	1024	768
	1400	1050	800	600	1024	768
	1600	1200	800	600	1024	768
Wide Laptop	1280	720	800	450	1024	576
	1280	768	800	480	1024	614
	1280	800	800	500	1024	640
SDTV	720	576	800	450	1024	576
	720	480	800	450	1024	576
HDTV	1280	720	800	450	1024	576
	1920	1080	800	450	1024	576

Aspect ratio (source detected)	Resize image (SVGA)	Resize image (XGA)
4:3	800 x 600 center	1024 x 768 center
16:9	800 x 450 center	1024 x 576 center
Native	No resize image, 1:1 mapping and centered. This format shows the original image without scaling.	

Edge Mask

Edge mask function removes the noise in a video image. Edge mask the image to remove video encoding noise on the edge of video source.

Zoom

- Press the ◀ to reduce the size of an image.
- Press the ▶ to magnify an image on the projection screen.

NOTE

- Each I/O has different setting of "Edge Mask".
- "Edge Mask" and "Zoom" can't work at same time.

Image Shift

Press ↵ into the next menu as below and then use ▲ or ▼ to select item.

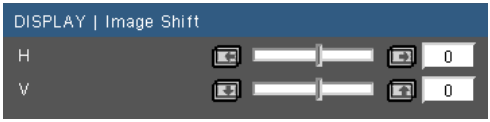

- H: Use ◀ or ▶ to shift the projected image position horizontally.
- V: Use ◀ or ▶ to Shift the projected image position vertically.

V Keystone

Press the ◀ or ▶ to adjust image distortion vertically. If the image looks trapezoidal, this option can help make the image rectangular.

DISPLAY | 3D

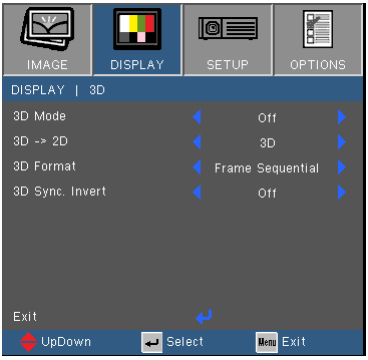

3D Mode

- Off: Select “Off” to turn 3D settings off for 3D images.
- DLP Link: Select “DLP Link” to use optimized settings for DLP Link 3D images.

3D -> 2D

- 3D: Display 3D signal.
- L (Left): Display the left frame of 3D content.
- R (Right): Display the right frame of 3D content.

3D Format

- Auto : When a 3D identification signal is detected, the 3D format is selected automatically.
- SBS: Use this mode for “Side-by-side” format 3D content.
- Top and Bottom: Use this mode for “Top and Bottom” format 3D content.
- Frame Sequential: Use this mode for “Frame Sequential” format 3D content.

3D Sync. Invert

- Press the “On” to invert left and right frame contents.
- Press the “Off” for default frame contents.

NOTE

- “3D Sync Invert” is only available when 3D is enabled and this mode 3D is for DLP link glass only.
- Compatible 3D source, 3D content and active shutter glasses are required for 3D viewing.
- See page 56 for supported 3D formats.

SETUP

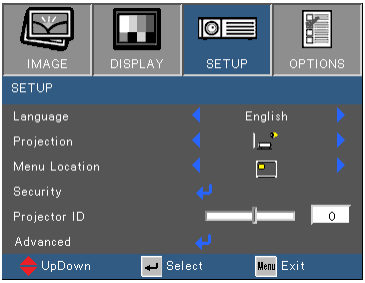

Language

Choose the multilingual OSD menu. Press ◀ or ▶ into the sub menu and then use the ▲ or ▼ key to select your preferred language. Press “Enter” to finalize the selection.

Projection

❖ Rear-Desktop and Rear-Ceiling are to be used with a translucent screen.

Front-Desktop

This is the default selection. The image is projected straight on the screen.

Rear-Desktop

When selected, the image will appear reversed.

Front-Ceiling

When selected, the image will turn upside down.

Rear-Ceiling

When selected, the image will appear reversed in upside down position.

Menu Location

Choose the menu location on the display screen.

Projector ID

ID definition can be set up by menu (range 0-99), and allow user control an individual projector by RS232. Refer to pages 57-61 for the complete list of RS232 commands.

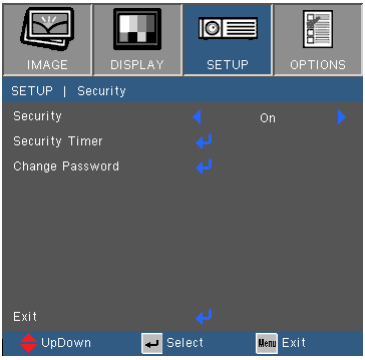

SETUP | Security

NOTE

❖ "Security" depends on model's specifications.

Security

- On: Choose "On" to use security verification when turning on the projector.
- Off: Choose "Off" to be able to switch on the projector without password verification.

NOTE

❖ Password default value is "1234" (first time).

Security Timer

Use this function to set how long (Month/Day/Hour) the projector can be used. Once this time has elapsed you will be requested to enter your password again.

Change Password

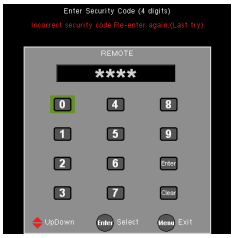

- First time:
  1. Press "Enter" to set the password.
  2. The password has to be 4 digits.
  3. Use four directional select keys on the remote to enter your new password and then press "Enter" key to confirm your password.
- Change Password:
  1. Press "Enter" to input old password.
  2. Use four directional select keys to enter current password and then press "Enter" to confirm.
  3. Enter new password (4 digits in length) using the four directional select keys on the remote, then press "Enter" to confirm.
  4. Enter new password again and press "Enter" to confirm.

- If the incorrect password is entered 3 times, the projector will automatically shut down.
- If you have forgotten your password, please contact your local office for support.

This page only for XGA model.

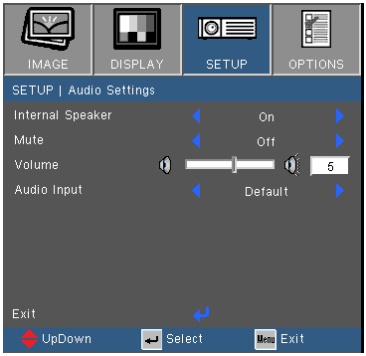

SETUP | Audio Settings

Internal Speaker

Choose the “On” or “Off” to turn on or off the internal speaker.

Mute

- Choose the “On” to turn mute on.
- Choose the “Off” to turn mute off.

Volume

- Press the ◀ to decrease the volume.
- Press the ▶ to increase the volume.

Audio Input

The default audio inputs are on the back panel of the projector. Use this option to reassign any of the Audio Inputs to the current image source.

- Default: VGA1/VGA2.
- Audio1: Video/S-Video.

SETUP | Advanced

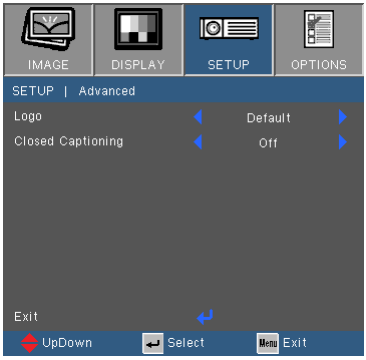

Logo

Use this function to set the desired startup screen. If changes are made they will take effect the next time the projector is powered on.

- Default: The default startup screen.
- Neutral: Logo is not displayed on startup screen.

Closed Captioning

Use this function to set the desired startup screen. If changes are made they will take effect the next time the projector is powered on.

- Off: select “Off” to turn off the closed captioning feature.
- CC1:CC1 language: American English.
- CC2:CC2 language (depending on the TV channel of the user):Spanish, French, Portuguese, German, Danish.

OPTIONS

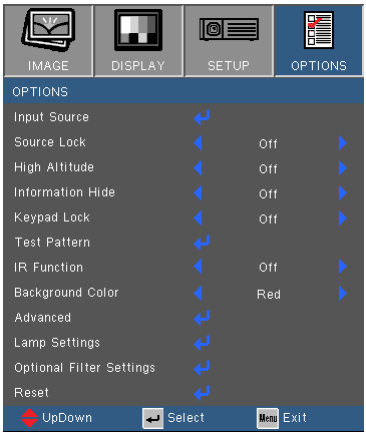

Input Source

Use this option to enable / disable input sources. Press ↵ to enter the sub menu and select which sources you require. Press “Enter” to finalize the selection. The projector will not search for inputs that are not selected.

Source Lock

- On: The projector will only search current input connection.
- Off: The projector will search for other signals if the current input signal is lost.

High Altitude

When “On” is selected, the fans will spin faster. This feature is useful in high altitude areas where the air is thin.

Information Hide

- On: Choose “On” to hide the info message.
- Off: Choose “Off” to show the “searching” message.

Keypad Lock

When the keypad lock function is “On”, the control panel will be locked however, the projector can be operated by the remote control. By selecting “Off”, you will be able to reuse the control panel.

NOTE

❖ To turn off the keypad lock, press and hold “Enter” key on top of the projector for 5 seconds.

Test Pattern

Display a test pattern. There are Grid, White pattern and None.

IR Function(*)

- On: Choose “On”, the projector can be operated by the remote control. When you change the setting from “Off” to “On”, it will display a warning message:

- Off: Choose “Off”, you will only be able to use the control panel keys. When you change the setting from “On” to “Off”, it will display a warning message:

NOTE

- (*) The function depends on model’s specifications.

Background Color

Use this feature to display a “Black”, “Red”, “Blue”, “Green” or “White”, screen when no signal is available.

Reset

Choose “Yes” to return the display parameters on all menus to the factory default settings.

OPTIONS | Advanced

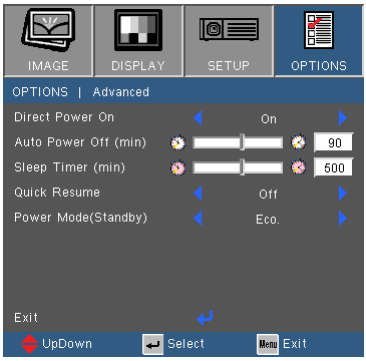

Direct Power On

Choose “On” to activate Direct Power mode. The projector will automatically power on when AC power is supplied, without pressing the “⏻” key on the projector control panel or on the remote control.

Auto Power Off (min)

Sets the countdown timer interval. The countdown timer will start, when there is no signal being sent to the projector. The projector will automatically power off when the countdown has finished (in minutes).

Sleep Timer (min)

Sets the countdown timer interval. The countdown timer will start, with or without a signal being sent to the projector. The projector will automatically power off when the countdown has finished (in minutes).

Quick Resume

- On: If the projector is accidentally turned off, this feature allows the projector to be instantly powered on again, if selected within a period of 100 seconds.
- Off: The fan will start cooling the system immediately when user turns off the projector.

Power Mode (Standby)

- Eco.: Choose “Eco.” to save power dissipation further < 0.5W.
- Active: Choose “Active” to return to normal standby and the VGA out port will be enabled.

NOTE

- When Power mode (Standby) is set to Eco (<0.5W), the VGA output and Audio pass-through will be deactivated when the projector is in standby.
- The value of sleep timer will be reset to zero after the projector power off.

OPTIONS | Lamp Settings

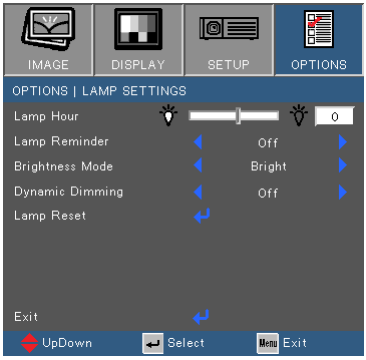

Lamp Hours

Display the projection time.

Lamp Reminder

Choose this function to show or to hide the warning message when the changing lamp message is displayed.
The message will appear 30 hours before suggested replacement of lamp.

NOTE

❖ When ambient temperature is over 40°C in operating, the projector will switch to Eco automatically.

Brightness Mode

- BRIGHT: Choose “BRIGHT” to increase the brightness.
- Eco.: Choose “Eco.” to dim the projector lamp which will lower power consumption and extend the lamp life.
- Dynamic: Choose “Dynamic” to dim the lamp power which will be based on brightness level of the content and adjust lamp power consumption between 100% and 30% dynamically. The lamp life will be extended.
- Eco+: Choose "Eco+" to utilize the latest Eco+ technology which brings together superb performance, improved lamp life and energy saving features.

Dynamic Dimming

- On: When select Dynamic “On”, the options in lamp modes will be “Dynamic”.
- Off: When select Dynamic “Off”, the options in lamp modes will be “Bright” and “ECO”.

Lamp Reset

Reset the lamp hour counter after replacing the lamp.

OPTIONS | Optional Filter Settings

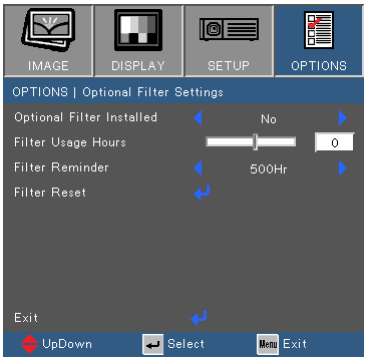

Optional Filter Installed

Select “Yes” to display warning message after 500 hours of use. Select “No” to turn off warning message.

The default setting for Filter is “No”. After assembling filter, please turn on the projector then press “Menu”, go to “OPTIONS -> Optional Filter Settings -> Optional Filter Installed” and select “Yes”.

Filter Usage Hours

Display the filter time.

Filter Reminder

Choose this function to show or hide the warning massage when the changing filter message is displayed. (Factory default setting: 500 hours)

Filter Reset

Reset the dust filter counter after replacing or cleaning the dust filter.

Troubleshooting

If you experience a problem with your projector, please refer to the following information. If a problem persists, please contact your local reseller or service center.

? No image appears on-screen

- Ensure all the cables and power connections are correctly and securely connected as described in the “Installation” section.
- Ensure all the pins of connectors are not bent or broken.
- Check if the projection lamp has been securely installed. Please refer to the “Replacing the lamp” section.
- Ensure that the “AV Mute” feature is not turned on.

? Partial, scrolling or incorrectly displayed image

- Press “Re-SYNC” on the remote control or control panel.
- If you are using a PC:

For Windows 95, 98, 2000, XP, Windows 7:

1. Open the “My Computer” icon, the “Control Panel” folder, and then double click on the “Display” icon.
2. Select the “Settings” tab.
3. Verify that your display resolution setting is lower than or equal to UXGA (1600 × 1200).
4. Click on the “Advanced Properties” button.

If the projector is still not projecting the whole image, you will also need to change the monitor display you are using. Refer to the following steps.

5. Verify the resolution setting is lower than or equal to UXGA (1600 × 1200).
6. Select the “Change” button under the “Monitor” tab.

7. Click on “Show all devices”. Next, select “Standard monitor types” under the SP box; choose the resolution mode you need under the “Models” box.
8. Verify that the resolution setting of the monitor display is lower than or equal to UXGA (1600 × 1200).

- If you are using a Notebook:
  1. First, follow the steps above to adjust resolution of the computer.
  2. Press the appropriate keys listed below for your notebook manufacturer to send signal out from notebook to projector. Example: [Fn]+[F4]

Acer ⇨	[Fn]+[F5]	IBM/Lenovo ⇨	[Fn]+[F7]
Asus ⇨	[Fn]+[F8]	HP/Compaq ⇨	[Fn]+[F4]
Dell ⇨	[Fn]+[F8]	NEC ⇨	[Fn]+[F3]
Gateway ⇨	[Fn]+[F4]	Toshiba ⇨	[Fn]+[F5]

Mac Apple:
System Preference ⇨ Display ⇨ Arrangement ⇨ Mirror display

- If you experience difficulty changing resolutions or your monitor freezes, restart all equipment including the projector.

? The screen of the Notebook or PowerBook computer is not displaying your presentation

- <u>If you are using a Notebook PC</u>
  Some Notebook PCs may deactivate their own screens when a second display device is in use. Each has a different way to be reactivated. Refer to your computer’s manual for detailed information.

? Image is unstable or flickering

- Use “Phase” to correct it. See page 31 for more information.
- Change the monitor color setting on your computer.

? Image has vertical flickering bar

- Use “Frequency” to make an adjustment. See page 31 for more information.
- Check and re-configure the display mode of your graphic card to make it compatible with the projector.

Image is out of focus

- Adjust the Focus Ring on the projector lens.
- Make sure the projection screen is between the required distance. See pages 16-17.

The image is stretched when displaying 16:9 DVD title

- When you play anamorphic DVD or 16:9 DVD, the projector will show the best image when the projector display mode is set to 16:9 in the OSD.
- If you play 4:3 format DVD titles, please change the format to 4:3 in the projector OSD.
- If the image is still stretched, you will also need to adjust the aspect ratio by referring to the following:
- Please setup the display format as 16:9 (wide) aspect ratio type on your DVD player.

Image is too small or too large

- Adjust the Zoom Ring on the top of the projector.
- Move the projector closer to or further from the screen.
- Press “Menu” button on the remote control, go to “Display → Format” and try the different settings.

NOTE

- Use of Keystone is not recommended.

Image has slanted sides

- If possible, reposition the projector so that it is horizontally centered on the screen and below the bottom of the screen.
- Press “Keystone +/-” button on the remote control until the sides are vertical.
- Use “Display → V Keystone” from the OSD to make an adjustment.

Image is reversed

- Select “SETUP → Projection” from the OSD and adjust the projection direction.

? The projector stops responding to all controls

- If possible, turn off the projector, then unplug the power cord and wait at least 60 seconds before reconnecting power.
- Check that “Keypad Lock” is not activated by trying to control the projector with the remote control.

? Blurry double image

- Press “3D Format” button and switch to “Off” to avoid normal 2D image is blurry double image.

? Two images, side-by-side format

- Press “3D Format” button and switch to “SBS” for input signal is HDMI 1.3 2D 1080i side-by-side.

? Image does not display in 3D

- Check if the battery of 3D glasses is drained.
- Check if the 3D glasses is turned on.
- When the input signal is HDMI 1.3 2D (1080i side-by-side half), press “3D Format” button and switch to “SBS”.

? Lamp burns out or makes a popping sound

- When the lamp reaches its end of life, it will burn out and may make a loud popping sound. If this happens, the projector will not turn on until the lamp module has been replaced. To replace the lamp, follow the procedures in the “Replacing the Lamp” section on pages 52-53.

LED lighting message

Message	ON/STANDBY LED	Temp-LED	Lamp-LED
	(Blue/Red)	(Red)	(Red)
Standby State (Input power cord)	Red	○	○
Power on (Warming)	Flashing Blue	○	○
Lamp lighting	Blue	○	○
Power off (Cooling)	Flashing Blue	○	○
Error (Over Temp.)	Flashing Red	☼	○
Error (Fan fail)	Flashing Red	Flashing	○
Error (Lamp fail)	Flashing Red	○	☼

Note

Steady light ⇨ ☼

No light ⇨ ○

On Screen Messages

- Temperature warning:

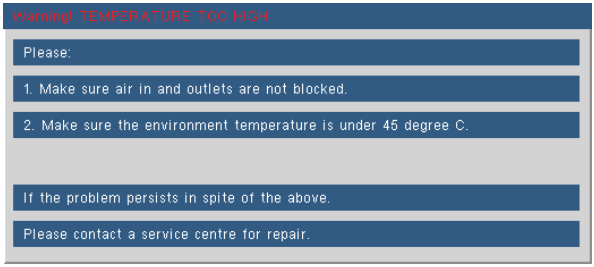

- Fan failed:

- Lamp warning:

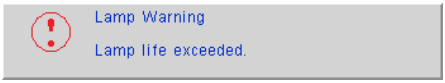

- Out of display range:

If the remote control does not work

- Check the operating angle of the remote control is within ±20° both horizontally and vertically of one of the IR receivers on the projector.
- Make sure there are not any obstructions between the remote control and the projector. Move to within 7 m (±0°) of the projector.
- Make sure the batteries are inserted correctly.
- Replace batteries if they are exhausted.

Replacing the Lamp

The projector automatically detects the lamp life. When the lamp life is nearing the end of use, you will receive a warning message.

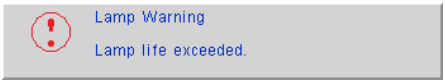

When you see this message, please contact your local reseller or service center to change the lamp as soon as possible. Make sure the projector has been cooled down for at least 30 minutes before changing the lamp.

⚠ Warning: If ceiling mounted, please use caution when opening the lamp access panel. It is recommended to wear safety glasses if changing the bulb when ceiling mounted. “Caution must be used to prevent any loose parts from falling out of projector.”

⚠ Warning: Lamp compartment may be hot! Allow it to cool down before changing the lamp!

⚠ Warning: To reduce the risk of personal injury, do not drop the lamp module or touch the lamp bulb. The bulb may shatter and cause injury if it is dropped.

- The screws on the lamp cover and the lamp cannot be removed.
- The projector cannot be turned on if the lamp cover has not been placed back on the projector.
- Do not touch the glass area of the lamp. Hand oil can cause the lamp to shatter. Use a dry cloth to clean the lamp module if it was accidentally touched.

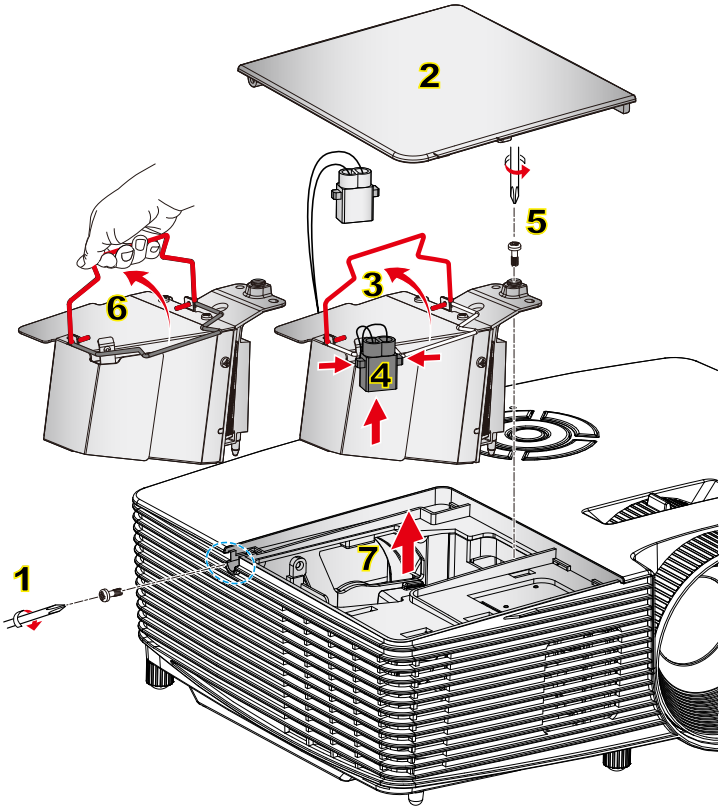

Lamp Replacement Procedure:

1. Switch off the power to the projector by pressing the "⏻" button.
2. Allow the projector to cool down for at least 30 minutes.
3. Disconnect the power cord.
4. Unscrew the one screw on the cover. 1
5. Lift up and remove the cover. 2
6. Lift up the lamp handle. 3
7. Press on the both sides then lift up and remove the lamp cord. 4
8. Unscrew the one screw on the lamp module. 5
9. Lift up the lamp handle 6 and remove the lamp module slowly and carefully. 7

To replace the lamp module, reverse the previous steps.

10. Turn on the projector and reset the lamp timer.

Lamp Reset: (i) Press "Menu" → (ii) Select "OPTIONS" → (iii) Select "Lamp Settings" → (iv) Select "Lamp Reset" → (v) Select "Yes".

Installing and Cleaning the Dust Filter

Note

- Dust filters are only required/supplied in selected regions with excessive dust.

Installing the Dust Filter

Procedure:

1. Install two filters.
2. Turn on the projector then press “Menu”, go to “OPTIONS -> Optional Filter Settings -> Optional Filter Installed” and select “Yes”.

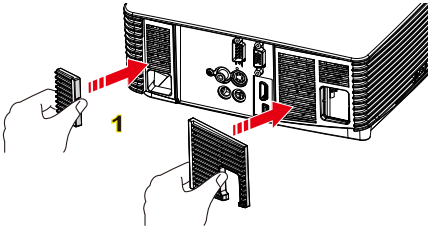

Cleaning the Dust Filter

We recommends cleaning the dust filter every three months; clean it more often if the projector is used in a dusty environment.

Procedure:

1. Switch off the power to the projector by pressing the “⏻” button.
2. Disconnect the power cord.
3. Remove the dust filter slowly and carefully.
4. Clean or replace the dust filter.
5. To install the dust filter, reverse the previous steps.
6. Reset the dust filter counter after replacing or cleaning the dust filter. Press “Menu”, go to “OPTIONS -> Optional Filter Settings -> Filter Reset”

   Turn on the projector, then press “Menu”, “OPTIONS -> Optional Filter Settings -> Optional Filter Installed” and select “No” when you pull out the dust filter and would not install it again.

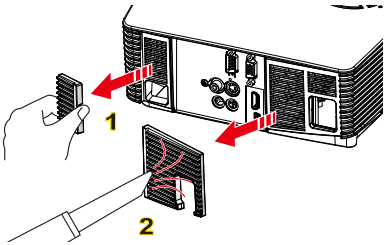

Compatibility Modes

Computer/Video/HDMI/Mac Compatibility

Signal	Resolution	Refresh Rate (Hz)	Video	Analog	HDMI	Mac
NTSC	720 x 480	60	O	-	-	-
PAL/SECAM	720 x 576	50	O	-	-	-
VGA	640 x 480	60	-	O	O	O
	640 x 480	67	-	O	-	-
	640 x 480	72.8	-	O	-	O
	640 x 480	85	-	O	-	O
SVGA	800 x 600	56.3	-	O	-	-
	800 x 600	60.3 (*2)	-	O	O	O
	800 x 600	72.2	-	O	O	O
	800 x 600	85.1	-	O	O	O
	800 x 600	120 (*2)	-	O	O	-
XGA	1024 x 768	48	-	O	O	
	1024 x 768	50	-	O (*4)	O (*4)	
	1024 x 768	60 (*2)	-	O	O	O
	1024 x 768	70.1	-	O	O	O
	1024 x 768	75	-	O	O	O
	1024 x 768	85	-	O	O	O
	1024 x 768	120 (*2)	-	O	O	-
WSVGA	1024 x 600	60	-	-	O	-
HDTV (720p)	1280 x 720	50	O	O	O	-
	1280 x 720	60 (*2)	O	O	O	O
	1280 x 720	120 (*2)	-	O	O	-
SXGA	1280 x 1024	60	-	O	O	O
	1280 x 1024	75	-	O	O	O
	1280 x 1024	85	-	O	O	-
SXGA+	1400 x 1050	60	-	O	O	-
UXGA	1600 x1200	60	-	O	O	-
HDTV (1080p)	1920 x 1080	24	O	O	O	-
	1920 x 1080	30	-	-	O	-
	1920 x 1080	50	O	O	O	-
	1920 x 1080	60	O	O	O	O
HDTV (1080i)	1920 x 1080	50	O	-	O	-
	1920 x 1080	60	O	-	O	-

Note

- For widescreen resolution, the compatibility support is dependent on Notebook/PC models.
- Please note that using resolutions other than native 800 x 600 (SVGA model), 1024 x 768 (XGA model), may result in some loss of image clarity.
- (*1) 1920 x1200 @60Hz only support RB (reduced blanking).
- (*2) 3D timing for True 3D projector.
- (*3) is not supported HDMI input signal for Mac.
- (*4) Proscene and Data Projector > 4,000 Lumens only, Native resolution must support.
- 120Hz input signals may be dependent on graphics cards support.

Signal	Resolution	Refresh Rate (Hz)	Video	Analog	HDMI	Mac
WUXGA (*1)	1920 x 1200	50	-	O (*4)	O (*4)	-
	1920 x 1200	60	-	O	O	O
SDTV (576i)	720 x 576	50	O	-	O	-
SDTV (576p)	720 x 576	50	O	-	O	-
SDTV (480i)	720 x 480	60	O	-	O	-
SDTV (480p)	720 x 480	60	O	-	O	-

3D Input Video Compatibility

		Input Timing		
Input Resolution	HDMI 1.4a 3D Input	1280 x 720p @ 50Hz	Top-and-Bottom	
		1280 x 720p @ 60Hz	Top-and-Bottom	
		1280 x 720p @ 50Hz	Frame packing	
		1280 x 720p @ 60Hz	Frame packing	
		1920 x 1080i @ 50 Hz	Side-by-Side (Half)	
		1920 x 1080i @ 60 Hz	Side-by-Side (Half)	
		1920 x 1080p @ 24 Hz	Top-and-Bottom	
		1920 x 1080p @ 24 Hz	Frame packing	
	HDMI 1.3 3D Content	1920 x 1080i @ 50Hz	Side-by-Side (Half)	While 3D Format is “SBS”
		1920 x 1080i @ 60Hz		
		1280 x 720p @ 50Hz		
		1280 x 720p @ 60Hz		
		1920 x 1080i @ 50Hz	Top-and-Bottom	While 3D Format is “Top and Bottom”
		1920 x 1080i @ 60Hz		
		1280 x 720p @ 50Hz		
		1280 x 720p @ 60Hz		
		480i	HQFS	While 3D Format is “Frame sequential”

NOTE

❖ HDMI 3D only for XGA model

RS232 Commands and Protocol Function List

RS232 Pin Assignments

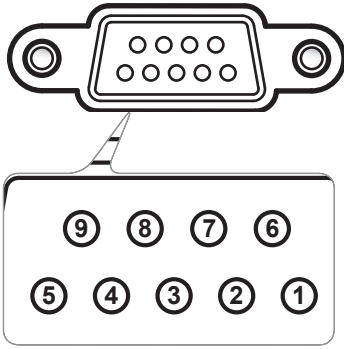

Pin no.	Spec. (from projector side)
1	N/A
2	RXD
3	TXD
4	N/A
5	GND
6	N/A
7	N/A
8	N/A
9	N/A

RS232 Protocol Function List

1. There is a <CR> after all ASCII commands.
2. 0D is the HEX code for <CR> in ASCII code.

Baud Rate : 9600
Data Bits: 8
Parity: None
Stop Bits: 1
Flow Control : None
UART16550 FIFO: Disable
Projector Return (Pass): P
Projector Return (Fail): F

XX=00-99, projector's ID,
XX=00 is for all projectors

SEND to projector

232 ASCII Code	HEX Code	Function		Description
~XX00 1	7E 30 30 30 30 20 31 0D	Power ON		
~XX00 0	7E 30 30 30 30 20 30 0D	Power OFF		(0/2 for backward compatible)
~XX00 1 ~nnnn	7E 30 30 30 30 20 31 20 a 0D	Power ON with Password		~nnnn = ~0000 (a=7E 30 30 30 30) ~9999 (a=7E 39 39 39 39)
~XX01 1	7E 30 30 30 31 20 31 0D	Resync		
~XX02 1	7E 30 30 30 32 20 31 0D	AV Mute	On	
~XX02 0	7E 30 30 30 32 20 30 0D		Off (0/2 for backward compatible)	
~XX03 1	7E 30 30 30 33 20 31 0D	Mute	On	
~XX03 0	7E 30 30 30 33 20 30 0D		Off (0/2 for backward compatible)	
~XX04 1	7E 30 30 30 34 20 31 0D	Freeze		
~XX04 0	7E 30 30 30 34 20 30 0D	Unfreeze	(0/2 for backward compatible)	
~XX05 1	7E 30 30 30 35 20 31 0D	Zoom Plus		
~XX06 1	7E 30 30 30 36 20 31 0D	Zoom Minus		
~XX12 1	7E 30 30 31 32 20 31 0D	Direct Source Commands	HDMI	
~XX12 5	7E 30 30 31 32 20 35 0D		VGA1	
~XX12 6	7E 30 30 31 32 20 36 0D		VGA 2	
~XX12 8	7E 30 30 31 32 20 38 0D		VGA1 Component	
~XX12 9	7E 30 30 31 32 20 39 0D		S-Video	
~XX12 10	7E 30 30 31 32 20 31 30 0D		Video	
~XX12 13	7E 30 30 31 32 20 31 33 0D		VGA 2 Component	
~XX20 1	7E 30 30 32 30 20 31 0D	Display Mode	Presentation	
~XX20 2	7E 30 30 32 30 20 32 0D		Bright	
~XX20 3	7E 30 30 32 30 20 33 0D		Movie	
~XX20 4	7E 30 30 32 30 20 34 0D		sRGB	
~XX20 5	7E 30 30 32 30 20 35 0D		User	
~XX20 7	7E 30 30 32 30 20 37 0D		Blackboard	
~XX20 9	7E 30 30 32 30 20 39 0D		3D	
~XX21 n	7E 30 30 32 31 20 a 0D	Brightness		n = -50 (a=2D 35 30) ~ 50 (a=35 30)
~XX22 n	7E 30 30 32 32 20 a 0D	Contrast		n = -50 (a=2D 35 30) ~ 50 (a=35 30)
~XX23 n	7E 30 30 32 33 20 a 0D	Sharpness		n = 1 (a=31) ~ 15 (a=31 35)
~XX24 n	7E 30 30 32 34 20 a 0D	Color Settings/White	Red	n = -50 (a=2D 35 30) ~ 50 (a=35 30)
~XX25 n	7E 30 30 32 35 20 a 0D		Green	n = -50 (a=2D 35 30) ~ 50 (a=35 30)
~XX26 n	7E 30 30 32 36 20 a 0D		Blue	n = -50 (a=2D 35 30) ~ 50 (a=35 30)
~XX33 1	7E 30 30 33 33 20 31 0D		Reset	
~XX34 n	7E 30 30 33 34 20 a 0D	BrilliantColor™		n = 1 (a=30) ~ 10 (a=31 30)
~XX35 1	7E 30 30 33 35 20 31 0D	Gamma	Film	
~XX35 2	7E 30 30 33 35 20 32 0D		Video	
~XX35 3	7E 30 30 33 35 20 33 0D		Graphics	
~XX35 4	7E 30 30 33 35 20 34 0D		Standard	
~XX36 1	7E 30 30 33 36 20 31 0D	Color Temp.	Warm	
~XX36 2	7E 30 30 33 36 20 32 0D		Medium	
~XX36 3	7E 30 30 33 36 20 33 0D		Cold	
~XX37 1	7E 30 30 33 37 20 31 0D	Color Space	Auto	
~XX37 2	7E 30 30 33 37 20 32 0D		RGB\RGB(0-255)	
~XX37 3	7E 30 30 33 37 20 33 0D		YUV	
~XX37 4	7E 30 30 33 37 20 34 0D		RGB(16-235)	
~XX73 n	7E 30 30 37 33 20 a 0D	Signal	Frequency	n = -5 (a=2D 35) ~ 5 (a=35) By signal
~XX91 n	7E 30 30 39 31 20 a 0D		Automatic	n = 0 disable; n = 1 enable
~XX74 n	7E 30 30 37 34 20 a 0D		Phase	n = 0 (a=30) ~ 31 (a=33 31) By signal
~XX75 n	7E 30 30 37 35 20 a 0D		H. Position	n = -5 (a=2D 35) ~ 5 (a=35) By timing
~XX76 n	7E 30 30 37 36 20 a 0D		V. Position	n = -5 (a=2D 35) ~ 5 (a=35) By timing

~XX45 n	7E 30 30 34 34 20 a 0D	Color (Saturation)		n = -50 (a=2D 35 30) ~ 50 (a=35 30)
~XX44 n	7E 30 30 34 35 20 a 0D	Tint		n = -50 (a=2D 35 30) ~ 50 (a=35 30)
~XX60 1	7E 30 30 36 30 20 31 0D	Format	4:3	
~XX60 2	7E 30 30 36 30 20 32 0D		16:9	
~XX60 6	7E 30 30 36 30 20 36 0D		Native	
~XX60 7	7E 30 30 36 30 20 37 0D		Auto	
~XX61 n	7E 30 30 36 31 20 a 0D	Edge mask		n = 0 (a=30) ~ 10 (a=31 30)
~XX62 n	7E 30 30 36 32 20 a 0D	Zoom		n = -5 (a=2D 35) ~ 25 (a=32 35)
~XX63 n	7E 30 30 36 33 20 a 0D	H Image Shift		n = -100 (a=2D 31 30 30) ~ 100 (a=31 30 30)
~XX64 n	7E 30 30 36 34 20 a 0D	V Image Shift		n = -100 (a=2D 31 30 30) ~ 100 (a=31 30 30)
~XX66 n	7E 30 30 36 36 20 a 0D	V Keystone		n = -40 (a=2D 34 30) ~ 40 (a=34 30)
~XX230 0	7E 30 30 32 33 30 20 30 0D	3D Mode	OFF	
~XX230 1	7E 30 30 32 33 30 20 31 0D	3D Mode	DLP-Link	
~XX400 0	7E 30 30 34 30 30 20 30 0D	3D→2D	3D	
~XX400 1	7E 30 30 34 30 30 20 31 0D		L	
~XX400 2	7E 30 30 34 30 30 20 32 0D		R	
~XX405 0	7E 30 30 34 30 35 20 30 0D	3D Format	Auto	
~XX405 1	7E 30 30 34 30 35 20 31 0D		SBS	
~XX405 2	7E 30 30 34 30 35 20 32 0D		Top and Bottom	
~XX405 3	7E 30 30 34 30 35 20 33 0D		Frame sequential	
~XX231 0	7E 30 30 32 33 31 20 30 0D	3D Sync Invert	On	
~XX231 1	7E 30 30 32 33 31 20 31 0D	3D Sync Invert	Off	
~XX70 1	7E 30 30 37 30 20 31 0D	Language	English	
~XX70 2	7E 30 30 37 30 20 32 0D		German	
~XX70 3	7E 30 30 37 30 20 33 0D		French	
~XX70 4	7E 30 30 37 30 20 34 0D		Italian	
~XX70 5	7E 30 30 37 30 20 35 0D		Spanish	
~XX70 6	7E 30 30 37 30 20 36 0D		Portuguese	
~XX70 7	7E 30 30 37 30 20 37 0D		Polish	
~XX70 8	7E 30 30 37 30 20 38 0D		Dutch	
~XX70 9	7E 30 30 37 30 20 39 0D		Swedish	
~XX70 10	7E 30 30 37 30 20 31 30 0D		Norwegian/Danish	
~XX70 11	7E 30 30 37 30 20 31 31 0D		Finnish	
~XX70 12	7E 30 30 37 30 20 31 32 0D		Greek	
~XX70 13	7E 30 30 37 30 20 31 33 0D		Traditional Chinese	
~XX70 14	7E 30 30 37 30 20 31 34 0D		Simplified Chinese	
~XX70 15	7E 30 30 37 30 20 31 35 0D		Japanese	
~XX70 16	7E 30 30 37 30 20 31 36 0D		Korean	
~XX70 17	7E 30 30 37 30 20 31 37 0D		Russian	
~XX70 18	7E 30 30 37 30 20 31 38 0D		Hungarian	
~XX70 19	7E 30 30 37 30 20 31 39 0D		Czechoslovak	
~XX70 20	7E 30 30 37 30 20 32 30 0D		Arabic	
~XX70 21	7E 30 30 37 30 20 32 31 0D		Thai	
~XX70 22	7E 30 30 37 30 20 32 32 0D		Turkish	
~XX70 23	7E 30 30 37 30 20 32 33 0D		Farsi	
~XX70 25	7E 30 30 37 30 20 32 33 0D		Vietnamese	
~XX70 26	7E 30 30 37 30 20 32 33 0D		Indonesian	
~XX70 27	7E 30 30 37 30 20 32 33 0D		Romanian	
~XX71 1	7E 30 30 37 31 20 31 0D	Projection	Front-Desktop	
~XX71 2	7E 30 30 37 31 20 32 0D		Rear-Desktop	
~XX71 3	7E 30 30 37 31 20 33 0D		Front-Ceiling	
~XX71 4	7E 30 30 37 31 20 34 0D		Rear-Ceiling	
~XX72 1	7E 30 30 37 32 20 31 0D	Menu Location	Top Left	
~XX72 2	7E 30 30 37 32 20 32 0D		Top Right	
~XX72 3	7E 30 30 37 32 20 33 0D		Centre	
~XX72 4	7E 30 30 37 32 20 34 0D		Bottom Left	
~XX72 5	7E 30 30 37 32 20 35 0D		Bottom Right	
~XX77 n	7E 30 30 37 37 20 aabbcc 0D	Security	Security Timer	Month/Day/Hour n = mm/dd/hh mm= 00 (aa=30 30) ~ 12 (aa=31 32) dd = 00 (bb=30 30) ~ 30 (bb=33 30) hh= 00 (cc=30 30) ~ 24 (cc=32 34)
~XX78 1	7E 30 30 37 38 20 31 0D		Security Settings	Enable
~XX78 0 ~nnnn	7E 30 30 37 38 20 32 20 a 0D			Disable(0/2 for backward compatible) ~nnnn = ~0000 (a=7E 30 30 30 30) ~9999 (a=7E 39 39 39 39)
~XX79 n	7E 30 30 37 39 20 a 0D	Projector ID		n = 00 (a=30 30) ~ 99 (a=39 39)
~XX80 1	7E 30 30 38 30 20 31 0D	Mute	On	
~XX80 0	7E 30 30 38 30 20 30 0D		Off (0/2 for backward compatible)	
~XX310 0	7E 30 33 31 30 20 30 0D	Internal Speaker	Off	
~XX310 1	7E 30 33 31 30 20 31 0D		On	
~XX81 n	7E 30 30 38 31 20 a 0D	Volume (Audio)		n = 0 (a=30) ~ 10 (a=31 30)
~XX82 1	7E 30 30 38 32 20 31 0D	Logo	Default	
~XX82 3	7E 30 30 38 32 20 33 0D		Neutral	

~XX88 0	7E 30 30 38 38 20 30 0D	Closed Captioning	Off	
~XX88 1	7E 30 30 38 38 20 31 0D		cc1	
~XX88 2	7E 30 30 38 38 20 32 0D		cc2	
~XX89 0	7E 30 30 38 39 20 30 0D	Audio Input	Default	
~XX89 1	7E 30 30 38 39 20 31 0D		Audio1	
~XX100 1	7E 30 30 31 30 30 20 31 0D	Source Lock	On	
~XX100 0	7E 30 30 31 30 30 20 30 0D		Off (0/2 for backward compatible)	
~XX101 1	7E 30 30 31 30 31 20 31 0D	High Altitude	On	
~XX101 0	7E 30 30 31 30 31 20 30 0D		Off (0/2 for backward compatible)	
~XX102 1	7E 30 30 31 30 32 20 31 0D	Information Hide	On	
~XX102 0	7E 30 30 31 30 32 20 30 0D		Off (0/2 for backward compatible)	
~XX103 1	7E 30 30 31 30 33 20 31 0D	Keypad Lock	On	
~XX103 0	7E 30 30 31 30 33 20 30 0D		Off (0/2 for backward compatible)	
~XX195 0	7E 30 30 31 39 35 20 30 0D	Test Pattern	None	
~XX195 1	7E 30 30 31 39 35 20 31 0D		Grid	
~XX195 2	7E 30 30 31 39 35 20 32 0D		White Pattern	
~XX11 0	7E 30 30 31 31 20 30 0D	IR Function	Off	
~XX11 1	7E 30 30 31 31 20 31 0D		On	
~XX104 1	7E 30 30 31 30 34 20 31 0D	Background Color	Blue	
~XX104 2	7E 30 30 31 30 34 20 32 0D		Black	
~XX104 3	7E 30 30 31 30 34 20 33 0D		Red	
~XX104 4	7E 30 30 31 30 34 20 34 0D		Green	
~XX104 5	7E 30 30 31 30 34 20 35 0D		White	
~XX105 1	7E 30 30 31 30 35 20 31 0D	Advanced	Direct Power On	On
~XX105 0	7E 30 30 31 30 35 20 30 0D			Off (0/2 for backward compatible)
~XX106 n	7E 30 30 31 30 36 20 a 0D		Auto Power Off (min)	n = 0 (a=30) ~ 180 (a=31 38 30)
~XX107 n	7E 30 30 31 30 37 20 a 0D		Sleep Timer (min)	n = 0 (a=30) ~ 990 (a=39 39 39)
~XX115 1	7E 30 30 31 31 35 20 31 0D		Quick Resume	On
~XX115 0	7E 30 30 31 31 35 20 30 0D			Off (0/2 for backward compatible)
~XX114 1	7E 30 30 31 31 34 20 31 0D		Power Mode(Standby)	Eco.(<=0.5W)
~XX114 0	7E 30 30 31 31 34 20 30 0D			Active (0/2 for backward compatible)
~XX109 1	7E 30 30 31 30 39 20 31 0D		Lamp Reminder	On
~XX109 0	7E 30 30 31 30 39 20 30 0D			Off (0/2 for backward compatible)
~XX110 1	7E 30 30 31 31 30 20 31 0D		Brightness Mode	Bright
~XX110 2	7E 30 30 31 31 30 20 32 0D			Eco
~XX110 4	7E 30 30 31 31 30 20 34 0D			Dynamic
~XX110 3	7E 30 30 31 31 30 20 33 0D			Eco+
~XX111 1	7E 30 30 31 31 31 20 31 0D		Lamp Reset	Yes
~XX111 0	7E 30 30 31 31 31 20 30 0D			No (0/2 for backward compatible)
~XX322 0	7E 30 30 33 32 32 20 30 0D	Filter Reminder		Off
~XX322 1	7E 30 30 33 32 32 20 31 0D			300 hr
~XX322 2	7E 30 30 33 32 32 20 32 0D			500 hr
~XX322 3	7E 30 30 33 32 32 20 33 0D			800 hr
~XX322 4	7E 30 30 33 32 32 20 34 0D			1000 hr
~XX323 1	7E 30 30 33 32 33 20 31 0D	Filter Reset		Yes
~XX323 0	7E 30 30 33 32 33 20 30 0D			No
~XX112 1	7E 30 30 31 31 32 20 31 0D	Reset		Yes
~XX99 1	7E 30 30 39 39 20 31 0D	RS232 Alert Reset	Reset System Alert	
~XX210 n	7E 30 30 32 30 30 20 n 0D	Display message on the OSD		n: 1-30 characters

SEND to emulate Remote

~XX140 10	7E 30 30 31 34 30 20 31 30 0D		Up	
~XX140 11	7E 30 30 31 34 30 20 31 31 0D		Left	
~XX140 12	7E 30 30 31 34 30 20 31 32 0D		Enter (for projection MENU)	
~XX140 13	7E 30 30 31 34 30 20 31 33 0D		Right	
~XX140 14	7E 30 30 31 34 30 20 31 34 0D		Down	
~XX140 15	7E 30 30 31 34 30 20 31 35 0D		Keystone +	
~XX140 16	7E 30 30 31 34 30 20 31 36 0D		Keystone –	
~XX140 17	7E 30 30 31 34 30 20 31 37 0D		Volume –	
~XX140 18	7E 30 30 31 34 30 20 31 38 0D		Volume +	
~XX140 19	7E 30 30 31 34 30 20 31 39 0D		Brightness	
~XX140 20	7E 30 30 31 34 30 20 32 30 0D		Menu	
~XX140 21	7E 30 30 31 34 30 20 32 31 0D		Zoom	
~XX140 28	7E 30 30 31 34 30 20 32 38 0D		Contrast	
~XX140 47	7E 30 30 31 34 30 20 34 37 0D		Source	

SEND from projector automatically

232 ASCII Code	HEX Code	Function	Projector Return	Description
		System status	INFOn	n : 0/1/2/3/4/6/7/8 = Standby/Warming/Cooling/Out of Range/ Lamp fail/Fan Lock/Over Temperature/Lamp Hours Running Out

READ from projector

READ from projector

232 ASCII Code	HEX Code	Function	Projector Return	Description
~XX121 1	7E 30 30 31 32 31 20 31 0D	Input Source Commands	OKn	n: 0/1/2/3/4= None/VGA1 /Video/S-Video/HDMI
~XX122 1	7E 30 30 31 32 32 20 31 0D	Software Version	OKdddd	dddd: FW version
~XX123 1	7E 30 30 31 32 33 20 31 0D	Display Mode	OKn	n : 0/1/2/3/4/5/6/7/ None/Presentation/Bright/Movie/sRGB/User/Blackboard./3D
~XX124 1	7E 30 30 31 32 34 20 31 0D	Power State	OKn	n : 0/1 = Off/On
~XX125 1	7E 30 30 31 32 35 20 31 0D	Brightness	OKn	
~XX126 1	7E 30 30 31 32 36 20 31 0D	Contrast	OKn	
~XX127 1	7E 30 30 31 32 37 20 31 0D	Aspect Ratio	OKn	(SVGA/XGA) n: 0/1/2/3/4 = 4:3/16:9/LBX/Native/AUTO *16:9 or 16:10 depend on Screen Type setting
~XX128 1	7E 30 30 31 32 38 20 31 0D	Color Temperature	OKn	n : 0/1/2 = Warm/Medium/Cold
~XX129 1	7E 30 30 31 32 39 20 31 0D	Projection Mode	OKn	n : 0/1/2/3 = Front-Desktop/ Rear-Desktop/ Front-Ceiling/ Rear-Ceiling
~XX150 1	7E 30 30 31 35 30 20 31 0D	Information	OKabbbbccdddde	a : 0/1 = Off/On bbbb: LampHour cc: source 00/01/02/03/04/05/ = None/VGA1/VGA2/Video/S-Video/HDMI dddd: FW version e : Display mode 0/1/2/3/4/5/6/7=None/Presentation/Bright/Movie/sRGB/User/ Blackboard/3D
~XX151 1	7E 30 30 31 35 31 20 31 0D	Model name	OKn	n:1/2= SVGA/ XGA/
~XX108 1	7E 30 30 31 30 38 20 31 0D	Lamp Hours	OKbbbb	bbbb: LampHour
~XX108 2	7E 30 30 31 30 38 20 31 0D	Cumulative Lamp Hours	OKbbbbb	bbbbb: (5 digits) Total Lamp Hours
~XX321 1	7E 30 30 33 32 31 20 31 0D	Filter Usage Hours	OKbbbb	bbbb: Filter Usage Hours

Ceiling Mount Installation

1. To prevent damage to your projector, please use the Optoma ceiling mount.
2. If you wish to use a third party ceiling mount kit, please ensure the screws used to attach a mount to the projector meet the following specifications:
   - Screw type: M4*3
   - Minimum screw length: 10mm

Note

- Please note that damage resulting from incorrect installation will void the warranty.

Note

Warning:

1. If you buy a ceiling mount from another company, please be sure to use the correct screw size. Screw size will vary depending on the thickness of the mounting plate.
2. Be sure to keep at least 10 cm gap between the ceiling and the bottom of the projector.
3. Avoid installing the projector near a heat source.

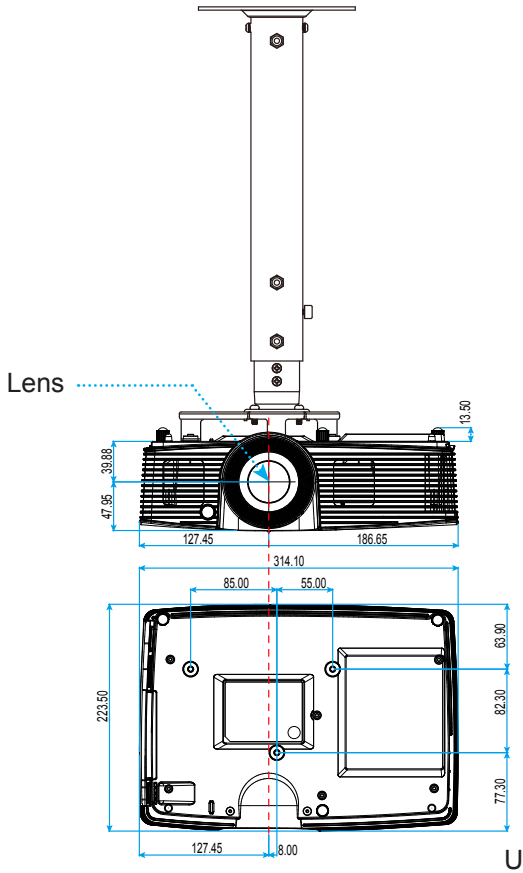

Unit: mm

Optoma Global Offices

For service or support please contact your local office.

USA

3178 Laurelview Ct.
Fremont, CA 94538, USA
www.optomausa.com

888-289-6786
510-897-8601
services@optoma.com

Canada

3178 Laurelview Ct.
Fremont, CA 94538, USA
www.optomausa.com

888-289-6786
510-897-8601
services@optoma.com

Latin America

3178 Laurelview Ct.
Fremont, CA 94538, USA
www.optomausa.com

888-289-6786
510-897-8601
services@optoma.com

Europe

42 Caxton Way, The Watford Business Park
Watford, Hertfordshire,
WD18 8QZ, UK
www.optoma.eu
Service Tel : +44 (0)1923 691865

+44 (0) 1923 691 800
+44 (0) 1923 691 888
service@tsc-europe.com

Benelux BV

Randstad 22-123
1316 BW Almere
The Netherlands
www.optoma.nl

+31 (0) 36 820 0253
+31 (0) 36 548 9052

France

Bâtiment E
81-83 avenue Edouard Vaillant
92100 Boulogne Billancourt, France

+33 1 41 46 12 20
+33 1 41 46 94 35
savoptoma@optoma.fr

Spain

C/ José Hierro,36 Of. 1C
28522 Rivas VaciaMadrid,
Spain

+34 91 499 06 06
+34 91 670 08 32

Deutschland

Wiesenstrasse 21 W
D40549 Düsseldorf,
Germany

+49 (0) 211 506 6670
+49 (0) 211 506 66799
info@optoma.de

Scandinavia

Lerpeveien 25
3040 Drammen
Norway

+47 32 98 89 90
+47 32 98 89 99
info@optoma.no

PO.BOX 9515
3038 Drammen
Norway

Korea

WOOMI TECH.CO.,LTD.
4F,Minu Bldg.33-14, Kangnam-Ku,
seoul,135-815, KOREA

+82+2+34430004
+82+2+34430005

Japan

東京都足立区綾瀬3-25-18
株式会社オーエス
コンタクトセンター:0120-380-495

info@os-worldwide.com
www.os-worldwide.com

Taiwan

12F., No.213, Sec. 3, Beixin Rd.,
Xindian Dist., New Taipei City 231,
Taiwan, R.O.C.
www.optoma.com.tw

+886-2-8911-8600
+886-2-8911-6550
services@optoma.com.tw
asia.optoma.com

Hong Kong

Unit A, 27/F Dragon Centre,
79 Wing Hong Street,
Cheung Sha Wan,
Kowloon, Hong Kong

+852-2396-8968
+852-2370-1222
www.optoma.com.hk

China

5F, No. 1205, Kaixuan Rd.,
Changning District
Shanghai, 200052, China

+86-21-62947376
+86-21-62947375
www.optoma.com.cn

Regulation & Safety Notices

This appendix lists the general notices of your projector.

FCC notice

This device has been tested and found to comply with the limits for a Class B digital device pursuant to Part 15 of the FCC rules. These limits are designed to provide reasonable protection against harmful interference in a residential installation. This device generates, uses and can radiate radio frequency energy and, if not installed and used in accordance with the instructions, may cause harmful interference to radio communications.

However, there is no guarantee that interference will not occur in a particular installation. If this device does cause harmful interference to radio or television reception, which can be determined by turning the device off and on, the user is encouraged to try to correct the interference by one or more of the following measures:

- Reorient or relocate the receiving antenna.
- Increase the separation between the device and receiver.
- Connect the device into an outlet on a circuit different from that to which the receiver is connected.
- Consult the dealer or an experienced radio/television technician for help.

Notice: Shielded cables

All connections to other computing devices must be made using shielded cables to maintain compliance with FCC regulations.

Caution

Changes or modifications not expressly approved by the manufacturer could void the user's authority, which is granted by the Federal Communications Commission, to operate this projector.

Operation conditions

This device complies with Part 15 of the FCC Rules. Operation is subject to the following two conditions:

1. This device may not cause harmful interference and
2. This device must accept any interference received, including interference that may cause undesired operation.

Notice: Canadian users

This Class B digital apparatus complies with Canadian ICES-003.

Remarque à l'intention des utilisateurs canadiens

Cet appareil numerique de la classe B est conforme a la norme NMB-003 du Canada.

Declaration of Conformity for EU countries

- EMC Directive 2004/108/EC (including amendments)
- Low Voltage Directive 2006/95/EC
- R & TTE Directive 1999/5/EC (if product has RF function)

Disposal instructions

Do not throw this electronic device into the trash when discarding. To minimize pollution and ensure utmost protection of the global environment, please recycle it.