USA's primary source for projector lamps
myprojectorlamps

PROJECTOR OWNER'S MANUAL

Optoma

DH1011 / EH300 / HD131X / HD25-LV / HD25 / HD2500 ...

Need a replacement lamp for this projector?

www.myprojectorlamps.com

Original manufacturer manual, provided unmodified as a courtesy of MyProjectorLamps.com.
All trademarks belong to their respective owners.

Table of Contents

Table of Contents 1
Usage Notice 2
Safety Information.....2
Precautions.....3
Eye Safety Warnings 6
Introduction.....7
Package Overview.....7
Product Overview 8
Main Unit..... 8
Control Panel 9
Input/Output Connections 10
Remote Control..... 11
Installation 13
Connecting the Projector 13
Connect to Computer/Notebook 13
Connect to Video Sources 14
Connect to 3D Video Devices.....15
Using the 3D glasses.....17
Powering On/Off the Projector.....18
Powering On the Projector..... 18
Powering Off the Projector..... 19
Warning Indicator..... 20
Adjusting the Projected Image.....21
Adjusting the Projector's Height 21
Adjusting the Projector's Focus 22
Adjusting Projection Image Size 22
User Controls 24
Control Panel & Remote Control 24
Control Panel 24
Remote Control..... 25
On-screen Display Menus 29
How to operate 29
Menu Tree..... 30
IMAGE 32
IMAGE | Advanced 34
IMAGE | Advanced | Signal (VGA) ... 36
IMAGE | Advanced | Signal (Video) ... 37
DISPLAY..... 38
DISPLAY | 3D 40
SETUP..... 41
SETUP | Audio Settings..... 43
SETUP | Security 44
SETUP | Advanced 45
OPTIONS..... 46
OPTIONS | Lamp Settings..... 48
OPTIONS | Advanced..... 49
Appendices.....50
Troubleshooting 50
Image Problems..... 50
Other Problems..... 52
Remote Control Problems 52
LED Lighting Messages..... 53
On Screen Messages 54
Replacing the Lamp.....55
Compatibility Modes 57
RS232 Commands and Protocol Function List 59
RS232 Pin Assignments 59
RS232 Protocol Function List 60
Ceiling Mount Installation.....64
Optoma Global Offices 65
Regulation & Safety Notices.....67
FCC Notice 67
Declaration of Conformity for EU countries 68
Trademarks.....69

Safety Information

	The lightning flash with arrow head within an equilateral triangle is intended to alert the user to the presence of uninsulated “dangerous voltage” within the product’s enclosure that may be of sufficient magnitude to constitute a risk of electric shock to persons.
	The exclamation point within an equilateral triangle is intended to alert the user to the presence of important operating and maintenance (servicing) instructions in the literature accompanying the appliance.

WARNING: TO REDUCE THE RISK OF FIRE OR ELECTRIC SHOCK, DO NOT EXPOSE THIS APPLIANCE TO RAIN OR MOISTURE. DANGEROUS HIGH VOLTAGES ARE PRESENT INSIDE THE ENCLOSURE. DO NOT OPEN THE CABINET. REFER SERVICING TO QUALIFIED PERSONNEL ONLY.

Class B emissions limits

This Class B digital apparatus meets all requirements of the Canadian Interference-Causing Equipment Regulations.

Important Safety Instruction

1. Do not block any ventilation openings. To ensure reliable operation of the projector and to protect from over heating, it is recommended to install the projector in a location that does not block ventilation. As an example, do not place the projector on a crowded coffee table, sofa, bed, etc. Do not put the projector in an enclosure such as a book case or a cabinet that restricts air flow.
2. Do not use the projector near water or moisture. To reduce the risk of fire and/or electric shock, do not expose the projector to rain or moisture.
3. Do not install near heat sources such as radiators, heaters, stoves or any other apparatus such as amplifiers that emits heat.
4. Clean only with dry cloth.
5. Only use attachments/accessories specified by the manufacturer.
6. Do not use the unit if it has been physically damaged or abused. Physical damage/abuse would be (but not limited to):
   - Unit has been dropped.
   - Power supply cord or plug has been damaged.
   - Liquid has been spilled on to the projector.
   - Projector has been exposed to rain or moisture.
   - Something has fallen in the projector or something is loose inside.

   Do not attempt to service the unit yourself. Opening or removing covers may expose you to dangerous voltages or other hazards. Please call Optoma before you send the unit for repair.
7. Do not let objects or liquids enter the projector. They may touch dangerous voltage points and short out parts that could result in fire or electric shock.
8. See projector enclosure for safety related markings.
9. The unit should only be repaired by appropriate service personnel.

Precautions

Please follow all warnings, precautions and maintenance as recommended in this user's guide.

Warning- Do not look into the projector's lens when the lamp is on. The bright light may hurt your eyes.

Warning- To reduce the risk of fire or electric shock, do not expose this projector to rain or moisture.

Warning- Please do not open or disassemble the projector as this may cause electric shock.

Warning- When replacing the lamp, please allow the unit to cool down.

Warning- This projector will detect the life of the lamp itself. Please be sure to change the lamp when it shows warning messages.

Warning- Reset the "Lamp Reset" function from the on-screen display "System|Lamp Setting" menu after replacing the lamp module.

Warning- When switching the projector off, please ensure the cooling cycle has been completed before disconnecting power. Allow 90 seconds for the projector to cool down.

Warning- Do not use lens cap when projector is in operation.

Warning- When the lamp is approaching to the end of its life time, the message "Replacement suggested" will show on the screen. Please contact your local reseller or service center to change the lamp as soon as possible.

Warning- Do not look into or point the laser pointer on your remote control into your or someone's eyes. Laser pointer can cause permanent damage to eyesight.

Note

- When the lamp reaches the end of its life, the projector will not turn back on until the lamp module has been replaced. To replace the lamp, follow the procedures listed under "Replacing the Lamp" section.

Do:

- Turn off and unplug the power plug from the AC outlet before cleaning the product.
- Use a soft dry cloth with mild detergent to clean the display housing.
- Disconnect the power plug from AC outlet if the product is not being used for a long period of time.

Do not:

- Block the slots and openings on the unit provided for ventilation.
- Use abrasive cleaners, waxes or solvents to clean the unit.
- Use under the following conditions:
  - In extremely hot, cold or humid environments.
    - Ensure that the ambient room temperature is within 5°C ~ 40°C
    - Relative humidity is 10% ~ 85%
  - In areas susceptible to excessive dust and dirt.
  - Near any appliance generating a strong magnetic field.
  - In direct sunlight.

Viewing 3D projection using the 3D function

IMPORTANT SAFETY INFORMATION. READ THE FOLLOWING WARNINGS BEFORE YOU OR YOUR CHILD USE THE 3D FUNCTION.

Warning

- Children and teenagers may be more susceptible to health issues associated with viewing in 3D and should be closely supervised when viewing these images.

Photosensitive Seizure Warning and Other Health Risks

- Some viewers may experience an epileptic seizure or stroke when exposed to certain flashing images or lights contained in certain Projector pictures or video games. If you suffer from, or have a family history of epilepsy or strokes, please consult with a medical specialist before using the 3D function.
- Even those without a personal or family history of epilepsy or stroke may have an undiagnosed condition that can cause photosensitive epileptic seizures.
- Pregnant women, the elderly, sufferers of serious medical condi-

tions, those who are sleep deprived or under the influence of alcohol should avoid utilizing the unit's 3D functionality.

- If you experience any of the following symptoms, stop viewing 3D pictures immediately and consult a medical specialist: (1) altered vision; (2) light-headedness; (3) dizziness; (4) involuntary movements such as eye or muscle twitching; (5) confusion; (6) nausea; (7) loss of awareness; (8) convulsions; (9) cramps; and/ or (10) disorientation. Children and teenagers may be more likely than adults to experience these symptoms. Parents should monitor their children and ask whether they are experiencing these symptoms.
- Watching 3D projection may also cause motion sickness, perceptual after effects, disorientation, eye strain and decreased postural stability. It is recommended that users take frequent breaks to lessen the potential of these effects. If your eyes show signs of fatigue or dryness or if you have any of the above symptoms, immediately discontinue use of this device and do not resume using it for at least thirty minutes after the symptoms have subsided.
- Watching 3D projection while sitting too close to the screen for an extended period of time may damage your eyesight. The ideal viewing distance should be at least three times the screen height. It is recommended that the viewer's eyes are level with the screen.
- Watching 3D projection while wearing 3D glasses for an extended period of time may cause a headache or fatigue. If you experience a headache, fatigue or dizziness, stop viewing the 3D projection and rest.
- Do not use the 3D glasses for any other purpose than for watching 3D projection. Wearing the 3D glasses for any other purpose (as general spectacles, sunglasses, protective goggles, etc.) may be physically harmful to you and may weaken your eyesight.
- Viewing in 3D projection may cause disorientation for some viewers. Accordingly, DO NOT place your 3D PROJECTOR near open stairwells, cables, balconies, or other objects that can be tripped over, run into, knocked down, broken or fallen over.

Eye Safety Warnings

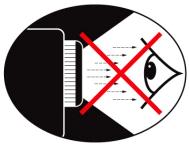

- Avoid staring/facing directly into the projector beam at all times. Keep your back to the beam as much as possible.
- When projector is used in a classroom, adequately supervise students when they are asked to point out something on the screen.
- In order to minimize the lamp power, use room blinds to reduce ambient light levels.

Package Overview

Unpack and inspect the box contents to ensure all parts listed below are in the box. If something is missing, please contact Optoma customer service.

Projector with lens cap

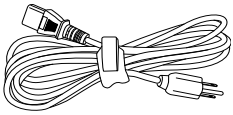

Power Cord 1.8m

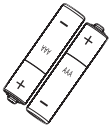

2 × AAA Batteries

IR Remote Control
(Remote may vary depending on model)

Note

❖ Due to different applications in each Country, some regions may have different accessories.

Documentation :

- ☑ Warranty Card
- ☑ Quick Start Card
- ☑ WEEE Card (for EMEA only)

Product Overview

Main Unit

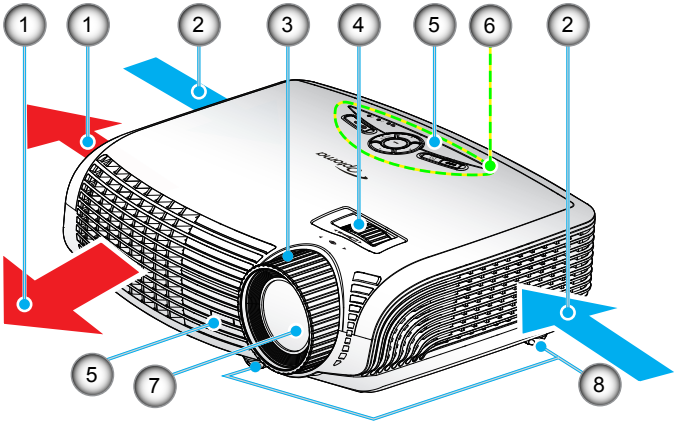

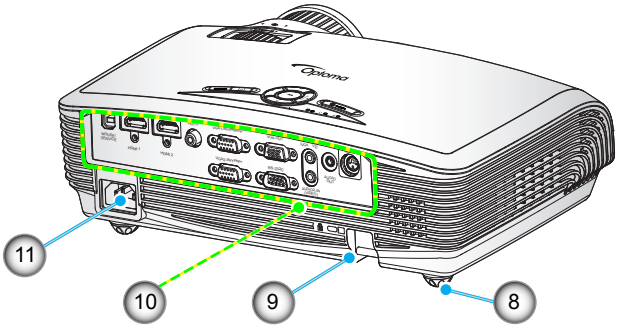

NOTE

- The interface is subject to model's specifications.
- Do not block projector in/out air vents.

1. Ventilation (outlet)
2. Ventilation (inlet)
3. Focus Ring
4. Zoom Ring
5. IR Receivers
6. Control Panel
7. Lens
8. Tilt-Adjustment Feet
9. Security Bar
10. Input / Output Connections
11. Power Socket

Control Panel

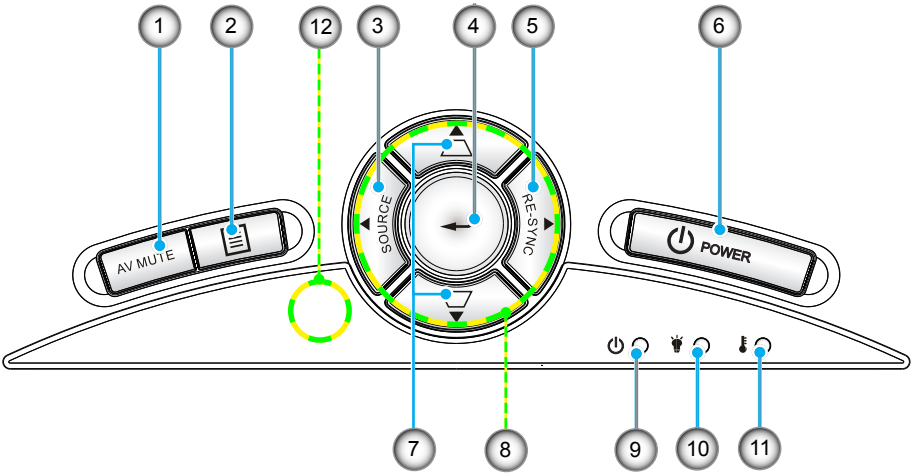

1. AV Mute
2. Menu
3. Source
4. Enter
5. Re-Sync
6. Power
7. Keystone Correction
8. Four Directional Select Keys
9. On/Standby LED
10. Lamp LED
11. Temp LED
12. IR Receiver

Input/Output Connections

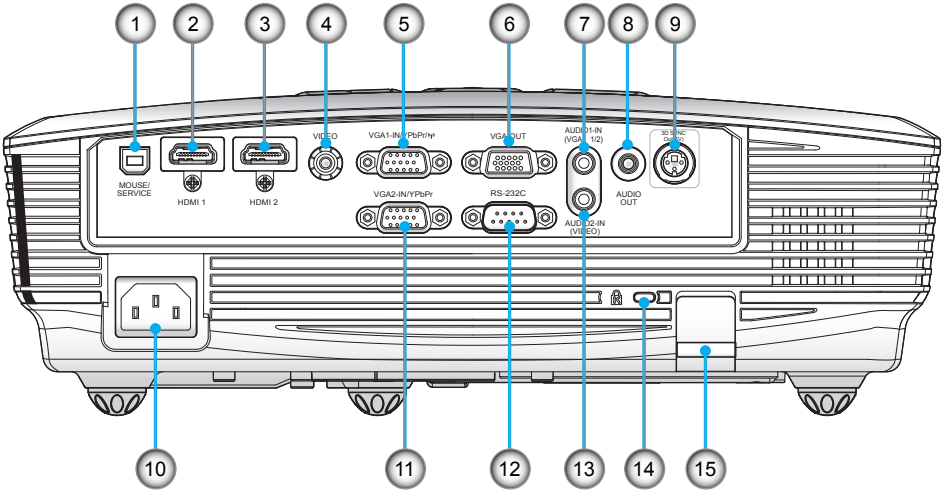

1. USB Service for firmware upgrade
2. HDMI 1 Connector (v1.4a 3D supported)
3. HDMI 2 Connector (v1.4a 3D supported)
4. Composite Video Input Connector
5. VGA1-In/YPbPr/((•)) Connector
   (PC Analog Signal/Component Video Input/HDTV/YPbPr/ Wireless function via VGA Dongle)
6. VGA-Out Connector (Monitor Loop-through Output)
7. Audio1 Input for VGA1/VGA2 (3.5mm mini jack)
8. Audio Output Connector (3.5mm Mini Jack)
9. 3D Sync Out (5V)
10. Power Socket
11. VGA2-In/YPbPr Connector
    (PC Analog Signal/Component Video Input/HDTV/YPbPr)
12. RS-232 Connector (9-pin)
13. Audio2 Input for Video (3.5mm mini jack)
14. Kensington™ Lock Port
15. Security Bar

NOTE

- Monitor loop through only support in VGA1-In/ YPbPr.
- The interface is subject to model's specifications.
- VGA dongle is a optional accessory. Please contact with Optoma service for details.

Remote Control

Type A

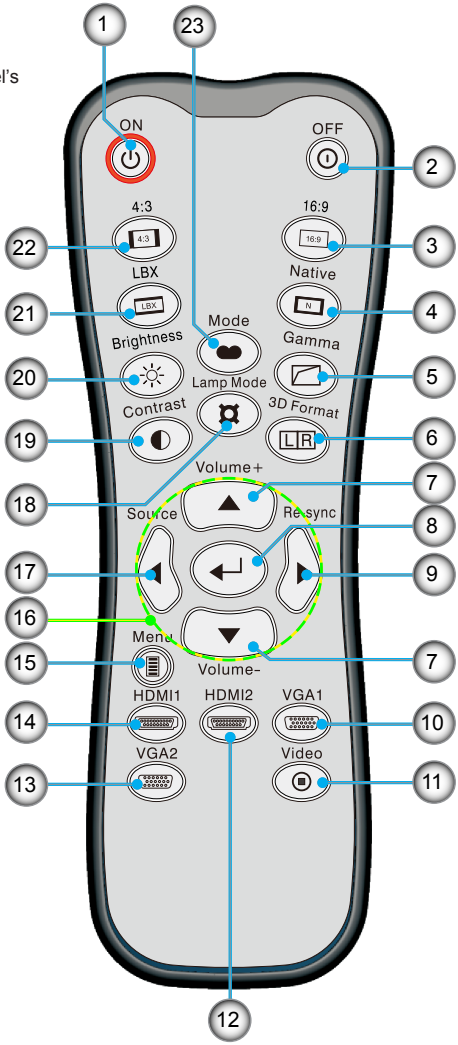

1. Power On
2. Power Off
3. 16:9
4. Native
5. Gamma
6. 3D format
7. Vol+/-
8. Enter
9. Re-Sync
10. VGA1 Source
11. Video Source
12. HDMI2 Source
13. VGA2 Source
14. HDMI1 Source
15. Menu
16. Four Directional Select Keys
17. Source
18. Lamp Mode
19. Contrast
20. Brightness
21. LBX
22. 4:3
23. Mode

Note

- The remote is subject to model's specifications.

Type B

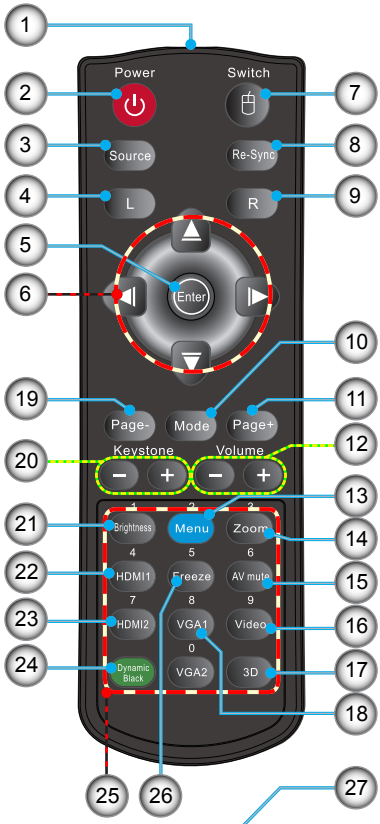

Type C

NOTE

❖ The remote is subject to model's specifications.

1. LED Indicator
2. Power On/Off
3. Source
4. Mouse Left Click
5. Enter
6. Four Directional Select Keys / Mouse control
7. Switch (turn on/off mouse function)
8. Re-Sync
9. Mouse Right Click
10. Display Mode
11. Page Up
12. Volume +/-
13. Menu
14. Zoom
15. AV mute
16. Video
17. 3D
18. VGA1
19. Page Down
20. Keystone +/-
21. Brightness
22. HDMI1
23. HDMI2
24. Dynamic Black
25. Numbered keypad (for password input)
26. Freeze
27. Laser Pointer

Connecting the Projector

Connect to Computer/Notebook

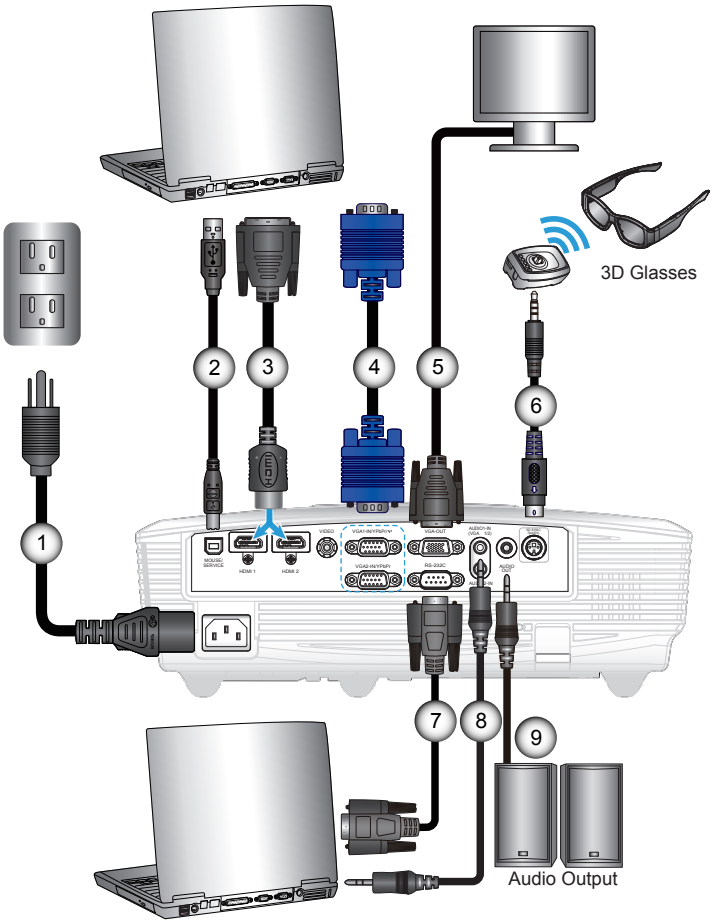

- Due to the difference in applications for each country, some regions may have different accessories.
- (*) Optional accessory

1.....Power Cord
2..... *USB Cable (Mouse control)
3.....*DVI/HDMI Cable
4..... *VGA Cable
5.....* VGA Out Cable
6.....*3D Emitter cable
7.....*RS232 Cable
8.....*Audio Input Cable
9.....*Audio Output Cable

Connect to Video Sources

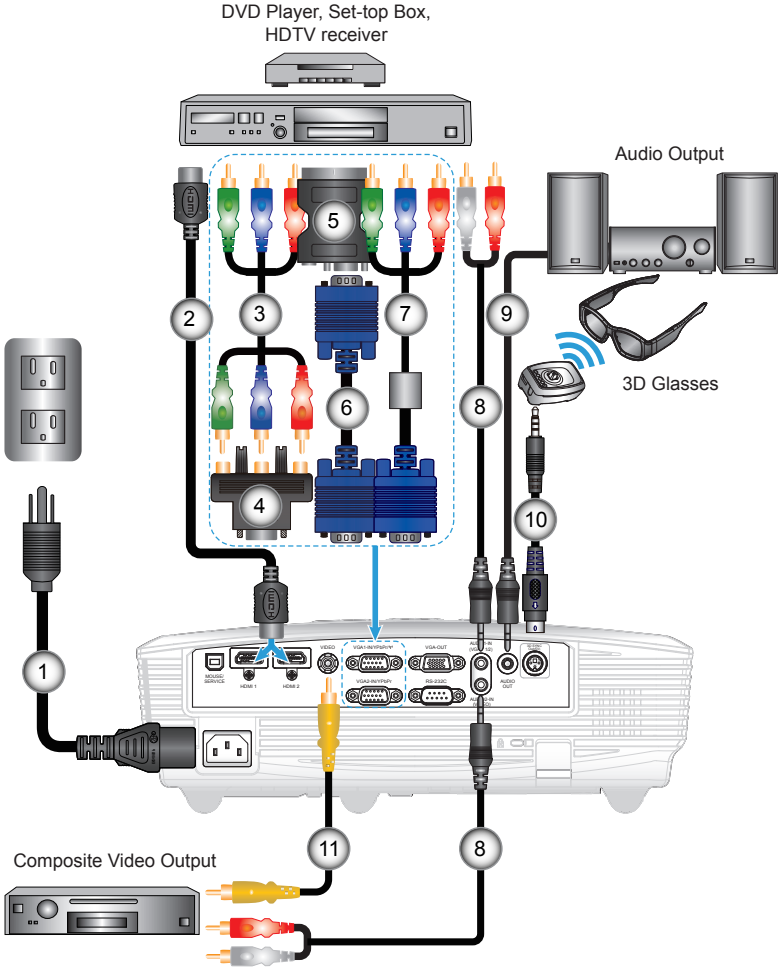

- Due to the difference in applications for each country, some regions may have different accessories.
- For more detailed information about connecting to the 3D emitter and 3D glasses, please refer to their user's guides.
- Use high speed HDMI cable to connect Blue-ray 3D player.
- (*) Optional Accessory

1	Power Cord
2	*HDMI Cable
3	*3 RCA Component Cable
4	*VGA/RCA Adaptor
5	*SCART/VGA Adaptor
6	*VGA Cable
7	*VGA/RCA Cable
8	*Audio Cable Jack/RCA
9	*Audio Output Cable
10	*3D Emitter cable
11	*Composite Video Cable

Connect to 3D Video Devices

Once you have connected your devices together with HDMI cables, as shown in the diagram, you are ready to begin. Power ON your 3D video source and your 3D projector.

- The 3D video source device must be powered on before the 3D projector.

PlayStation® 3 Games

- Make sure that you have updated your console to the latest software version.
- Go to the “Settings menu -> Display settings -> Video output -> HDMI”. Select “Automatic” and follow the on-screen instructions.
- Insert your 3D game disc. Alternatively you can download games (and 3D updates) via the PlayStation® network.
- Launch the game. In the in-game menu, select “Play in 3D”.

Blu-ray 3D™ Player

- Make sure that your player can support 3D Blu-ray™ disc and that 3D output is enabled.
- Insert the 3D Blu-ray™ disc into the player, press “Play”.

3D TV (e.g. SKY 3D, DirecTV)

- Contact your TV service provider to enable any 3D channels on your channel package.
- Once enabled, switch to the 3D channel.
- You should see two images side-by-side.
- Switch to the “SBS Mode” of the 3D projector. The option is located in the “Display” section of the projector OSD menu.

3D Device (e.g. 3D DV/DC) with 2D 1080i side by side signal output

- Connect your 3D device and switch to out 3D content with 2D side-by-side output to 3D Projector.
  - You should see two images side-by-side.
- Switch to the “SBS Mode” of the 3D projector. The option is located in the “Display” section of the projector OSD menu.

- If input video is normal 2D, please press “3D Format” and switch to “Auto”.
- If “SBS Mode” is active, 2D video content will not display correctly.

If watching 3D content from an HDMI 1.4a source (e.g. 3D Blu-ray) your 3D glasses should always be in sync. If watching 3D content from an HDMI 1.3 source (e.g. 3D broadcast using SBS mode) it may be necessary to use the projector’s 3D Sync-Invert option to optimize your 3D experience. The option is located in the “Display ->3D” section of the projector OSD menu.

3D Broadcast
3D Blu-ray™ Disc
3D Console Games
SKY+HD, cable/satellite box
3D Blu-ray™ Player
PlayStation® 3
3D Glasses
Full 3D 1080p DLP® Projector

Using the 3D glasses

- For more detailed information, please refer to 3D glasses user's guide.

1. To turn ON 3D glasses: Press the "Power" button and the LED will flash one time indicating the glasses are ready to use 3D mode.
2. Verify that 3D content is being sent to the projector and signal is compatible with projector specifications.
3. Turn on the "3D Mode" (DLP-Link/VESA 3D - depending on which type of glasses you are using) of the 3D projector. The option is located in the "Display" section of the projector OSD menu.
4. Turn on 3D glasses and verify image appears in 3D without eyestrain.
5. If the image does not appear in 3D, please check 3D device set up correctly to send out 3D image or not. Or "SBS Mode" should turn on when input signal is 2D 1080i side-by-side and repeat previous steps 1 ~ 4.
6. It may be necessary to use projector's "3D Sync-Invert" option to optimize your 3D experience. The option is located in the "Display" section of the projector OSD menu.
7. To turn OFF 3D glasses: Press the "Power" button and hold until the LED switches off.
8. For more detailed information, please refer to the 3D glasses user's guide, or manufacturer's Website.

Powering On/Off the Projector

Powering On the Projector

1. Remove the lens cap. ❶
2. Securely connect the power cord and signal cable. When connected, the ON/STANDBY LED will turn Amber.
3. Turn on the lamp by pressing "⏻" button either on the top of the projector or on the remote. The ON/STANDBY LED will now turn Green. ❷

   The startup screen will display in approximately 10 seconds. The first time you use the projector, you will be asked to select the preferred language and power saving mode.

4. Turn on and connect the source that you want to display on the screen (computer, notebook, video player, etc). The projector will detect the source automatically. If not, push menu button and go to "OPTIONS".
   Make sure that the "Source Lock" has been set to "Off".

❖ If you connect multiple sources at the same time, press the "SOURCE" button on the control panel or direct source keys on the remote control to switch between inputs.

NOTE

❖ When Power mode (Standby) is set to Eco (<0.5W), the VGA output and Audio pass-through will be deactivated when the projector is in standby.

NOTE

❖ Turn on the projector first and then select the signal sources.

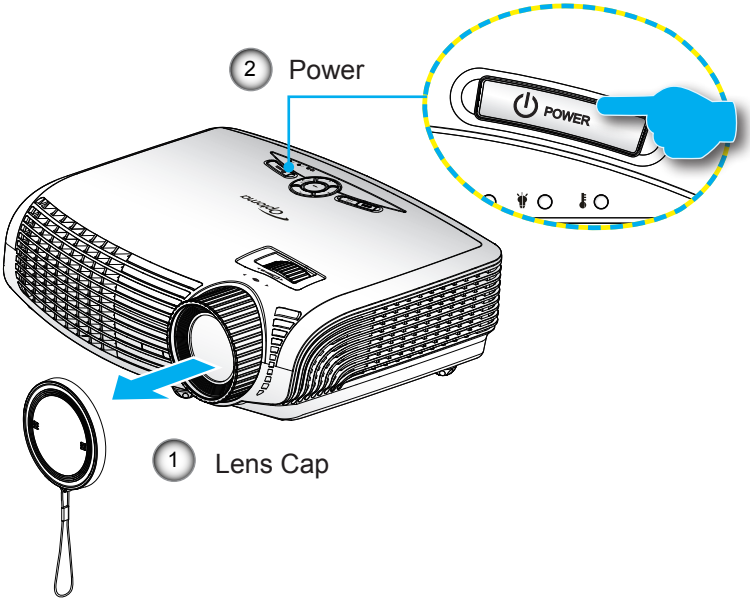

Powering Off the Projector

1. Press the "⏻" button on the remote control or on the control panel to turn off the projector.
   The following message will be displayed on the screen.

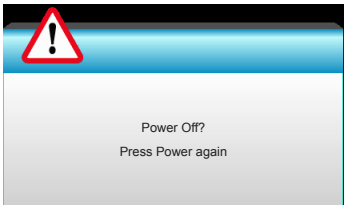

   Press the "⏻" button again to confirm otherwise the message will disappear after 15 seconds. When you press the "⏻" button for the second time, the projector will display countdown timer and will shut down.
2. The cooling fans continue to operate for about 10 seconds for cooling cycle and the ON/STANDBY LED will Flash Green. When the ON/STANDBY LED lights solid Amber, the projector has entered standby mode.

   If you wish to turn the projector back on, you must wait until the projector has completed the cooling cycle and has entered standby mode. Once in standby mode, simply press "⏻" button to restart the projector.
3. Disconnect the power cord from the electrical outlet and the projector.
4. Do not turn on the projector immediately following a power off procedure.

Warning Indicator

Note

- Contact the nearest service center if the projector displays these symptoms. See pages 65-66 for more information.

When the warning indicators (see below) come on, the projector will automatically shutdown:

- “LAMP” LED indicator is lit red and if “On/Standby” indicator flashes amber.
- “TEMP” LED indicator is lit red and if “On/Standby” indicator flashes amber. This indicates the projector has overheated. Under normal conditions, the projector can be switched back on.
- “TEMP” LED indicator flashes red and if “On/Standby” indicator flashes amber.

Unplug the power cord from the projector, wait for 30 seconds and try again. If the warning indicator light up again, please contact your nearest service center for assistance.

Adjusting the Projected Image

Adjusting the Projector's Height

The projector is equipped with elevator feet for adjusting the image height.

1. Locate the adjustable foot you wish to modify on the underside of the projector.
2. Rotate the adjustable ring clockwise to raise the projector or counter clockwise to lower it. Repeat with the remaining feet as needed.

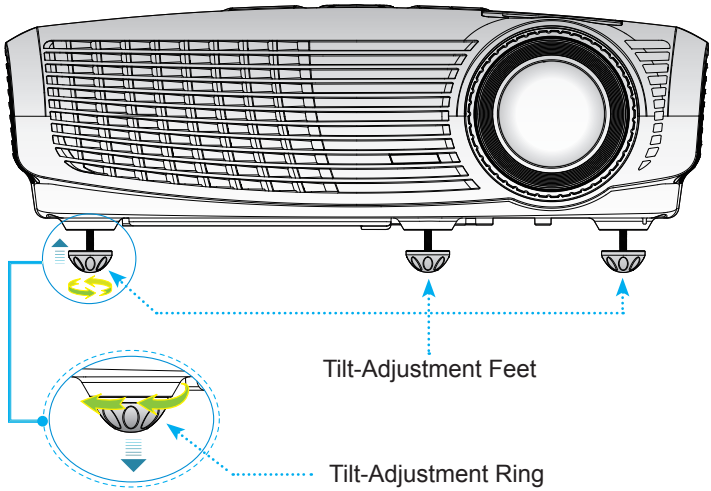

Adjusting the Projector's Zoom / Focus

You may turn the zoom ring to zoom in or out. To focus the image, rotate the focus ring until the image is clear.

- The projector will focus at distances from 4.92 to 32.80 feet (1.5 to 10.0 meters).

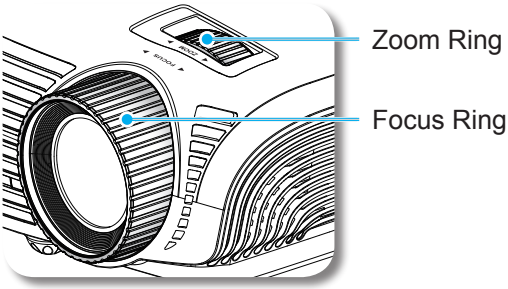

Adjusting Projection Image Size

- Projection Image Size from 37.6" to 301.1" (0.96 to 7.65 meters).

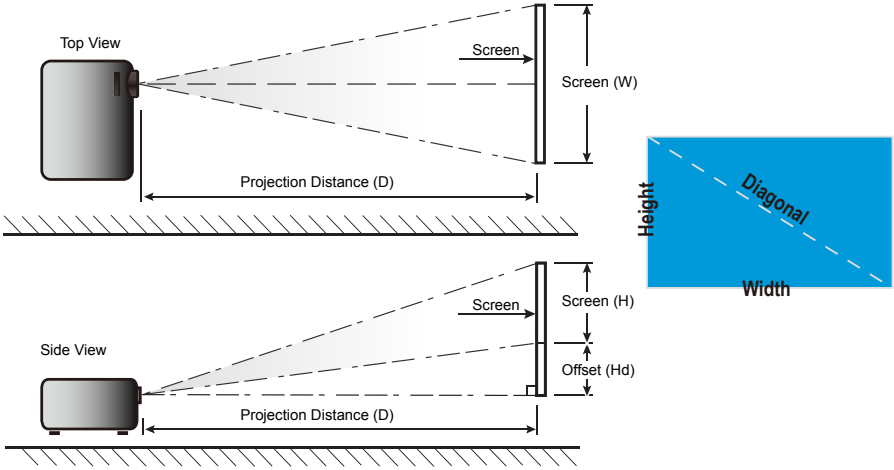

Diagonal length (inch) size of 16:9 Screen	Screen Size W x H				Projection Distance (D)				Offset (Hd)	
	(m)		(inch)		(m)		(feet)			
	Width	Height	Width	Height	wide	tele	wide	tele	(m)	(feet)
37.6	0.83	0.47	32.8	18.4	-	1.5	-	4.92	0.07	0.25
40.0	0.89	0.50	35.0	19.6	1.3	1.6	4.36	5.22	0.08	0.26
60.0	1.33	0.76	52.4	29.8	2.0	2.4	6.53	7.84	0.12	0.40
70.0	1.55	0.87	61.0	34.3	2.3	2.8	7.62	9.15	0.14	0.46
80.0	1.77	1.00	69.7	39.4	2.7	3.2	8.71	10.46	0.16	0.52
90.0	1.99	1.12	78.3	44.1	3.0	3.6	9.80	11.76	0.18	0.59
100.0	2.21	1.25	87.0	49.2	3.3	4.0	10.89	13.07	0.20	0.66
120.0	2.66	1.49	104.7	58.7	4.0	4.8	13.07	15.68	0.24	0.78
150.0	3.32	1.87	130.7	73.6	5.0	6.0	16.34	19.60	0.30	0.98
180.0	3.98	2.24	156.7	88.2	6.0	7.2	19.60	23.53	0.36	1.18
250.0	5.53	3.11	217.7	122.4	8.3	10.0	27.23	32.68	0.50	1.63
301.1	6.67	3.75	262.4	147.6	10.0	-	32.80	-	0.60	1.97

❖ This table is for user's reference only.

Control Panel & Remote Control

Control Panel

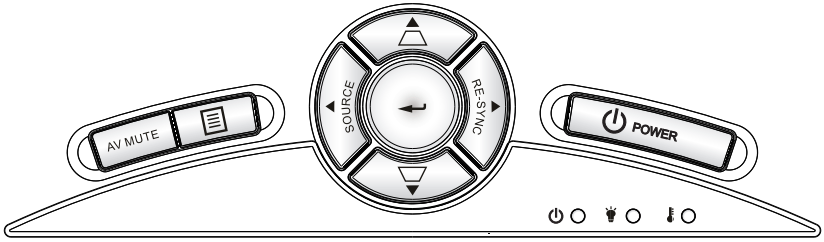

Using the Control Panel		
POWER	⏻	Refer to the “Power On/Off the Projector” section on pages 18-19.
RE-SYNC		Automatically synchronize the projector to the input source.
Enter	↵	Confirm your item selection.
SOURCE		Press “SOURCE” to select an input signal.
Menu	☰	Press “Menu” to launch the on-screen display (OSD) menu. To exit OSD, Press “Menu” again.
AV MUTE		Momentarily turns off/on the audio and video.
Four Directional Select Keys		Use ▲ ▼ ◀ ▶ to select items or make adjustments to your selection.
Keystone		Use ⏢ ⏢ to adjust image distortion caused by tilting the projector. (±40 degrees)
Lamp LED	○	Indicate the projector’s lamp status.
Temp LED	○	Indicate the projector’s temperature status.
ON/STAND-BY LED	○	Indicate the projector’s status.

Remote Control

Type A

Using the Remote Control		
Power On		Refer to the “Power On” section on page 18.
Power Off		Refer to the “Power On/Off the Projector” section on page 19.
Lamp Mode		Increase/Decrease the luminance of the image. (refer to page 48)
Mode		Select a display mode for optimised settings for different applications. (refer to page 32)
4:3	4:3	Scale the image at a 4:3 (1440x1080) aspect ratio.
16:9	16:9	Scale the image at a 16:9 (1920x1080) aspect ratio.
LBX	LBX	Enable the viewing of the letterboxed nonanamorphically enhanced movie at full screen width. Part of the original image will be lost if the image aspect ratio is less than 2.35:1.
Native	N	The input source will be displayed without scaling.
Gamma		Set up gamma curve type.
Brightness		Adjust the brightness of the image.
Contrast		Control the degree of difference between the lightest and darkest parts of the picture.
3D Format	L R	Manually select a 3D mode that matches your 3D content.
Vol+ / Vol -		Adjust to increase / decrease the volume.

Using the Remote Control

Type A

Enter		Confirm your item selection.
Source		Press “Source” to select an input signal.
Re-sync		Automatically synchronizes the projector to the input source.
Menu		Display or exit the on-screen display menus for projector.
HDMI1		Press “HDMI1” to choose source from HDMI 1 connector.
HDMI2		Press “HDMI2” to choose source from HDMI 2 connector.
VGA1		Press “VGA1” to choose source from VGA1-In/YPbPr/(( )) connector.
VGA2		Press “VGA2” to choose source from VGA2-In/YPbPr connector.
Video		Press “Video” to choose Composite video source.
Four Directional Select Keys		Use ▲ ▼ ◀ ▶ to select items or make adjustments to your selection.

Remote Control

Type B/C

Using the Remote Control	
Power	Refer to the “Power On/Off the Projector” section on pages 18-19.
L Button	Mouse left click.
R Button	Mouse right click.
Page +	Use this button to page up.
Page -	Use this button to page down.
Enter	Confirm your item selection.
Source	Press “Source” to select an input signal.
Re-Sync	Automatically synchronizes the projector to the input source.
Four Directional Select Keys	Use ▲▼◀▶ to select items or make adjustments to your selection.
PC/Mouse Control	Use ▲▼◀▶ for emulation of USB mouse via USB when you press “Switch” button.
Keystone +/-	Adjust image distortion caused by tilting the projector.
Volume +/-	Adjust to increase / decrease the volume.
Brightness	Adjust the brightness of the image.
Dynamic Black	Automatically adjusts the picture brightness to give optimum contrast performance.
Menu	Press “Menu” to launch the on-screen display (OSD) menu. To exit OSD, press “Menu” again.
HDMI1	Press “HDMI1” to choose source from HDMI 1 connector.

Type B/C

Using the Remote Control

HDMI2	Press “HDMI2” to choose source from HDMI 2 connector.
Freeze	Press “Freeze” to pause the screen image. Press this button again to unlock.
AV mute	Momentarily turns off/on the audio and video.
VGA1	Press “VGA1” to choose source from VGA1-In/YPbPr/(( )) connector.
VGA2	Press “VGA2” to choose source from VGA1-In/YPbPr connector.
Video	Press “Video” to choose Composite video source.
Switch	USB mouse switch. Turns mouse function on/off. Press once to turn on the mouse function. For the mouse function to work, USB cable must be connected between the projector and computer.
Mode	Select the display mode from Cinema, Bright, Photo, Reference, 3D and User. (refer to page 32)
Zoom	Zoom in on an image. Press ◄► buttons to alter zoom.
3D	Press the “3D” to turn the 3D OSD menu on/off.

On-screen Display Menus

The Projector has multilingual On-screen Display menus that allow you to make image adjustments and change a variety of settings. The projector will automatically detect the source.

How to operate

1. To open the OSD menu, press “Menu” on the Remote Control or Control Panel.
2 When OSD is displayed, use ◄► keys to select any item in the main menu. While making a selection on a particular page, press ▼ or “Enter” key to enter sub menu.
3. Use ▲▼ keys to select the desired item in the sub menu and then press ► or “Enter” key to view further settings. Adjust the settings by ◄► key.
4. Select the next item to be adjusted in the sub menu and adjust as described above.
5. Press “Enter” or “Menu” to confirm, and the screen will return to the main menu.
6. To exit, press “Menu” again. The OSD menu will close and the projector will automatically save the new settings.

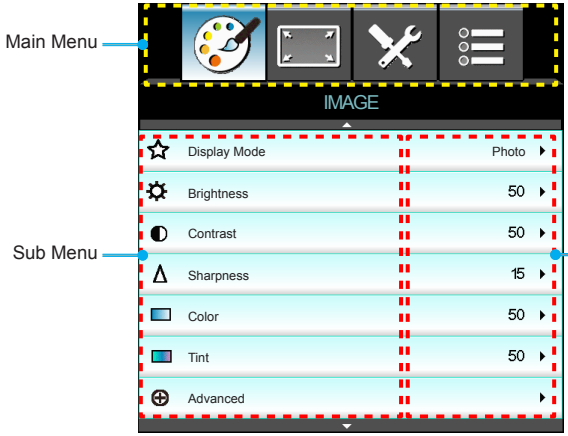

Menu Tree

Main Menu	Sub Menu			Settings
Image	Display Mode			Cinema / Reference / Photo / Bright / 3D / User /
	Brightness			-50~50
	Contrast			-50~50
	Sharpness			1~15
	#1 Color			-50~50
	#1 Tint			-50~50
	Advanced	Noise Reduction		0~10
		Gamma		Film / Video / Graphics / Standard
		BrilliantColor™		1~10
		Dynamic Black		Off / Low / High
		Color Temp.		Warm / Medium / Cold
		Color Settings	Red / Green / Blue / Cyan / Magenta / Yellow /	Hue / Saturation / Gain
			White	Red / Green / Blue
			Reset	
			Exit	
		Color Space		AUTO / RGB (0-255) / RGB (16-235) / YUV
		Signal (VGA)	Automatic	On / Off
			Phase	0~31
			Frequency	-5~5
			H. Position	-5~5
			V. Position	-5~5
			Exit	
		Signal (Video)	White Level	-50~50
			Black Level	-50~50
			Saturation	-50~50
			Hue	-50~50
			Exit	
		Exit		
	Reset			
Display	Format			4:3 / 16:9 / LBX / Native / AUTO / Superwide
	Edge Mask			0~10
	Zoom			-5~25
	Image Shift	H		-100~100
		V		-100~100
	V Keystone			-40~40
	3D	3D Mode		DLP-Link / VESA 3D
		3D → 2D		3D / L / R
		#2 3D Format		Auto / SBS / Top and Bottom / Frame Sequential
		#2 3D Sync. Invert		On / Off
		Exit		
Setup	Language			**English / Deutsch / Français / Italiano / Español / Português / Svenska / Nederlands / Norsk/Dansk / Polski / Suomi / Русский / ελληνικά / Magyar / Čeština / فارسی / عربي /繁體中文 / 简体中文 / 日本語 /한국어 / ไทย / Türkçe / Việt / Bahasa Indonesia / Română**
	Projection			
	Menu Location			

Main Menu	Sub Menu	Settings	
Setup	Audio Settings	Internal Speaker	On / Off
		Mute	On / Off
		SRS	On / Off
		Volume	0~10
		Treble	0~10
		Bass	0~10
		Audio Input	Default / Audio1 / Audio2
	Security	Security	On / Off
		Security Timer	Month / Day / Hour
		Change Password	
		Exit	
	Projector ID		0~99
	Advanced	Logo	Default / Neutral
		Logo Capture	
		Closed Captioning	Off / CC1 / CC2
		Wireless	On / Off
		Exit	
Options	Input Source		VGA1 / VGA2 / Video / HDMI1/ HDMI2
	Source Lock		On / Off
	High Altitude		On / Off
	Information Hide		On / Off
	Keypad Lock		On / Off
	Test Pattern		None / Grid / White Pattern
	IR Function		On / Off
	Background Color		Black / Red / Blue / Green / White
	Lamp Settings	Lamp Hours	
		Lamp Reminder	On / Off
		Lamp Mode	Bright / Eco
		Lamp Reset	Yes / No
		Exit	
	Advanced	Direct Power On	On / Off
		Auto Power Off (min.)	0~180
		Sleep Timer (min.)	0~990
		Power Mode (Standby)	Active / Eco
		Exit	
	Reset	Current	Yes / Cancel
		All	Yes / Cancel

NOTE

- Please note that the on-screen display (OSD) menus vary according to the signal type selected and the projector model you are using.
- (#1) “Color” and “Tint” are only supported in Video mode.
- (#2) “3D Sync Invert” is only available when 3D is enabled.

IMAGE

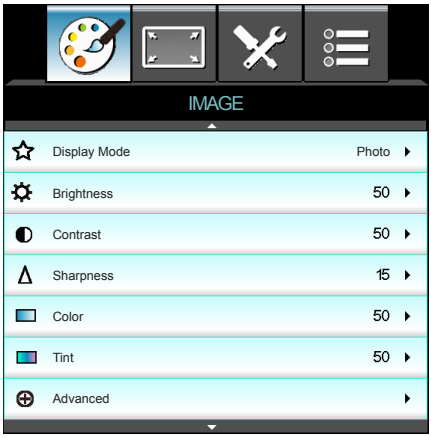

Display Mode

There are many factory presets optimized for various types of images.

- Cinema: For home theater.
- Bright: Maximum brightness from PC input.
- Photo: Optimized for displaying photographic images.
- Reference: This mode is intended to reproduce, as close as possible, the image the way the movie director intended. Color, color temperature, brightness, contrast and gamma settings are all configured to standard reference levels.
- User: User's settings.
- 3D: Recommended setting for 3D mode enabled. Any further adjustments by the user in 3D will be saved in this mode for further use.

Brightness

Adjust the brightness of the image.

- Press the ◄ to darken image.
- Press the ► to lighten the image.

Contrast

The contrast controls the degree of difference between the lightest and darkest parts of the picture.

- Press the ◄ to decrease the contrast.
- Press the ► to increase the contrast.

Sharpness

Adjust the sharpness of the image.

- Press the ◄ to decrease the sharpness.
- Press the ► to increase the sharpness.

Color

Adjust a video image from black and white to fully saturated color.

- Press the ◄ to decrease the color saturation in the image.
- Press the ► to increase the color saturation in the image.

Tint

Adjust the color balance of red and green.

- Press the ◄ to increase the amount of green in the image.
- Press the ► to increase the amount of red in the image.

NOTE

❖ "Color" and "Tint" are only supported for composite and component sources.

IMAGE | Advanced

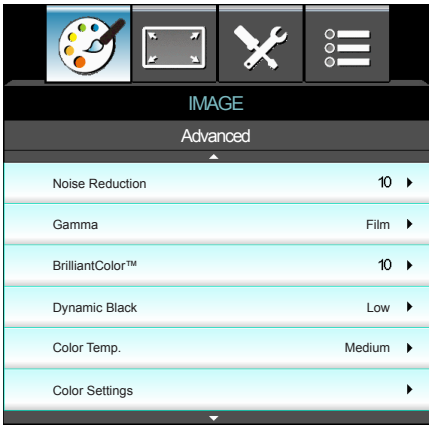

Noise Reduction

The Noise Reduction reduces the amount of visible noise interlaced signals. The range is from “0” to “10”. (0: Off)

Gamma

This allows you to set up gamma curve type. After the initial setup and fine tuning is completed, utilize the Gamma Adjustment steps to optimize your image output.

- Film: for home theater.
- Video: for video or TV source.
- Standard: for standardized setting.
- Graphics: for PC / Photo source.

BrilliantColor™

This adjustable item utilizes a new color-processing algorithm and enhancements to enable higher brightness while providing true, more vibrant colors in picture. The range is from “1” to “10”. If you prefer a stronger enhanced image, adjust toward the maximum setting. For a smoother, more natural image, adjust toward the minimum setting.

Dynamic Black

Dynamic Black enables the projector to automatically optimize the the brightness of the display during dark/light movie scenes to be shown in incredible detail.

Color Temp

If set to cold temperature, the image looks more blue.
(cold image)
If set to warm temperature, the image looks more red.
(warm image)

Color Settings

Press ► into the next menu and then use ▲ or ▼ or ◄ or ►to select item.

- Red/Green/Blue/Cyan/Magenta/Yellow: Use ◄ or ► to select Hue, Saturation and Gain Colors.

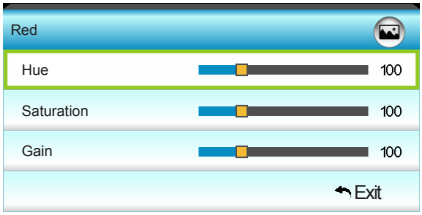

- White: Use ◄ or ► to select Red, Green and Blue Colors.

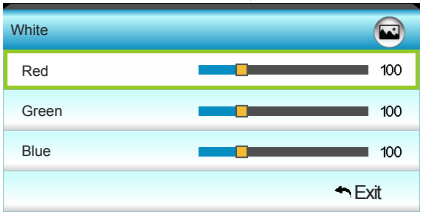

- Reset: Choose "Reset" to return the factory default settings for color adjustments.

Color Space

Select an appropriate color matrix type from AUTO, RGB(0-255), RGB(16-235) or YUV.

IMAGE | Advanced | Signal (VGA)

NOTE

- "Signal" is only supported in Analog VGA (RGB) signal.

Automatic

Automatically configures the signal (the Frequency and Phase items are grayed out). If Automatic is disabled, the Frequency and Phase items will appear for user to manually tune and save the settings.

Phase

Synchronize the signal timing of the display with the graphic card. If the image appears to be unstable or flickers, use this function to correct it.

Frequency

Change the display data frequency to match the frequency of your computer's graphic card. Use this function only if the image appears to flicker vertically.

H. Position

- Press the ◄ to move the image left.
- Press the ► to move the image right.

V. Position

- Press the ◄ to move the image down.
- Press the ► to move the image up.

IMAGE | Advanced | Signal (Video)

NOTE

❖ "Signal" is not supported when the source is HDMI.

White Level

Allow user adjust White Level when inputting Video signals.

Black Level

Allow user adjust Black Level when inputting Video signals.

Saturation

Adjust a video image from black and white to fully saturated color.

- Press the ◄ to decrease the amount of color in the image.
- Press the ► to increase the amount of color in the image.

Hue

Adjust the color balance of red and green.

- Press the ◄ to increase the amount of green in the image.
- Press the ► to increase the amount of red in the image.

DISPLAY

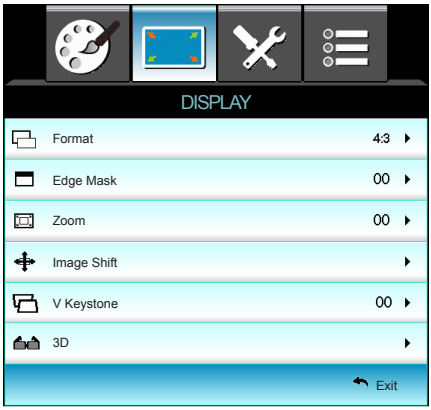

Format

Use this function to choose your desired aspect ratio.

- 4:3: This format is for 4x3 input sources.
- 16:9: This format is for 16x9 input sources, like HDTV and DVD enhanced for Widescreen TV.
- LBX: This format is for non-16x9, letterbox source and for users who use external anamorphic lens to display 2.35:1 aspect ratio using full resolution.
- Native: This format displays the original image without scaling.
- AUTO: Automatically selects the appropriate display format.
- Superwide: This mode scales 2.35:1 sources to fill 100% of image height to remove black bars. (the left and right side of image will be cropped).

Detail informations about LBX mode:

1. Some Letter-Box Format DVDs are not enhanced for 16x9 TVs. In this situation, the image will not look right when displayed in 16:9 mode. In this situation, please try to using the 4:3 mode to view the DVD. If the content is not 4:3, there will be black bars around the image in 16:9 display. For this type of content, you can use LBX mode to fill the image on the 16:9 display.
2. If you use an external anamorphic lens, this LBX mode also allows you to watch a 2.35:1 content (include Anamorphic DVD and HDTV film source) that support anamorphic wide is enhanced for 16x9 Display in a wide 2.35:1 image. In this case, there are no black bars. Lamp power and vertical resolution are fully utilized.

Note

- Each I/O has different setting of “Edge Mask”.
- “Edge Mask” and “Zoom” can’t work at same time.

16:9 Screen	480i/p	576i/p	1080i/p	720p	PC
4:3	1440 x 1080 center				
16:9	1920 x 1080 center				
LBX	1920 x 1440 center, then get the central 1920 x 1080 image to display				
Native	No resize image, 1:1 mapping and centered. This format shows original image without scaling.				
Auto	If this format is select, Screen type will auto become 16:9 (1920x1080) If source is 4:3, auto resize to 1440 x1080 If source is 16:9 auto resize to 1920x1080 If source is 16:10 auto resize to 1920 x 1200 and cut 1920x1080 area to display				
Superwide	Scale to 2534 x 1426 (132% Enlarge), then get the central 1920x1080 image to display				

Edge Mask

Edge mask the image to remove video encoding noise on the edge of video source.

Zoom

- Press the ◄ to reduce the size of an image.
- Press the ► to magnify an image on the projection screen.

Image Shift

Press ► into the next menu as below and then use ▲ or ▼or ◄ or ►to select item.

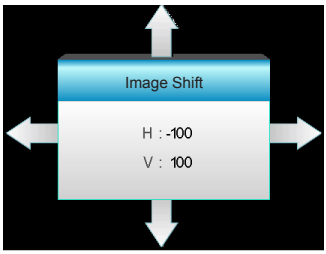

- H: Press the ◄ ► to shift the projected image position horizontally.
- V: Press the ▲ ▼ to shift the projected image position vertically.

V Keystone

Press the ◄ or ► to adjust image distortion vertically and make a squarer image.

DISPLAY | 3D

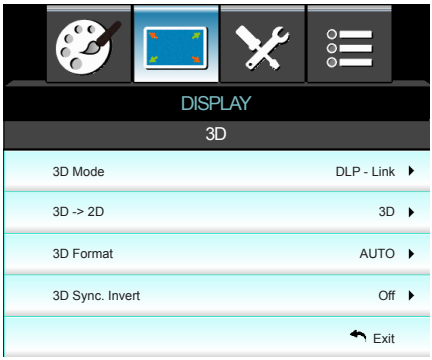

NOTE

- "3D sync. Invert" function wouldn't save the setting. It will set to "Off" when powers on and changes source.
- 3D Format is only supported on 3D Timing on page 58.
- "3D Format" is only supported on non-HDMI 1.4a 3D timing.

3D Mode

- DLP-Link: Select "DLP-Link" to use optimized settings for DLP Link 3D Glasses. (refer to page 17).
- VESA 3D: Select "VESA 3D" to use optimized setting for VESA 3D Glasses. (refer to page 17).

3D -> 2D

- 3D: Display 3D signal.
- L (Left): Display the left frame of 3D content.
- R (Right): Display the right frame of 3D content.

3D Format

- Off: Press the "Off" to disable 3D format conversion.
- SBS: Display 3D signal in "Side-by-Side" format.
- Top and Bottom: Display 3D signal in "Top and Bottom" format.
- Frame Sequential: Display 3D signal in "Frame Sequential" format.

3D Sync. Invert

- Press the "On" to invert left and right frame contents.
- Press the "Off" for default frame contents.

SETUP

Language

Choose the multilingual OSD menu. Press ► into the sub menu and then use the ▲ or ▼ or ◄ or ► key to select your preferred language. Press “Enter” to finalize the selection.

NOTE

❖ Rear-Desktop and Rear-Ceiling are to be used with a translucent screen.

Projection

- Front-Projection

  This is the default selection. The image is projected straight on the screen.

- Rear-Desktop

  When selected, the image will appear reversed.

- Front-Ceiling

  When selected, the image will turn upside down.

- Rear-Ceiling

  When selected, the image will appear reversed in upside down position

Menu Location

Choose the menu location on the display screen.

Projector ID

ID definition can be set up by menu (range 0-99), and allow user control an individual projector by RS232. Refer to pages 60-63 for the complete list of RS232 commands.

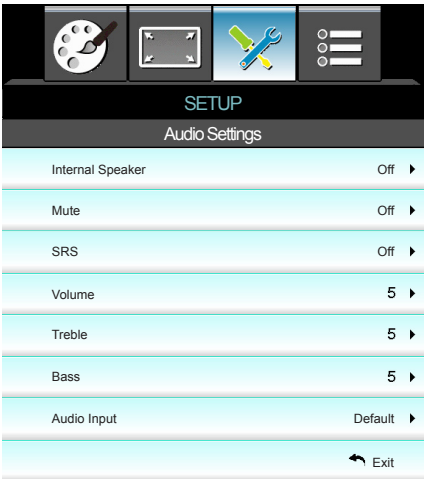

SETUP | Audio Settings

❖ "Mute" function affects both internal and external speaker volume.

Internal Speaker

Choose the "On" or "Off" to turn on or off the internal speaker.

Mute

- Choose the "On" to turn mute on.
- Choose the "Off" to turn mute off.

SRS

SRS audio processing analyses the audio input signal and optimizes it for the internal speakers to give you an enhanced experience.

- Choose the "On" to turn on SRS.
- Choose the "Off" to turn off SRS.

Volume

- Press the ◄ to decrease the volume.
- Press the ► to increase the volume.

Treble

- Press the ◄ to decrease the treble.
- Press the ► to increase the treble.

Bass

- Press the ◄ to decrease the bass.
- Press the ► to increase the bass.

❖ HDMI audio signals cannot be assigned to other image sources.

Audio Input

The default audio inputs are on the back panel of the projector. Use this option to reassign any of the Audio Inputs to the current image source.

- Audio1: VGA1 and VGA2.
- Audio2: Video.

SETUP | Security

Security

- On: Choose “On” to use security verification when the turning on the projector.
- Off: Choose “Off” to be able to switch on the projector without password verification.

Security Timer

Can be select the time (Month/Day/Hour) function to set the number of hours the projector can be used. Once this time has elapsed you will be requested to enter your password again.

Change Password

- First time:

1. Press “↵” to set the password.
2. The password has to be 4 digits.
3. Use number button on the remote to enter your new password and then press “↵” key to confirm your password.

- Change Password:
(If your remote does not have a number keypad, please use the up/down arrows to change each digit of the password, then press enter to confirm)

1. Press “↵” to input old password.
2. Use number button to enter current password and then press “↵” to confirm.
3. Enter new password (4 digits in length) using the number buttons on the remote, then press “↵” to confirm.
4. Enter new password again and press “↵” to confirm.

- If the incorrect password is entered 3 times, the projector will automatically shut down.
- If you have forgotten your password, please contact your local office for support.

NOTE

❖ Pass-code default value is “1234” (first time).

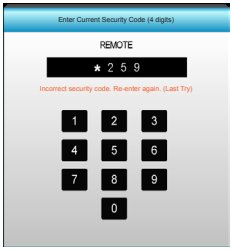

SETUP | Advanced

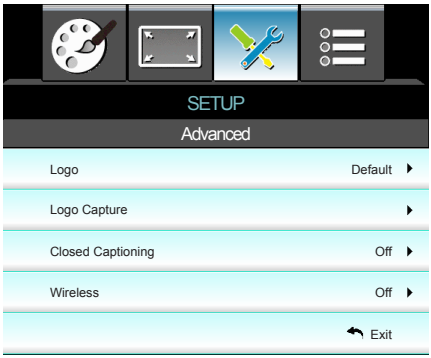

❖ "For a successful logo capture, ensure that the on-screen image does not exceed the projector native resolution. (1080p:1920x1080).

Logo

Use this function to set the desired startup screen. If changes are made they will take effect the next time the projector is powered on.

- Default: The default startup screen.
- Neutral: Logo is not displayed on startup screen.
- User: Use stored picture from "Logo Capture" function.

Logo Capture

Press ► to capture an image of the picture currently displayed on screen.

Closed Captioning

Use this function to set the desired startup screen. If changes are made they will take effect the next time the projector is powered on.

- Off: select "Off" to turn off the closed captioning feature.
- CC1:CC1 language: American English.
- CC2:CC2 language (depending on the TV channel of the user):Spanish, French, Portuguese, German, Danish.

❖ "Wireless" is only-functional with VGA connector.

❖ Wired VGA will not function and the projector maybe shut down if Wireless is turned on.

Wireless

Choose the "On" to turn on the Wireless.

OPTIONS

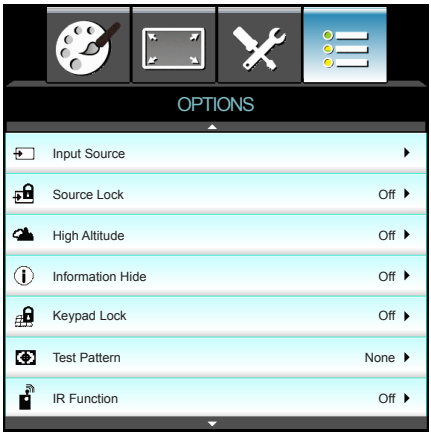

Input Source

Use this option to enable / disable input sources. Press ► to enter the sub menu and select which sources you require. Press “Enter” to finalize the selection. The projector will only search for inputs that are enabled.

Source Lock

- On: The projector will only search current input connection.
- Off: The projector will search for other signals if the current input signal is lost.

High Altitude

When “On” is selected, the fans will spin faster. This feature is useful in high altitude areas where the air is thin.

Information Hide

- On: Choose “On” to hide the info message.
- Off: Choose “Off” to show the “searching” message.

Keypad Lock

When the keypad lock function is “On”, the control panel will be locked however, the projector can be operated by the remote control. By selecting “Off”, you will be able to reuse the control panel.

Test Pattern

Display a test pattern. There are Grid, White pattern and None.

IR Function

When this function is “ON” , the projector can be operated by the remote control from IR receiver. By selecting “Off”, you will be able to use the control panel keys.

Background Color

Use this feature to display a “Black”, “Red”, “Blue”, “Green” or “White”, screen when no signal is available.

Reset

- Current: Choose “Yes” to return the display parameters on this menu to the factory default settings.
- All: Choose “Yes” to return the display parameters on all menus to the factory default settings.

OPTIONS | Lamp Settings

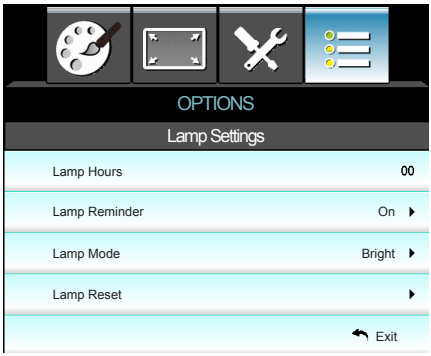

Note

- When ambient temperature is over 40°C in operating, the projector will switch to Eco automatically.
- "Lamp Mode" can be indipendently set for 2D and 3D.

Lamp Hours

Display the projection time.

Lamp Reminder

Choose this function to show or to hide the warning message when the changing lamp message is displayed.
The message will appear 30 hours before suggested replacement of lamp.

Lamp Mode

- Eco.: Choose "Eco." to dim the projector lamp which will lower power consumption and extend the lamp life.
- Bright: Choose "Bright" to increase the brightness.

Lamp Reset

Reset the lamp hour counter after replacing the lamp.

OPTIONS | Advanced

Direct Power On

Choose “On” to activate Direct Power mode. The projector will automatically power on when AC power is supplied, without pressing the “⏻” key on the projector control panel or on the remote control.

Auto Power Off (min)

Sets the countdown timer interval. The countdown timer will start, when there is no signal being sent to the projector. The projector will automatically power off when the countdown has finished (in minutes).

Sleep Timer (min)

Sets the countdown timer interval. The countdown timer will start, with or without a signal being sent to the projector. The projector will automatically power off when the countdown has finished (in minutes).

Power Mode (Standby)

- Eco.: Choose “Eco.” to save power dissipation further < 0.5W.
- Active: Choose “Active” to return to normal standby and the VGA out port will be enabled.

NOTE

- When Power mode (Standby) is set to Eco (<0.5W), the VGA output and Audio pass-through will be deactivated when the projector is in standby.
- The value of sleep timer will be reset to zero after the pro-jector power off.

Troubleshooting

If you experience a problem with your projector, please refer to the following information. If a problem persists, please contact your local reseller or service center.

Image Problems

No image appears on-screen

- Ensure all the cables and power connections are correctly and securely connected as described in the “Installation” section.
- Ensure the pins of connectors are not crooked or broken.
- Check if the projection lamp has been securely installed. Please refer to the “Replacing the Lamp” section.
- Make sure you have removed the lens cap and the projector is switched on.

Image is out of focus

- Make sure the Lens cap is removed.
- Adjust the Focus Ring on the projector lens.
- Make sure the projection screen is between the required distance from the projector. (refer to pages 21-22)

The image is stretched when displaying 16:9 DVD title

- When you play anamorphic DVD or 16:9 DVD, the projector will show the best image in 16: 9 format on projector side.
- If you play the LBX format DVD title, please change the format as LBX in projector OSD.
- If you play 4:3 format DVD title, please change the format as 4:3 in projector OSD.
- If the image is still stretched, you will also need to adjust the aspect ratio by referring to the following:
- Please setup the display format as 16:9 (wide) aspect ratio type on your DVD player.

Image is too small or too large

- Adjust the zoom lever on the top of the projector.
- Move the projector closer to or further from the screen.
- Press “Menu” on the projector panel, go to “Display-->Format”. Try the different settings.

Image has slanted sides:

- If possible, reposition the projector so that it is centered on the screen and below the bottom of the screen.
- Use “Display-->V Keystone” from the OSD to make an adjustment.

Image is reversed

- Select “Setup-->Projection” from the OSD and adjust the projection direction.

Blurry double image

- Press “3D Format” button and switch to “Off” to avoid normal 2D image is blurry double image.

Two images, side-by-side format

- Press “3D Format” button and switch to “SBS” for input signal is HDMI 1.3 2D 1080i side-by-side.

Image does not display in 3D

- Check if the battery of 3D glasses is drained.
- Check if the 3D glasses is turned on.
- When the input signal is HDMI 1.3 2D (1080i side-by-side half), press “3D Format” button and switch to “SBS”.

Other Problems

The projector stops responding to all controls

- If possible, turn off the projector, then unplug the power cord and wait at least 20 seconds before reconnecting power.

Lamp burns out or makes a popping sound

- When the lamp reaches its end of life, it will burn out and may make a loud popping sound. If this happens, the projector will not turn on until the lamp module has been replaced. To replace the lamp, follow the procedures in the “Replacing the Lamp” section.

Remote Control Problems

If the remote control does not work

- Check the operating angle of the remote control is within ±15° both horizontally and vertically of on of the IR receivers on the projector.
- Make sure there are not any obstructions between the remote control and the projector. Move to within 6 m (20 ft) of the projector.
- Make sure batteries are inserted correctly.
- Replace batteries if they are exhausted.

LED Lighting Messages

Message	⏻ ○ ON/STANDBY LED (Green/Amber)	Temp-LED (Red)	Lamp-LED (Red)
Standby State (Input power cord)	Amber	○	○
Power on (Warming)	Flashing Green	○	○
Lamp lighting	Green	○	○
Power off (Cooling)	Flashing Green	○	○
Error (Over Temp.)	Flashing Amber	☼	○
Error (Fan fail)	Flashing Amber	Flashing	○
Error (Lamp fail)	Flashing Amber	○	☼

NOTE

❖ Steady light ⇨ ☼
No light ⇨ ○

✻ ON/STANDBY LED be ON when OSD appears, be OFF when OSD disappears.

On Screen Messages

❖ Power off:

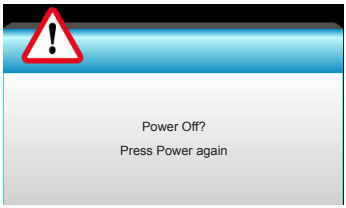

❖ Lamp warning:

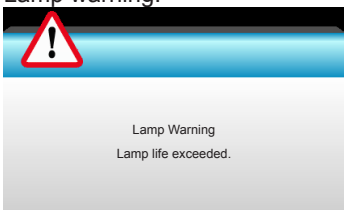

❖ Temperature warning:

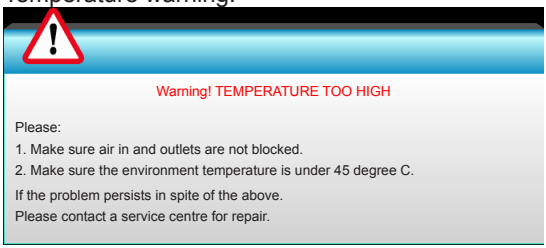

❖ Fan failed:

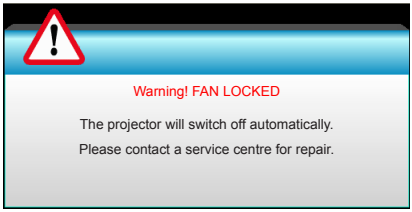

❖ Out of display range:

Replacing the Lamp

The projector automatically detects the lamp life. When the lamp life is nearing the end of use, you will receive a warning message.

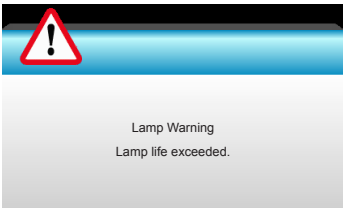

When you see this message, please contact your local reseller or service center to change the lamp as soon as possible. Make sure the projector has been cooled down for at least 30 minutes before changing the lamp.

Warning: If ceiling mounted, please use caution when opening the lamp access panel. It is recommended to wear safety glasses if changing the bulb when ceiling mounted. “Caution must be used to prevent any loose parts from falling out of projector.”

Warning: Lamp compartment is hot! Allow it to cool down before changing lamp!

Warning: To reduce the risk of personal injury, do not drop the lamp module or touch the lamp bulb. The bulb may shatter and cause injury if it is dropped.

NOTE

- The screws on the lamp cover and the lamp cannot be removed.
- The projector cannot be turned on if the lamp cover has not been placed back on the projector.
- Do not touch the glass area of the lamp. Hand oil can cause the lamp to shatter. Use a dry cloth to clean the lamp module if it was accidentally touched.

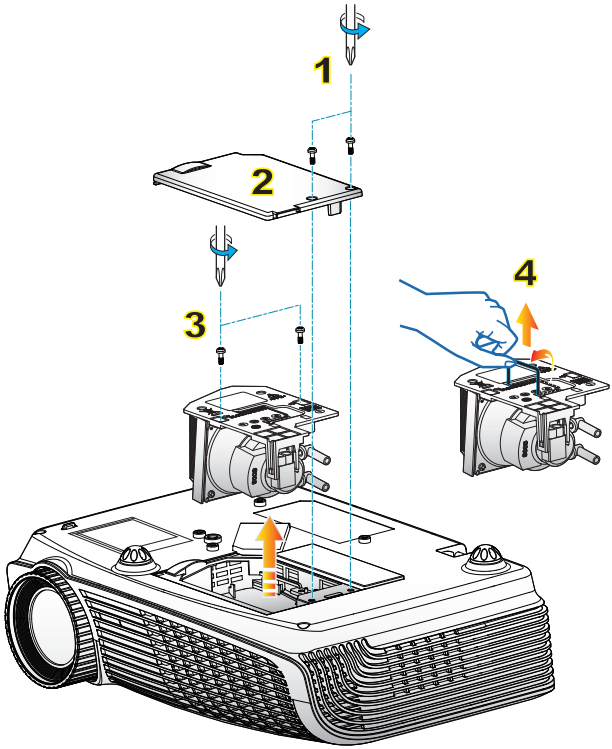

Lamp Replacement Procedure:

1. Switch off the power to the projector by pressing the "⏻" button.
2. Allow the projector to cool down for at least 30 minutes.
3. Disconnect the power cord.
4. Unscrew the two screws on the cover. 1
5. Lift up and remove the cover. 2
6. Unscrew the two screws on the lamp module. 3
7. Lift up the lamp handle and remove the lamp module slowly and carefully. 4

To replace the lamp module, reverse the previous steps.

8. Turn on the projector and use "Lamp Reset" after the lamp module is replaced.

Lamp Reset: (i) Press "Menu" → (ii) Select "OPTIONS" → (iii) Select "Lamp Settings" → (iv) Select "Lamp Reset" → (v) Select "Yes".

Compatibility Modes

❖ Computer/Video/HDMI/Mac Compatibility

Signal	Resolution	Refresh Rate (Hz)	Video	Analog	HDMI	Mac
NTSC	720 x 480	60	O	-	-	-
PAL/SECAM	720 x 576	50	O	-	-	-
VGA	640 x 480	60	-	O	O	O
	640 x 480	67	-	O	-	-
	640 x 480	72.8	-	O	-	O
	640 x 480	85	-	O	-	O
SVGA	800 x 600	56.3	-	O	-	-
	800 x 600	60.3 (*2)	-	O	O	O
	800 x 600	72.2	-	O	O	O
	800 x 600	85.1	-	O	O	O
	800 x 600	120 (*2)	-	O	O	-
XGA	1024 x 768	60 (*2)	-	O	O	O
	1024 x 768	70.1	-	O	O	O
	1024 x 768	75	-	O	O	O
	1024 x 768	85	-	O	O	O
	1024 x 768	120 (*2)	-	O	O	-
HDTV (720p)	1280 x 720	50	O	O	O	-
	1280 x 720	60	O	O	O	O
	1280 x 720	120 (*2)	-	O	O	-
WXGA	1280 x 768	60	-	O	O	O (*3)
	1280 x 768	75	-	O	O	O
	1280 x 768	85	-	O	O	O (*3)
	1280 x 800	60	-	O	O	O
	1366 x 768	60	-	O	O	O
WXGA+	1440 x 900	60	-	O	-	O (*3)
SXGA	1280 x 1024	60	-	O	O	O
	1280 x 1024	75	-	O	O	O
	1280 x 1024	85	-	O	O	-
SXGA+	1400 x 1050	60	-	O	O	-
UXGA	1600 x1200	60	-	O	O	-
HDTV (1080p)	1920 x 1080	24	O	O	O	-
	1920 x 1080	30	-	-	O	-
	1920 x 1080	50	O	O	O	-
	1920 x 1080	60	O	O	O	O
HDTV (1080i)	1920 x 1080	50	O	-	O	-
	1920 x 1080	60	O	-	O	-
WUXGA	1920 x 1200	60 (*1)	-	O	O	O

NOTE

- (*1) 1920 x1200 @60Hz only support RB (reduced blanking).
- (*2) 3D timing for True 3D projector.
- (*3) is not supported HDMI input singal for Mac.
- 120Hz input signals may be dependent on graphics cards support.

Signal	Resolution	Refresh Rate (Hz)	Video	Analog	HDMI	Mac
SDTV (576i)	768 x 576	50	O	-	O	-
SDTV (576p)	768 x 576	50	O	-	O	-
SDTV (480i)	640 x 480	60	O	-	O	-
SDTV (480p)	640 x 480	60	O	-	O	-

❖ 3D Input Video Compatibility

<table>
<tr><td rowspan="14">Input Resolution</td><td rowspan="8">HDMI 1.4a 3D Input</td><td colspan="3">Input Timing</td></tr>
<tr><td>1280 x 720p @ 50Hz</td><td colspan="2">Top-and-Bottom</td></tr>
<tr><td>1280 x 720p @ 60Hz</td><td colspan="2">Top-and-Bottom</td></tr>
<tr><td>1280 x 720p @ 50Hz</td><td colspan="2">Frame packing</td></tr>
<tr><td>1280 x 720p @ 60Hz</td><td colspan="2">Frame packing</td></tr>
<tr><td>1920 x 1080i @ 50 Hz</td><td colspan="2">Side-by-Side (Half)</td></tr>
<tr><td>1920 x 1080i @ 60 Hz</td><td colspan="2">Side-by-Side (Half)</td></tr>
<tr><td>1920 x 1080p @ 24 Hz</td><td colspan="2">Top-and-Bottom</td></tr>
<tr><td>1920 x 1080p @ 24 Hz</td><td colspan="2">Frame packing</td></tr>
<tr><td rowspan="6">HDMI 1.3 3D Content</td><td>1920 x 1080i @ 50Hz</td><td rowspan="4">Side-by-Side (Half)</td><td rowspan="4">While 3D Format is “SBS”</td></tr>
<tr><td>1920 x 1080i @ 60Hz</td></tr>
<tr><td>1280 x 720p @ 50Hz</td></tr>
<tr><td>1280 x 720p @ 60Hz</td></tr>
<tr><td>1920 x 1080i @ 50Hz</td><td rowspan="4">Top-and-Bottom</td><td rowspan="4">While 3D Format is “Top and Bottom”</td></tr>
<tr><td>1920 x 1080i @ 60Hz</td></tr>
<tr><td>1280 x 720p @ 50Hz</td></tr>
<tr><td>1280 x 720p @ 60Hz</td></tr>
<tr><td>480i</td><td>HQFS</td><td>While 3D Format is “Frame sequential”</td></tr>
</table>

RS232 Commands and Protocol Function List

RS232 Pin Assignments

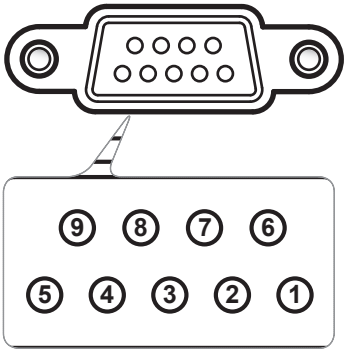

Pin no.	Spec. (from projector side)
1	N/A
2	RXD
3	TXD
4	N/A
5	GND
6	N/A
7	N/A
8	N/A
9	N/A

RS232 Protocol Function List

- There is a <CR> after all ASCII commands.
- 0D is the HEX code for <CR> in ASCII code.

Baud Rate : 9600
Data Bits: 8
Parity: None
Stop Bits: 1
Flow Control : None
UART16550 FIFO: Disable
Projector Return (Pass): P
Projector Return (Fail): F

XX=00-99, projector's ID,
XX=00 is for all projectors

SEND to projector

232 ASCII Code	HEX Code	Function	Description	
~XX00 1	7E 30 30 30 30 20 31 0D	Power ON		
~XX00 0	7E 30 30 30 30 20 30 0D	Power OFF	(0/2 for backward compatible)	
~XX00 1 ~nnnn	7E 30 30 30 30 20 31 20 a 0D	Power ON with Password	~nnnn = ~0000 (a=7E 30 30 30 30) ~9999 (a=7E 39 39 39 39)	
~XX01 1	7E 30 30 30 31 20 31 0D	Resync		
~XX02 1	7E 30 30 30 32 20 31 0D	AV Mute	On	
~XX02 0	7E 30 30 30 32 20 30 0D		Off (0/2 for backward compatible)	
~XX03 1	7E 30 30 30 33 20 31 0D	Mute	On	
~XX03 0	7E 30 30 30 33 20 30 0D		Off (0/2 for backward compatible)	
~XX04 1	7E 30 30 30 34 20 31 0D	Freeze		
~XX04 0	7E 30 30 30 34 20 30 0D	Unfreeze	(0/2 for backward compatible)	
~XX05 1	7E 30 30 30 35 20 31 0D	Zoom Plus		
~XX06 1	7E 30 30 30 36 20 31 0D	Zoom Minus		
~XX12 1	7E 30 30 31 32 20 31 0D	Direct Source Commands	HDMI1	
~XX12 15	7E 30 30 31 32 20 31 35 0D		HDMI2	
~XX12 5	7E 30 30 31 32 20 35 0D		VGA1	
~XX12 6	7E 30 30 31 32 20 36 0D		VGA 2	
~XX12 10	7E 30 30 31 32 20 31 30 0D		Video	
~XX20 1	7E 30 30 32 30 20 31 0D	Display Mode	Cinema	
~XX20 4	7E 30 30 32 30 20 34 0D		Reference	
~XX20 3	7E 30 30 32 30 20 33 0D		Photo	
~XX20 2	7E 30 30 32 30 20 32 0D		Bright	
~XX20 9	7E 30 30 32 30 20 39 0D		3D	
~XX20 5	7E 30 30 32 30 20 35 0D		User	
~XX21 n	7E 30 30 32 31 20 a 0D	Brightness	n = -50 (a=2D 35 30) ~ 50 (a=35 30)	
~XX22 n	7E 30 30 32 32 20 a 0D	Contrast	n = -50 (a=2D 35 30) ~ 50 (a=35 30)	
~XX23 n	7E 30 30 32 33 20 a 0D	Sharpness	n = 1 (a=31) ~ 15 (a=31 35)	
~XX24 n	7E 30 30 32 34 20 a 0D	Color Settings/White	Red	n = -50 (a=2D 35 30) ~ 50 (a=35 30)
~XX25 n	7E 30 30 32 35 20 a 0D		Green	n = -50 (a=2D 35 30) ~ 50 (a=35 30)
~XX26 n	7E 30 30 32 36 20 a 0D		Blue	n = -50 (a=2D 35 30) ~ 50 (a=35 30)
~XX33 1	7E 30 30 33 33 20 31 0D		Reset	
~XX34 n	7E 30 30 33 34 20 a 0D	BrilliantColor™		n = 1 (a=30) ~ 10 (a=31 30)
~XX191 0	7E 30 30 31 39 31 20 30 0D	Dynamic Black	Off	
~XX191 1	7E 30 30 31 39 31 20 31 0D		Low	
~XX191 2	7E 30 30 31 39 31 20 32 0D		High	
~XX35 1	7E 30 30 33 35 20 31 0D	Gamma	Film	
~XX35 2	7E 30 30 33 35 20 32 0D		Video	
~XX35 3	7E 30 30 33 35 20 33 0D		Graphics	
~XX35 4	7E 30 30 33 35 20 34 0D		Standard	
~XX36 1	7E 30 30 33 36 20 31 0D	Color Temp.	Warm	
~XX36 2	7E 30 30 33 36 20 32 0D		Medium	
~XX36 3	7E 30 30 33 36 20 33 0D		Cold	
~XX37 1	7E 30 30 33 37 20 31 0D	Color Space	Auto	
~XX37 2	7E 30 30 33 37 20 32 0D		RGB\ RGB(0-255)	
~XX37 3	7E 30 30 33 37 20 33 0D		YUV	
~XX37 4	7E 30 30 33 37 20 34 0D		RGB(16 - 235)	
~XX73 n	7E 30 30 37 33 20 a 0D	Signal	Frequency	n = -5 (a=2D 35) ~ 5 (a=35) By signal
~XX91 n	7E 30 30 39 31 20 a 0D		Automatic	n = 0 disable; n = 1 enable
~XX74 n	7E 30 30 37 34 20 a 0D		Phase	n = 0 (a=30) ~ 31 (a=33 31) By signal
~XX75 n	7E 30 30 37 35 20 a 0D		H. Position	n = -5 (a=2D 35) ~ 5 (a=35) By timing
~XX76 n	7E 30 30 37 36 20 a 0D		V. Position	n = -5 (a=2D 35) ~ 5 (a=35) By timing

~XX200 n	7E 30 30 32 30 30 20 a 0D		White Level	n = -50 (a=2D 35 30) ~ 50 (a=35 30)
~XX201 n	7E 30 30 32 30 31 20 a 0D		Black Level	n = -50 (a=2D 35 30) ~ 50 (a=35 30)
~XX202 n	7E 30 30 32 30 32 20 a 0D		Saturation	n = -50 (a=2D 35 30) ~ 50 (a=35 30)
~XX203 n	7E 30 30 32 30 33 20 a 0D		Hue	n = -50 (a=2D 35 30) ~ 50 (a=35 30)
~XX45 n	7E 30 30 34 34 20 a 0D	Color (Saturation)	n = -50 (a=2D 35 30) ~ 50 (a=35 30)	
~XX44 n	7E 30 30 34 35 20 a 0D	Tint	n = -50 (a=2D 35 30) ~ 50 (a=35 30)	
~XX60 1	7E 30 30 36 30 20 31 0D	Format	4:3	
~XX60 2	7E 30 30 36 30 20 32 0D		16:9	
~XX60 5	7E 30 30 36 30 20 35 0D		LBX	
~XX60 6	7E 30 30 36 30 20 36 0D		Native	
~XX60 7	7E 30 30 36 30 20 37 0D		Auto	
~XX60 9	7E 30 30 36 30 20 39 0D		Superwide	
~XX61 n	7E 30 30 36 31 20 a 0D	Edge mask	n = 0 (a=30) ~ 10 (a=31 30)	
~XX62 n	7E 30 30 36 32 20 a 0D	Zoom	n = -5 (a=30) ~ 25 (a=32 35)	
~XX63 n	7E 30 30 36 33 20 a 0D	H Image Shift	n = -100 (a=2D 31 30 30) ~ 100 (a=31 30 30)	
~XX64 n	7E 30 30 36 34 20 a 0D	V Image Shift	n = -100 (a=2D 31 30 30) ~ 100 (a=31 30 30)	
~XX66 n	7E 30 30 36 36 20 a 0D	V Keystone	n = -40 (a=2D 34 30) ~ 40 (a=34 30)	
~XX230 1	7E 30 30 32 33 30 20 31 0D	3D Mode	DLP-Link	
~XX230 3	7E 30 30 32 33 30 20 31 0D	3D Mode	IR	
~XX400 0	7E 30 30 34 30 30 20 30 0D	3D→2D	3D	
~XX400 1	7E 30 30 34 30 30 20 31 0D		L	
~XX400 2	7E 30 30 34 30 30 20 32 0D		R	
~XX405 0	7E 30 30 34 30 35 20 30 0D	3D Format	Auto	
~XX405 1	7E 30 30 34 30 35 20 31 0D		SBS	
~XX405 2	7E 30 30 34 30 35 20 32 0D		Top and Bottom	
~XX405 3	7E 30 30 34 30 35 20 33 0D		Frame sequential	
~XX231 0	7E 30 30 32 33 31 20 30 0D	3D Sync Invert	On	
~XX231 1	7E 30 30 32 33 31 20 31 0D	3D Sync Invert	Off	
~XX70 1	7E 30 30 37 30 20 31 0D	Language	English	
~XX70 2	7E 30 30 37 30 20 32 0D		German	
~XX70 3	7E 30 30 37 30 20 33 0D		French	
~XX70 4	7E 30 30 37 30 20 34 0D		Italian	
~XX70 5	7E 30 30 37 30 20 35 0D		Spanish	
~XX70 6	7E 30 30 37 30 20 36 0D		Portuguese	
~XX70 7	7E 30 30 37 30 20 37 0D		Polish	
~XX70 8	7E 30 30 37 30 20 38 0D		Dutch	
~XX70 9	7E 30 30 37 30 20 39 0D		Swedish	
~XX70 10	7E 30 30 37 30 20 31 30 0D		Norwegian/Danish	
~XX70 11	7E 30 30 37 30 20 31 31 0D		Finnish	
~XX70 12	7E 30 30 37 30 20 31 32 0D		Greek	
~XX70 13	7E 30 30 37 30 20 31 33 0D		Traditional Chinese	
~XX70 14	7E 30 30 37 30 20 31 34 0D		Simplified Chinese	
~XX70 15	7E 30 30 37 30 20 31 35 0D		Japanese	
~XX70 16	7E 30 30 37 30 20 31 36 0D		Korean	
~XX70 17	7E 30 30 37 30 20 31 37 0D		Russian	
~XX70 18	7E 30 30 37 30 20 31 38 0D		Hungarian	
~XX70 19	7E 30 30 37 30 20 31 39 0D		Czechoslovak	
~XX70 20	7E 30 30 37 30 20 32 30 0D		Arabic	
~XX70 21	7E 30 30 37 30 20 32 31 0D		Thai	
~XX70 22	7E 30 30 37 30 20 32 32 0D		Turkish	
~XX70 23	7E 30 30 37 30 20 32 33 0D		Farsi	
~XX70 25	7E 30 30 37 30 20 32 33 0D		Vietnamese	
~XX70 26	7E 30 30 37 30 20 32 33 0D		Indonesian	
~XX70 27	7E 30 30 37 30 20 32 33 0D		Romanian	
~XX71 1	7E 30 30 37 31 20 31 0D	Projection	Front-Desktop	
~XX71 2	7E 30 30 37 31 20 32 0D		Rear-Desktop	
~XX71 3	7E 30 30 37 31 20 33 0D		Front-Ceiling	
~XX71 4	7E 30 30 37 31 20 34 0D		Rear-Ceiling	
~XX72 1	7E 30 30 37 32 20 31 0D	Menu Location	Top Left	
~XX72 2	7E 30 30 37 32 20 32 0D		Top Right	
~XX72 3	7E 30 30 37 32 20 33 0D		Centre	
~XX72 4	7E 30 30 37 32 20 34 0D		Bottom Left	
~XX72 5	7E 30 30 37 32 20 35 0D		Bottom Right	
~XX77 n	7E 30 30 37 37 20 aabbcc 0D	Security	Security Timer	Month/Day/Hour n = mm/dd/hh mm = 00 (aa=30 30) ~ 12 (aa=31 32) dd = 00 (bb=30 30) ~ 30 (bb=33 30) hh = 00 (cc=30 30) ~ 24 (cc=32 34)
~XX78 1	7E 30 30 37 38 20 31 0D		Security Settings	Enable
~XX78 0	7E 30 30 37 38 20 32 0D			Disable(0/2 for backward compatible)
~XX79 n	7E 30 30 37 39 20 a 0D	Projector ID		n = 00 (a=30 30) ~ 99 (a=39 39)
~XX80 1	7E 30 30 38 30 20 31 0D	Mute	On	
~XX80 0	7E 30 30 38 30 20 30 0D		Off (0/2 for backward compatible)	
~XX310 0	7E 30 33 31 30 20 30 0D	Internal Speaker	Off	
~XX310 1	7E 30 33 31 30 20 31 0D		On	
~XX81 n	7E 30 30 38 31 20 a 0D	Volume(Audio)		n = 0 (a=30) ~ 10 (a=31 30)
~XX94 0	7E 30 30 39 34 20 30 0D	SRS	Off	
~XX94 1	7E 30 30 39 34 20 31 0D		On	

~XX95 n	7E 30 30 39 35 20 a 0D	Treble		n = 0 (a=30) ~ 10 (a=31 30)
~XX96 n	7E 30 30 39 36 20 a 0D	Bass		n = 0 (a=30) ~ 10 (a=31 30)
~XX89 0	7E 30 30 38 39 20 30 0D	Audio Input	Default	
~XX89 1	7E 30 30 38 39 20 31 0D		Audio1	
~XX89 3	7E 30 30 38 39 20 33 0D		Audio2	
~XX82 1	7E 30 30 38 32 20 31 0D	Logo	Default	
~XX82 2	7E 30 30 38 32 20 32 0D		User	
~XX82 3	7E 30 30 38 32 20 33 0D		Neutral	
~XX83 1	7E 30 30 38 33 20 31 0D	Logo Capture		
~XX88 0	7E 30 30 38 38 20 30 0D	Closed Captioning	Off	
~XX88 1	7E 30 30 38 38 20 31 0D		cc1	
~XX88 2	7E 30 30 38 38 20 32 0D		cc2	
~XX100 1	7E 30 30 31 30 30 20 31 0D	Source Lock	On	
~XX100 0	7E 30 30 31 30 30 20 30 0D		Off (0/2 for backward compatible)	
~XX101 1	7E 30 30 31 30 31 20 31 0D	High Altitude	On	
~XX101 0	7E 30 30 31 30 31 20 30 0D		Off (0/2 for backward compatible)	
~XX102 1	7E 30 30 31 30 32 20 31 0D	Information Hide	On	
~XX102 0	7E 30 30 31 30 32 20 30 0D		Off (0/2 for backward compatible)	
~XX103 1	7E 30 30 31 30 33 20 31 0D	Keypad Lock	On	
~XX103 0	7E 30 30 31 30 33 20 30 0D		Off (0/2 for backward compatible)	
~XX195 0	7E 30 30 31 39 35 20 30 0D	Test Pattern	None	
~XX195 1	7E 30 30 31 39 35 20 31 0D		Grid	
~XX195 2	7E 30 30 31 39 35 20 32 0D		White Pattern	
~XX11 0	7E 30 30 31 31 20 30 0D	IR Function	Off	
~XX11 1	7E 30 30 31 31 20 31 0D		On	
~XX104 1	7E 30 30 31 30 34 20 31 0D	Background Color	Blue	
~XX104 2	7E 30 30 31 30 34 20 32 0D		Black	
~XX104 3	7E 30 30 31 30 34 20 33 0D		Red	
~XX104 4	7E 30 30 31 30 34 20 34 0D		Green	
~XX104 5	7E 30 30 31 30 34 20 35 0D		White	
~XX105 1	7E 30 30 31 30 35 20 31 0D	Advanced	Direct Power On	On
~XX105 0	7E 30 30 31 30 35 20 30 0D			Off (0/2 for backward compatible)
~XX106 n	7E 30 30 31 30 36 20 a 0D		Auto Power Off (min)	n = 0 (a=30) ~ 180 (a=31 38 30) (5 minutes for each step).
~XX107 n	7E 30 30 31 30 37 20 a 0D		Sleep Timer (min)	n = 0 (a=30) ~ 995 (a=39 39 30) (30 minutes for each step).
~XX114 1	7E 30 30 31 31 34 20 31 0D		Power Mode(Standby)	Eco.(<=0.5W)
~XX114 0	7E 30 30 31 31 34 20 30 0D			Active (0/2 for backward compatible)
~XX109 1	7E 30 30 31 30 39 20 31 0D		Lamp Reminder	On
~XX109 0	7E 30 30 31 30 39 20 30 0D			Off (0/2 for backward compatible)
~XX110 1	7E 30 30 31 31 30 20 31 0D		Lamp Mode	Bright
~XX110 2	7E 30 30 31 31 30 20 32 0D			Eco
~XX111 1	7E 30 30 31 31 31 20 31 0D		Lamp Reset	Yes
~XX111 0	7E 30 30 31 31 31 20 30 0D			No (0/2 for backward compatible)
~XX112 1	7E 30 30 31 31 32 20 31 0D	Reset all		Yes
~XX112 2	7E 30 30 31 31 32 20 32 0D			Cancel
~XX99 1	7E 30 30 39 39 20 31 0D	RS232 Alert Reset	Reset System Alert	(MCU)
~XX210 n	7E 30 30 32 30 30 20 n 0D	Display message on the OSD		n: 1-30 characters

SEND to emulate Remote

~XX140 10	7E 30 30 31 34 30 20 31 30 0D		Up
~XX140 11	7E 30 30 31 34 30 20 31 31 0D		Left
~XX140 12	7E 30 30 31 34 30 20 31 32 0D		Enter (for projection MENU)
~XX140 13	7E 30 30 31 34 30 20 31 33 0D		Right
~XX140 14	7E 30 30 31 34 30 20 31 34 0D		Down
~XX140 15	7E 30 30 31 34 30 20 31 35 0D		Keystone +
~XX140 16	7E 30 30 31 34 30 20 31 36 0D		Keystone –
~XX140 17	7E 30 30 31 34 30 20 31 37 0D		Volume –
~XX140 18	7E 30 30 31 34 30 20 31 38 0D		Volume +
~XX140 19	7E 30 30 31 34 30 20 31 39 0D		Brightness
~XX140 20	7E 30 30 31 34 30 20 32 30 0D		Menu
~XX140 21	7E 30 30 31 34 30 20 32 31 0D		Zoom
~XX140 28	7E 30 30 31 34 30 20 32 38 0D		Contrast

SEND from projector automatically

232 ASCII Code	HEX Code	Function	Projector Return	Description
		System status	INFOn	n : 0/1/2/3/4/6/7/8 = Standby/Warming/Cooling/Out of Range/ Lamp fail/Fan Lock/Over Temperature/Lamp Hours Running Out

READ from projector

232 ASCII Code	HEX Code	Function	Projector Return	Description
~XX121 1	7E 30 30 31 32 31 20 31 0D	Input Source Commands	OKn	n : n: 0/1/2/3/4/5 = None/VGA1/VGA2/Video/HDMI1/HDMI2
~XX122 1	7E 30 30 31 32 32 20 31 0D	Software Version	OKdddd	dddd: FW version
~XX123 1	7E 30 30 31 32 33 20 31 0D	Display Mode	OKn	n : 0/1/2/3/4/5/6= None/Cinema/Reference/Photo/Bright/3D/User
~XX124 1	7E 30 30 31 32 34 20 31 0D	Power State	OKn	n : 0/1 = Off/On
~XX125 1	7E 30 30 31 32 35 20 31 0D	Brightness	OKn	
~XX126 1	7E 30 30 31 32 36 20 31 0D	Contrast	OKn	
~XX127 1	7E 30 30 31 32 37 20 31 0D	Aspect Ratio	OKn	n: 0/1/2/3/4 = 4:3/16:9/LBX/Native/AUTO
~XX128 1	7E 30 30 31 32 38 20 31 0D	Color Temperature	OKn	n : 0/1/2 = Warm/Medium/Cold
~XX129 1	7E 30 30 31 32 39 20 31 0D	Projection Mode	OKn	n : 0/1/2/3 = Front-Desktop/Rear-Desktop/Front-Ceiling/Rear-Ceiling
~XX150 1	7E 30 30 31 35 30 20 31 0D	Information	OKabbbbccddddde	a : 0/1 = Off/On bbbb: LampHour cc: source n: 00/01/02/03/04/05 = None/VGA1/VGA2/Video/HDMI1/HDMI2/ dddd: FW version e : Display mode 0/1/2/3/4/5/6 None/Cinema/Reference/Photo/Bright/3D/User
~XX151 1	7E 30 30 31 35 31 20 31 0D	Model name	OKn	n:1=HD25; n: 2=HD25LV
~XX108 1	7E 30 30 31 30 38 20 31 0D	Lamp Hours	OKbbbbb	bbbb: LampHour
~XX108 2	7E 30 30 31 30 38 20 31 0D	Cumulative Lamp Hours	OKbbbbb	bbbbb: (5 digits) Total Lamp Hours

Ceiling Mount Installation

1. To prevent damage to your projector, please use the Optoma ceiling mount.
1. If you wish to use a third party ceiling mount kit, please ensure the screws used to attach a mount to the projector meet the following specifications:
   - Screw type: M3*3
   - Maximum screw length: 10mm
   - Minimum screw length: 7.5mm

NOTE

❖ Please note that damage resulting from incorrect installation will void the warranty.

NOTE

⚠ Warning:

1. If you buy a ceiling mount from another company, please be sure to use the correct screw size. Screw size will vary depending on the thickness of the mounting plate.
2. Be sure to keep at least 10 cm gap between the ceiling and the bottom of the projector.
3. Avoid installing the projector near a heat source.

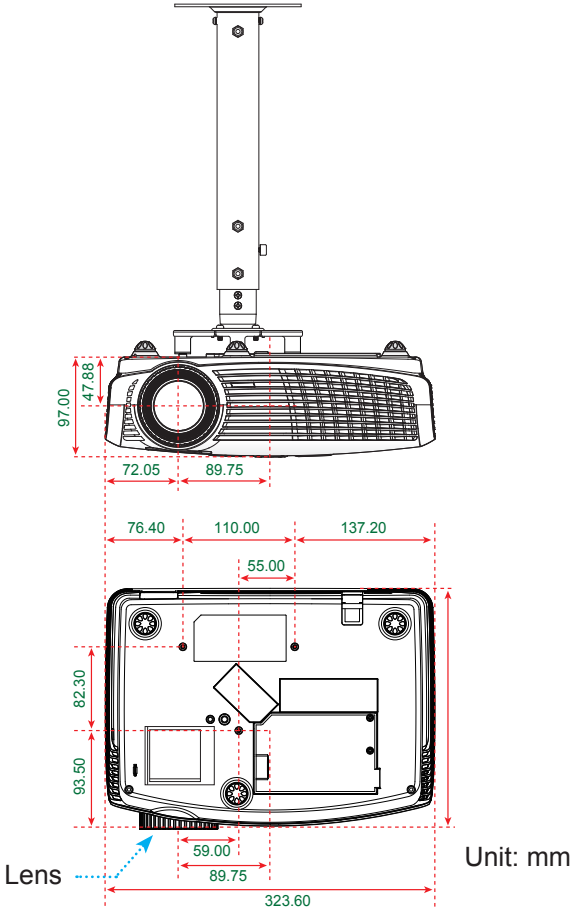

Optoma Global Offices

For service or support please contact your local office.

USA

3178 Laurelview Ct.
Fremont, CA 94538, USA
www.optomausa.com

888-289-6786
510-897-8601
services@optoma.com

Canada

2420 Meadowpine Blvd., Suite #105
Mississauga, ON, L5N 6S2, Canada
www.optoma.ca

888-289-6786
510-897-8601
services@optoma.com

Latin America

3178 Laurelview Ct.
Fremont, CA 94538, USA
www.optomausa.com

888-289-6786
510-897-8601
services@optoma.com

Europe

42 Caxton Way, The Watford Business Park Watford, Hertfordshire, WD18 8QZ, UK
www.optoma.eu
Service Tel: +44 (0)1923 691865

+44 (0) 1923 691 800
+44 (0) 1923 691 888
service@tsc-europe.com

Benelux BV

Randstad 22-123
1316 BW Almere
The Netherlands
www.optoma.nl

+31 (0) 36 820 0253
+31 (0) 36 548 9052

France

Bâtiment E
81-83 avenue Edouard Vaillant
92100 Boulogne Billancourt, France

+33 1 41 46 12 20
+33 1 41 46 94 35
savoptoma@optoma.fr

Spain

C/ José Hierro,36 Of. 1C 28522
Rivas VaciaMadrid,
Spain

+34 91 499 06 06
+34 91 670 08 32

Deutschland

Wiesenstrasse 21 W
D40549 Düsseldorf,
Germany

+49 (0) 211 506 6670
+49 (0) 211 506 66799
info@optoma.de

Scandinavia

Lerpeveien 25
3040 Drammen
Norway

+47 32 98 89 90
+47 32 98 89 99
info@optoma.no

PO.BOX 9515
3038 Drammen
Norway

Korea

WOOMI TECH.CO.,LTD.
4F, Minu Bldg. 33-14, Kangnam-Ku,
seoul,135-815, KOREA

+82+2+34430004
+82+2+34430005

Japan

東京都足立区綾瀬3-25-18
株式会社オーエスエム
サポートセンター: 0120-46-5040

info@osscreen.com
www.os-worldwide.com

Taiwan

12F., No.215,Sec. 3, Beixin Rd.,
Xindian Dist., New Taipei City 231,
Taiwan, R.O.C.
www.optoma.com.tw

+886-2-8911-8600
+886-2-8911-6590
services@optoma.com.tw
asia.optoma.com

Hong Kong

Unit A, 27/F Dragon Centre,
79 Wing Hong Street,
Cheung Sha Wan,
Kowloon, Hong Kong

+852-2396-8968
+852-2370-1222
www.optoma.com.hk

China

5F, No. 1205, Kaixuan Rd.,
Changning District
Shanghai, 200052, China

+86-21-62947376
+86-21-62947375
www.optoma.com.cn

Regulation & Safety Notices

This appendix lists the general notices of your projector.

FCC Notice

This device has been tested and found to comply with the limits for a Class B digital device pursuant to Part 15 of the FCC rules. These limits are designed to provide reasonable protection against harmful interference in a residential installation. This device generates, uses and can radiate radio frequency energy and, if not installed and used in accordance with the instructions, may cause harmful interference to radio communications.

However, there is no guarantee that interference will not occur in a particular installation. If this device does cause harmful interference to radio or television reception, which can be determined by turning the device off and on, the user is encouraged to try to correct the interference by one or more of the following measures:

- ❖ Reorient or relocate the receiving antenna.
- ❖ Increase the separation between the device and receiver.
- ❖ Connect the device into an outlet on a circuit different from that to which the receiver is connected.
- ❖ Consult the dealer or an experienced radio/television technician for help.

Notice: Shielded cables

All connections to other computing devices must be made using shielded cables to maintain compliance with FCC regulations.

Caution

Changes or modifications not expressly approved by the manufacturer could void the user's authority, which is granted by the Federal Communications Commission, to operate this projector.

Operation Conditions

This device complies with Part 15 of the FCC Rules. Operation is subject to the following two conditions:

1. This device may not cause harmful interference and
2. This device must accept any interference received, including interference that may cause undesired operation.

Notice: Canadian users

This Class B digital apparatus complies with Canadian ICES-003.

Remarque à l'intention des utilisateurs canadiens

Cet appareil numerique de la classe B est conforme a la norme NMB-003 du Canada.

Declaration of Conformity for EU countries

- EMC Directive 2004/108/EC (including amendments)
- Low Voltage Directive 2006/95/EC
- R & TTE Directive 1999/5/EC (if product has RF function)

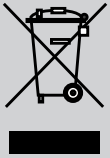

Disposal instructions
Do not throw this electronic device into the trash when discarding. To minimize pollution and ensure utmost protection of the global environment, please recycle it.

Trademarks

- DLP is trademarks of Texas Instruments.
- IBM is a trademark or registered trademark of International Business Machines Corporation.
- Macintosh, Mac OS X, iMac, and PowerBook are trademarks of Apple Inc., registered in the U.S. and other countries.
- Microsoft, Windows, Windows Vista, Internet Explorer and PowerPoint are either a registered trademark or trademark of Microsoft Corporation in the United States and/or other countries.
- HDMI, the HDMI Logo and High-Definition Multimedia Interface are trademarks or registered trademarks of HDMI Licensing LLC.
- SRS, is a trademark of SRS Labs, Inc. WOW HD technology is incorporated under license from SRS Labs, Inc.
- WOW HD™ significantly improves the playback quality of audio, delivering a dynamic 3D entertainment experience with deep, rich bass and high frequency clarity for crisp detail.
- Other product and company names mentioned in this user's manual may be the trademarks or registered trademarks of their respective holders.