NEC

DLP Cinema® Projector

User's Manual

DLP Cinema® Projector

NC3200S

Lamp Power Supply Unit

NC-32PS01

NEC Display Solutions, Ltd.

Important Information

Precautions: Please read this manual carefully before using your **NC3200S/NC-32PS01** and keep the manual handy for future reference.
The NC3200S (projector unit) is called the “projector”, and the NC-32PS01 (lamp power supply unit) is called the “lamp power supply” in this manual.

WARNING

TO PREVENT FIRE OR SHOCK HAZARDS, DO NOT EXPOSE THIS UNIT TO RAIN OR MOISTURE. ALSO DO NOT USE THIS UNIT S POLARIZED PLUG WITH AN EXTENSION CORD RECEPTACLE OR OTHER OUTLETS, UNLESS THE PRONGS CAN BE FULLY INSERTED. REFRAIN FROM OPENING THE CABINET AS THERE ARE HIGH-VOLTAGE COMPONENTS INSIDE. REFER SERVICING TO QUALIFIED SERVICE PERSONNEL.

CAUTION

RISK OF ELECTRIC SHOCK
DO NOT OPEN

CAUTION

TO REDUCE THE RISK OF ELECTRIC SHOCK, DO NOT OPEN COVER. NO USER-SERVICEABLE PARTS INSIDE. REFER SERVICING TO QUALIFIED SERVICE PERSONNEL.

This symbol warns the user that uninsulated voltage within the unit may have sufficient magnitude to cause electric shock. Therefore, it is dangerous to make any kind of contact with any part inside of this unit.

This symbol alerts the user that important literature concerning the operation and maintenance of this unit has been included. Therefore, it should be read carefully in order to avoid any problems.

DOC compliance Notice

This Class A digital apparatus meets all requirements of the Canadian Interference-Causing Equipment Regulations.

WARNING

This is a Class A product. In a domestic environment this product may cause radio interference in which case the user may be required to take adequate measures.

CAUTION

- In order to reduce any interference with radio and television reception use a signal cable with ferrite core attached.
  Use of signal cables without a ferrite core attached may cause interference with radio and television reception.
- This equipment has been tested and found to comply with the limits for a Class A digital device, pursuant to Part 15 of the FCC Rules. These limits are designed to provide reasonable protection against harmful interference when the equipment is operated in a commercial environment. This equipment generates, uses, and can radiate radio frequency energy and, if not installed and used in accordance with the installation manual, may cause harmful interference to radio communications.
  Operation of this equipment in a residential area is likely to cause harmful interference in which case the user will be required to correct the interference at his own expense.

Important Safeguards

These safety instructions are to ensure the long life of your projector and to prevent fire and shock. Please read them carefully and heed all warnings.

Installation

1. Place the projector on a flat, level surface in a dry area away from dust and moisture. Tilting the front of the projector up or down from level could reduce lamp life.
   Do not put the projector on its side when the lamp is on.
   Doing so may cause damage to the projector.
2. Do not place the projector in direct sunlight, near heaters or heat radiating appliances.
3. Exposure to direct sunlight, smoke or steam could harm internal components.
4. Handle your projector carefully. Dropping or jarring your projector could damage internal components.
5. To carry the projector, a minimum of five persons are required.
   Do not hold the lens part and the anamorphic lens part (or the wide converter lens part) with your hand. Otherwise the projector may tumble or drop, causing personal injury.
6. Do not place heavy objects on top of the projector.

Power Supply

1. The projector is so designed that it operates with the power supply voltage described below.
   - Projection Head : 0.7 kW 7A AC100-240V 50/60Hz Single-phase
   - Lamp Power Supply : 9.7 kW 28A AC200-230V 50/60Hz Three-phase (Star connection),
     9.7 kW 17A AC380-415V 50/60Hz Three-phase (Star connection)

   Ensure that your power supply fits this requirement before attempting to use your projector.
2. Consult your dealer for installing the power cable to the projector. DO NOT install the power cable by yourself. Doing so may cause a fire or electric shock.
3. Handle the power cable carefully and avoid excessive bending. Do not place any heavy objects on the power cable. A damaged cable can cause electric shock or fire.
4. If the projector will not be used for an extended period of time, shut down AC power.
5. Placing the power cable and the signal cable closely to each other can cause beat noise. If this happens, keep the two separated so that beat noise is not generated.
   Beat noise is corruption of the picture often seen as a rolling band moving through the image.
6. Do not touch the projector during a thunder storm. Doing so can cause electrical shock or fire.

Cleaning

1. Shut down AC power to the projection head and the lamp power supply before cleaning.
2. Clean the cabinet periodically with a damp cloth. If heavily soiled, use a mild detergent. Never use strong detergents or solvents such as alcohol or thinner.
3. Use a blower or lens paper to clean the lens, and be careful not to scratch or mar the lens.

Fire and Shock Precautions

1. Ensure that there is sufficient ventilation and that vents are unobstructed to prevent potentially dangerous concentrations of ozone and the build-up of heat inside your projector. Allow at least 8 inches (20cm) of space between your projector and a wall. Allow at least 20 inches (50 cm) of space between the ventilation outlet of the lamp power supply and an object.
   Connect the projector exhaust outlet with the exhaust equipment having a capacity of 16m^3/min or more.
2. Prevent foreign objects such as paper clips and bits of paper from falling into your projector. Do not attempt to retrieve any objects that might fall into your projector. Do not insert any metal objects such as a wire or screwdriver into your projector. If something should fall into your projector, disconnect it immediately and have the object removed by a qualified service person.
3. Do not place any liquids on top of your projector. Refer servicing to qualified service personnel if liquid has been spilled.
4. Keep any items such as magnifying glass out of the light path of the projector. The light being projected from the lens is extensive, therefore any kind of abnormal objects that can redirect light coming out of the lens, can cause unpredictable outcome such as fire or injury to the eyes.
5. Do not cover the lens with the supplied lens cap or equivalent while the projector is on. Doing so can lead to distorting or melting of the cap and burning your hands due to the heat emitted from the light output.
6. When using a LAN cable:
   For safety, do not connect to the connector for peripheral device wiring that might have excessive Voltage.

CAUTION: High Pressure Lamp May Explode if Improperly Handled. Refer Servicing to Qualified Service Personnel.

Lamp Caution: Please read before operation

Due to the lamp being sealed in a pressurized environment, there is a small risk of explosion, if not operated correctly. There is minimal risk involved, if the unit is in proper working order, but if damaged or operated beyond the recommended hours, the risk of explosion increases. Please note that there is a warning system built in, that displays following message when you reach a preset operating time Bulb Over Time . When you see this message please contact your dealer for a replacement. If the lamp does explode, smoke will be discharged from the vents located on the back of the unit. Do not stand in front of the vents during the operation. This smoke is comprised of glass in particulate form and Xenon gas, and will not cause harm if kept out of your eyes. If your eyes have been exposed to this gas, please flush your eyes out with water immediately and seek immediate medical attention. Do not rub your eyes! This could cause serious injury.

WARNING:

1. Do not look into the lens while the projector is on. Serious damage to your eyes could result.
2. When main body is damaged, cooling fluids may come out of internal part. DO NOT touch and drink the cooling fluid. When the cooling fluids are swallowed or contacted with your eyes, please consult with doctors immediately.

CAUTION

Never unplug the projection head power plug from the outlet or disconnect the breaker connected to the AC power cable of the lamp power supply under the following conditions. Doing so can damage the projector.

- While projecting images
- While cooling after the projector has been turned off. (The POWER button LED blinks in white while the fan is rotating, and “cooling...” is displayed on the LCD screen. The cooling fan continues to work for 5 minutes.)

Disposing of your used product

EU-wide legislation as implemented in each Member State requires that used electrical and electronic products carrying the mark (left) must be disposed of separately from normal household waste.
This includes projectors and their electrical accessories or lamps. When you dispose of such products, please follow the guidance of your local authority and/or ask the shop where you purchased the product.
After collecting the used products, they are reused and recycled in a proper way. This effort will help us reduce the wastes as well as the negative impact to the human health and the environment at the minimum level.
The mark on the electrical and electronic products only applies to the current European Union Member States.

For questions relating to unclear points or repairs

Contact your dealer or the following support branch for questions relating to unclear points, malfunctions and repairs of the product.

In Europe

NEC Europe, Ltd. / European Technical Centre
Address: Unit G, Stafford Park 12, Telford TF3 3BJ, U.K.
Telephone: +44 1952 237000
Fax Line: +44 1952 237006

(MEMO)

Table of Contents

Table of Contents 5

1.What's in the Box? and the Names of the Projector Parts 6

1-1. Features 6
1-2. What's in the Box? 8
1-3. Names of the Projector Parts 10

2.Installation and Connection 17

2-1. Steps for setting up and connecting 17
2-2. Connecting the image input terminals 18
2-3. Connecting the various control terminal 19

3.Projection of Images (Basic Operation) 20

3-1. Steps of projecting images 20
3-2. Turning your projector on 21
3-3. Selecting the title of input signal 23
3-4. Adjusting the position and the size of projected screen 24
3-5. Preventing misoperations 28
3-6. Turning on/off the lamp with the projector turned on 29
3-7. Turning your projector off 30

4.Using Menus 31

4-1. Basic operation with adjustment menus 31
4-2. Table of adjustment menus 36
4-3. Title Select 37
4-4. Configuration 38
4-5. Title Setup 39
4-6. Information 39

5.Maintenance of Your Projector 43

5-1. Cleaning the Cabinet 43
5-2. Cleaning the Lens 43
5-3. Replacing the Air Filter 44

6.Appendix 51

6-1. Troubleshooting 51
6-2. Indicator display list 53
6-3. Operation using an HTTP browser 55
6-4. Outline Drawing 57
6-5. Specifications 59
6-6. Pin Assignment and Functions of Terminal 60
6-7. Related products list 68

1. What's in the Box? and the Names of the Projector Parts

1-1. Features

- DLP Cinema® dedicated projector that supports large screen needs

NEC has applied its mounting technology and leading imaging technology to newly develop lamp and optical systems as well as a cooling system to support large screen needs.

- Equipped with easy to use functions

(1) Lens memory function that can be operated with one touch, and lamp power memory function
The DLP Cinema® projector is provided with a lens memory function for storing lens zoom positions and shift positions to set screens sizes for each input signal. It is also provided with a lamp power memory function for storing the brightness of the images on the screen for each input signal.
Even if you are projecting multiple images that have different settings for image sizes and brightness, you can project them with the conditions pre-registered for each signal, simply by selecting the corresponding signal.

(2) Equipped with a lamp output control function
You can set to any brightness setting, from low brightness to high brightness. This function makes it possible to minimize the fluctuation (*) in brightness as brightness of the lamp decreases as a result of long-term lamp usage.
* The time for maintaining fluctuations in brightness depends on the setting value for brightness.

(3) Easy lamp replacement
The lamp can be replaced from the backside of the projector, so the lamp can be easily replaced even in narrow locations when a film projector is setup on the side and there is not much space on the projector side.

(4) Registered signal selection buttons
The projector has been equipped with new 8 signal selection buttons that make it easy to select registered signals. To this projector, 100 titles at most can be registered (input signal registration). Among the registered titles, any 8 titles can be assigned to the buttons <1> to <8>.

(5) Software which enables the user to operate the projector from a PC via a network is available (optional).
You can operate the projector via a network by installing the separately supplied Digital Cinema Communicator (DCC) on your PC.

(6) Supports various contents and types of usage by applying a separately-sold multi-media switcher.
By connecting an optional multi-media switcher (MM3000B), you can input RGB/VIDEO analog signals, and digital signals in formats not supported by the projector.

- DMD Face Dust Protection Structure

A dust control shield is arranged between each DMD chip of R, G and B, and the spectroscopic/condenser prism to prevent dust and dirt in the air, and oily particles in smoke associated with event halls from coming into contact with the face of the DMD and causing operating problems.

- Efficient cooling of the heat from the DMD unit by the cooling structure

The DMD unit uses a highly efficient liquid cooling method. This efficiently eliminates heat applied to the DMD by the complete dust control structure and high light output, thereby ensuring the reliability of the projector.

1-2. What's in the Box?

Check the content of the accessories.

1-2-1. Accessories for the projector (NS3200S)

☐ NC3200S projector

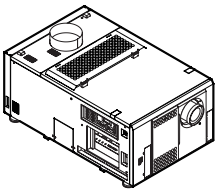

☐ Attachment for lamp x 1

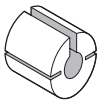

☐ Sheet of title labels (for 20 labels) x 2

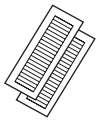

☐ Cover key x 2

☐ Lamp door key x 2

☐ CD-ROM (User's Manual)

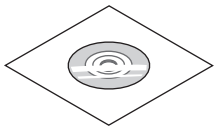

☐ Lens holder (NC-PH01)

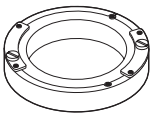

☐ Small iris x 1

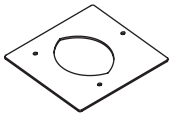

☐ Exhaust outlet protective sheet x 1

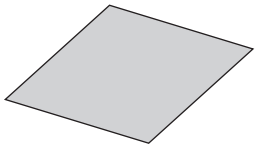

☐ Exhaust outlet protective sheet fastening band x 4

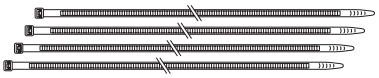

☐ Air inlet cover x 2

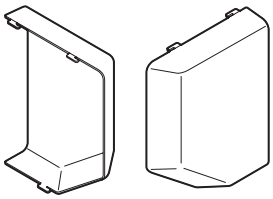

☐ Retainer for lamp power AC power cable x 1

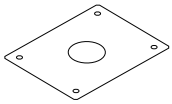

☐ Important Information x 1

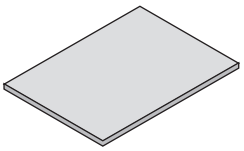

1-2-2. Accessories for the lamp power supply (NC-32PS01)

☐ Lamp power supply (NC-32PS01) (with the power cable)

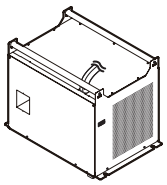

☐ Dedicated interface cable x 1

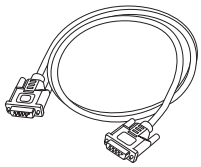

TIP In the event that you did not receive all of the accessories outlined above, or some are damaged, contact your dealer/distributor.
Differs slightly from the drawings in this manual, but there is no problem in actual use.

1-3. Names of the Projector Parts

1-3-1. Front of the Projector

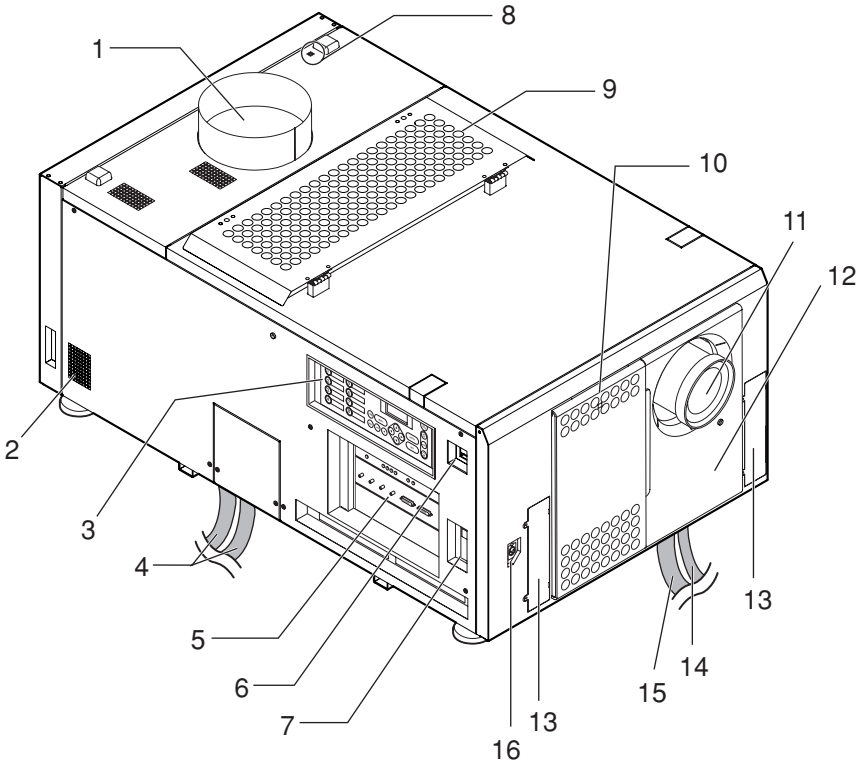

1. Air outlet (for cooling the lamp)
   Connects to an exhaust device to exhaust heat from the lamp. Please contact your dealer/distributor to install the exhaust device.
2. Air outlet
   The outlet for the heated air in the projector. Do not cover.
3. Control panel
   On the control panel, power to your projector is turned on or off, titles are selected, and various adjustments are made of projected screen. (See page 15)
4. Lamp power cable
   This is the power cable that connects with the lamp power supply. Request your dealer/distributor to connect/disconnect the power cable.
5. Connection terminals
   Various image signal cable are to be connected here. (See page 14)
   You can expand signal input terminals by installing the optional media block or internal multi-media switcher (MM3000B). Contact your dealer/distributor for more information on the media block and MM3000B.
6. Main power switch
   While AC power is being supplied, set the main power switch to ON, then your projector will enter a standby state.
7. Ethernet port
   The connector for external devices such as a cinema server or a PC installed with the DCC. (See page 14)
8. Buzzer
   The buzzer rings when the power is turned on or an error has occurred.

9. Air inlet (for cooling the lamp)
   The air inlet for cooling the lamp. Do not cover.
   An air filter is attached over the air inlet to prevent dust. Refer to "5-3. Replacing the Air Filter" (page 44) on how to replace the air filter.
10. Air inlet (for cooling the projector electric circuits)
   The air inlet for cooling the projector electric circuits. Do not cover.
   An air filter is attached over the air inlet to prevent dust. Refer to "5-3. Replacing the Air Filter" (page 44) on how to replace the air filter.
11. Lens (optional)
   Images are projected from the lens. Request your dealer/distributor to install or replace the lens.
12. Interlock connector (Inside front of projector)
   This is the connector for the projector safety device. This is used to control the projector from an external source. Consult with your dealer/distributor about using this.
13. Conversion lens stay fittings
   Fittings to attach the fixing stay when using the optional conversion lens (anamorphic lens or wide converter lens). Contact your dealer/distributor for more information on the conversion lens and fixing stay.
14. Dedicated interface cable
   This is the interface cable that connects with the lamp power supply.
15. AC power cable (For projector)
   This is the cable that supplies AC power to the projector head. The AC power cable is not an accessory. Consult with your dealer/distributor about the AC power cable.
16. Conversion lens stage connector terminal
   The terminal to connect the control connector of the conversion lens table when using the optional conversion lens (anamorphic lens or wide converter lens). Contact your dealer/distributor for an installation of the conversion lens.

NOTE Do not touch the air outlet and backside of the main unit when your projector is operating. Otherwise, the high temperature may cause burns.

1-3-2. Rear of the projector

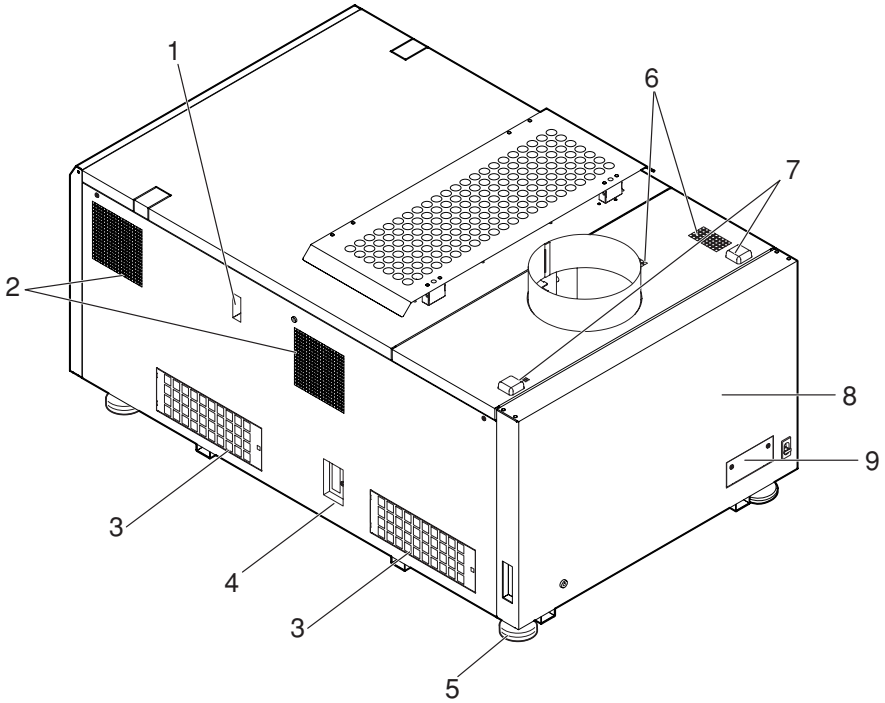

1. Cooling fluid gauge
   The gauge to indicate the remaining amount of the DLP cooling fluid.
2. Air outlet (for cooling the projector electric circuits)
   The air outlet to exhaust the heat from the projector electric circuits. Do not cover.
3. Air inlet (for cooling the projector electric circuits)
   The air inlet for cooling the projector electric circuits. Do not cover. An air filter is attached over the air inlet to prevent dust. Refer to "5-3. Replacing the Air Filter" (page 44) on how to replace the air filter.
4. Function expansion terminal connector
   The connector to attach the terminal to expand the projector functions.
5. Level adjusters (in four positions on bottom)
   In the ordinary installation, you can adjust the projector inclination at 4 positions.
6. Air outlet (for cooling the projector electric circuits)
   The air outlet to exhaust the heat from the projector electric circuits. Do not cover.
7. Rear status indicator
   These indicate the status of the projector. When the projector is operating normally, these light/blink in green or orange. When an error occurs, they light/blink in red. When an error occurs, check the contents of the display on the LCD screen. (See page 54)
8. Lamp door
   This opens to allow the lamp to be replaced. Please contact your dealer/distributor to install and to replace the lamp bulb and lamp house.
9. Optical axis adjustment system protection cover
   The protection cover for the optical axis adjustment system (screw) for the lamp. Do not open this cover. Contact your dealer/distributor for adjusting the optical axis.

NOTE Do not cover the air inlets and outlet while the projector is in operation. Insufficient ventilation leads to a rise of the internal temperature and may cause a fire or malfunction.

⚠WARNING:

Only service personnel should open the lamp door.
- The interior reaches high temperatures and there is a risk of burns.
- There is a risk of injury if the lamp is broken.

1-3-3. Lamp power supply (NC-32PS01)

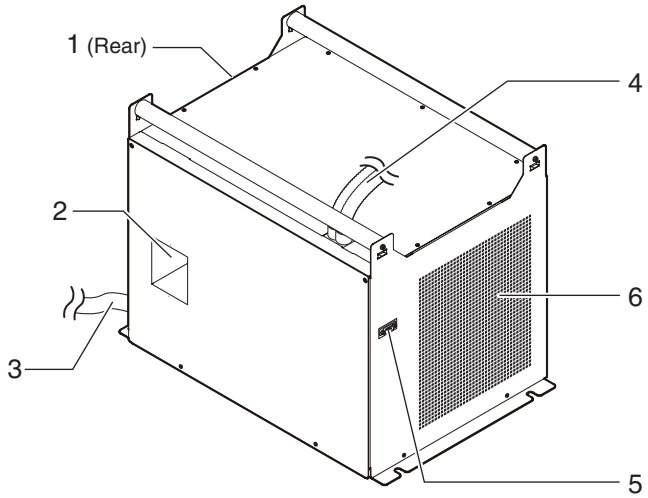

1. Air outlet
   This exhausts heat from the lamp power supply.
2. Main power switch
   This is the main power switch for the lamp power supply.
3. AC power cable
   The AC power cable is not an accessory. Request service personnel to connect the power cable.
4. Two lamp power cables
   These connect to the lamp power supply input terminals of the projector. Request service personnel to connect the power cable.
5. Control terminal (Dedicated interface cable)
   This connects to monitor the status of the lamp power supply from the projector head.
6. Air inlet
   Outside air is taken in here to lower the temperature inside the projector. Do not cover this inlet.

NOTE
- Do not touch the air outlet and backside of the main unit when your projector is operating. Otherwise, the high temperature may cause burns.
- Do not cover the air inlet and outlet during operation. Inadequate air intake may lead to a rise in inside temperature, thus causing a free or serious projector failure.

1-3-4. Connection terminals

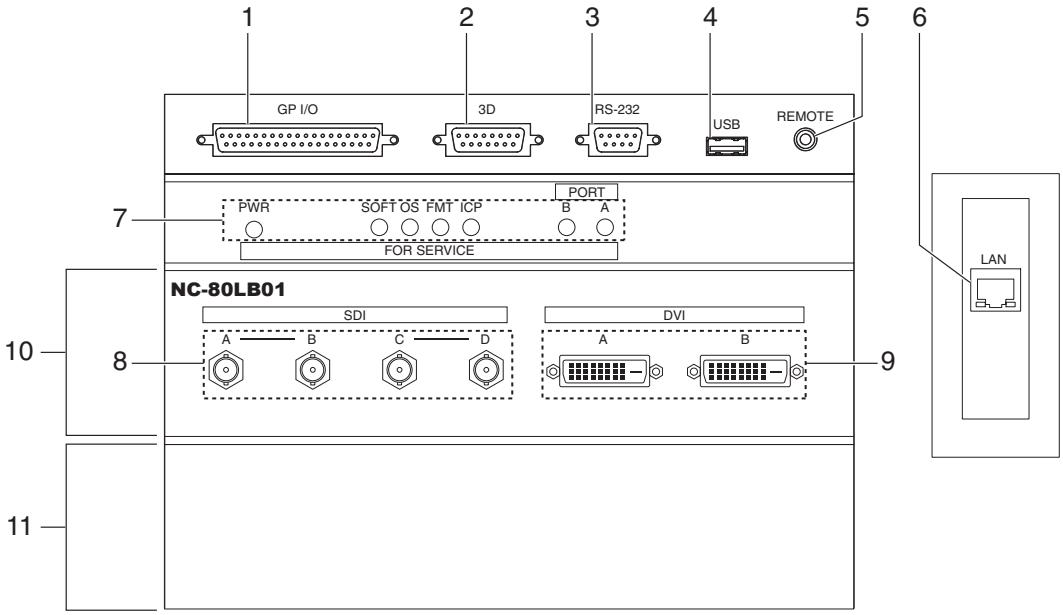

1. External control terminal (GP I/O) (D-Sub 37P)
   The terminal for externally controlling the projector or connecting a 3D image system to the projector. (See page 61)
2. 3D terminal (3D) (D-Sub 15P)
   The terminal for connecting a 3D image system to the projector. (See page 66)
3. PC control terminal (RS-232C) (D-Sub 9P)
   The terminal for service personnel to set data for the projector or for operating the projector from a PC via an RS-232C. Connect the projector and the PC with a commercially available RS-232C straight cable.
4. USB port (USB) (type A)
   The port for the projector maintenance.
5. Remote control device terminal (REMOTE) (Stereo mini)
   The terminal for controlling the projector from a remote control device.
6. Ethernet port (LAN) (RJ-45)
   The port for interfacing with an image signal server or controlling the projector from a PC via a network. Connect the projector and the PC with a commercially available Ethernet cable (10/100/1000Base-T).
7. Device management indicator
   The indicator for displaying the projector status. Used by service personnel during maintenance.
8. HDSDI input terminal (SDI-A/SDI-B/SDI-C/SDI-D) (BNC)
   The terminal for connecting an image signal server or video imaging device. Use a 75Ω coaxial cable.
   Use a combination of SDI-A and SDI-B, or SDI-C and SDI-D for a dual-link connection.
9. DVI-D input terminal (DVI-A/DVI-B) (DVI-D 24P)
   The terminal for connecting a DVI-D output terminal of a PC. Use a commercially available DVI-D signal cable (single-link).
10. Slot B
    The slot for a signal input board (NC-80LB01) or media block.
    A signal input board is installed at the time of factory shipping. Contact your dealer/distributor for an installation or uninstallation of a signal input board or media block.
11. Slot A
    The slot for a media block or internal multi-media switcher (MM3000B).
    The slot is empty at the time of factory shipping. Contact your dealer/distributor for an installation of a media block or internal multi-media switcher.

1-3-5. Control panel

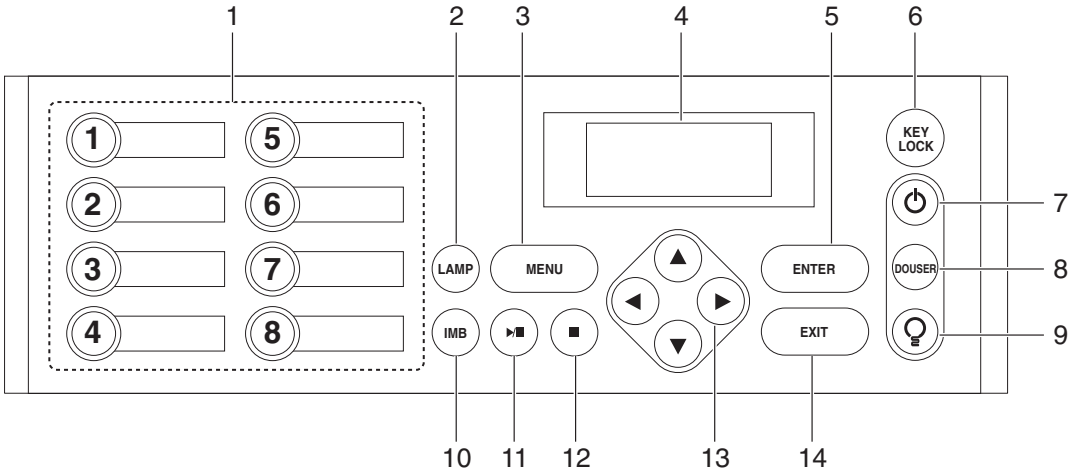

1. Button <1> to <8>

   Press the button <1> to <8> to select a title (input signal) assigned to each button.

   Up to 100 titles (input signals) can be registered to this projector, and any 8 titles from them can be assigned to the button <1> to <8>.

   Indicators on the left of each button show their assigned title or selection status.

Lit white	A title is assigned to the button
Lit green	The title is being selected
Off	No title is assigned to the button

2. LAMP button

   Press this button to display the lamp adjustment menu. (See page 27)

3. MENU button

   Press this button to display the menu for various settings and adjustments. (See page 36)

4. LCD screen

   The LCD screen displays menus and setting values for the projector operations.

5. ENTER button

   Press this button to select the menu item.

6. KEY LOCK button

   Press this button to lock (KEY LOCK) the buttons on the control panel. Buttons on the control panel do not function while KEY LOCK is on.

   Pressing the KEY LOCK button for one second or longer while KEY LOCK is off locks the buttons.

   Pressing the KEY LOCK button for one second or longer while KEY LOCK is on unlocks the buttons. (See page 28)

NOTE KEY LOCK becomes automatically on if no control panel operation takes place in the standby state for 30 seconds by default. (See page 28)

7. POWER button

Press this button for more than three seconds to turn on or off (standby) the projector.

In order to start up the projector, turn on the main power switch for the lamp and then the main power switch for the projector to set the projector in the standby state. (See page 21)

Lit green	Power is on
Blinking green	The projector is starting up.
Lit white	Power is off (in the standby state)
Blinking white	The cooling fan(s) is running immediately after a power-off.

8. DOUSER button

Press this button to open and close the douser.

9. LAMP ON/OFF button

Press this button for five seconds or longer to turn on or off the lamp while the projector is on. (See page 29)

10. IMB button

This button is operable when the media block is installed in the projector.

Press this button to display the operation menu of the media block.

11. Play/pause button

This button is operable when the media block is installed in the projector.

Press this button to play or pause the image contents.

12. Stop button

This button is operable when the media block is installed in the projector.

Press this button to stop playing the image contents.

13. ▲/▼/◀/▶ (UP/DOWN/LEFT/RIGHT) buttons

Press these buttons to select a menu item while a menu is displayed.

14. EXIT button

Press this button to return to the previous menu item.

2. Installation and Connection

2-1. Steps for setting up and connecting

Use the following steps for setting up your projector:

- Step 1

Setup the screen and projector. (Contact your dealer to carry out the setup.)

- Step 2

Connect cables to the image input terminals. (See page 18)

Connect cables to the various control terminals. (See page 19)

2-2. Connecting the image input terminals

The projector has two image input terminals (HDSDI input terminal and DVI-D input terminal).

- HDSDI A/B/C/D input terminal (SDI-A/SDI-B/SDI-C/SDI-D) ---------- Inputs serial digital images from a cinema server or an image device such as HDSDI VTR.
- DVI-D A/B input terminal (DVI A/DVI B) ---------- Inputs digital RGB signals from a PC.

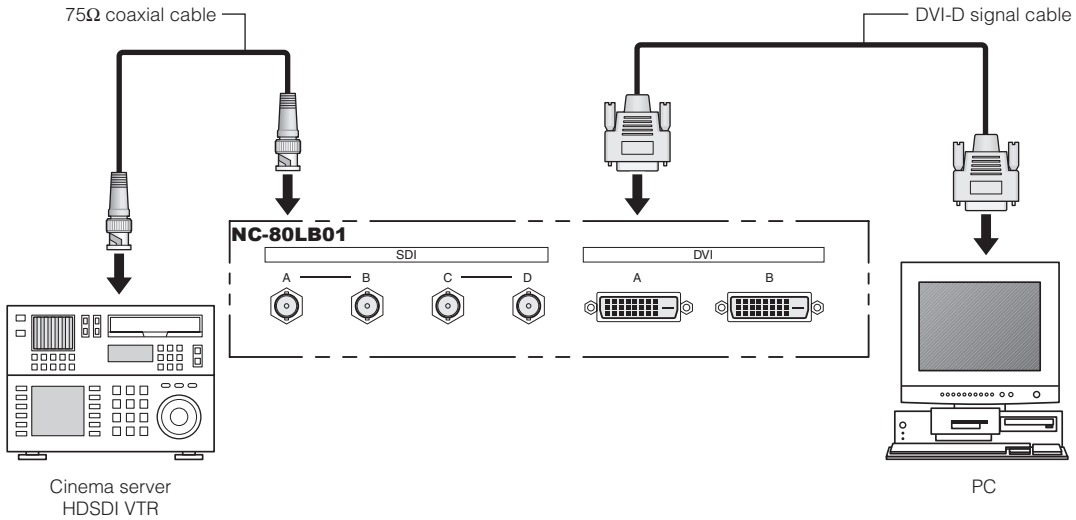

2-3. Connecting the various control terminal

For control, your projector comes with such ports as the PC control terminal and the Ethernet port (RJ-45).

- PC control terminal (RS-232) ---------- Use this terminal when controlling the projector in serial connection from a PC.
- Ethernet port (LAN) ---------- Use this port when controlling the projector in LAN connection from a PC.

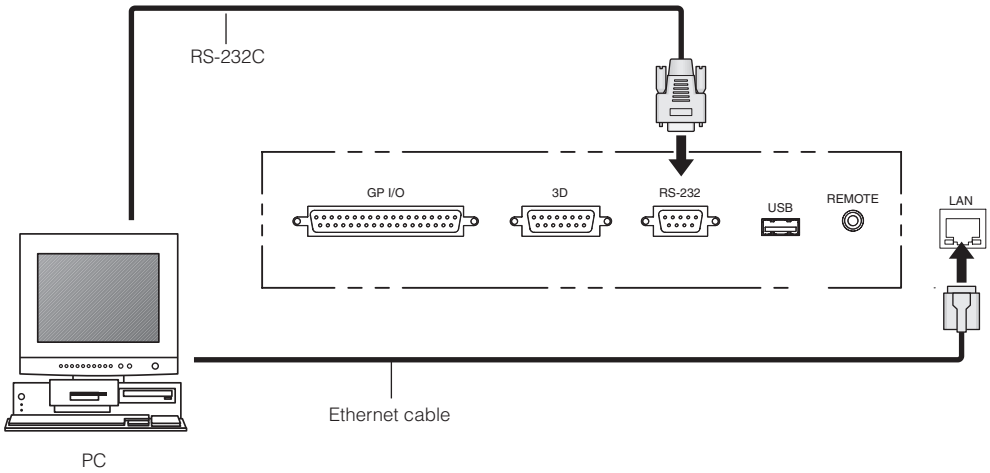

3. Projection of Images (Basic Operation)

3-1. Steps of projecting images

- Step 1

Turn on the power to the projector. (See page 21)

- Step 2

Select the title of input signal. (See page 23)

- Step 3

Adjust the position and size of the projected screen. (See page 24)

- Step 4

Turn off the power to the projector. (See page 30)

3-2. Turning your projector on

The power to this projector is separated to the power to the projector head and power to the lamp. To project an image, it is necessary for both power supplies to be on.

Preparation: Supply AC power to the projector head and to the lamp power supply.
Please contact your dealer/distributor to connect the power cable.

NOTE
- Turn off the main power switch to the projector head and the lamp power supply when supplying or cutting AC power to the projector and the lamp power supply.
  Supplying or shutting down the AC power while the main power switch is on will damage the projector.
- Turning on and off the projector involves a two-step operation; the “main power switch” and the “POWER button”.
- Turning power on (See this page)

[1] Turn on the “main power switch” of the projector and the lamp power supply.
Your projector is set in a standby state.
[2] If KEY LOCK is on, press the KEY LOCK button for one second or longer.
KEY LOCK is off and buttons on the control panel become operable.
[3] Press the POWER button three seconds or longer.
Your projector is turn on.

- Turning power off (See page 30)

[1] Press the POWER button three seconds or longer.
Your projector is set in a standby state.
[2] When the fan has stopped, turn off the “main power switch” of the projector and the lamp power supply.
Your projector is turned off.

1 Remove the lens cap.

2 Turn the main power switch on the lamp power supply to on.

The lamp power fan will begin rotating.

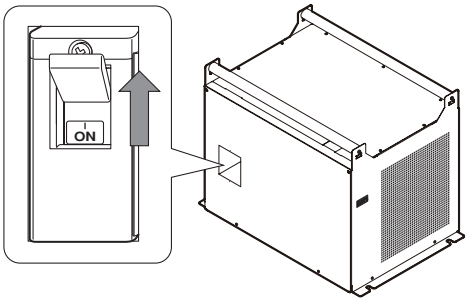

3 Turn on the main power switch on the side of the projector.

A buzzer will ring on the projector. The POWER button will blink green and the Rear STATUS indicator will light orange (standby state). KEY LOCK becomes automatically on if no control panel operation takes place in the standby state for 30 seconds by default. Buttons on the control panel do not function while KEY LOCK is on. (See page 28)

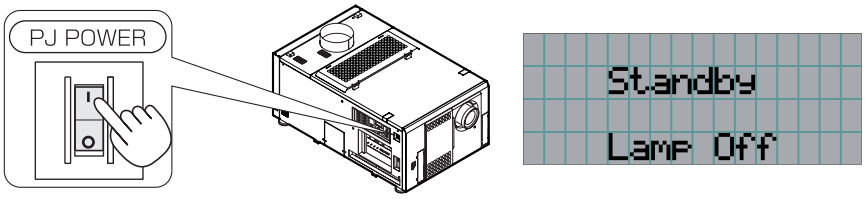

4 If KEY LOCK is on, press the KEY LOCK button for one second or longer.

KEY LOCK becomes off. The color of the KEY LOCK button changes from orange to white, and buttons on the control panel become operable. (See page 28)

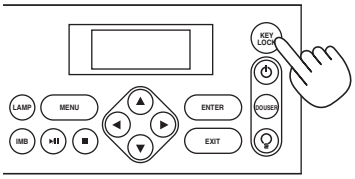

5 Press the POWER button on the control panel of your projector three seconds or longer.

Your projector is turn on, and the screen glows light about 30 seconds later. The status of the POWER button, DOUSER button, and LAMP ON/OFF button changes as follows.

POWER button	Lit green
DOUSER button	Lit green (douser is off)
LAMP ON/OFF button	Blinking white (lamp is off)
Button <1> to <8>	The button which was last selected is lit green

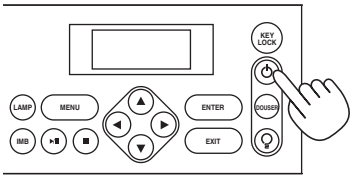

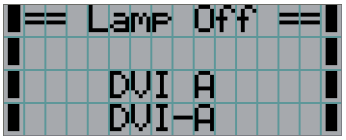

6 Press the LAMP ON/OFF button on the control panel for five seconds or longer.

The lamp is turned on and the screen glows light about 15 seconds later. The LAMP ON/OFF button lights green. The douser is closed until the screen glows light (the DOUSER button blinks white). When the douser is open, the DOUSER button lights green.

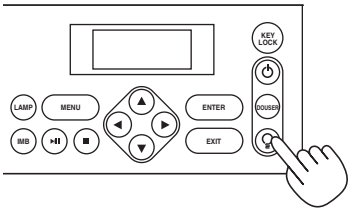

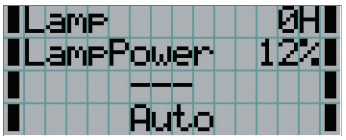

NOTE

- While your projector is on, be sure to have the lens cap removed from the lens.
  Otherwise, the lens cap may get deformed due to a heat buildup.
- In the following instances, the power to your projector cannot be turned on even if you press the POWER button.
  - When the inside temperature is abnormally high. The protective function prevents power from turning on. Wait some time (until the projector inside cools down) and then turn on the power.
  - When the Rear STATUS indicator is blinking in red without the lamp lighting up after power-on. Your projector may be in trouble. Check the error display on the LCD screen and contact your dealer/distributor for instructions.
- Note that the image may sometimes flicker until the lamp has stabilized (5 to 10 minutes) after power-on. This is due to the characteristics of the lamp and is not trouble of your projector.

3-3. Selecting the title of input signal

This projector allows you to select pre-registered signals using the signal selection buttons on the control panel (up to 8 signals). Request your dealer/distributor for details on registering and changing titles. This section explains the steps for selecting registered signals.

1 Turn on the power to the image devices connected to the projector.

2 Press the MENU button.

3 Press the LEFT/RIGHT button to display “Title Select” on the LCD screen.

At each press of the LEFT/RIGHT buttons, the display will cycle as “Title Select” ←→ “Configuration” ←→ “(Title Setup)” ←→ “Information.”

4 Press the DOWN button.

The title of the input signal is displayed.

- When you have made a wrong selection, press the UP button. A return will be made to the previous menu.

5 Press the LEFT/RIGHT buttons to display “Title of Signal to be Projected” on the LCD screen.

6 Press the ENTER button.

The title of the signal to be projected is selected.

- The (*) mark on the LCD indicates that this is the currently selected item.

3-4. Adjusting the position and the size of projected screen

3-4-1. Displaying the test pattern

1 Press the MENU button, or select a test pattern from signal selection buttons (button <1> to <8>).

If you register the test patterns to the signal selection buttons (<1> to <8> buttons), select the test pattern according to “3-3. Selecting the title of input signal (See page 23)”.

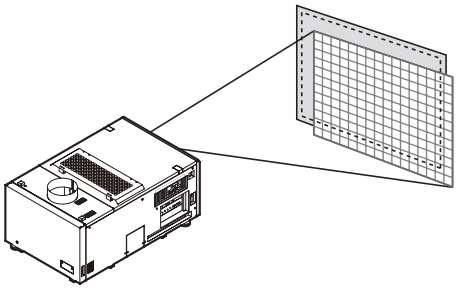

2 Press the LEFT/RIGHT button to display “Title Select” on the LCD screen.

3 Press the DOWN button.

The title of the input signal is displayed.

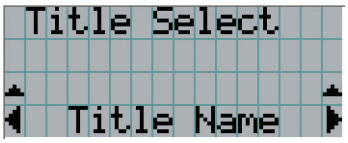

4 Press the LEFT/RIGHT button to display “TEST Pattern” on the LCD screen.

5 Press the DOWN button.

The LCD screen enters the mode where you can select a test pattern.

6 Press the LEFT/RIGHT button.

This switches the test pattern name displayed on the LCD screen.

7 Display on the LCD the name of the test pattern to be projected, then press the ENTER button.

The test pattern is displayed.

- To cancel the test pattern display, reselect the signal to be project.

3-4-2. Adjusting the position of the projected screen (Lens shift)

1 Press the MENU button.

2 Press the LEFT/RIGHT button to display “Configuration” on the LCD screen.

3 Press the DOWN button.

4 Press the LEFT/RIGHT button to display “Lens Control” on the LCD screen.

5 Press the DOWN button.

The screen (“Lens Position”) to adjust the position of the projected screen is displayed.

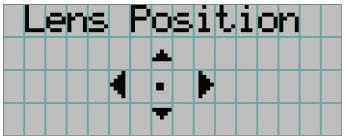

6 Press the UP/DOWN/LEFT/RIGHT button.

The position of the projected screen moves in the selected direction.

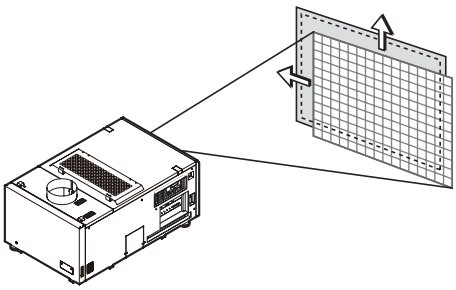

7 Press the EXIT button when adjustment is complete.

The display will return to a menu one level above (where “Lens Control” is displayed).

3-4-3. Fine adjustment of the size (zoom) and focus of the projected screen

1 Press the MENU button.

2 Press the LEFT/RIGHT button to display “Configuration” on the LCD screen.

3 Press the DOWN button.

4 Press the LEFT/RIGHT button to display “Lens Control” on the LCD screen.

5 Press the DOWN button.

The screen (“Lens Position”) to adjust the position of the projected screen is displayed.

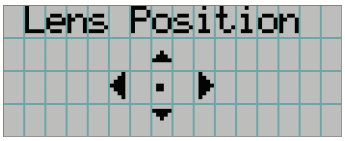

6 Press the ENTER button.

The screen to adjust the size and focus of the projected screen is displayed.
Press the ENTER button to switch the display between “Lens Position” and “Focus Zoom” adjustments.

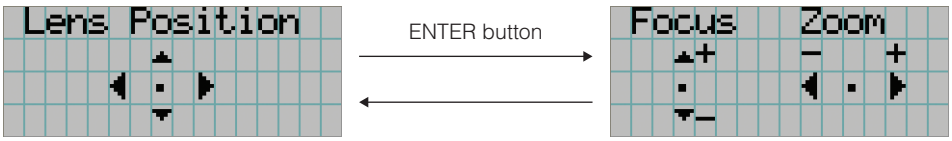

7 Adjust the size and focus of the projected screen.

Press the UP/DOWN button to adjust the focus.
Press the LEFT/RIGHT button for fine adjustment of the size.

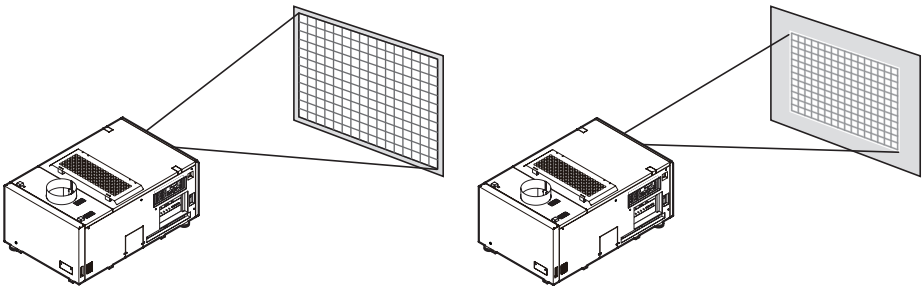

Focus
(UP/DOWN button)

Zoom
(LEFT/RIGHT button)

8 Press the EXIT button when adjustment is complete.

The display will return to a menu one level above (where “Lens Control” is displayed).

3-4-4. Adjusting the brightness of the projected screen (Lamp output)

1 Press the LAMP button.

"Lamp Setup" is displayed.

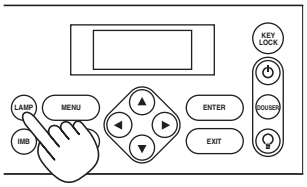

2 Press the DOWN button.

The screen to adjust the lamp output is displayed.

3 Press the LEFT/RIGHT button to adjust the lamp output.

4 Press the ENTER button.

The specified adjustment value is applied.

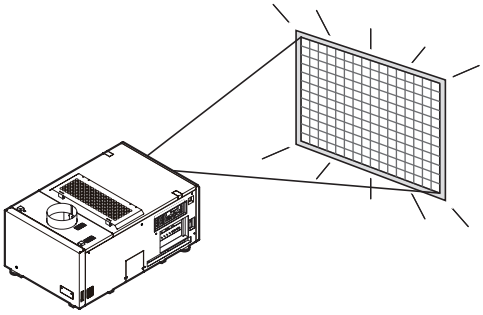

3-5. Preventing misoperations

Buttons on the control panel can be locked (KEY LOCK) to prevent misoperations. Buttons on the control panel do not function while KEY LOCK is on. KEY LOCK must be off to operate these buttons.

NOTE

- KEY LOCK is automatically turned on in the following cases.
  - When the projector has entered the standby state by turning on the main power switch of the projector and the lamp power supply while the AC power is supplied.
  - When the projector has entered the standby state after turning off the power using the POWER button.
- The timing where KEY LOCK is turned on while the projector is in standby state depends on the “Auto Key Lock” setting in the adjustment menu.
  - When Auto Key Lock is enabled, KEY LOCK becomes automatically on if no control panel operation takes place in the standby state for 30 seconds. KEY LOCK becomes automatically on again even after KEY LOCK is turned off if no control panel operation takes place for 30 seconds.
  - When Auto Key Lock is disabled, KEY LOCK becomes automatically on when the projector enters the standby state; however, it stays off after KEY LOCK is turned off.

3-5-1. KEY LOCK setting

1 Press the KEY LOCK button on the control panel for one second or longer.

KEY LOCK becomes on. The KEY LOCK button lights orange.

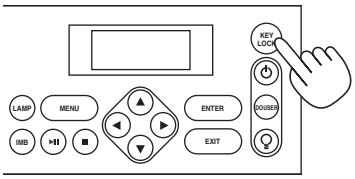

3-5-2. Turning KEY LOCK off

1 Press the KEY LOCK button for one second or longer while KEY LOCK is on.

KEY LOCK becomes off. The KEY LOCK button lights white.

3-6. Turning on/off the lamp with the projector turned on

3-6-1. Turning off the lamp

1 Press the LAMP ON/OFF button on the control panel for five seconds or longer.

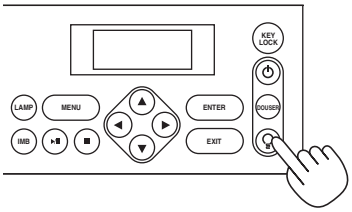

3-6-2. Turning on the lamp

1 Press the LAMP ON/OFF button on the control panel for five seconds or longer.

3-7. Turning your projector off

1 Press the POWER button on the projector control panel for three seconds or longer.

The lamp is turned off, the POWER button blinks white, and the Rear STATUS indicator blinks orange (cooling state). The fan will continue to rotate while cooling, and the amount of time remaining for cooling is displayed on the LCD screen. The cooling-off time is 5 minutes.
When the cooling is finished, the POWER button lights white, and the Rear STATUS indicator lights orange (standby state). KEY LOCK becomes automatically on if no control panel operation takes place in the standby state for 30 seconds by default. Buttons on the control panel do not function while KEY LOCK is on. (See page 28)

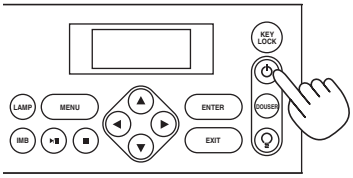

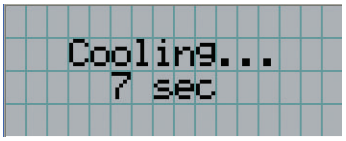

2 Wait till the projector enters standby state before turning off the main power switch of the projector.

The POWER button is turned off and the main power is turned off.

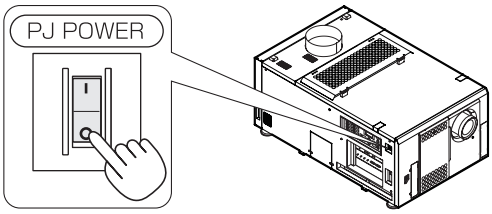

3 Turn the main power switch on the lamp power supply to off.

The fan will continue to rotate for a short amount of time (approximately 5 seconds) immediately after turning off the power.

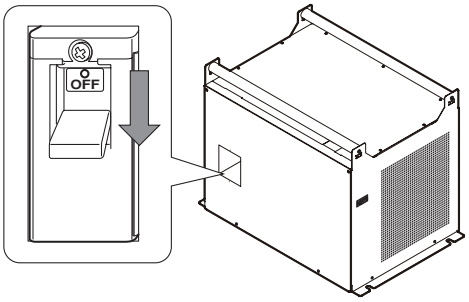

4 Turn off the AC power to the projector head and to the lamp power.

NOTE
- In the following instances, do not turn off the main power switch or disconnect the AC power. Doing so can damage the projector.
  - While projecting images
  - While the fan is running after the power is turned off (The cooling-off time is 5 minutes)

4. Using Menus

4-1. Basic operation with adjustment menus

To adjust the projector, display the menu on the LCD screen of the projector control panel.

4-1-1. Screen display

The menu display screen is composed of a menu display field (the upper two lines) and a setting item display field (the bottom two lines).

← Displays the main menu or submenus.
← Displays submenus or selection items.
← Displays settings and selection status.
← Displays settings, selected items and information on selected menus.

The meanings of symbols in the menu display screen are outlined below.

	Indicates that there is a menu of a higher level. Press the UP button to return to a menu one level above.
	Indicates that there is a selected item or menu at the same level. Press the LEFT/RIGHT button to display other selected items or menus.
	Indicates that there is a menu of a lower level. Press the DOWN button to display the menu one level below.
	Indicates that there are setting items of a lower level. Press the UP button to return to a menu one level above. Press the DOWN button to display the setting item one level below.

When not displaying menus, the following screen is normally displayed.

When in standby

When the projector is in a standby state (the main power switch in on), the following is displayed.

When power is turned on

When the power is turned on, the following is displayed.

← Displays the hours of lamp bulb use.

← Displays the lamp output (%).

← Displays the selected title.

← Displays the selected port.

When the power is turned off

The amount of time remaining for cooling is displayed as shown below, when the power to the projector head is turned off.

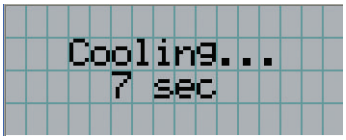

When a button is pressed while the key lock function is on

If a button on the control panel is pressed while the key lock function is on, the following is displayed and the button will not function.

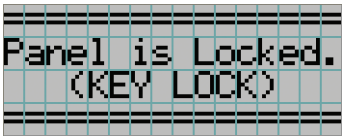

4-1-2. Operating menus

Preparation: Turn your projector on. (See page 21)

1 Press the MENU button on the control panel of your projector.

The menu is displayed in the LCD screen.

2 Press the LEFT/RIGHT buttons to display “Information.”

At each press of the LEFT/RIGHT buttons, the display will cycle as “Title Select” ←→ “Configuration” ←→ “(Title Setup)” ←→ “Information.”

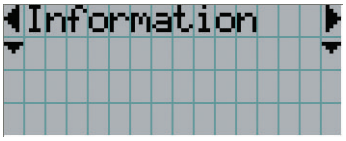

3 Press the DOWN button.

The submenu “Lamp” of “Information” is displayed.
The menu item can be selected by pressing the ENTER button instead of the DOWN button
To return to the previous state, press the UP button, or the EXIT button.

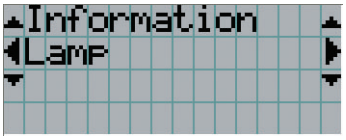

4 Press the LEFT/RIGHT button to select the submenu “Version.”

At each press of the LEFT/RIGHT button, the display will cycle as “Lamp” ←→ “Preset Button” ←→ “Usage” ←→ “Error Code” ←→ “Version” ←→ “IP Address” ←→ “Setup Date” ←→ “Option Status.”

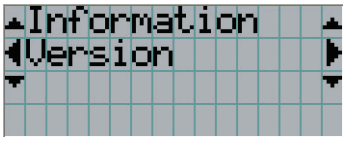

5 Press the DOWN button.

The submenu “System” another rank lower than “Version” is displayed.

6 Press the DOWN button.

The submenu “BIOS” another rank lower than “System” is displayed.

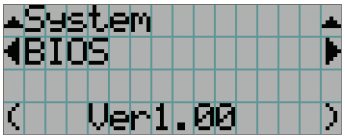

7 Press the LEFT/RIGHT button to select the submenu “Data.”

At each press of the LEFT/RIGHT button, the display will cycle as “BIOS” ←→ “Firmware” ←→ “Data” ←→ “Serial No.” ←→ “Model,” and each version information is displayed.

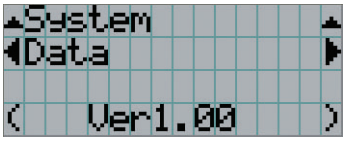

8 Press the UP button several times.

At each press of the UP button, the display will return to a menu one level above.

4-1-3. How to enter alphanumeric characters

Alphanumeric characters are entered for items, such as the title of input signal.
Characters can be entered by pressing numeric buttons on the control panel on this projector.

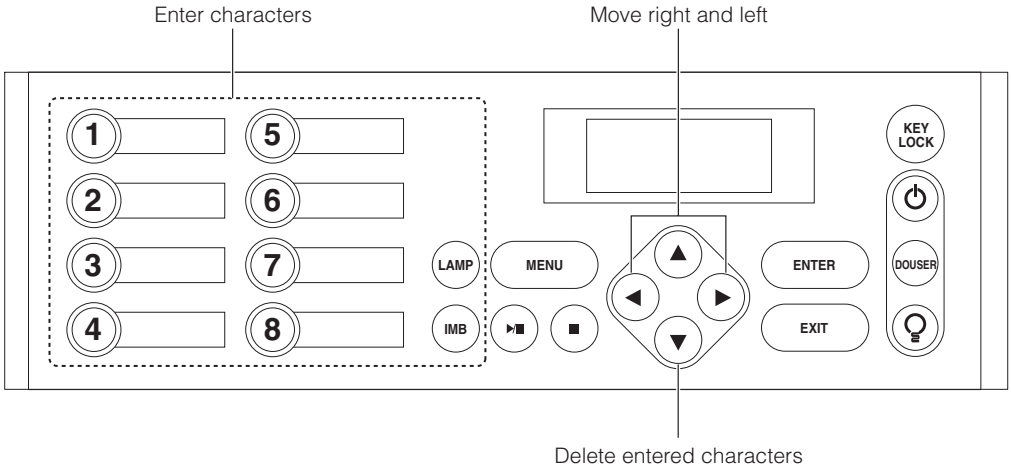

Characters can be entered by pressing each button as shown in the following table.

- To delete a character during entry, press the DOWN button.

[Example of Entry]

To enter “XGA” for example, use the following procedure:

(1) Press the “8” button three times.
V → W → X

(2) Press the RIGHT button.

(3) Press the “3” button.
XG

(4) Press the RIGHT button.

(5) Press the “1” button.
XGA

Button	Entered character
1	A → B → C → 1 → a → b → c → ! →
2	D → E → F → 2 → d → e → f → " →
3	G → H → I → 3 → g → h → i → # →
4	J → K → L → 4 → j → k → l → $ →
5	M → N → O → 5 → m → n → o → % →
6	P → Q → R → 6 → p → q → r → & →
7	S → T → U → 7 → s → t → u → ’ →
8	V → W → X → 8 → v → w → x → (→
LAMP	Y → Z → / → 9 → y → z → ? →) →
IMB	* → , → . → 0 → ; → : → + → - →

NOTE To input characters using the remote control, only numbers can be entered with [password] and the security [keyword].

4-2. Table of adjustment menus

Menus in parentheses are menus for our service personnel. Normally, these menus cannot be used.

Main menu	Submenu		Description	Reference page
Title Select	“Title Memory Name”		Selects the title of the signal to be projected.	37
	TEST Pattern		Selects the test pattern to be projected.	37
Configuration	Lamp Setup	Adjust	Adjusts lamp brightness.	38
		Feedback	Sets the lamp brightness constant mode that uses a brightness sensor.	38
	Lens Control	Lens Position	Adjusts the position of the projected screen.	38
		Focus Zoom	Fine tunes the size and focus of the projected screen.	38
	(Setup)	Douser Mode	Selects whether to use the douser (screen mute) when switching signals.	-
		PowerOn Douser	Sets the douser status (ON/OFF) when the projector is turned on.	-
		Turret	Controls the turret mounted with an anamorphic lens (or wide converter lens).	-
		Panel Key Lock	Locks the buttons on the projector’s control panel so that they cannot be operated.	-
		Auto Key Lock	Enables or disables Auto Key Lock.	-
		3D Connector	Sets the signal input terminal for a 3D image system (3D terminal or GPI/O terminal).	-
		FactoryDefault	Returns the settings to their default values. Selects between preset buttons and titles only, LAN settings only and all settings.	-
	(Installation)	(Option Slot)	Configures the device installed in slot A and slot B (only when the projector is in standby mode).	-
		Image Orient	Selects the projection method (front/rear).	-
		Lens Center	Moves the lens shift position to the center.	-
		MMS Select	Selects the multi-media switcher (MMS) to connect.	-
		Baudrate	Sets the PC control connector (RS-232C) data transmission speed (bps).	-
		Date/Time	Sets the date and time on the projector.	-
		(New Bulb)	Resets the lamp bulb usage time and selects or edits new entries (only when the projector is in standby mode).	-
		(Bulb Warning)	Sets the lamp bulb warning time (only when the projector is in standby mode).	-
		(New Lamp house)	Resets the lamp house usage time, and makes settings or selects modes (only when the projector is in standby mode).	-
		Bulb Alignment	Sets the lamp bulb alignment.	-
		Usage Reset	Initializes the usage time of the fan and air filter.	-
		NewRouterSetup	Sets the router with the default settings when the router built-in the projector has been replaced.	-
	(Memory)	Lamp	Saves the current lamp setting.	-
		Lens	Saves the current lens setting.	-
(Title Setup)	Preset Button	Preset Button 1-8	Sets the title to be assigned to the preset buttons (<1> to <8> buttons).	39
Information	Lamp	Output	Displays the lamp output setting.	39
		Bulb Type [A]	Displays the registered name and the maximum/minimum current setting of the currently used lamp bulb.	39
		Bulb Type [W]	Displays the registered name and the lamp rated output (kW) of the currently used lamp bulb.	39
		Bulb Type [H]	Displays the registered name and the lamp bulb warning time (Bulb Warning Time) setting of the currently used lamp bulb.	39
	Preset Button	Preset Button 1-8	Displays the titles which are assigned to the preset buttons (<1> to <8> buttons).	40
	Usage		Displays the usage time of the projector, lamp bulb, lamp house, bulb warning, fan, and air filter.	40
	Error Code		Displays the currently occurring error.	40
	Version	System	Displays the model and version (BIOS, firmware, data, and serial No.) of the projector.	41
		SIB	Displays the version of the signal input board (NC-80LB01).	41
		IMB	Displays the version of the media block (IMB).	41
		MMS(Built-in)	Displays the version of the built-in multi-media switcher (MMS). (BIOS, Firmware, Data, FPGA, and Serial No.)	41
	IP Address	System	Displays the IP address of the projector.	42
	Setup Date		Displays the date when the projector was set up (starting date of the warranty period).	42
	Option Status		Displays the link status of the device mounted in slot A and slot B, and the projector.	42

4-3. Title Select

4-3-1. Title select (Title Memory)

Selects the title of the signal to be projected.
You can register up to 100 titles. You can also assign registered titles to the preset buttons (<1> to <8> buttons) on the projector's control panel and call them up directly using those buttons.
Request your dealer/distributor for details on registering and changing titles.

← Displays the currently selected item with asterisk (*).
← Selects the title to be projected.

4-3-2. Test Pattern

Selects the test pattern to be projected.

← Displays the currently selected item with asterisk (*).
← Selects the test pattern to be projected.

OFF, Alignment, Convergence, H-Ramp, RGB-Black, RGB-Blue, RGB-Green, RGB-Red, RGB-White, Y-Color Bars, YCbCr-Blue, YCbCr-Green, YCbCr-Red, YCbCr-White, RGB-CROSS, RGB-50%-White

4-4. Configuration

Please request your dealer/distributor to perform the settings.

4-4-1. Lamp Setup

Adjust

Adjusts the lamp output (brightness). Control the output at 10 W increments.

← Displays the lamp output (%) with regard to the setting.
← Adjusts the lamp brightness.

Feedback

Sets the lamp brightness constant mode that uses a brightness sensor.

← Displays the currently selected item with asterisk (*).
← Displays the setting.

Disable	Disables the lamp brightness constant mode.
Enable	Enables the lamp brightness constant mode.

4-4-2. Lens Control

Adjust the position, size, and focus of the projected screen.
Press the ENTER button to switch the display between “Lens Position” and “Focus Zoom” adjustments. Press the EXIT button to return to a menu one level above.

Lens Position

Adjusts the position of the projected screen.
The projected screen moves in the selected direction as you press the UP/DOWN/LEFT/RIGHT button.

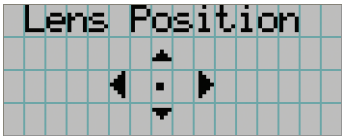

Focus Zoom

Fine tunes the size (Zoom) and focus (Focus) of the projected screen.
Press the UP/DOWN button to adjust the focus.
Press the LEFT/RIGHT button to adjust the size of the projected screen.

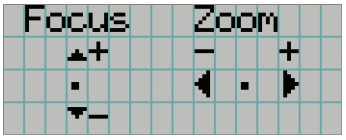

4-5. Title Setup

Sets the title to be assigned to the preset buttons (<1> to <8> buttons).
Request your dealer/distributor to perform the settings.

4-6. Information

Displays the hours of lamp bulb use, the version information and error codes.

4-6-1. Lamp

Displays information relating to the lamp. (Such as lamp output and the information of lamp bulb.)

Output

Displays the lamp brightness (output) setting.

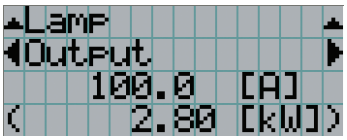

← Displays the set current (A).
← Displays the power consumption (kW).

Bulb Type [A]

Displays the registered name and the maximum/minimum current setting of the currently used lamp bulb.

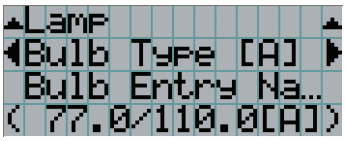

← Displays Bulb Entry registered name.
← Displays Bulb Entry maximum/minimum currents (A).

Bulb Type [W]

Displays the registered name and the lamp rated output (kW) of the currently used lamp bulb.

← Displays Bulb Entry registered name.
← Displays Bulb Entry lamp rated output (kW).

Bulb Type [H]

Displays the registered name and the lamp bulb warning time (Bulb Warning Time) and setting of the currently used lamp bulb.

← Displays Bulb Entry registered name.
← Displays Bulb Warning Time setting (H).

4-6-2. Preset Button

Sets the title to be assigned to the preset buttons (<1> to <8> buttons) on the projector's control panel.

← Selects the preset button number whose contents you want to display.
← Displays the assigned title numbers.
← Displays the registered names of the assigned titles.

4-6-3. Usage

Displays the hours of projector head, lamp, and lamp house usage, and warning display time of the lamp bulb.

← Selects the item to display.

← Displays the hours of use (H).

Projector	Displays the hours of projector head use.
Bulb	Displays the hours of use of the current lamp bulb (Lamp utilization time).
Lamp house	Displays the hours of use of the current lamp house.
Bulb Warning	Displays the currently enabled warning time. The following is displayed depending on the item set by the Bulb Warning setting. • When Use Bulb Entry is enabled: Displays the Bulb Entry value. • When in Manual setting: Displays the value set using Manual.
AC On Fan	Displays the usage time (on the AC power supply) of the projector cooling fan.
Power On Fan	Displays the usage time (on the projector's power supply) of the projector cooling fan.
Lamp Fan	Displays the usage time of the lamp cooling fan.
Filter	Displays the usage time of the air filters (for the projector head and for the lamp).

4-6-4. Error Code

Displays the error code when an error occurs. See the "Error Code List" in the Appendix for details on error codes.

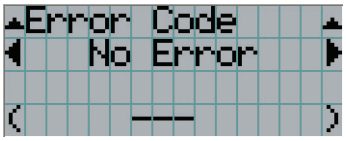

← Displays the code of the error currently occurring.

← Displays the name of the error currently occurring.

When multiple errors occur, you can display them by pressing the LEFT/RIGHT buttons.

4-6-5. Version

Displays the versions of the projector head, and the multi-media switcher (MMS) (optional).

System

Displays the version information of the projector head.

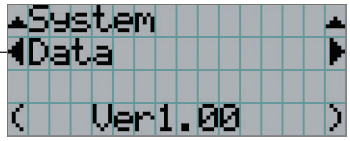

← Selects the item to display.

← Displays the version information.

BIOS	Displays the BIOS version of the projector head.
Firmware	Displays the firmware version of the projector head.
Data	Displays the data version of the projector head.
Serial No.	Displays the serial number of the projector head.
Model	Displays the model name of the projector head.

SIB

Displays version information of the signal input board (NC-80LB01).

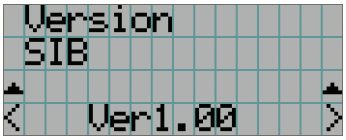

← Displays the version information.

IMB

Displays the version information of the media block.

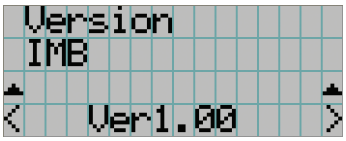

← Displays the version information.

MMS (Built-in)

Displays the version of the built-in multi-media switcher (MM3000B) connected to the projector head.

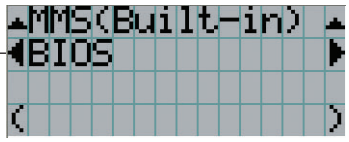

← Selects the item to display.

← Displays the version information.

BIOS	Displays the BIOS version of the built-in multi-media switcher (MM3000B).
Firmware	Displays the firmware version of the built-in multi-media switcher (MM3000B).
Data	Displays the data version of the built-in multi-media switcher (MM3000B).
FPGA	Displays the FPGA version of the built-in multi-media switcher (MM3000B).
Cfg FPGA	Displays the configuration FPGA version of the built-in multi media switcher (MM3000B).
Serial No.	Displays the serial number of the built-in multi-media switcher (MM3000B).

4-6-6. IP Address

Displays the IP address set in the projector head.

← Displays the IP address.

System	Displays the IP address set for the projector head (System).

4-6-7. Setup Date

Displays the date when the projector was set up (starting date of the warranty period).

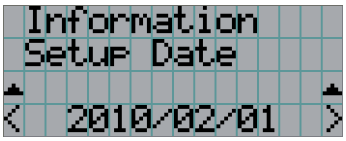

← Displays the date when the projector was set up (starting date of the warranty period).

4-6-8. Option Status

Displays the link status of the device mounted in slot A and slot B (signal input board, multi-media switcher, or media block) on the projector.

Normally the device name mounted in slot A and slot B are displayed. The device name is displayed in ( ) when the projector is in standby or when connection to the device cannot be confirmed.

← Displays the link status of the device in slot B.

← Displays the link status of the device in slot A.

B	Displays the link status of the device in slot B. • SIB: Signal input board • IMB: Media block • No Board: No device mounted
A	Displays the link status of the device in slot A. • MMS: Multi-media switcher • IMB: Media block • No Board: No device mounted

5. Maintenance of Your Projector

NOTE Please request your dealer to perform lamp replacement and cleaning of the projector inside.

5-1. Cleaning the Cabinet

Be sure to always check that the AC power supply of the projector head is disconnected before carrying out maintenance of your projector.

- Wipe with a dry, soft cloth without nap.
  When the cabinet is excessively dirty, wipe with cloth well wrung after being dampened with a neutral detergent diluted with water and then finish up with a dry cloth.
  When you use a chemical dust cloth, follow the instructions in the manual attached to it.
- Do not use a solvent, such as thinner or benzene. The coating may deteriorate or peel off.
- When removing dust on the ventilation opening, suck it off using an adapter with a brush on a vacuum cleaner. Never allow the cleaner without an adapter to come into direct contact or use a nozzles adapter in cleaning.
- Clean the ventilation opening at regular intervals. Dust, if allowed to accumulate there, may cause heating inside, which leads to functional trouble. The interval, which can vary with the location of your projector, is about 100 hours.
- Do not damage the cabinet by scratching it or allowing hard objects to hit it. This can scratch the projector.
- Consult your dealer/distributor about cleaning the inside of the projector.

NOTE Do not allow insecticide or other volatile liquid to splash on the cabinet, lens or screen. Also, do not allow any rubber or plastic object to remain in contact with the cabinet for a long time. The coating may deteriorate or peel off.

5-2. Cleaning the Lens

Clean the lens the same way as with camera lens (using a commercially available camera blower or cleaning paper for glasses). Take care not to damage the lens when cleaning.

5-3. Replacing the Air Filter

Air filters are attached over the air inlet of the projector to prevent dust. Replace air filters periodically to maintain the projector's performance.

WARNING:

- When replacing air filters, turn off the projector and shut down the AC power to the projector using a circuit breaker.
- Dust in air filters will hinder ventilation of the projector, lead to a rise of the internal temperature and may cause a fire or malfunction.

NOTE Please purchase the replacement air filter at your dealer/distributor. Specify NC-80AF01 (for the air inlet of the lamp) or NC-80AF02 (for the air inlet of the projector electric circuit) when you order.

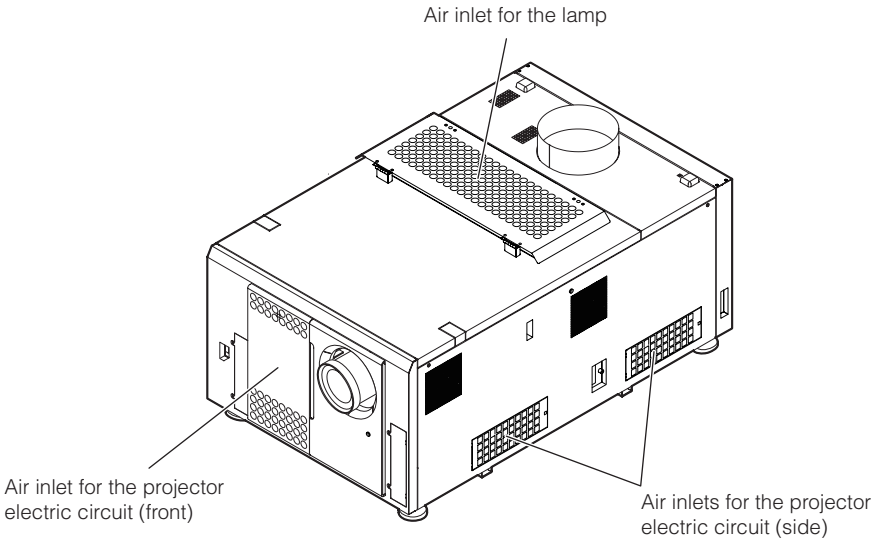

Air inlet	Model number	Replacement frequency
Lamp air inlet	NC-80AF01	When replacing the lamp
Projector air inlet	NC-80AF02	Every 2,000 hours of usage or 6 months, whichever is earlier

5-3-1. Replacing air filters for the lamp air inlet

Prepare the optional NC-80AF01 to replace air filters for the lamp air inlet. The NC-80AF01 contains six replacement air filters. Three air filters are required for the lamp air inlet.

1 Turn off the power to the projector.

2 Open the air inlet cover.

The air inlet cover is fastened by a leg on the top left corner of the cover when the project is facing towards you. Lift the leg up to open the air inlet cover.

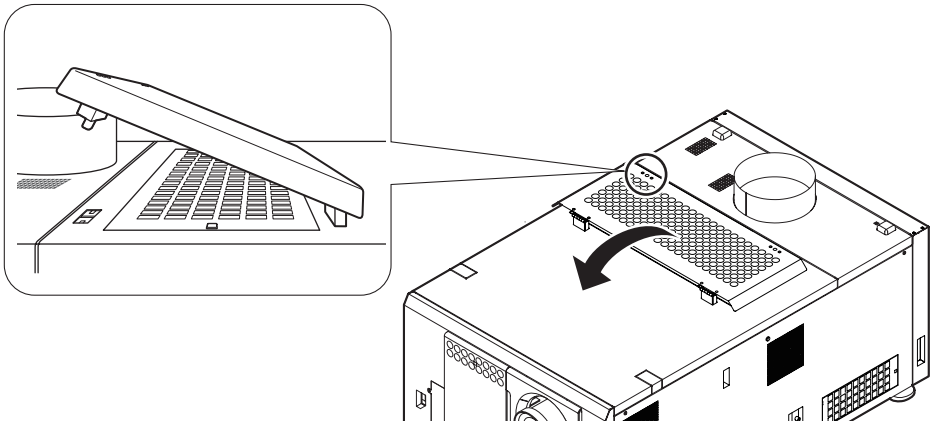

NOTE Take care not to damage the upper surface of the projector when opening the air inlet cover.

3 Remove the filter cover.

Push the latch until it clicks to unlock the filter cover.

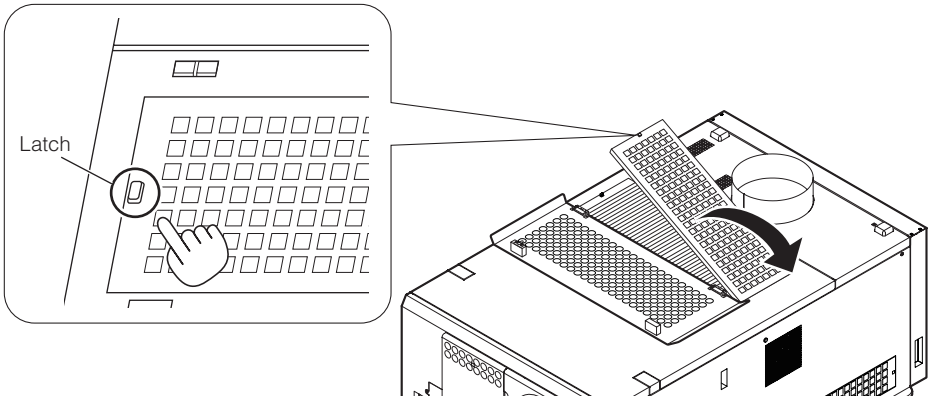

4 Replace with new air filters.

Look for an arrow indicating the installation direction on the side of the air filter. Place the filter so that the arrow is pointing down at the projector.

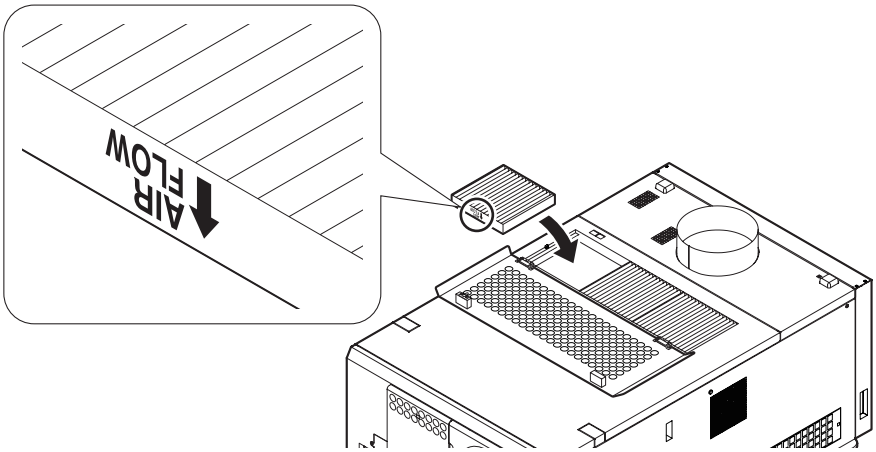

5 Mount the filter cover.

Align two fasteners on the filter cover to holes on the projector, and push in until the latch clicks to mount the filter cover.

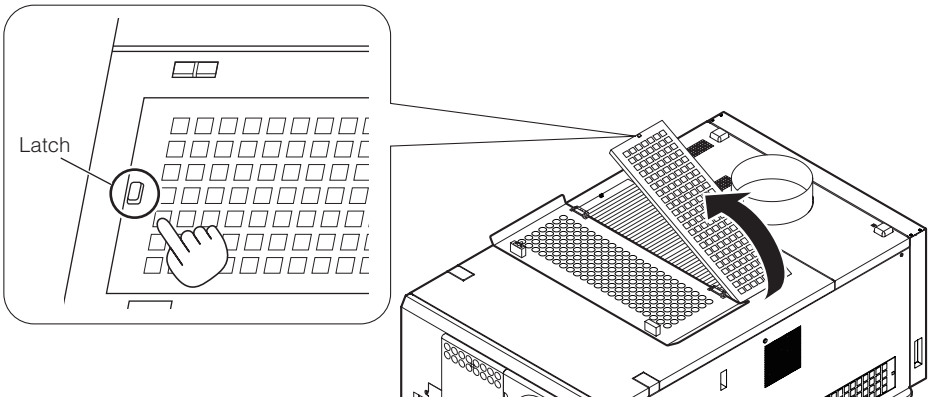

6 Close the air inlet cover.

Fasten the air inlet cover by inserting the protrusion on the top left leg into the hole on the projector when the projector is facing towards you.

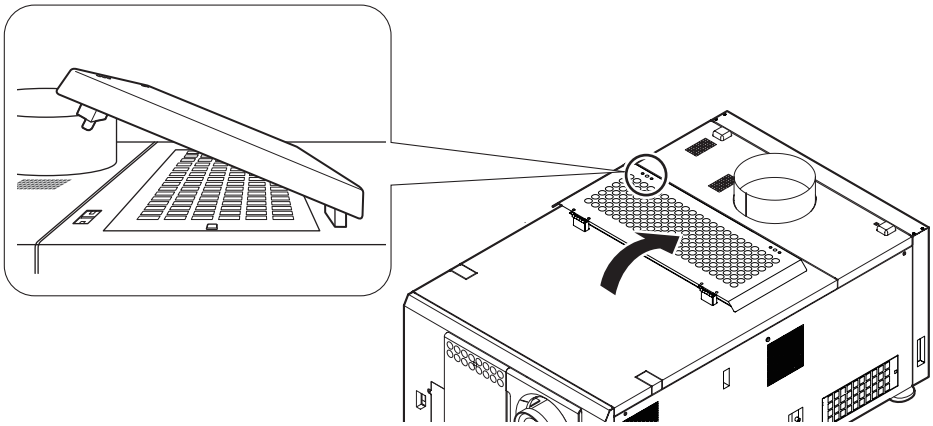

This completes replacement of the air filters for the lamp air inlet.

5-3-2. Replacing air filters for the projector air inlet on the front

Prepare the optional NC-80AF02 to replace air filters for the projector air inlet on the front. The NC-80AF02 contains four replacement air filters. Two air filters are required for the projector air inlet on the front.

1 Turn off the power to the projector.

2 Remove the air inlet cover.

Push the latch until it clicks to unlock the air inlet cover. The air inlet cover is attached to the projector by the bottom edge.

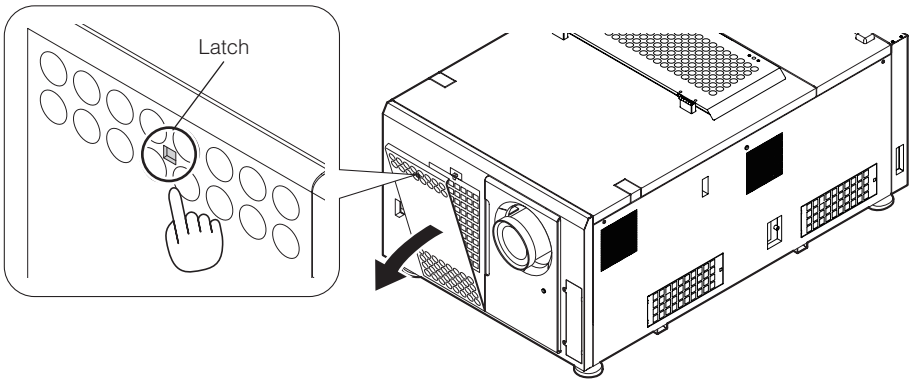

NOTE Take care not to drop the cover when removing the air inlet cover.

3 Remove the filter cover.

Push the latch until it clicks to unlock the filter cover.

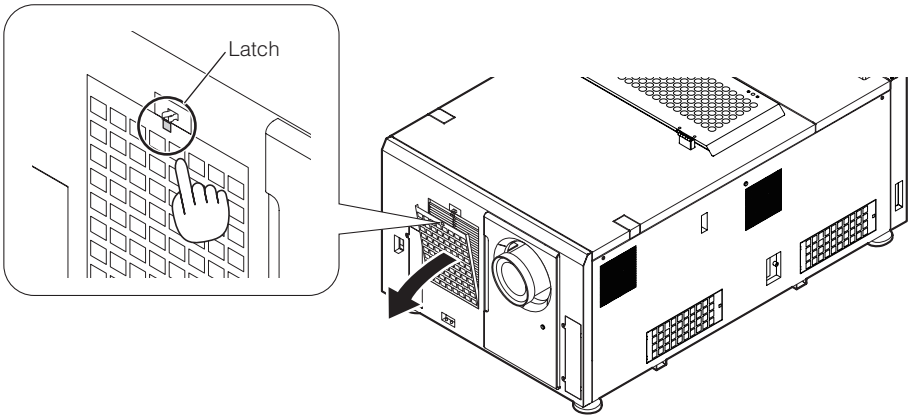

4 Replace with new air filters.

Look for an arrow indicating the installation direction on the side of the air filter. Place the filter so that the arrow is pointing down at the projector.

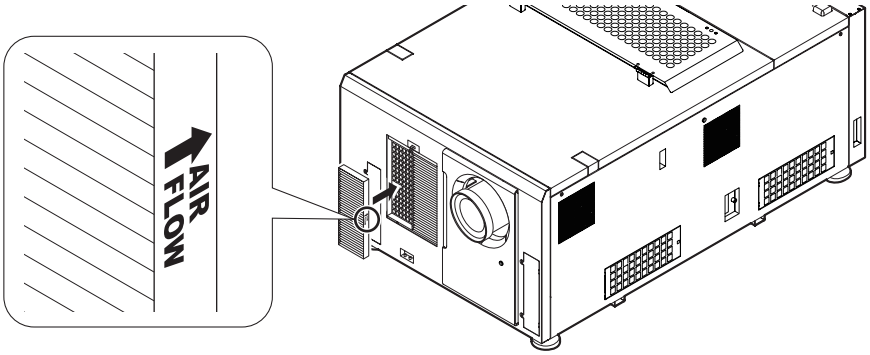

5 Mount the filter cover.

Align two fasteners on the filter cover to the holes on the projector, and push in until the latch clicks.

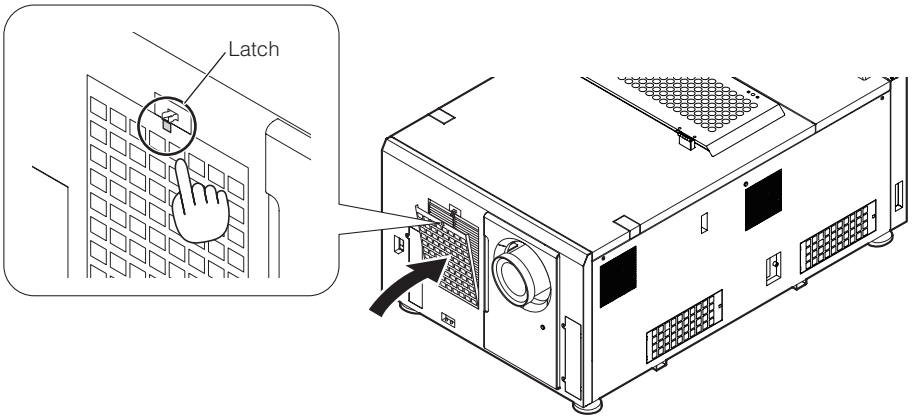

6 Mount the air inlet cover.

Align the catches on the bottom of the air inlet cover with the protrusions on the projector, and push in until the latch clicks to mount the air inlet cover.

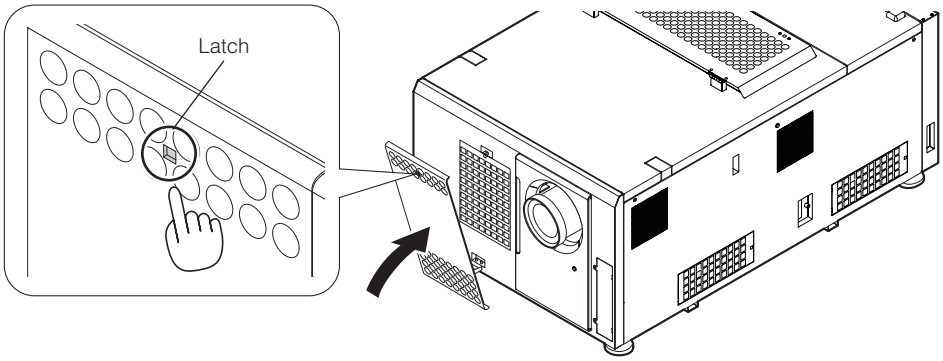

This completes replacement of the air filters for the projector air inlet on the front.

5-3-3. Replacing air filters for the projector air inlets on the side

Prepare the optional NC-80AF02 to replace air filters for the projector air inlets on the side. The NC-80AF02 contains four replacement air filters. Two air filters (one each for two air inlets) are required for the projector air inlets on the side.

1 Turn off the power to the projector.

2 Remove the filter cover.

Push the latch until it clicks to unlock the filter cover.

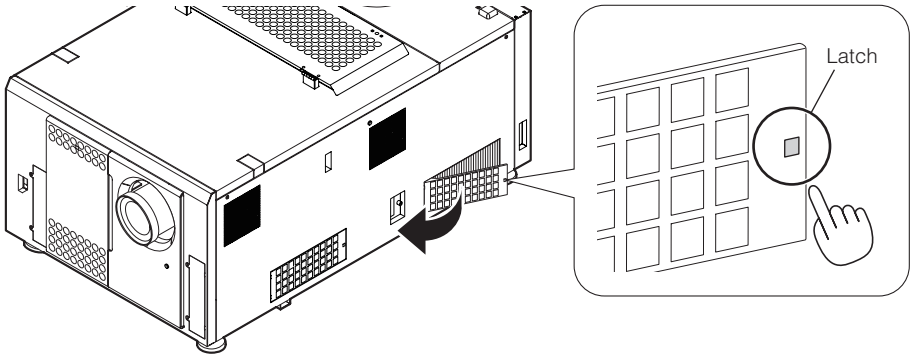

3 Replace with new air filters.

Look for an arrow indicating the installation direction on the side of the air filter. Place the filter so that the arrow is pointing down at the projector.

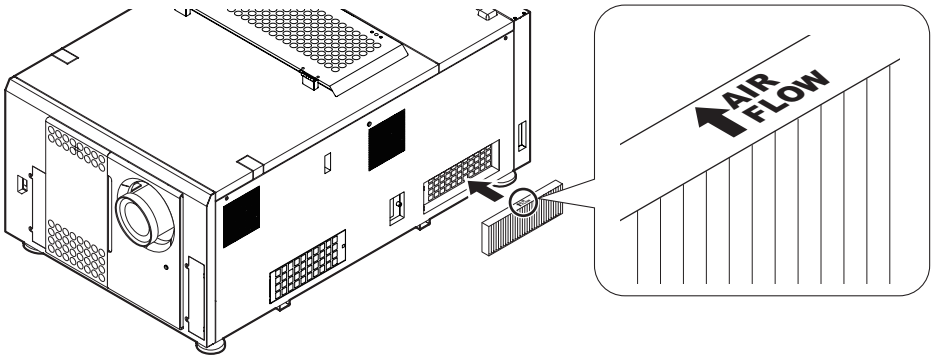

4 Mount the filter cover.

Align two fasteners on the filter cover to the holes on the projector, and push in until the latch clicks.

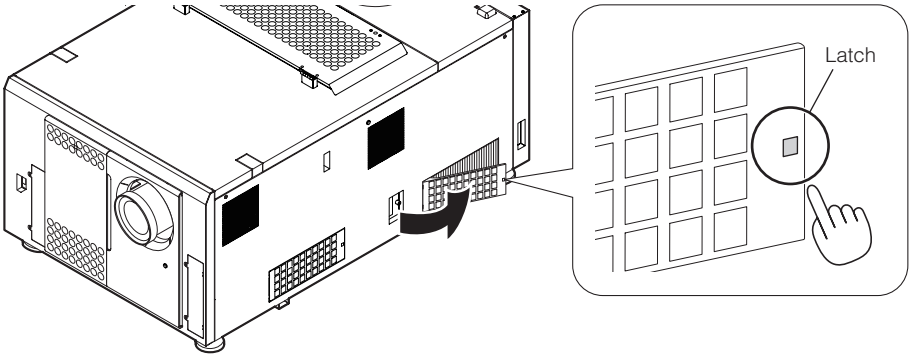

5 Repeat Step 2 to 4 to replace one more air filter.

This completes replacement of the air filters for the projector air inlets on the side.

6. Appendix

6-1. Troubleshooting

Before asking for repair, please check your connection, settings and operation once again. If the trouble cannot be corrected, please contact your dealer/distributor for instructions or repair.

6-1-1. Problems and where to check

Problem	Check these items
The projector cannot be turned on.	Check to see if AC power is supplied to the projector.
	Make certain that the main power switch is ON.
	Check to see whether the panel key lock function is activated. If so, the main unit's control buttons are locked and do not work.
	Is the temperature inside the projector too high? When the inside temperature is too high, the protective function does not allow your projector to be turned on. Wait some time and then turn it on.
The image cannot be projected.	Check to see if the connected input has been selected.
	Check to see if a cable is properly connected to the input terminal.
	Check to see whether the douser is closed.
	Check to see if the settings are all adjusted properly.
The image is distorted.	Check to see if the protractor is properly set up.
The image is blurred.	Make certain that the lens is properly focused.
	Check to see if the screen and a projector are installed at correct angles.
	The projection distance may be larger than the focusing range.
	See if the lens and other parts have condensation on them. If the projector is turned on in a warm place after storage in a cold place, the lens and other optical components inside may develop condensation. In such a case, please wait several minutes until the condensation disappears.
Video image is disturbed	Check whether the signal cable connected to the projector is disconnected.

Problem	Check these items
The STATUS indicator blinks in red.	Your projector may have trouble. Please contact your dealer/distributor for instructions.
An error code is displayed.	Please contact your dealer/distributor for instructions.

6-2. Indicator display list

See the descriptions below when any of four buttons on the control panel or the Rear STATUS indicator on the rear of the projector is lit or blinking. The projector also has a warning function that uses a buzzer.

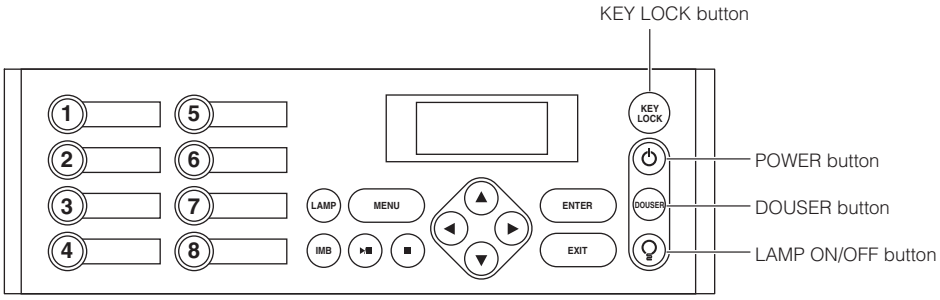

6-2-1. KEY LOCK button

Indicator condition		Projector condition	Note
Steady light	White	The key lock is off.	-
	Orange	The key lock is on.	-

6-2-2. POWER button

Indicator condition		Projector condition	Note
Off		The project power supply is off.	-
Blinking light	Green	The projector is starting up.	Wait for a moment.
	White	The projector is cooling down.	Wait for a moment.
Steady light	Green	The projector is turned on.	-
	White	The projector is in standby.	-

6-2-3. DOUSER button

Indicator condition		Projector condition	Note
Blinking light	White	The douser is closed.	-
Steady light	Green	The douser is opened.	-

6-2-4. LAMP ON/OFF button

Indicator condition		Projector condition	Note
Blinking light	White	The lamp is off.	-
Steady light	Green	The lamp is on.	-

6-2-5. Rear STATUS indicator

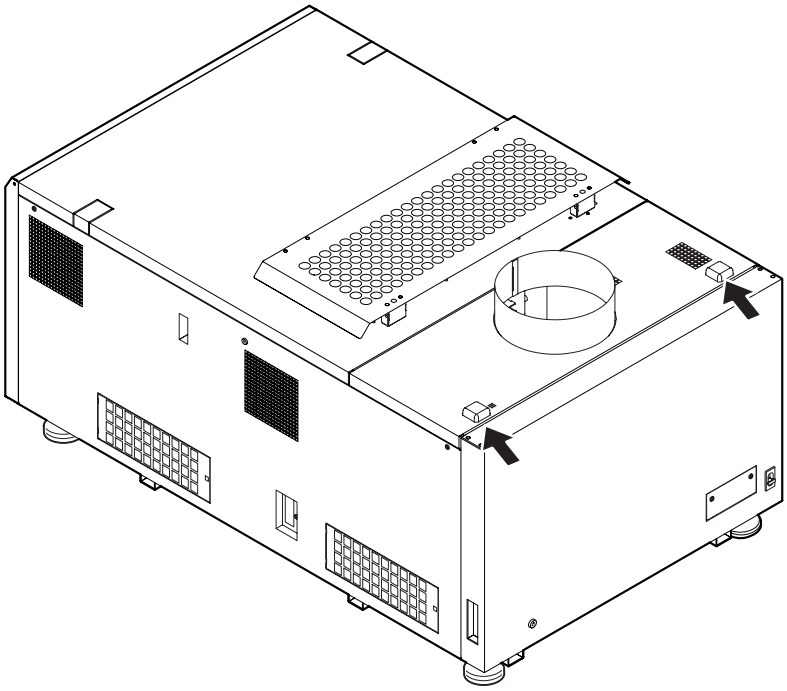

Indicator condition		Projector condition	Note
Off		Main power is off.	-
Blinking light	Green	The projector is getting ready to turn on. The douser is closed. The lamp is off.	Wait for a moment.
	Orange	The projector is cooling down.	Wait for a moment.
	Red (With buzzer)	Safety problem, error	An error message is displayed in the LCD screen. Check the content of the error.
	Red (Without buzzer)	Error with possible image project under certain conditions.	
Steady light	Green	The projector is turned on.	-
	Orange	The projector is in standby.	-
	Red	Error at a level with not affect on projection.	An error message is displayed in the LCD screen. Check the content of the error.

6-3. Operation using an HTTP browser

6-3-1. Overview

The use of HTTP server functions will allow control of the projector from a web browser. Please be sure to use " Microsoft Internet Explorer 4.x" or a higher version for the web browser.
This device uses "JavaScript" and "Cookies" and the browser should be set to accept these functions. The setting method will vary depending on the version of the browser. Please refer to the help files and the other information provided in your software.

NOTE The display's or button's response can be slowed down or operation may not be accepted depending on the settings of your network.
Should this happen, consult your network administrator.
The projector may not respond if its buttons are repeatedly pressed in rapid intervals. Should this happen, wait a moment and repeat. If you still cannot get any response, pull out and then reinsert the LAN card on the projector.
Access is gained to the HTTP server functions by and specifying
http://<the projector's IP address>/index.html
in the entry column of the URL.

6-3-2. Preparation before use

Make network connections and set up the projector and confirm that it is complete before engaging in browser operations.
Operations with a browser that uses a proxy server may not be possible depending on the type of proxy server and the setting method. Although the type of proxy server will be a factor, it is possible that items that have actually been set will not be displayed depending on the effectiveness of the cache, and the contents set from a browser not be reflected in operation. It is recommended that a proxy server not be used unless it is unavoidable.

6-3-3. Handling of the address for operation via a browser

Regarding the actual address that is entered for the address or entered to the URL column when operation of the projector is via a browser, the host name can be used as it is with the host name corresponding to the IP address of the projector has been registered in the domain name server by a network administrator, or the host name corresponding to the IP address of the projector has been set in the "HOSTS" file of the computer being used.

(Example 1) When the host name of the projector has been set to "pj.nec.co.jp"

http://pj.nec.co.jp/index.html is specified for the address or the entry column of the URL to access HTTP server functions.

(Example 2) When the IP address of the projector is "192.168.10.10"

http://192.168.10.10/index.html is specified for the address or the entry column of the URL to access HTTP server functions.

6-3-4. Structure of the HTTP server

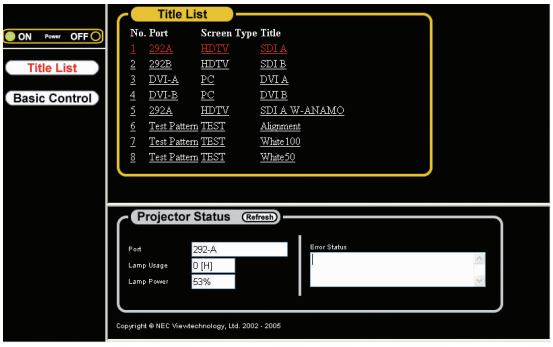

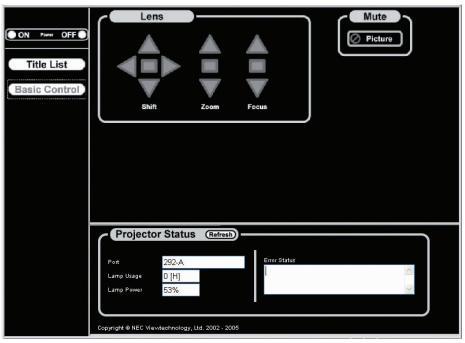

Power		Controls the power to your projector. • On: Turns the power on. • Off: Turns the power off.
Title List		Displays titles set in the projector (such as input port, screen type, and title). Check, and the title will be changed.
Basic Control		Displays the basic control items.
Lens		Controls the lens operation.
	Shift	▲ : Shifts the projected screen upward. ▼ : Shifts the projected screen downward. ◀ : Shifts the projected screen leftward. ▶ : Shifts the projected screen rightward. ■: Stops the shifting. Shifting can also be stopped by clicking the same button one more time.
	Zoom	▲ : Zooms up the lens. ▼ : Zooms down the lens. ■: Stops the zooming. Zooming the can also be stopped by clicking the same button one more time.
	Focus	▲ : Focuses up the lens. ▼ : Focuses down the lens. ■: Stops the focusing. Focusing can also be stopped by clicking the same button one more time.
Mute	Picture	Click and the douser closes and the projected picture disappears. Click once again and the picture will be projected again.
Projector Status		Displays the condition of the projector. • Port: Displays the input port of the selected title. • Lamp Usage: Displays the hours of lamp use. • Lamp Power: Displays lamp output (%). • Error Status: Displays the status of errors occurring within the projector. • Refresh: Updates the display of the following conditions.

6-4. Outline Drawing

6-4-1. Projector head (NC3200S)

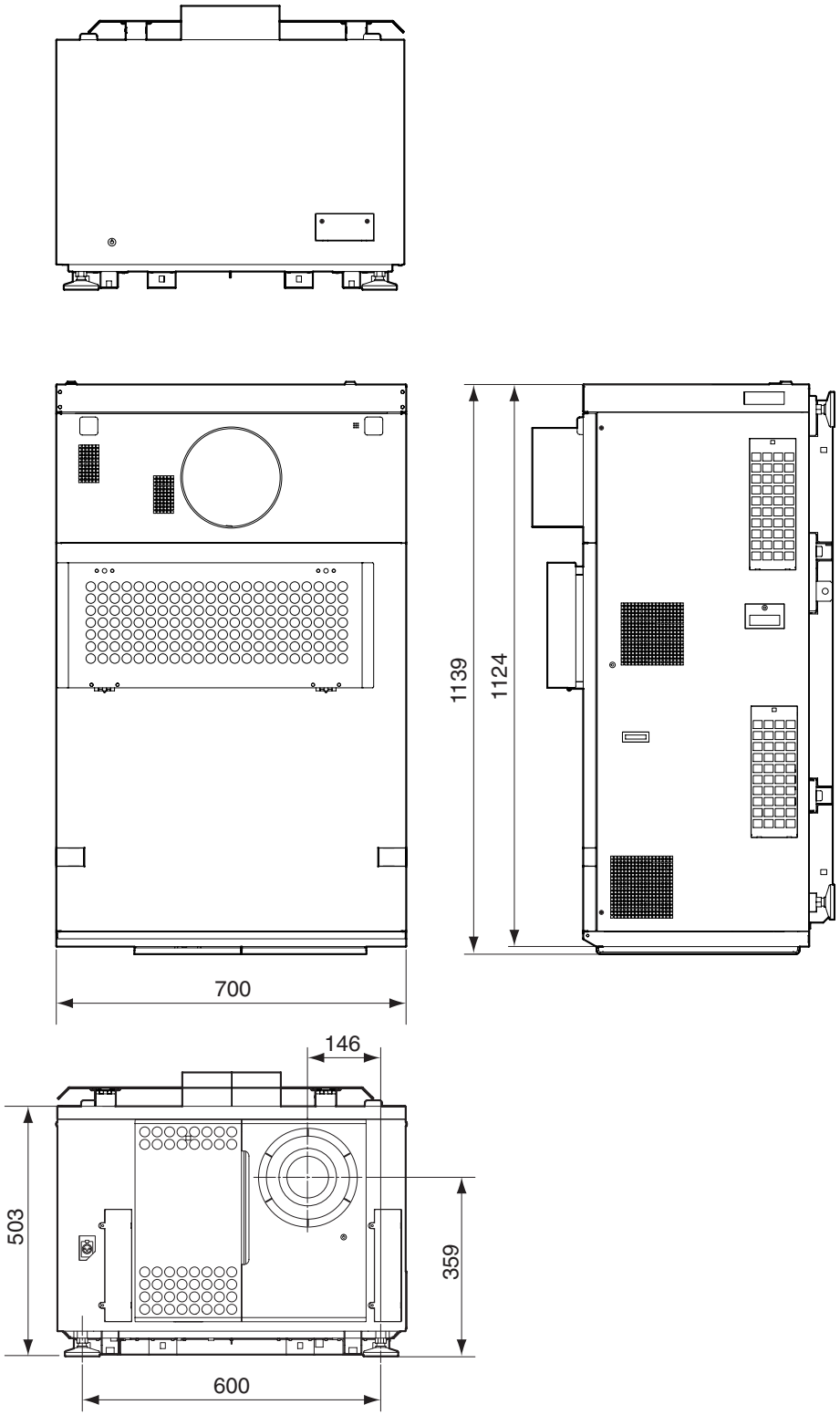

Units: mm

6-4-2. Lamp power supply (NC-32PS01)

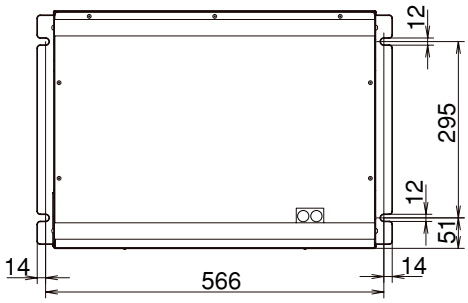

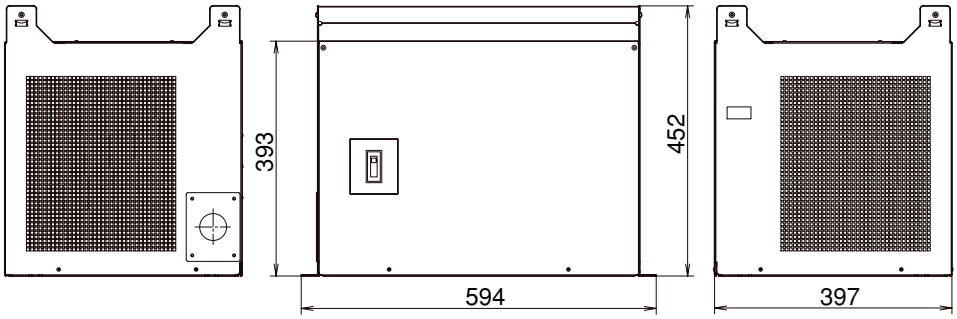

Units: mm

6-5. Specifications

Model No.	NC3200S	
Projection method	3 chip DLP Cinema® method (1.25-inch DC2K chip)	
Panel resolution	2048 x 1080	
Lamp type	4.5/6.0/7.0 kW xenon lamp (Note 1)	
Screen sizes	15 m to 30 m (Width) (Depends on setup conditions)	
Contrast ratio	2200:1 or above	
Lens adjustment function	Motorized lens shift (vertical/horizontal), motorized zoom, motorized focus, douser	
Signal input ports (Note 2)	Slot B	Signal input board (NC-80LB01) mounted as standard SDI (4) BNC (SMPTE 292M, 372M) RGB DIGITAL (2) DVI-D 24pin (TMDS specification)
	Slot A	When shipped from factory: Empty (for mounting optional components)
External Control	RS-232C D-sub 9 pin x 1 GPIO port D-sub 37 pin x 1 Remote control input port stereo mini jack x 1 3D CTL D-sub 15 pin x 1 USB Type A x 1 Interlock port x 1 Ethernet port G-bit RJ-45 x 1 Anamorphic Lens Turret control port x 1	
Power supply voltage	Projector head	AC100 to 240 V, 50/60 Hz single phase
	Lamp power supply	AC200-230 V, 50/60 Hz Three-phase (Star connection) AC380-415 V, 50/60 Hz Three-phase (Star connection) Switch type
Input current	Projector head	7 A
	Lamp power supply	28 A (200 to 230 V), 17 A (380 to 415 V)
Consumption	Projector head	0.7 kW
Power	Lamp power supply	9.7 kW
Cooling method	Cooling fluid system, Cooling air system (includes dust filter)	
Noise level	Less than 66 dB	
Installation	Orientation:Desktop/front, Desktop/rear	
Net weight	Projector head	99 kg (Excluding lens)
	Lamp power supply	52 kg
Dimensions	Projector head	700 mm (W) x 1124 mm (D) x 503 mm (H) (Does not include protruding portions Includes foot)
	Lamp power supply	594 mm (W) x 397 mm (D) x 452 mm (H)
Environment	Operating temperature: 10 to 35 ˚C Operating humidity: 10 to 85% (non-condensing) Storage temperature: -10 to 50 ˚C Storage humidity: 10 to 85%	
Regulations		<Safety> / <EMC>
	USA	UL60950-1 / FCC Class A
	Canada	CSA60950-1 / ICES-003 Class A
	Europe	EN60950-1 / EN55022 Class A EN55024
	Oceania	IEC60950-1 / AS/NZS CISPR.22 Class A
	Japan	J60950 / VCCI Class A
	Asia	IEC60950-1 / CISPR. 22

(Note 1) Using any lamp other than NEC's optional lamps will result in lower brightness compared to NEC optional lamps. If brightness is important to you, it is recommended that you use NEC's optional lamps.
NEC will post information on its homepage regarding installable lamps, other than NEC's optional lamps. Note that NEC does not guarantee performance and reliability when lamps other than NEC's optional lamps are installed.

(Note 2) In addition to the input ports described above that are mounted when the device is shipped, Image Media Block and Multi Media Switcher are available as separate optional products. A wider variety of input interfaces can be supported by mounting these in slot A.

* Note that these specifications and design can change without prior notice.

6-6. Pin Assignment and Functions of Terminal

6-6-1. PC CONTROL connector (RS-232) (D-Sub 9 pin)

This is an RS-232C interface for controlling the projector head from a PC. The projector operates as a DCE (Data Communication Equipment), so use a straight cable when connecting to a PC.

Pin No.	RS-232C Signal Name	Functions as RS-232C	Projector Connector Operation
1	CD	Carrier detection	Not used (N.C.)
2	RXD	Reception data	Data transmission to an external device
3	TXD	Transmission data	Data reception from an external device
4	DTR	Data Terminal ready (Note 1)	Connection to 6 pins
5	GND	Signal GND	Signal GND
6	DSR	Data set ready (Note 1)	Connection to 4 pins
7	RTS	Transmission request	SYSTEM (Note 2): Hi-Z (Not used) CINEMA (Note 2): Hi-Z (Used)
8	CTS	Transmission available	SYSTEM (Note 2): Fixed at -6.5 V (Not used) CINEMA (Note 2): ± 10.5 V (Used: Depends on communication status)
9	RI	Ring indicator	Not used (N.C.)

Note 1: Do not use DTR and DSR signals when communicating.
Note 2: Connector operations vary according to the PC control signal switch (CINEMA/SYSTEM). (When in SYSTEM, do not use RTS and CTS signals.)

6-6-2. External control connector (GP I/O) (D-Sub 37 pin)

It is possible to control the projector with an external device and to control the external device from the projector using an external control connector (GPIO: General Purpose I/O Ports). Each pin is electrically separated from the projector internal circuits by a photo-coupler. 8 port input and 8 port output are available.
Please contact your dealer/distributor regarding how to use and to operate them.

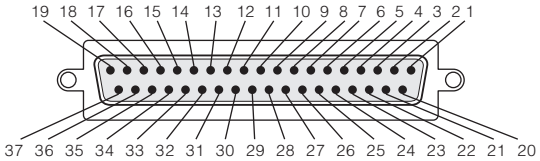

Pin view of female connector

Pin No.	Signal Name	I/O	Pin No.	Signal Name	I/O
1	GPIN1+ (3D L/R Input Reference +)	IN	20	GPIN1- (3D L/R Input Reference -)	IN
2	GPIN2+ (3D L/R Display Reference +)	IN	21	GPIN2- (3D L/R Display Reference -)	IN
3	GPIN3+ (system reserved)	IN	22	GPIN3- (system reserved)	IN
4	GPIN4+ (system reserved)	IN	23	GPIN4- (system reserved)	IN
5	EXT_GPIN1+ (Control and Title Selection +)	IN	24	EXT_GPIN1- (Control and Title Selection -)	IN
6	EXT_GPIN2+ (Control and Title Selection +)	IN	25	EXT_GPIN2- (Control and Title Selection -)	IN
7	EXT_GPIN3+ (Control and Title Selection +)	IN	26	EXT_GPIN3- (Control and Title Selection -)	IN
8	EXT_GPIN4+ (Control and Title Selection +)	IN	27	EXT_GPIN4- (Control and Title Selection -)	IN
9	GPOUT1+ (External 3D L/R Output Reference +)	OUT	28	GPOUT1- (External 3D L/R Output Reference -)	OUT
10	GPOUT2+ (system reserved)	OUT	29	GPOUT2- (system reserved)	OUT
11	GPOUT3+ (system reserved)	OUT	30	GPOUT3- (system reserved)	OUT
12	GPOUT4+ (Internal 3D L/R Output Reference +)	OUT	31	GPOUT4- (Internal 3D L/R Output Reference -)	OUT
13	EXT_GPOUT1+ (Projector Ready/Busy +)	OUT	32	EXT_GPOUT1- (Projector Ready/Busy -)	OUT
14	EXT_GPOUT2+ (Projector Error Status +)	OUT	33	EXT_GPOUT2- (Projector Error Status -)	OUT
15	EXT_GPOUT3+ (IMB Play/End Status +)	OUT	34	EXT_GPOUT3- (IMB Play/End Status -)	OUT
16	EXT_GPOUT4+ (Projector Heartbeat +)	OUT	35	EXT_GPOUT4- (Projector Heartbeat -)	OUT
17	NC (not connected)	-	36	NC (not connected)	-
18	GND	PWR	37	GND	PWR
19	GND	PWR	-	-	-

EXT_GPIN1 - EXT_GPIN4: You can control the projector externally by combinations of input signals (high/low). (Projector power supply/lamp power supply/image mute/title selection)

EXT_GPOUT1 - EXT_GPOUT4: Functions in the above table are default settings. You can change the assigned functions.

Input Connector

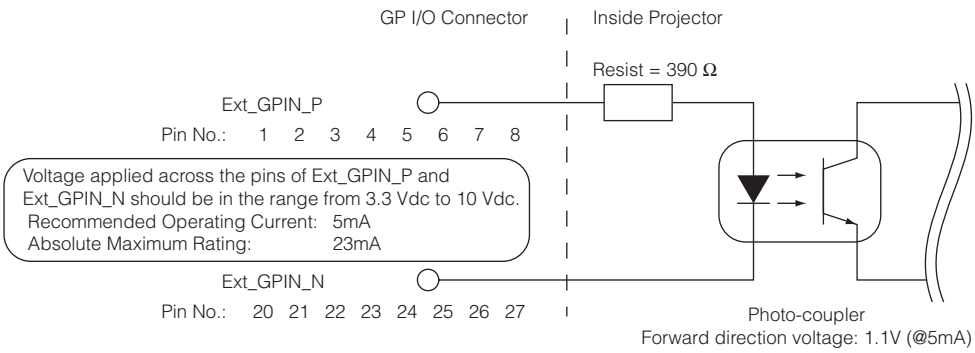

• Using GPIO Control

Momentary “ON” pulse enables you to control projector. To enable “ON” pulse, hold it for at least 500 ms. Hold “OFF” for at least 500 ms before “ON”. (See page 63)

Here is function list to control projector by using GPIO port.

Pin No.	Photo-coupler ON/OFF				Function
1-20	ON/OFF				3D L/R timing signal input ON/OFF
2-21	ON/OFF				3D L/R display timing signal input ON/OFF
3-22	-				System reserved (used internally)
4-23	-				System reserved (used internally)
5-24 6-25 7-26 8-27	8-27	7-26	6-25	5-24	The following functions apply depending on the combination of input terminals.
	OFF	OFF	OFF	ON	Power ON
	OFF	OFF	ON	OFF	Power OFF
	OFF	OFF	ON	ON	Lamp ON
	OFF	ON	OFF	OFF	Lamp OFF
	OFF	ON	OFF	ON	Image douser ON
	OFF	ON	ON	OFF	Image douser OFF
	OFF	ON	ON	ON	System reserved (used internally)
	ON	OFF	OFF	OFF	Selects the title registered to the preset button 1
	ON	OFF	OFF	ON	Selects the title registered to the preset button 2
	ON	OFF	ON	OFF	Selects the title registered to the preset button 3
	ON	OFF	ON	ON	Selects the title registered to the preset button 4
	ON	ON	OFF	OFF	Selects the title registered to the preset button 5
	ON	ON	OFF	ON	Selects the title registered to the preset button 6
	ON	ON	ON	OFF	Selects the title registered to the preset button 7
	ON	ON	ON	ON	Selects the title registered to the preset button 8

Example for dousing image: Input ON to 5-24 and 7-26 while 6-25 and 8-27 are OFF.
Example for selecting the preset button 2: Input ON to 5-24 and 8-27 while 6-25 and 7-26 are OFF.

NOTE
- The operation command coming from GPI/O port will be canceled when the projector is processing other tasks, such as lamp cooling and switching title.
- Set all other pins than those in use to “OFF”.
- The operation command is executed upon continuous input of the “ON” pulse for approximately 200 ms.

• Timing chart of GPIO control

Example of Select Preset Button

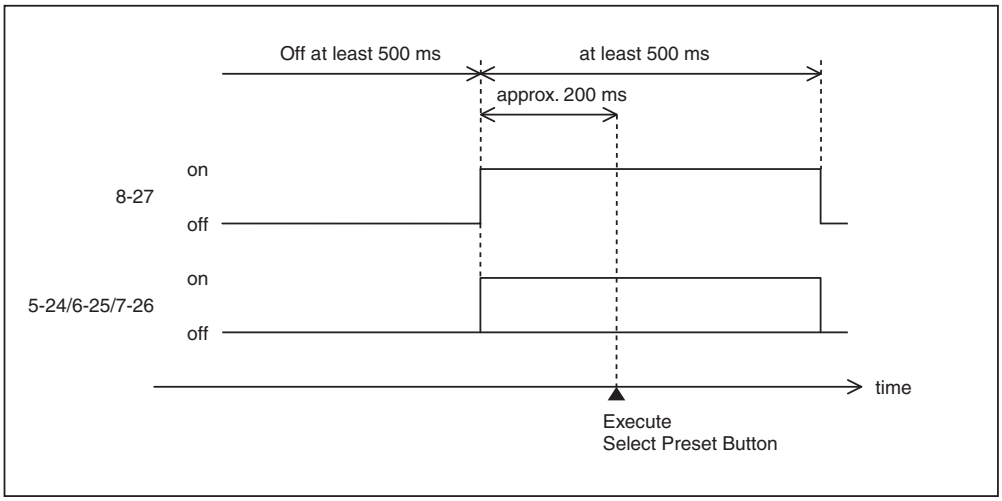

Example for turning the image douser (Douser) on

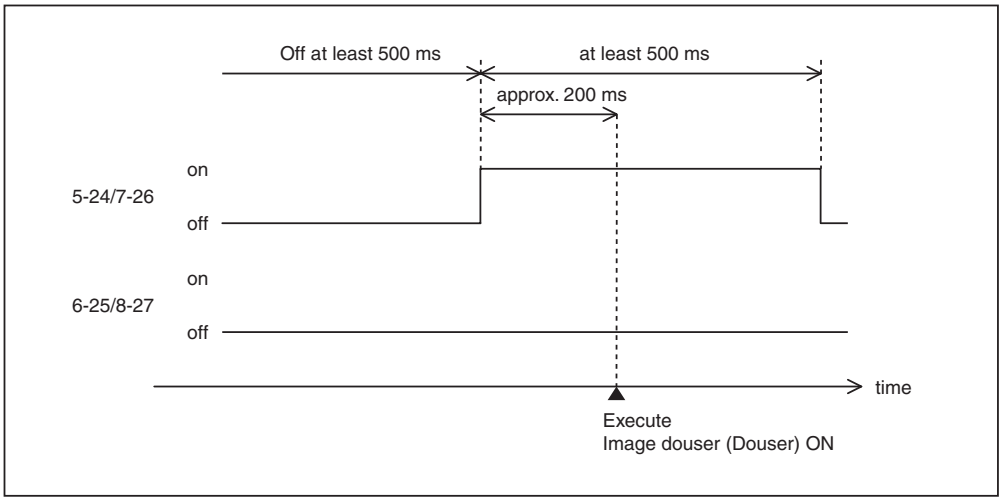

Example of Lamp On

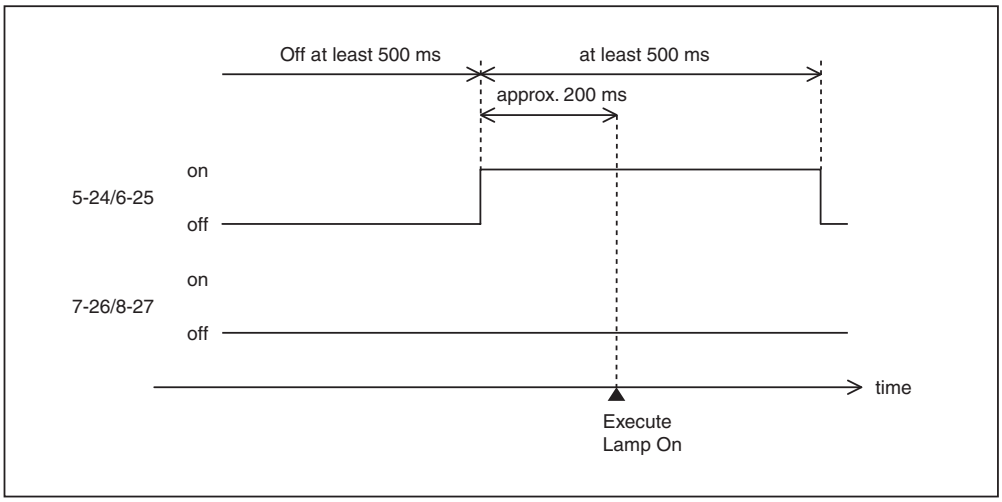

Example for turning the power off

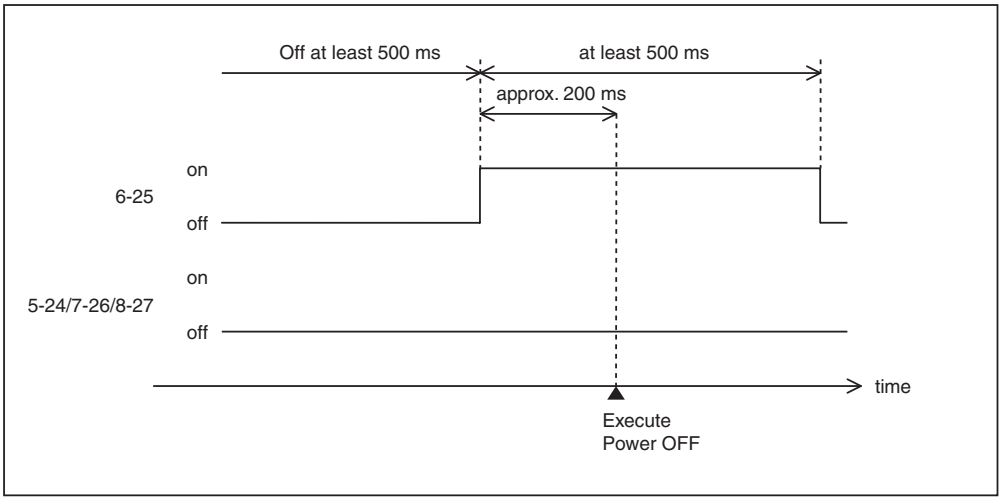

Output Connector

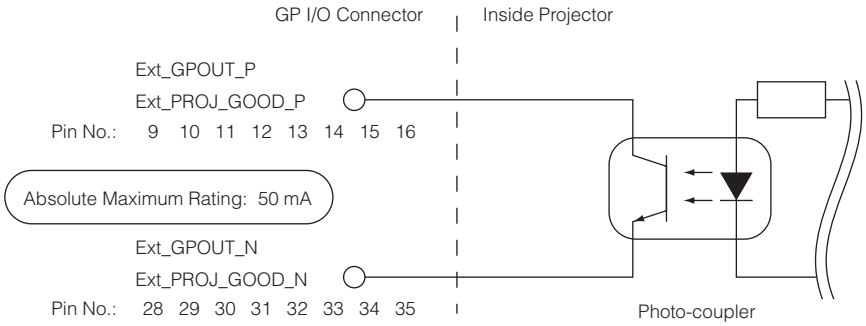

• Using GPIO Control

You can use GPIO control for the projector's health check and error check. Also, you can use the output as the trigger to control external devices.

The following functions are assigned to the pin number 13-32, 14-33, 15-34, and 16-35 (EXT_GPOUT1 - EXT_GPOUT4) as the default. You can change the assigned functions.

Pin No.	Photo-coupler ON/OFF	Function
9-28	ON/OFF	External 3D L/R timing signal output ON/OFF
10-29	–	System reserved (used internally)
11-30	–	System reserved (used internally)
12-31	ON/OFF	Internal 3D L/R timing signal output ON/OFF
13-32	ON/OFF	GPIO control status check ON: GPIO control (input) is unavailable. OFF: GPIO control (input) is available.
14-33	ON/OFF	Error check ON: Error OFF: No error
15-34	ON/OFF	Media block status check ON: The content is being played OFF: The content is stopped/paused
16-35	ON/OFF	Health check (heart beat) ON and OFF are alternately output when operations are normal.

6-6-3. 3D connector (D-sub 15 pin)

This is used to connect a 3D image system to the projector.

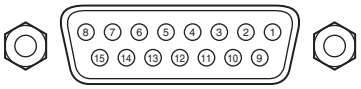

Pin view of a female connector

Pin No.	Signal Name	I/O	Function
1	+12V	PWR	Supplies power (+12V) to the 3D image system
2	GNDC	GND	Ground
3	GNDC	GND	Ground
4	RS232_RX	IN	Data transmission from the 3D image system (1200 Baud, 8 bits, No Parity)
5	RS232_TX	OUT	Data transmission to the 3D image system (1200 Baud, 8 bits, No Parity)
6	CONN_3D_MODE+	OUT	3D mode status (+) (Connects to the collector of the output transistor of the photo coupler inside the projector)
7	CONN_SYNC+	OUT	3D L/R switching timing signal (+) (Connects to the collector of the output transistor of the photo coupler inside the projector)
8	3D_INPUT_REFERENCE+	IN	3D L/R timing signal (+) (Connects to the anode of the input diode of the photo coupler inside the projector)
9	+12V	PWR	Supplies power (+12V) to the 3D image system
10	3D_INPUT_REFERENCE–	IN	3D L/R timing signal (–) (Connects to the cathode of the input diode of the photo coupler inside the projector)
11	3D_DISPLAY_REFERENCE+	IN	3D L/R display timing signal (+) (Connects to the anode of the input diode of the photo coupler inside the projector)
12	3D_DISPLAY_REFERENCE–	IN	3D L/R display timing signal (–) (Connects to the cathode of the input diode of the photo coupler inside the projector)
13	CONN_3D_MODE–	OUT	3D mode status (–) (Connects to the emitter of the output transistor of the photo coupler inside the projector)
14	CONN_SYNC–	OUT	3D L/R switching timing signal (–) (Connects to the emitter of the output transistor of the photo coupler inside the projector)
15	N/C	–	Unused

6-6-4. SDI-A, SDI-B, SDI-C, SDI-D (HD-SDI input connector) (BNC)

This is a signal input connector (SMPTE 292/HDSDI) for CINEMA.
The SMPTE 292/HD-SDI transfers HDTV signals with 1.5 GHz digital serial signals, so use a 75 Ω coaxial cable having a thickness and characteristics higher than 5C-FB, and use a BNC for the connector.

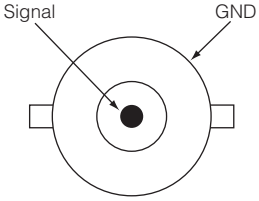

6-6-5. DVI-A, DVI-B (DVI digital Input connector) (DVI-D 24 pin)

This is a single link DVI input connector that is compliant with hot plug detect (HPD). Use a single link cable. Noise may be generated in the video if you use a dual link cable.
EDID is available even when the projector is switched off.

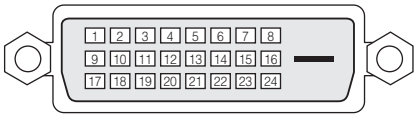

Pin view of female connector

Pin No.	Signal Name	Pin No.	Signal Name
1	TMDS Data 2-	13	unused
2	TMDS Data 2+	14	+5V Power
3	TMDS Data 2 Shield	15	Ground
4	Unused	16	Hot Plug Detect*
5	Unused	17	TMDS Data 0-
6	DDC Clock	18	TMDS Data 0+
7	DDC Data	19	TMDS Data 0 Shield
8	Unused	20	unused
9	TMDS Data 1-	21	unused
10	TMDS Data 1+	22	TMDS Clock Shield
11	TMDS Data 1 Shield	23	TMDS Clock+
12	Unused	24	TMDS Clock-

6-7. Related products list

Product name		Model name
Lens	Zoom lens 1.25 to 1.45	L2K-12ZM
	Zoom lens 1.45 to 1.8	L2K-14ZM
	Zoom lens 1.44 to 2.05	NC-50LS14Z
	Zoom lens 1.6 to 2.4	NC-50LS16Z
	Zoom lens 1.8 to 2.4	L2K-18ZM
	Zoom lens 1.8 to 3.0	NC-50LS18Z
	Zoom lens 2.2 to 3.0	L2K-22ZM
	Zoom lens 2.15 to 3.6	NC-50LS21Z
	Zoom lens 3.0 to 4.3	L2K-30ZM
	Wide Converter Lens X 1.26	NC-80LS13F
Anamorphic lens motorized turret	Anamorphic turret	NC-AT02
Lamp	4.5 kW Lamp	NC-LP4501
	6.0 kW Lamp	NC-LP6001
	7.0 kW Lamp	NC-55LP701
Dedicated base	Pedestal	NC-PD02
Replacement air filter	Air Filter (For the lamp)	NC-80AF01
	Air Filter (For the projector)	NC-80AF02
Built-in type multi-media switcher	Built-in type Multi-Media Switcher	MM3000B
Interface board (DVI HDCP)	DVI (HDCP) Input Board	MM-70DV01
Interface board (SDI)	SDI Input Board	MM-SDI
Interface board (RGB)	Analogue RGB Input Board	MM-RGB
Interface board (VIDEO)	Video Input Board	MM-VIDEO

(MEMO)

© NEC Display Solutions, Ltd. 2010
Ver.1 02/10