DLP Cinema® Projector

NEC

NC2500S

User's Manual

NEC Viewtechnology, Ltd.

Important Information

WARNING

TO PREVENT FIRE OR SHOCK HAZARDS, DO NOT EXPOSE THIS UNIT TO RAIN OR MOISTURE. ALSO DO NOT USE THIS UNIT'S POLARIZED PLUG WITH AN EXTENSION CORD RECEPTACLE OR OTHER OUTLETS, UNLESS THE PRONGS CAN BE FULLY INSERTED. REFRAIN FROM OPENING THE CABINET AS THERE ARE HIGH-VOLTAGE COMPONENTS INSIDE. REFER SERVICING TO QUALIFIED SERVICE PERSONNEL.

CAUTION

RISK OF ELECTRIC SHOCK
DO NOT OPEN

CAUTION

TO REDUCE THE RISK OF ELECTRIC SHOCK, DO NOT OPEN COVER. NO USER-SERVICEABLE PARTS INSIDE. REFER SERVICING TO QUALIFIED SERVICE PERSONNEL.

This symbol warns the user that uninsulated voltage within the unit may have sufficient magnitude to cause electric shock. Therefore, it is dangerous to make any kind of contact with any part inside of this unit.

This symbol alerts the user that important literature concerning the operation and maintenance of this unit has been included. Therefore, it should be read carefully in order to avoid any problems.

DOC compliance Notice

This Class A digital apparatus meets all requirements of the Canadian Interference-Causing Equipment Regulations.

Precautions: Please read this manual carefully before using your **NC2500S** and keep the manual handy for future reference.

WARNING

This is a Class A product. In a domestic environment this product may cause radio interference in which case the user may be required to take adequate measures.

CAUTION

- In order to reduce any interference with radio and television reception use a signal cable with ferrite core attached. Use of signal cables without a ferrite core attached may cause interference with radio and television reception.
- This equipment has been tested and found to comply with the limits for a Class A digital device, pursuant to Part 15 of the FCC Rules. These limits are designed to provide reasonable protection against harmful interference when the equipment is operated in a commercial environment. This equipment generates, uses, and can radiate radio frequency energy and, if not installed and used in accordance with the installation manual, may cause harmful interference to radio communications.
  Operation of this equipment in a residential area is likely to cause harmful interference in which case the user will be required to correct the interference at his own expense.

Important Safeguards

These safety instructions are to ensure the long life of your projector and to prevent fire and shock. Please read them carefully and heed all warnings.

Installation

1. Place the projector on a flat, level surface in a dry area away from dust and moisture. Tilting the front of the projector up or down from level could reduce lamp life.
   Do not put the projector on its side when the lamp is on. Doing so may cause damage to the projector.
2. Do not place the projector in direct sunlight, near heaters or heat radiating appliances.
3. Exposure to direct sunlight, smoke or steam could harm internal components.
4. Handle your projector carefully. Dropping or jarring your projector could damage internal components.
5. To carry the projector, a minimum of five persons are required.
   Do not hold the lens part and the anamorphic lens part with your hand. Otherwise the projector may tumble or drop, causing personal injury.
6. Do not place heavy objects on top of the projector.

Power Supply

1. The projector is so designed that it operates with the power supply voltage described below.
   - Projection Head : 0.95 kW 5A AC200-240V 50/60Hz Single-phase
   - Lamp Power Supply Unit :
     8.0kW 28A AC200-230V 50/60Hz Three-phase (Star connection),
     8.0kW 16A AC380-415V 50/60Hz Three-phase (Star connection)

   Ensure that your power supply fits this requirement before attempting to use your projector.
2. Consult your dealer for installing the power cord to the projector. DO NOT install the power cord by yourself. Doing so may cause a fire or electric shock.
3. Handle the power cord carefully and avoid excessive bending. Do not place any heavy objects on the power cord. A damaged cord can cause electric shock or fire.
4. If the projector will not be used for an extended period of time, shut down AC power.
5. Placing the power cord and the signal cable closely to each other can cause beat noise. If this happens, keep the two separated so that beat noise is not generated. Beat noise is corruption of the picture often seen as a rolling band moving through the image.
6. Do not touch the projector during a thunder storm. Doing so can cause electrical shock or fire.

Cleaning

1. Shut down AC power to the projection head and the lamp power supply unit before cleaning.
2. Clean the cabinet periodically with a damp cloth. If heavily soiled, use a mild detergent. Never use strong detergents or solvents such as alcohol or thinner.
3. Use a blower or lens paper to clean the lens, and be careful not to scratch or mar the lens.

Fire and Shock Precautions

1. Ensure that there is sufficient ventilation and that vents are unobstructed to prevent potentially dangerous concentrations of ozone and the build-up of heat inside your projector. Allow at least 8 inches (20cm) of space between your projector and a wall. Allow at least 20 inches (50 cm) of space between the ventilation outlet of the lamp power supply unit and an object.
   Connect the projector exhaust outlet with the exhaust equipment having a capacity of 16m^3/min or more.
2. Prevent foreign objects such as paper clips and bits of paper from falling into your projector. Do not attempt to retrieve any objects that might fall into your projector. Do not insert any metal objects such as a wire or screwdriver into your projector. If something should fall into your projector, disconnect it immediately and have the object removed by a qualified service person.
3. Do not place any liquids on top of your projector. Refer servicing to qualified service personnel if liquid has been spilled.
4. Keep any items such as magnifying glass out of the light path of the projector. The light being projected from the lens is extensive, therefore any kind of abnormal objects that can redirect light coming out of the lens, can cause unpredictable outcome such as fire or injury to the eyes.
5. Do not cover the lens with the supplied lens cap or equivalent while the projector is on. Doing so can lead to melting of the cap and possibly burning your hands due to the heat emitted from the light output.
6. When using a LAN cable:
   For safety, do not connect to the connector for peripheral device wiring that might have excessive Voltage.

CAUTION: High Pressure Lamp May Explode if Improperly Handled. Refer Servicing to Qualified Service Personnel.

Lamp Caution: Please read before operation

Due to the lamp being sealed in a pressurized environment, there is a small risk of explosion, if not operated correctly. There is minimal risk involved, if the unit is in proper working order, but if damaged or operated beyond the recommended hours, the risk of explosion increases. Please note that there is a warning system built in, that displays following message when you reach a preset operating time “Bulb Over Time”. When you see this message please contact your dealer for a replacement. If the lamp does explode, smoke will be discharged from the vents located on the back of the unit. Do not stand in front of the vents during the operation. This smoke is comprised of glass in particulate form and Xenon gas, and will not cause harm if kept out of your eyes. If your eyes have been exposed to this gas, please flush your eyes out with water immediately and seek immediate medical attention. Do not rub your eyes! This could cause serious injury.

WARNING:

1. Do not look into the lens while the projector is on. Serious damage to your eyes could result.
2. When main body is damaged, cooling fluids may come out of internal part. DO NOT touch and drink the cooling fluid.
   When the cooling fluids are swallowed or contacted with your eyes, please consult with doctors immediately.

CAUTION

Never unplug the projection head power plug from the outlet or disconnect the breaker connected to the AC power cord of the lamp power supply unit under the following conditions. Doing so can damage the projector.

- While projecting images
- While cooling after the projector has been turned off. (The POWER indicator blinks in orange while the fan is rotating, and the LCD screen is displaying “cooling...”. The cooling fan continues to work for 5 minutes.)

Remote Control Precautions

- Handle the remote control carefully.
- If the remote control gets wet, wipe it dry immediately.
- Avoid excessive heat and humidity.
- Do not heat, take apart, or throw batteries into fire.
- If you will not be using the remote control for a long time, remove the batteries.
- Ensure that you have the batteries’ polarity (+/-) aligned correctly.
- Do not use new and old batteries together, or use different types of batteries together.
- Dispose of used batteries according to your local regulations.

Disposing of your used product

EU-wide legislation as implemented in each Member State requires that used electrical and electronic products carrying the mark (left) must be disposed of separately from normal household waste.
This includes projectors and their electrical accessories or lamps. When you dispose of such products, please follow the guidance of your local authority and/or ask the shop where you purchased the product.
After collecting the used products, they are reused and recycled in a proper way. This effort will help us reduce the wastes as well as the negative impact to the human health and the environment at the minimum level.
The mark on the electrical and electronic products only applies to the current European Union Member States.

For questions relating to unclear points or repairs

Contact your dealer or the following support branches for questions relating to unclear points, malfunctions and repairs of the product.

In Europe

NEC Europe, Ltd. / European Technical Centre
Address: Unit G, Stafford Park 12, Telford TF3 3BJ, U.K.
Telephone: +44 1952 237000
Fax Line: +44 1952 237006

In North America

NEC Corporation of America
Digital Cinema Division
Address: 4111 West Alameda Avenue Suite 412 Burbank, CA 91505
Telephone: 818 557 2500
*If the above line is busy, please dial as below;
Telephone: 866 632 6431

Précaution: lire attentivement ce manuel avant d'utiliser le **NC2500S** et le conserver à portée de main pour future référence.

AVERTISSEMENT

POUR EVITER UN INCENDIE OU UN RISQUE D'ELECTROCUTION NE PAS EXPOSER CET ENSEMBLE A LA PLUIE OU A L'HUMIDITE; DE MEME, NE PAS BRANCHER LA PRISE POLAIRE AVEC UNE RALLONGE A MOINS QUE LES BROCHES DE LA PREMIERE NE S'Y INSERENT PLEINEMENT.
EVITER D'OUVRIR LE COFFRET CAR IL Y A, A L'INTERIEUR DES COMPOSANTS SOUMIS A UNE HAUTE-TENSION; POUR LES REPARATIONS, S'ADRESSER A UN PERSONNEL QUALIFIE.

ATTENTION

RISQUE D'ELECTROCUTION
NE PAS OUVRIR

ATTENTION

POUR EVITER LES RISQUES D'ELECTROCUTION, NE PAS OUVRIR LE COUVERCLE. AUCUN DES ELEMENTS INTERNES NE DOIT ETRE REPARE PAR L'UTILISATEUR. NE CONFIER L'ENTRETIEN QU'A UN PERSONNEL QUALIFIE.

L'éclair fléché dans un triangle équilatéral est destiné à avertir l'utilisateur de la présence, dans l'appareil, d'une zone non-isolée soumise à une haute-tension dont l'intensité èst suffisante pour constituer un risque d'électrocution.

Le point d'exclamation dans un triangle équilatéral est destiné à attirer l'attention de l'utilisateur sur la présence d'informations de fonctionnement et d'entretien importantes dans la brochure accompagnant l'appareil.

DOC avis de conformité

Cet appareil numérique de la classe A respecte toutes les exigences du Réglement sur le Matériel D'interférence du Canada.

Recommandations importantes

Ces instructions de sécurité ont pour but d'assurer une longue vie à votre projecteur et d'éviter un incendie ou une décharge électrique. Prière de les lire attentivement et de tenir compte de tous les avertissements.

Installation

1. Placer le projecteur sur une surface plane et de niveau, et dans un endroit sec et à l'abri des poussières et de l'humidité.
2. Ne pas exposer le projecteur aux rayons directs du soleil, ni le placer près d'un chauffage ou de dispositifs de radiation de chaleur.
3. L'exposition aux rayons directs du soleil, à la fumée ou à la vapeur pourrait endommager des composants internes.
4. Manipuler le projecteur avec précaution. La chute du le projecteur ou lui donner des chocs pourrait endommager des composants internes.
5. Le transport du projecteur doit être effectué par cinq personnes au minimum.
   Ne pas saisir le projecteur par son objectif ni par les des anamorphoseurs. Le cas échéant, le projecteur risque de se renverser ou de tomber et d'être à l'origine d'un accident corporel.
6. Ne pas poser d'objets lourds sur le dessus du projecteur.

Alimentation

1. Le projecteur est conçu pour fonctionner sous la tension d'alimentation ci-dessous.
   - Tête de projection : 0.95 kW 5A CA 200-240V 50/60 Hz Monophasé
   - Unité d'alimentation de la lampe : 8.0kW 28A CA200-230V 50/60Hz Triphasé (Branchement étoile), 8.0kW 16A CA380-415V 50/60Hz Triphasé (Branchement étoile)

   S'assurer que la tension du secteur soit conforme à ces caractéristiques avant d'utiliser le projecteur.
2. Pour l'installation du cordon d'alimentation électrique sur le projecteur, voir le concessionnaire. NE PAS intaller le cordon d'alimentation électrique soi-même. Il y a risque d'incendie ou d'électrocution.
3. Manipuler le cordon d'alimentation avec précaution et éviter des flexions excessives. Ne placez pas d'objets lourds sur le cordon d'alimentation. Un cordon endommagé peut occasionner une décharge électrique ou un incendie.
4. Si le projecteur n'est pas utilisé pendant une longue période, coupez l'alimentation CA.
5. Placer le cordon d'alimentation et le câble de signal tout prés l'un de l'autre peut occasionner un bruit de battement. Si cela se produit, les maintenir séparés jusqu'à ce que le bruit de battement disparaisse.
6. Ne pas toucher le projecteur pendant un orage. Cela pourrait causer un choc électrique ou un incendie.

Nettoyage

1. Couper l'alimentation CA de la tête de projection et de l'unité d'alimentation de la lampe avant de nettoyer.
2. Nettoyer régulièrement le boîtier extérieur avec un chiffon humide. S'il est trés sale, utiliser un détergent doux. Ne jamais utiliser de détergent forts ou de solvants tels que de l'alcool ou du diluant.
3. Utiliser un souffleur ou du papier pour objectif pour nettoyer l'objectif, et veiller à ne pas rayer ou endommager l'objectif.

Précautions contre l'incendie ou la décharge

1. S'assurer qu'il y ait une ventilation suffisante et que les ouvertures ne soient pas obstruées afin d'éviter des concentrations potentiellement dangereuses d'ozone et l'accumulation de chaleur à l'intérieur du projecteur. Laisser au moins 20 cm d'espace entre le projecteur et un mur. Laisser au moins 50 cm (20 pouces) d'espace entre l'orifice de ventilation de l'unité d'alimentation de la lampe et tout objet. Connecter la sortie d'air du projecteur à l'équipement d'échappement ayant une capacité de 16m^3/min ou plus.

2. Empêcher tous cocps étrangers tels que des attaches trombones ou des morceaux de papier de tomber à l'intérieur du projecteur. Ne pas essayer de récuperer des objets qui seraient tombés dans le projecteur. Ne pas introduire d'objets métalliques tels que fil ou un tournevis dans le projecteur. En cas de chute d'objet dans le projecteur, le débrancher immédiatement et faire enlever l'objet par un technicien agréé.
3. Ne pas poser de liquides sur le dessus du projecteur. Confier la réparation à du personnel technique qualifié si du liquide a été renversé.
4. Maintenez tout ce qui s'apparente à une loupe en dehors du faisceau lumineux du projecteur. La lumière projetée par l'objectif est très puissante, de sorte que tout objet en opposition pourrait dévier le faisceau provenant de l'objectif, ce qui pourrait avoir des conséquences imprévues telles qu'un incendie ou une lésion occulaire.
5. Ne bouchez pas l'objectif avec son couvercle fourni lorsque le projecteur est allumé. Faire cela pourrait faire fondre le couvercle et peut-être brûler vos mains à cause de la châleur émise par le faisceau lumineux.

ATTENTION: La lampe à haute pression peut exploser si elle est manipulée incorrectement. Confier l'entretien à du personnel d'entretien qualifié.

Précautions avec la lampe : lire avant l'utilisation

La lampe a été scellée dans un environnement sous pression, et il y a donc un petit risque d'explosion, si elle n'est pas utilisée correctement. Le risque est minime si l'appareil est en bon ordre de marche, mais s'il est endommagé ou utilisé au-delà du nombre d'heures recommandées, le risque d'explosion augmente alors. Il est à noter l'existence d'un systéme d'avertissement intégré, lequel affiche le message "Bulb Over Time" lorsqu'un temps de fonctionnement préréglé est atteint. Si la lampe explose, de la fumée peut étre produite par les fentes d'aération situées sur l'arrière de l'appareil. Ne vous tenez pas devant les évents pendant l'opération. Cette fumée est composée de verre sous forme de particules et de gaz de Xenon, et n'est pas nuisible si elle est maintenue à distance des yeux. Si les yeux sont exposés a ce gaz, les rincer immédiatement à l'eau courante et con sulter tout de suite un médecin. Ne pas se frotter les yeux ! Cela pourrait provoquer une grave blessure.

AVERTISSEMENT:

1. Ne pas regarder dans l'objectif lorsque le projecteur est allumé. De sérieux dommages aux yeux pourraient en résulter.
2. Lorsque le corps principal est endommagé, du liquide de refroidissement peut s'échapper des parties internes. NE PAS toucher ou avaler le liquide de refroidissement.
   Si le liquide de refroidissement est avalé ou qu'il rentre en contact avec vos yeux, veuillez consulter un médecin immédiatement.

ATTENTION

Ne jamais débrancher la prise d'alimentation à tête de projection ni débrancher le disjoncteur connecté au cordon d'alimentation de l'unité d'alimentation dans les conditions suivantes. Cela pourrait endommager le projecteur.

- Lors de la projection d'images
- Pendant le refroidissement après que le projecteur ait été éteinte. (Le voyant POWER clignote en orange lorsque le ventilateur fonctionne, et l'écran ACL affiche « cooling... ». le ventilateur du refroidissement continuent à tourner pendant 5 minutes.)

Précautions se rapportant á la télécommande

- Manipuler la télécommande avec précaution.
- Si la télécommande est mouillée, l'essuyer immédiatement.
- Evitar toute chaleur chaleur excessive et l'humidité.
- Ne pas chauffer, démonter ou jeter les piles au feu.
- Si la télécommande n'est pas utilisée pendant une longue période, retirer les piles.
- S'assurer de respecter la polarité (+/–) des piles.
- Ne pas utiliser des piles neuves et des piles usagées en méme temps et ne pas utiliser des piles de différents types ensemble.
- Mettre les piles usagées au redut d'parés la réglementation locales.

Mise au rebut du produit usagé

La législation européenne, appliquée dans tous les Etats membres, exige que les produits électriques et électroniques portant la marque (à gauche) doivent être mis au rebut séparément des autres ordures ménagères. Ceci inclus les projecteurs et leurs accessoires électriques ou lampes. Lorsque vous mettez au rebut ces produits, veuillez suivre les recommandations des autorités locales et/ou demandez conseil au magasin qui vous a vendu le produit.
Une fois ces produits mis au rebut, ils sont recyclés et de manière appropriée. Cet effort nous aidera à réduire les déchets et à maintenir au niveau minimum leurs conséquences négatives sur la santé humaine et sur l'environnement.
La marque figurant sur les produits électriques et électroniques ne s'applique qu'aux Etats membres actuels de l'Union Européenne.

Si vous avez des questions concernant des points peu clairs ou des réparations

Contacter votre distributeur ou les branches d'assistance suivantes si vous avez des questions concernant des points à éclaircir, des défauts et des réparations du produit.

En Europe

NEC Europe, Ltd. / European Technical Centre
Adresse : Unit G, Stafford Park 12, Telford TF3 3BJ, U.K.
Téléphone : +44 1952 237000
Fax : +44 1952 237006

En Amérique du Nord

NEC Corporation of America
Division Cinéma Numérique
Adresse : 4111 West Alameda Avenue Suite 412 Burbank, CA 91505
Téléphone : 818 557 2500
*Si la ligne ci-dessus est occupée, essayer le numéro suivant ;
Téléphone : 866 632 6431

Maschinenlärminformations-Verordnung – 3. GPSGV,

Der höchste Schalldruckpegel beträgt 70 dB(A) oder weniger gemäß EN ISO 7779.

WARNUNG

ZUR VERMEIDUNG VON FEUER UND ELEKTRISCHEN SCHLÄGEN DARF DAS GERÄT WEDER REGEN NOCH FEUCHTIGKEIT AUSGESETZT WERDEN. DER POLARISIERTE STECKER DIESES GERÄTES DARF NUR DANN IN EIN VERLÄNGERUNGSKABEL ODER IN EINE STECKDOSE EINGESTECKT WERDEN, WENN DIE STECKKONTAKTE VOLLSTÄNDIG EINGESTECKT WERDEN KONNEN. UNTERLASSEN SIE, DAS GERÄT ZU OFFNEN, DA DADURCH IM GERÄT FREILIEGENDE HOCHSPANNUNGSFÜHRENDE TEILE BERÜHRT WERDEN KÖNNEN. LASSEN SIE DEN KUNDENDIENST NUR VON HIERFÜR QUALIFIZIERTEN PERSONEN DURCHFÜHREN.

ACHTUNG

GEFAHR DURCH ELEKTRISCHEN SCHLAG
NICHT ÖFFNEN

ACHTUNG

ZUR VERMEIDUNG EINES ELEKTRISCHEN SCHLAGES ÖFFNEN SIE NICHT DAS GEHÄUSE. INNERHALB DES GEHÄUSES BEFINDEN SICH KEINE FÜR DIE BEDIENUNG DES GERÄTES ERFORDERLICHEN TEILE. LASSEN SIE DEN KUNDENDIENST NUR VON HIERFÜR QUALIFIZIERTEN PERSONEN DURCHFÜHREN.

DIESES SYMBOL WARNT DEN BEDIENER, DASS INNERHALB DES GERÄTES UNISOLIERTE TEILE VORHANDEN SIND, DIE HOCHSPANNUNG FÜHREN UND DEREN BERÜHRUNG EINEN ELEKTRISCHEN SCHLAG VERURSACHEN KANN.

DIESES SYMBOL MACHT DEN BËDIENER DARAUF AUFMERKSAM, DASS WICHTIGE, DEN BETRIEB UND
DIE WARTUNG DES GERÄTES BETREFFENDE SCHRIFTEN BEIGEFÜGT SIND. UM IRGENDWELCHE PROBLEME ZU VERMEIDEN, SOLLTEN DIESE BESCHREIBUNGEN SORGFÄLTIG GELESEN WERDEN.

Vorsichtsmaßnahmen: Lesen Sie sich dieses Handbuch bitte sorgfaltig durch, bevor Sie den **NC2500S** benutzen, und bewahren Sie das Bedienungshandbuch in greifbarer Nahe als spatere Referenz auf.

Wichtige Sicherheitshinweise

Diese Sicherheitshinweise sollen eine lange Lebensdauer Ihres Projektors sicherstellen und vor Feuer und elektrischen Schlägen schützen. Lesen Sie diese Hinweise sorgfältig durch und beachten Sie alle Warnungen.

Installation

1. Stellen Sie den Projektor auf eine flache, waagerechte Fläche in einer trockenen Umgebung; frei von Staub und Feuchtigkeit.
2. Stellen Sie den Projektor weder in direktes Sonnenlicht noch in die Nähe einer Heizung oder sonstiger Hitze abstrahlender Einrichtungen.
3. Wenn das Gerät direktem Sonnenlicht, Rauch oder Dampf ausgesetzt wird, können interne Komponenten beschadigt werden.
4. Behandeln Sie Ihren Projektor vorsichtig. Fallenlassen oder starkes Schutteln kann interne Komponenten beschädigen.
5. Zum Tragen des Projektors werden mindestens fünf Personen benötigt.
   Den Projektor nicht am Linsenbereich ode den anamorphotischen Linsenwelle tragen.
   Anderenfalls kann der Projektor umkippen oder herunterfallen und Verletzungen verursachen.
6. Legen Sie keine schweren Gegenstände auf den Projektor.

Spannungsversorgung

1. Der Projektor wurde so konzipiert, dass er mit der unten aufgeführten Netzspannung läuft.

- Projektionskopf: 0.95kW 5A 200-240V Wechselstrom 50/60Hz einphasig
- Stromversorgungsgerät der Lampe:
  8.0kW 28A 200-230V Wechselstrom 50/60Hz dreiphasig (Star-Anschluss),
  8.0kW 16A 380-415V Wechselstrom 50/60Hz dreiphasig (Star-Anschluss)

Stellen Sie sicher, dass die vorhandene Spannungsversorgung diesen Vorgaben entspricht, bevor Sie versuchen, Ihren Projektor zu betreiben.

2. Zum Installieren des Netzkabels am Projektor wenden Sie sich bitte an Ihren Fachhändler. UNTER KEINEN UMSTÄNDEN versuchen, das Netzkabel selbst zu installieren. Brand- und Schlaggefahr.
3. Behandeln Sie das Netzkabel vorsichtig und vermeiden Sie Knicke. Legen Sie keine schweren Gegenständde das Netzkabel. Ein beschädigtes Netzkabel kann elektrische Schläge oder einen Brand verursachen.
4. Wenn der Projektor über eine längere Zeit nicht genutzt wird, schalten Sie die Stromversorgung ab.
5. Wenn Sie das Netzkabel und das Signalkabel in unmittelbarer Nähe zueinander platzieren, kann Überlagerungsrauschen auftreten. Vergrößern Sie in einem derartigen Fall den Abstand zwischen diesen beiden Kabeln.
6. Berühren Sie den Projektor auf keinen Fall während eines Gewitters. Wenn Sie dies nicht beachten, kann dies zu einem elektrischen Schlag oder einem Feuer führen.

Reinigung

1. Schalten Sie die Stromversorgung zum Projektionskopf und zum Stromversorgungsgerät der Lampe vor der Reinigung ab.
2. Reinigen Sie das Gehäuse regelmäßig mit einem feuchten Tuch. Bei starker Verschmutzung verwenden Sie ein mildes Reinigungsmittel. Reinigen Sie das Gerät niemals mit starken Reinigungsoder Lösungs-mitteln wiez.B. Alkohol oder Verdünner.
3. Reinigen Sie die Linse mit einer Blaseinrichtung oder einem Linsentuch. Beachten Sie dabei, dass die Linsenoberfläche weder zerkratzt noch auf andere Weise beschädigt wird.

Vorsichtsmasnahmen zur Vermeidung von Bränden und elektrischen Schlägen

1. Sorgen Sie für ausreichende Belüuftung und stellen Sie außerdem sicher, dass die Lüftungsschlitze frei bleiben, damit sich innerhalb des Projektors kein Hitzestau bilden kann. Lassen Sie mindestens 20 cm Abstand zwischen Ihrem Projektor und der Wand. Lassen Sie mindestens 50 cm Abstand zwischen der Belüftung des Stromversorgungsgeräts der Lampe und anderen Gegenständen.
   Schließen Sie den Entlüftungsanschluss des Projektors an die Entlüftungsanlage an, die eine Kapazität von 16m^3/min oder mehr hat.
2. Vermeiden Sie, dass Fremdgegenstande wie Büroklammern und Papierschnipsel in den Projektor fallen. Versuchen Sie nicht, in den Projektor gefallene Gegenstände selbst zu entfernen. Stecken Sie keine Metallgegenstände wie einen Draht oder Schraubendreher in Ihren Projektor. Wenn etwas in den Projektor gefallen ist, müssen Sie sofort den Netzstecker ziehen und den Gegenstand von qualifiziertem Servicepersonal entfernen lassen.
3. Stellen Sie keine mit Flüssigkeit gefüllten Gefäße auf Ihren Projektor. Überlassen Sie die Reparatur ausschließlich qualifiziertem Servicepersonal, wenn Flüssigkeit verschüttet worden ist.
4. Lichtkegel des Projektors fern. Da das von der Linse projizierte Licht umfassend ist, können alle abnormalen Gegenstände, die in der Lage sind, das aus der Linse austretende Licht umzulenken, unvorhersehbare Ereignisse wie z.B. einen Brand oder Augenverletzungen verursachen.
5. Bedecken Sie die Linse nicht mit der mitgelieferten Linsenkape o.ä. wärend der Projektor eingeschaltet ist. Dies kann ein Schmelzen der Kappe verursachen. Darüber hinaus würden Sie sich aufgrund der vom Lichtausgang abgestrahlten Hitze wahrscheinlich die Hände verbrennen.

VORSICHT**:** Bei unsachgemäßer Handhabung kann die Hochdrucklampe explodieren. Überlassen Sie die Reparatur ausschließlich qualifiziertem Servicepersonal.

Vorsichtsmaßnahmen bezüglich der Lampe: Bitte vor dem Betrieb durchlesen

Aufgrund der unter Druck luftdicht verschlossenen Lampe besteht bei falscher Handhabung eine geringe Explosionsgefahr. Wenn sich das Gerät in einwandfreiem Zustand befindet, ist dieses Risiko minimal; die Explosionsgefahr erhöht sich jedoch im Falle einer Beschädigung oder bei einer Benutzung über die empfohlenen Betriebsstunden hinaus. Beachten Sie bitte, dass im Gerät ein Warnsystem integriert ist, das bei Erreichen der voreingestellten Betriebsdauer die nachfolgende Meldung anzeigt: “Bulb Over Time”.
Im Falle einer Lampenexplosion tritt aus den Lüftungsschlitzen der Rückseite des Gerätes Rauch aus. Stehen Sie nicht vor den Entlüftungsöffnungen während des Betriebes. Dieser Rauch besteht aus einer ganz besonderen Form von Glas und aus Xenon-Gas. Solange dieser Rauch nicht in die Augen gelangt, bestehen keinerlei gesundheitliche Risiken.
Wenn Ihre Augen dem Gas ausgesetzt worden sind, spülen Sie die Augen bitte sofort mit Wasser aus und konsultieren Sie einen Arzt. Reiben Sie die Augen nicht!
Dies könnte ernsthafte Verletzungen zur Folge haben.

WARNUNG:

1. Schauen Sie nicht in die Linse, wenn der Projektor eingeschaltet ist. Dies könnte schwere Augenverletzungen zur Folge haben.
2. Wenn das Hauptteil beschädigt ist, kann Kühlungsflüssigkeit aus dem Inneren austreten. Berühren Sie die Flüssigkeit NICHT, und trinken Sie sie NICHT.
   Wenn die Kühlungsflüssigkeit geschluckt wurde oder in Augenkontakt kam, rufen Sie bitte sofort einen Arzt.

VORSICHT

Ziehen Sie den Projektor-Hauptnetzstecker nicht vom Ausgang ab, und trennen Sie den Unterbrecher, der am Netzkabel der Lampenstromversorgungseinheit angeschlossen ist, unter den folgenden Bedingungen nicht ab. Anderenfalls kann der Projektor beschädigt werden.

- Während der Projizierung von Bildern
- Während des Abkühlens, nach dem Projektor ausgeschaltet worden ist. (Die POWER-Anzeige blinkt orange, während das Gebläse in Betrieb ist, und auf der LCD-Anzeige wird “cooling...” angezeigt. Das abkühlende fan fährt fort, für 5 Minuten zu arbeiten.)

Vorsichtsmaßnahmen zur Fernbedienung

- Behandeln Sie die Fernbedienung mit Sorgfalt.
- Wischen Sie die Fernbedienung sofort trocken, wenn sie einmal nass geworden sein sollte.
- Vermeiden Sie übermäßige Hitze und Feuchtigkeit.
- Erhitzen Sie die Batterien nicht, nehmen Sie sie nicht auseinander und werfen Sie sie nicht ins Feuer.
- Nehmen Sie die Batterien heraus, wenn Sie beabsichtigen, die Fernbedienung über einen längeren Zeitraum hinweg nicht zu benutzen.
- Stellen Sie sicher, dass die Batteriepole (+/-) richtig ausgerichtet sind.
- Verwenden Sie niemals verschiedene Batterietypen oder neue und alte Batterien zusammen.
- Entsorgen Sie leere Batterien entsprechen den an Ihrem Wohnortgeltenden Bestimmungen

Entsorgung Ihres benutzten Gerätes

Die EU-weite Gesetzgebung, wie sie in jedem einzelnen Mitgliedstaat gilt, bestimmt, dass benutzte elektrische und elektronische Geräte mit dieser Markierung (links) getrennt vom normalen Haushaltsabfall entsorgt werden müssen.
Dies schließt Projektoren und deren elektrisches Zubehör oder ihre Lampen mit ein. Folgen Sie beim Entsorgen eines solchen Gerätes bitte den Anweisungen Ihrer örtliche Behörde und/oder konsultieren Sie den Händler, bei dem Sie das Gerät erworben haben.
Nach der Sammlung benutzter Geräte werden diese erneut verwendet und entsprechend den Umweltbestimmungen recycelt. Das trägt dazu bei, die Abfallmenge zu reduzieren sowie die negativen Auswirkungen auf die menschliche Gesundheit und die Umwelt möglichst gering zu halten.
Die Markierung auf elektrischen und elektronischen Geräten gilt nur für die gegenwärtigen Mitgliedsstaaten der Europäischen Union.

Bei Fragen, die sich aus unklaren Punkten oder Reparaturarbeiten ergeben

Bei Fragen, die sich aus unklaren Punkten, Fehlfunktionen oder Reparaturarbeiten am Produkt ergeben, wenden Sie sich an Ihren Händler oder an eine der folgenden Niederlassungen.

In Europa

NEC Europe, Ltd. / European Technical Centre
Addresse: Unit G, Stafford Park 12, Telford TF3 3BJ, U.K.
Telefon: +44 1952 237000
Fax-Nummer: +44 1952 237006

In Nordamerika

NEC Corporation of America
Digital-Cinema-Abteilung
Adresse: 4111 West Alameda Avenue Suite 412 Burbank, CA 91505
Telefon: 818 557 2500
*Falls die oben aufgeführte Leitung besetzt sein sollte, wählen Sie bitte die folgende Nummer;
Telefon: 866 632 6431

Table of Contents

Table of Contents 1

1.What's in the Box? and the Names of the Projector Parts 2

1-1. Features 2
1-2. What's in the Box? 4
1-3. Names of the Projector Parts 6
1-4. Names on the Remote Control 12

2.Installation and Connection 15

2-1. Steps for setting up and connecting 15
2-2. Connecting the image input terminals 16
2-3. Connecting the various control terminal 17

3.Projection of Images (Basic Operation) 18

3-1. Steps of projecting images 18
3-2. Turning your projector on 19
3-3. Selecting the title of input signal 21
3-4. Adjusting the position and the size of projected screen 22
3-5. Turning your projector off 24

4.Using Menus 25

4-1. Basic operation with adjustment menus 25
4-2. Table of adjustment menus 29
4-3. Title Select 30
4-4. Configuration 31
4-5. Title Setup 31
4-6. Information 32

5.Maintenance of Your Projector 36

5-1. Cleaning the Cabinet 36
5-2. Cleaning the Lens 36

6.Appendix 37

6-1. Troubleshooting 37
6-2. Indicator display list 38
6-3. Error code list 40
6-4. Operation using an HTTP browser 42
6-5. Outline Drawing 44
6-6. Specifications 46
6-7. Pin Assignment and Functions of Terminal 49
6-8. Related products list 54

1. What's in the Box? and the Names of the Projector Parts

1-1. Features

- DLP Cinema® dedicated projector that supports large screen needs

NEC has applied its mounting technology and leading imaging technology to newly develop lamp and optical systems as well as a cooling system to support large screen needs.

- Equipped with easy to use functions

(1) Lens memory function that can be operated with one touch, and lamp power memory function
The DLP Cinema® projector is provided with a lens memory function for storing lens zoom positions and shift positions to set screens sizes for each input signal. It is also provided with a lamp power memory function for storing the brightness of the images on the screen for each input signal.
Even if you are projecting multiple images that have different settings for image sizes and brightness, you can project them with the conditions pre-registered for each signal, simply by selecting the corresponding signal.

(2) Equipped with a lamp output control function
You can set to any brightness setting, from low brightness to high brightness. This function makes it possible to minimize the fluctuation (*) in brightness as brightness of the lamp decreases as a result of long-term lamp usage.
* The time for maintaining fluctuations in brightness depends on the setting value for brightness.

(3) Easy lamp replacement
The lamp can be replaced from the backside of the projector, so the lamp can be easily replaced even in narrow locations when a film projector is setup on the side and there is not much space on the projector side.

(4) Registered signal selection buttons
The projector has been equipped with new 8 signal selection buttons that make it easy to select registered signals. To this projector, 100 titles at most can be registered (input signal registration). Among the registered titles, any 8 titles can be assigned to the buttons <1> to <8>.

(5) Touch panel (Optional)
An optional touch panel is available to enable easy operation of all projector functions.

(6) Supports various contents and types of usage by applying a separately-sold multimedia switch.
By connecting an optional multi-media switcher (MMS), you can input RGB/VIDEO analog signals, and digital signals in formats not supported by the projector.

- DMD Face Dust Protection Structure

A dust contral shield is arranged between each DMD chip of R, G and B, and the spectroscopic/condenser prism to prevent dust and dirt in the air, and oily particles in smoke associated with event halls from coming into contact with the face of the DMD and causing operating problems.

- Efficient cooling of the heat from the DMD unit by the cooling structure

The DMD unit uses a highly efficient liquid cooling method. This efficiently eliminates heat applied to the DMD by the complete dust contral structure and high light output, thereby ensuring the reliability of the projector.

- Up-to-date functions of DLP Cinema® available

This projector supports CineLink™, CineCanvas™, CinePallette™ and CineBlack™ which are the new functions for security, subtitles, etc., developed by Texas Instruments Incorporated.

(1) CineLink™: Security management
This function supports encryption of the local link between server and projector, adds a "watermark" to enable the tracing of pirated films (illegal copying), and provides other functions.

(2) CineCanvas™: Image management
This function enables insertion of subtitles and captions, correction of distortion, changing of resolution, etc.

(3) CinePallette™: Color management
This function allows extension of color range, correction of color, etc.

(4) CineBlack™: Contrast management
This function realizes a color tone scale from pitch black to pure white.

- DLP, DLP Cinema and their respective logos are trademarks or registered trademarks of Texas Instruments.
- CineLink, CineCanvas, CinePallette, and CineBlack are trademarks of Texas Instruments.

1-2. What's in the Box?

Check the content of the accessories. The accessories are packed into two boxes. One is for the main unit, and the other contains the lamp power supply unit.

Contents of main unit box

☐ NEC2500S projector

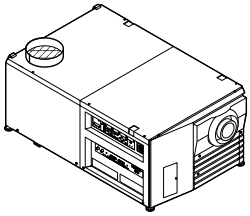

☐ Remote control (RD-371E)

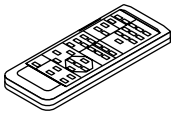

☐ UM-3 AA size battery (for the remote control) x 2

☐ Remote cable (16 m) x 1

☐ Ferrite clamp core for DVI-D signal cable x 2

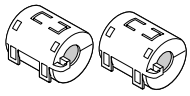

☐ Band x 2

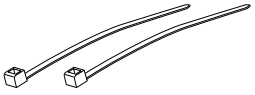

☐ Lens holder (NC-PH01)

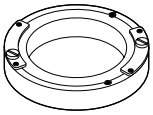

☐ Exhaust outlet protective sheet x 1

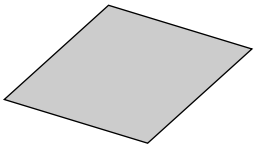

☐ Exhaust outlet protective sheet fastening band x 4

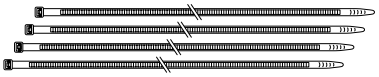

☐ Small iris x 1

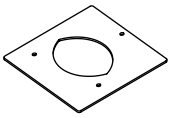

☐ Lamp door key x 2

☐ Sheet of title labels (for 20 labels) x 2

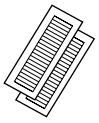

☐ User's Manual (This document)

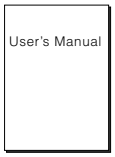

Contents of lamp power supply unit Box

☐Lamp Power Supply (With power cord)

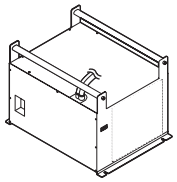

☐Dedicated interface cable x 1

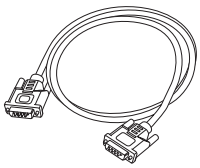

☐Ferrite clamp cores for AC power code x 4

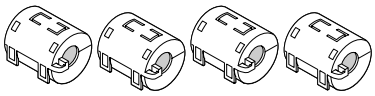

☐Ferrite clamp core for dedicated interface cable x 1

☐Band x 1

TIP In the event that you did not receive all of the accessories outlined above, or some are damaged, contact your dealer/distributor.
Differs slightly from the drawings in this manual, but there is no problem in actual use.

1-3. Names of the Projector Parts

1-3-1. Front of the projector

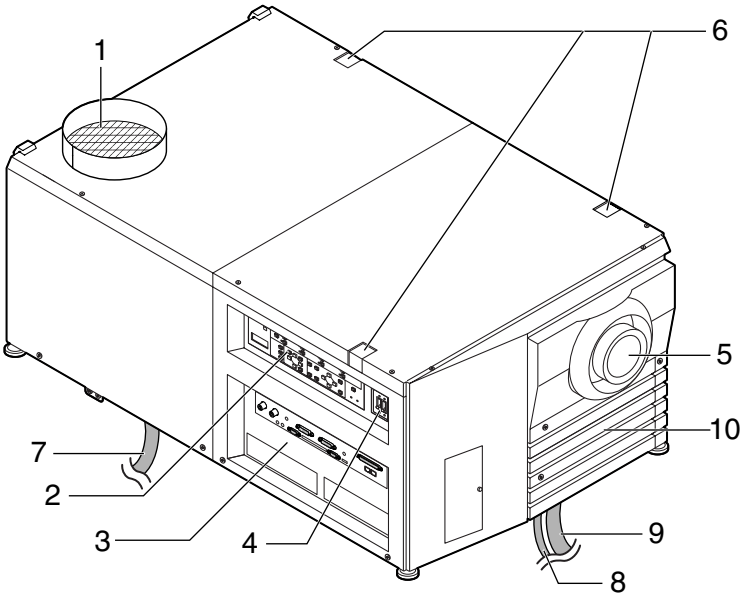

1. Air outlet
   Connects to an exhaust device to exhaust heat from the lamp. Please contact your dealer/distributor to install the exhaust device.
2. Control panel
   On the control panel, power to your projector is turned on or off, titles are selected, and various adjustments are made of projected screen. (See page 10)
3. Connection terminals
   Various image signal cable are to be connected here. (See page 9)
   You can expand signal input terminals by installing an optional multi-media switcher (MMS).
4. Main power switch
   While AC power is being supplied, set the main power switch to ON, then your projector will enter a standby state.
5. Lens (optional)
   Images are projected from the lens. Request your dealer/distributor to install or replace the lens.
6. Touch panel mounting opening (three position on top)
   Use the holder arm for the touch panel to attach the touch panel (optional).
7. Lamp power cord
   This is the power cord that connects with the lamp power supply unit. Request your dealer/distributor to connect/disconnect the power cord.
8. Dedicated interface cable
   This is the interface cable that connects with the lamp power supply unit.
9. AC power cord (For projector)
   This is the cord that supplies AC power to the projector head. The AC power cord is not an accessory. Consult with your dealer/distributor about the AC power cord.
10. Interlock connector (Inside front of projector)
    This is the connector for the projector safety device. This is used to control the projector from an external source. Consult with your dealer/distributor about using this.

NOTE Do not touch the air outlet and backside of the main unit when your projector is operating. Otherwise, the high temperature may cause burns.

1-3-2. Rear of the projector

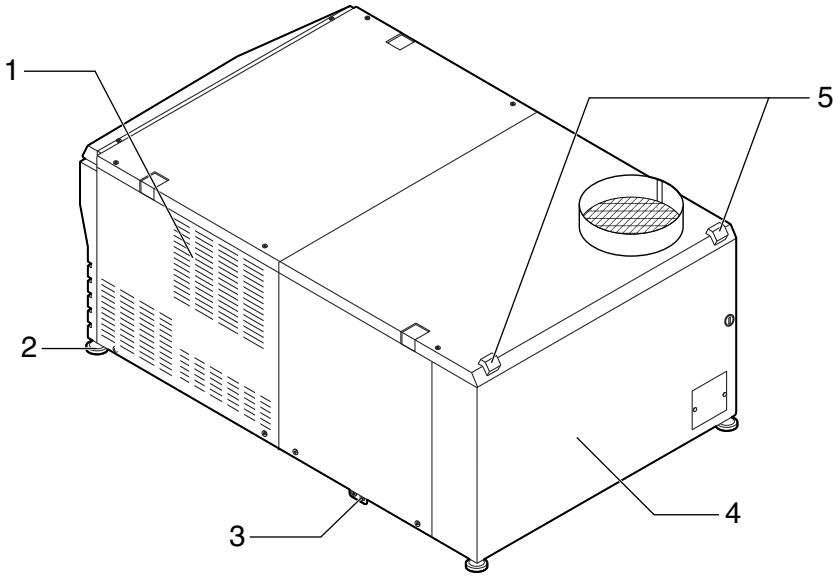

1. Air inlet

   Air is taken in here to provide cooling of the projector. Do not cover the air inlet.
2. Level adjusters (in four positions on bottom)

   In the ordinary installation, you can adjust the projector inclination at 4 positions.
3. Tilt feet (in two positions on bottom)

   These adjust the tilting angle of the projector. Please contact your dealer/distributor to setup and adjust this projector.
4. Lamp door

   This opens to allow the lamp to be replaced. Please contact your dealer/distributor to install and to replace the lamp bulb and lamp house.
5. Rear status indicator

   These indicate the status of the projector. When the projector is operating normally, these light/blink in green or orange. When an error occurs, they light/blink in red. When an error occurs, check the contents of the display on the LCD screen. (See page 39)

NOTE

- Do not cover the air inlet and outlet during operation. Inadequate air intake may lead to a rise in inside temperature, thus causing a free or serious projector failure.

Caution:
⚠ Only service personnel should open the lamp door.

1-3-3. Lamp power supply unit (LPSU)

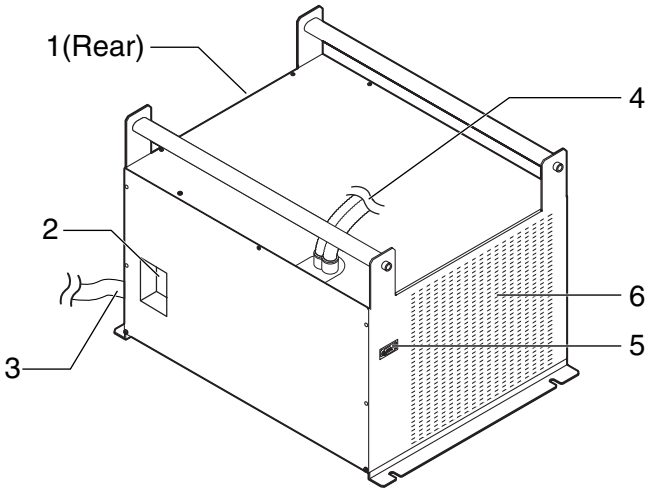

1. Air outlet
   This exhausts heat from the lamp power supply unit.
2. Main power switch
   This is the main power switch for the lamp power supply unit.
3. AC power cord
   The AC power cord is not an accessory. Request service personnel to connect the power cord.
4. Two lamp power cords
   These connect to the lamp power supply input terminals of the projector. Request service personnel to connect the power cord.
5. Control terminal (Dedicated interface cable)
   This connects to monitor the status of the lamp power supply unit from the projector head.
6. Air inlet
   Outside air is taken in here to lower the temperature inside the projector. Do not cover this inlet.

NOTE
- Do not touch the air outlet and backside of the main unit when your projector is operating. Otherwise, the high temperature may cause burns.
- Do not cover the air inlet and outlet during operation. Inadequate air intake may lead to a rise in inside temperature, thus causing a free or serious projector failure.

1-3-4. Connection terminals

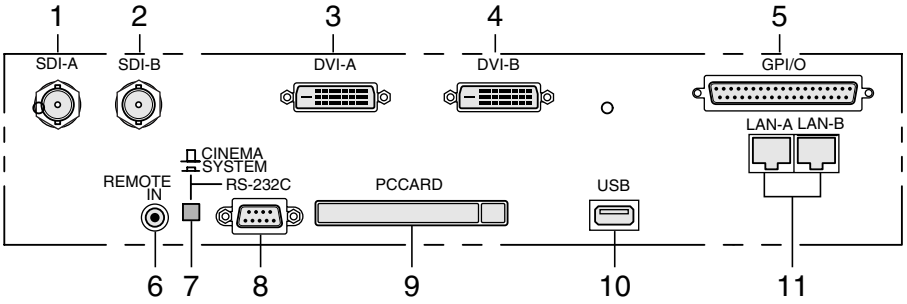

1. HDSDI A input terminal (SDI-A) (BNC)
   Connect a Video Server of Video source to this terminal. Use a 75Ω coaxial cable.
2. HDSDI B input terminal (SDI-B) (BNC)
   Connect a Video Server or Video source to this terminal. Use a 75Ω coaxial cable.
3. DVI-D A input terminal (DVI-A) (DVI-D 24P)
   Connect the DVI-D output terminal of a PC to this terminal. Use a commercially available DVI-D signal cable (Single Link).
4. DVI-D B input terminal (DVI-B) (DVI-D 24P)
   Connect the DVI-D output terminal of a PC to this terminal. Use a commercially available DVI-D signal cable (Single Link).
5. External control terminal (GP I/O) (D-Sub 37P)
   Use this terminal when controlling your projector from an external switcher. (See page 51)
6. Remote control input terminal (REMOTE IN) (Stereo mini)
   Connect the remote control of the projector, using the supplied remote control cable.

Memo

- The projector's remote control can be used by connecting with the remote control cable. (See page 14)

7. PC control signal switch (CINEMA/SYSTEM)
   Use this to set data on the projector.
8. PC control terminal (RS-232C) (D-Sub 9P)
   This is used when the service personnel sets the data for the projector or operates the projector from PC via RS-232C. Use a commercially available RS-232C straight cable to connect the projector to the PC.
9. PC card slot
   - Set a wireless LAN card, and you can control the projector from a PC, using a wireless LAN.
     Please inquire your dealer/distributor about a wireless LAN card that can be used.
   - Use this slot when doing maintenance on your projector.
10. USB port (USB) (type A)
    Use this port when doing maintenance on your projector.
11. Ethernet port (LAN-A, LAN-B) (RJ-45)
    Use this port when controlling your projector in LAN connection from a PC. Use a commercially available LAN cable (10Base-T/100Base-T) to connect the projector to the PC.

1-3-5. Control panel

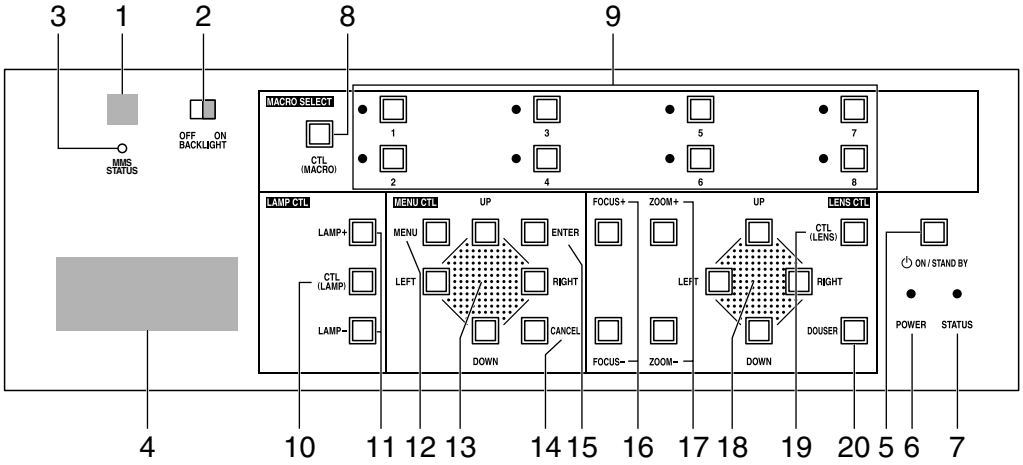

1. Remote control light reception unit
   This receives signals from the remote control.
2. BACKLIGHT switch
   Operate this switch to turn on/off the back light of the LCD screen and operation panel.
3. MMS STATUS indicator
   This indicates the link status of the optional multi-media switcher (MMS).

Off	When not using multi-media switcher.
Green lighting	When linked to built-in multi-media switcher.
Orange lighting	When linked to external multi-media switcher.
Green or Orange blinking	Preparing link with multi-media switcher.
Red blinking	When a link error occurs.

4. LCD screen
   The liquid crystal display screen shows menus and setting values for the operation of your projector.
5. POWER button
   Press this button to turn on or off (standby) he power to your projector. Press this for more than three seconds.
   When turning on the power to the projector, first set the main power switch to the main unit and the LPSU to ON, thereby setting the projector in a standby state. (See page 19)
6. POWER indicator

Green lighting	When power is on.
Green blinking	When the douser is closed.
Orange lighting	When the power is off (in standby state).
Orange blinking	When the cooling fan(s) is running immediately after power-off.

7. STATUS indicator

Off	When the projector is operating normally.
Red blinking	When an error has occurred. An error code is displayed on the LCD screen.

8. CTL (MACRO) button
   Press the CTL (MACRO) button together with MACRO SELECT 1 to 8 buttons.
   MACRO SELECT<1> to <8> button does not work individually.

9. 1 to 8 buttons

Press the 1 to 8 buttons while depressing the CTL (MACRO) button to select titles (input signals) assigned to each button. To this projector, 100 titles at most can be registered (input signal registration). Among the registered titles, any 8 titles can be assigned to the buttons <1> to <8>.

The indicator to the left of the buttons show the assigned/selected status of titles.

Green lighting	When any title is assigned to the button.
Orange lighting	When title is selected.
Off	When any title is not assigned to the button.

10. CTL (LAMP) button

Press the CTL (LAMP) button together with the LAMP +/- buttons.

<LAMP +/-> button does not work individually.

11. LAMP +/- buttons

Press the LAMP +/- buttons while depressing the CTL (LAMP) button to adjust the output (brightness) of the lamp. (See page 23)

12. MENU button

Press this button, and menus for various settings and adjustments will be displayed. (See page 26)

13. [MENU CTL] UP/DOWN/LEFT/RIGHT buttons

Press the [MENU CTL] UP/DOWN/LEFT/RIGHT buttons when the menu is displayed to select menu items.

14. CANCEL button

Press the CANCEL button to return to previous menu item.

15. ENTER button

Press the ENTER button, and the displayed menu item is actioned.

16. FOCUS +/- buttons

Press the FOCUS +/- buttons while depressing the CTL (LENS) button to adjust the focus of the projected image. (See page 23)

17. ZOOM +/- buttons

Press these buttons while depressing the CTL (LENS) button, for fine adjustment of the size of projected image. (See page 23)

18. [LENS CTL] UP/DOWN/LEFT/RIGHT buttons

Press the [LENS CTL] UP/DOWN/LEFT/RIGHT buttons while depressing the CTL (LENS) button to move (lens shift) the position of the projected image up, down, left and right. (See page 22)

19. CTL (LENS) button

Press the CTL (LENS) button together with the FOCUS +/- button, the ZOOM +/- button, the [LENS CTL] UP/DOWN/LEFT/RIGHT button and the DOUSER button.

The FOCUS +/-, ZOOM +/- [LENS CTL] UP/DOWN/LEFT/RIGHT and DOUSER buttons do not function when pressed alone.

20. DOUSER button

Press the DOUSER button while depressing the CTL (LENS) button to open and close the douser.

1-4. Names on the Remote Control

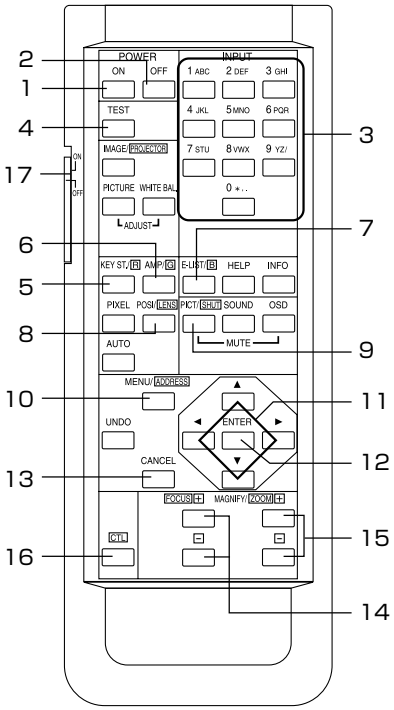

1. POWER ON button

Operate this button to turn on the power to your projector. Press it three seconds or longer.

When turning on the power to your projector, first set the main power switch to the main unit and the LPSU to ON, which puts your projector on standby. (See page 19)

2. POWER OFF button

Operate this button to turn off (standby) the power to your projector. Press it three seconds or longer.

3. Numeric buttons (1 to 0 buttons)

Use these buttons to enter alphanumeric characters. (See page 28)

4. TEST button

- Press this button, and a test pattern will be displayed.
  Check the test pattern on the LCD screen by pressing the SELECT ◀/▶ button, then press ENTER to set your selection.
  To cancel the test pattern display, reselect the signal to project.

5. KEYSTONE / R button

Press the KEYSTONE(R) button while depressing the CTL button, then the red (R signal) of the test pattern will be turned off temporarily. Press this button again while depressing the CTL button, and the red (R signal) will be projected again.

6. AMPLITUDE / G button

Press the AMPLITUDE (G) button while depressing the CTL button, then the green (G signal) of the test pattern will be turned off temporarily.

Press this button again while depressing the CTL button, and the green (G signal) will be projected again.

7. ENTRYLIST / B button

Press the ENTRYLIST (B) button while depressing the CTL button, then the blue (B signal) of the test pattern will be turned off temporarily.

Press this button again while depressing the CTL button, and the blue (B signal) will be projected again.

8. POSI / LENS button

Press the POSI/LENS button while depressing the CTL button, to adjust the position of projected screen (Lens Shift Mode). (See page 28)

9. PICT / SHUT button

- Press this button to turn off image projection temporarily. Press it again, and the image will be projected again.
- Press the PICT / SHUT button while depressing the CTL button, then the douser sill operate to shut off the light for projection. The POWER indicator blinks in green while the douser is operating. Press this button again while depressing the CTL button to cancel the operation of the douser.

NOTE When GPIO Control is set to "Enable", it is not possible to turn the power on/off and the douser function.

10. MENU button

Operate this button, and menus for various settings and adjustments will be displayed on the LCD screen. (See page 26)

11. SELECT ▼▲◀▶ buttons

- Press the SELECT ◀/▶ button when the menu is displayed, and a menu item can be selected.
- Press the SELECT ▼ button when the menu is displayed, and a submenu will be displayed.
- Press the SELECT ▲ button when the menu is displayed, and a menu one level above will be displayed.
- During character entry, press the SELECT ◀ button while depressing the CTL button, then one character will be deleted.

12. ENTER button

Press the ENTER button, and the displayed menu item is actioned.

13. CANCEL button

Press the CANCEL button to return to the previous menu item.

14. FOCUS +/- buttons

Press the FOCUS +/- button while depressing the CTL button, to make lens focus adjustment. (See page 23)

15. ZOOM +/- buttons

Press the ZOOM +/- button while depressing the CTL button, to make lens zoom adjustment. (See page 23)

16. CTL button

The CTL button is a shift function used to access alternative functions on other buttons.

17. Back light switch

When this is turned "ON," the characters on the remote controller will light up.

- When using the remote control with infrared ray signals
  If the remote control device is not operated for 30 seconds after turning "ON" the back light switch, the back light switch will automatically extinguish itself. Thereafter, it will light again when the remote control buttons are operated.
- When using the remote control connected to the remote control cable
  The back light will constantly light when the power to the projector is turned on and when the projector is in standby status.

NOTE

The following buttons cannot be used with this projector:
WHITE BAL., ADJUST PICTURE, IMAGE, INFO., PIXEL., MUTE SOUND, MUTE OSD, HELP, AUTO, UNDO

Inserting the batteries

[1] Remove the battery case cover on the backside of the remote control.
[2] Insert the UM-3 size AA batteries into the case. Be careful of the direction poles on the batteries.
[3] Restore the cover.

NOTE

- When replacing the batteries, always purchase two of the same type of UM-3 size AA batteries.

Effective range of the remote control

To operate the remote control using infrared rays, and not using the remote control cable, point the remote control transmission unit toward the remote control reception unit on the projector. Signals from the remote control can generally be received within the range shown in the figure below.

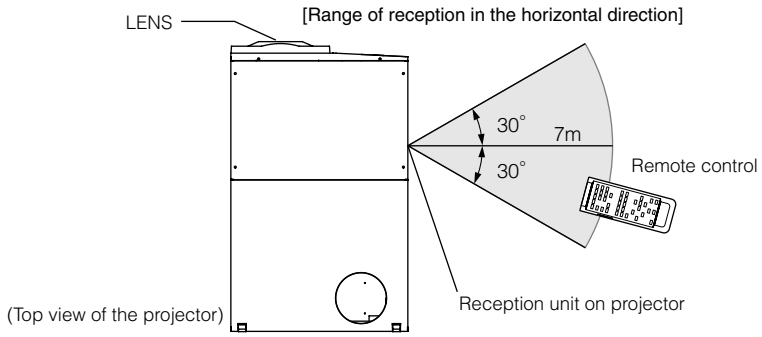

(Note) The effective range depicted in the figure may differ slightly in actual use.

Using the remote control cable

Use the remote control cable when there are objects that interrupt or obstruct the space between the remote control reception unit on the projector and the remote control, or when you are using the remote control beyond its effective range.
Note that the remote control cable is connected first to the remote control, then to the projector head.

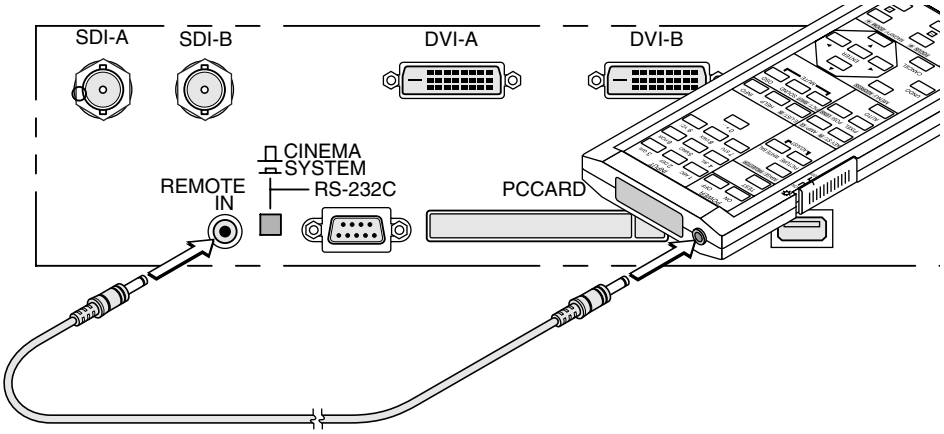

Notes for use of the remote control

- Do not drop or handle the remote control in a careless manner.
- Do not allow the remote control to be splashed with water or any other liquid. If the remote control should get wet accidentally, wipe the liquid off immediately.
- Be sure to use the remote control in a place free from heat or dampness as far as is practicable.
- The remote cable is connected first to the remote control, then to the projector head. The leading end of the remote cable is the power supply unit, so be careful not to touch the other end of the remote cable to the projector head or other devices while only the remote cable is connected to the projector.

2. Installation and Connection

2-1. Steps for setting up and connecting

Use the following steps for setting up your projector:

- Step 1

Setup the screen and projector. (Contact your dealer to carry out the setup.)

- Step 2

Connect cables to the image input terminals. (See page 16)

Connect cables to the various control terminals. (See page 17)

2-2. Connecting the image input terminals

Your projector has four image input terminals, namely, the HDSDI A input terminal, the HDSDI B input terminal, the DVI-D A input terminal, and the DVI-D B input terminal.

- HDSDI A/B input terminal (SDI A/SDI B) ---------- Inputs serial digital images from a Video Server or Video source.
- DVI-D A/B input terminal (DVI A/DVI B) ---------- Inputs digital RGB signals from a PC.

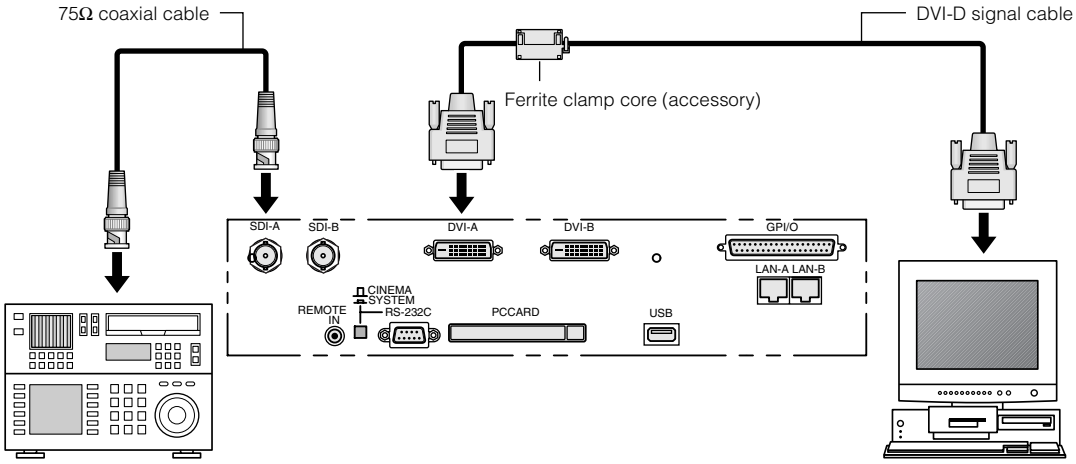

• Information for Reducing Radiation of Electromagnetic Waves

To reduce unnecessary radiation of electromagnetic waves, use the supplied ferrite clamp core.

• Mounting the ferrite clamp core

1 Open the accessory ferrite clamp core and attach it to the DVI-D signal cable.

When doing so, attach this as close as possible to the end that goes to the projector.
* Push the catch to open the ferrite clamp core.

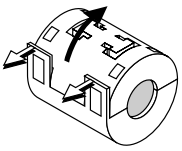

2 Close the ferrite clamp core tightly.

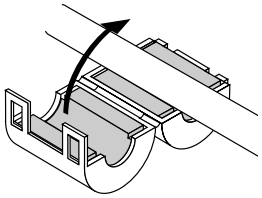

3 Fix the supplied band to the signal cable as a stopper.

* Pull the end of the band to tighten it. Cut off the surplus of the band.

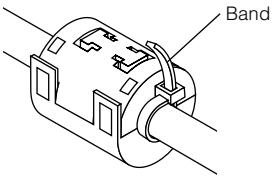

NOTE Be sure to use the ferrite clamp core at the end of the DVI-D signal cable.

2-3. Connecting the various control terminal

For control, your projector comes with such ports as the PC control terminal and the Ethernet port (RJ-45).

- PC control terminal (PC CONTROL) ----- Use this terminal when controlling the projector in serial connection from a PC.
- Ethernet port (LAN 1/LAN 2) ---------- Use this port when controlling the projector in LAN connection from a PC.

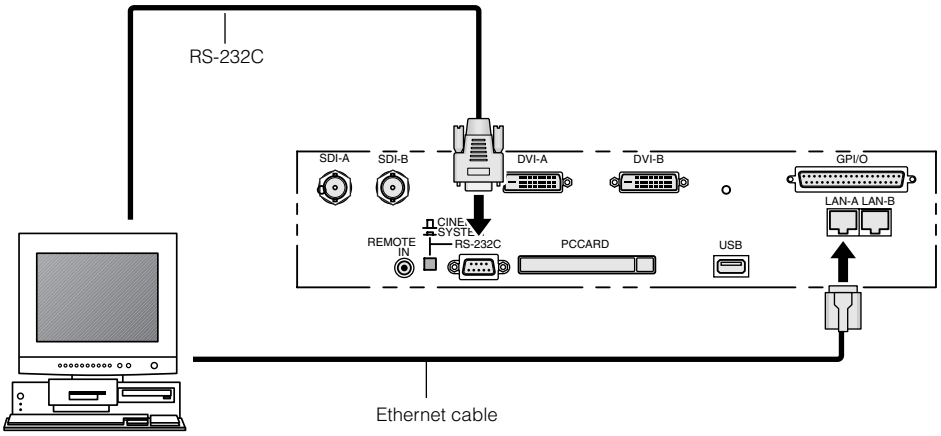

3.
Projection of Images (Basic Operation)

3-1. Steps of projecting images

- Step 1

Turn on the power to the projector. (See page 19)

- Step 2

Select the title of input signal. (See page 21)

- Step 3

Adjust the position and size of the projected screen. (See page 22)

- Step 4

Turn off the power to the projector. (See page 24)

3-2. Turning your projector on

The power to this projector is separated to the power to the projector head and power to the lamp. To project an image, it is necessary for both power supplies to be on.

Preparation: Supply AC power to the projector head and to the lamp power supply unit.
Please contact your dealer/distributor to connect the power cord.

NOTE

- Turn off the main power switch to the projector head and the lamp power supply unit when supplying or cutting AC power to the projector and the lamp power supply unit.
  If power is supplied or cut while the main power switch is turned on, the projector will be damaged.
- Be sure to turn your projector on or off in two steps of operation with the “main power switch” and the “POWER button” (“POWER ON/OFF button” on the remote control).
- Turning power on (See this page)

[1] Turn the “main power switch” on the lamp power supply unit and the projector head to on.
Your projector is set in a standby state.

[2] Press the POWER button (POWER ON button on the remote control) three seconds or longer.
Your projector is turn on.

- Turning power off (See page 24)

[1] Press the POWER button (POWER OFF button on the remote control) three seconds or longer.
Your projector is set in a standby state.

[2] When the fan has stopped running, set the “main power switch” on the lamp power supply unit and the projector head to OFF.
Your projector is turned off.

1 Remove the lens cap.

2 Turn the main power switch on the lamp power supply unit to on.

The lamp power unit fan will begin rotating.

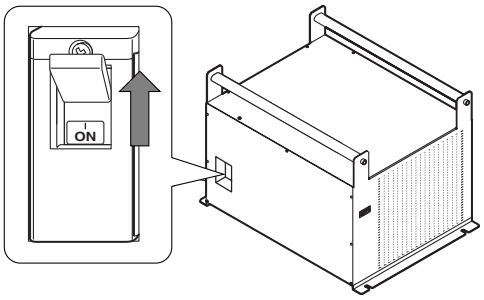

3 Turn the main power switch on the side of your projector head to on.

A buzzer will ring on the projector. The POWER indicator and rear STATUS indicator light up orange (standby state).

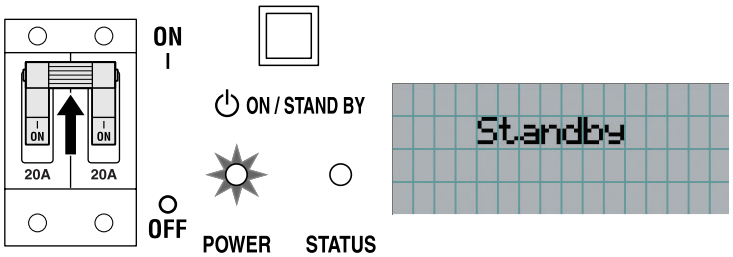

4 Press the POWER button on the control panel of your projector three seconds or longer.

Your projector is turn on, and the screen glows light about 30 seconds later. The POWER indicator of the projector lights up green.

- When controlling with the remote control, press the POWER ON button three seconds or longer.
- When the power to the projector head turns on, an error will occur (lamp power error: LPSU Fail) if the power to the lamp power supply unit is OFF. Turn the power on to the lamp power supply unit prior to turning on the power to the projector head.

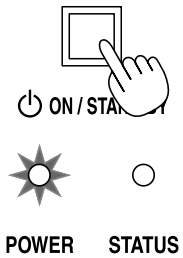

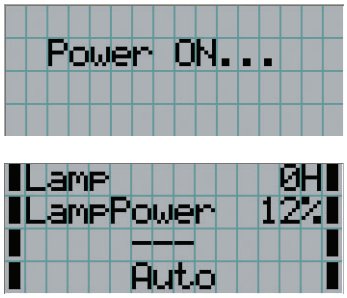

NOTE

- While your projector is on, be sure to have the lens cap removed from the lens.
  Otherwise, the lens cap may get deformed due to a heat buildup.
- In the following instances, the power to your projector cannot be turned on even if you press the POWER button.
  - When the inside temperature is abnormally high. The protective function prevents power from turning on. Wait some time (until the projector inside cools down) and then turn on the power.
  - When the STATUS indicator is blinking without the lamp lighting up after power-on. Your projector may be in trouble. Check the error display on the LCD screen and contact your dealer/distributor for instructions.
- Note that the image may sometimes flicker until the lamp has stabilized (5 to 10 minutes) after power-on. This is due to the characteristics of the lamp and is not trouble of your projector.

3-3. Selecting the title of input signal

This projector allows you to select pre-registered signals using the signal selection buttons on the control panel (up to 8 signals). Request your dealer/distributor for details on registering and changing titles. This section explains the steps for selecting registered signals.

1 Turn on the power to the image devices connected to the projector.

2 Press the MENU button.

3 Press the [MENU CTL] LEFT/RIGHT button to display “Title Select” on the LCD screen.

At each press of the [MENU CTL] LEFT/RIGHT buttons, the display will cycle as “Title Select” ←→ “Configuration” ←→ “(Title Setup)” ←→ “Information.”

4 Press the [MENU CTL] DOWN button.

The title of the input signal is displayed.

- When you have made a wrong selection, press the [MENU CTL] UP button. A return will be made to the previous menu.

5 Press the [MENU CTL] LEFT/RIGHT buttons to display “Title of Signal to be Projected” on the LCD screen.

6 Press the ENTER button.

The title of the signal to be projected is selected.

- The (*) mark on the LCD indicates that this is the currently selected item.

3-4. Adjusting the position and the size of projected screen

3-4-1. Displaying the test pattern

1 Press the TEST button on the remote control. Alternatively, select the test pattern from the signal selection button.

If you register the test patterns to the signal selection buttons (<1> to <8> buttons), select the test pattern according to "3-3. Selecting the title of input signal (See page 19)".
The mode for selecting the test pattern is set.

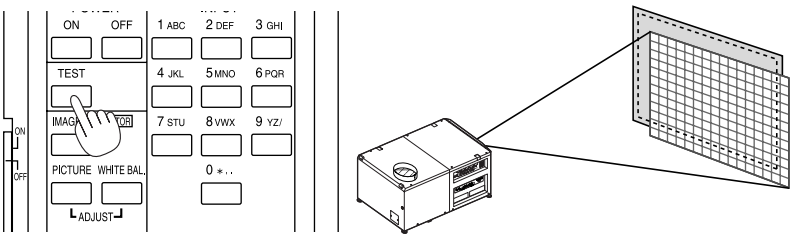

2 Press the SELECT ◀/▶ button.

The display of the test pattern name on the LCD switches.

3 Display on the LCD the name of the test pattern to be projected, then press the ENTER button.

The test pattern is displayed.
• To cancel the test pattern display, reselect the signal to be project.

3-4-2. Adjusting the position of the projected screen (Lens shift)

1 Press the [LENS CTL] UP/DOWN/LEFT/RIGHT buttons while depressing the CTL (LENS) button, on the control panel of your projector as required.

The position of the projected screen will move upward, downward, left or right.
• When controlling with the remote control, press the POSI/LENS button while depressing the CTL (LENS) button.

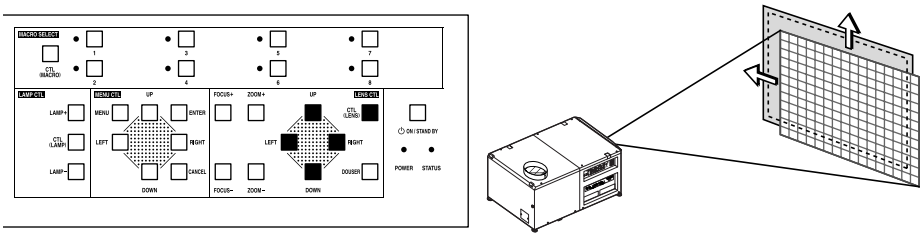

3-4-3. Fine adjustment of the size of the projected screen (Zoom)

1 Press the ZOOM +/- buttons while depressing the CTL (LENS) button on the control panel of your projector as required.

- When controlling with the remote control, press the ZOOM +/- button while depressing the CTL (LENS) button.

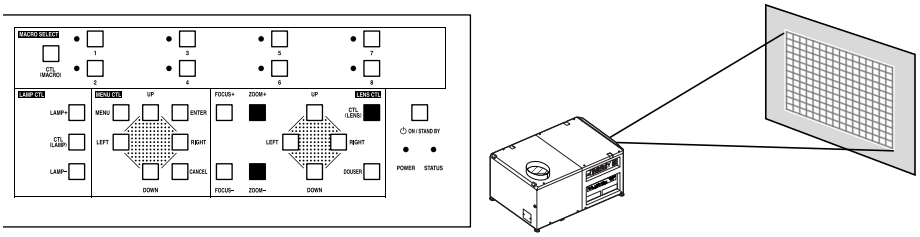

3-4-4. Focusing the projected screen (Focus)

1 Press the FOCUS +/- buttons while depressing the CTL (LENS) button, on the control panel of your projector as required.

- When controlling with the remote control, press the FOCUS +/- button while depressing the CTL (LENS) button.

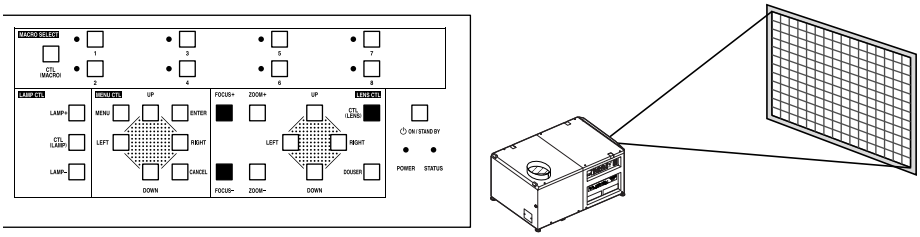

3-4-5. Adjusting the brightness of the projected screen (Lamp output)

1 Press the LAMP +/- buttons while depressing the CTL (LAMP) button, on the control panel of your projector as required.

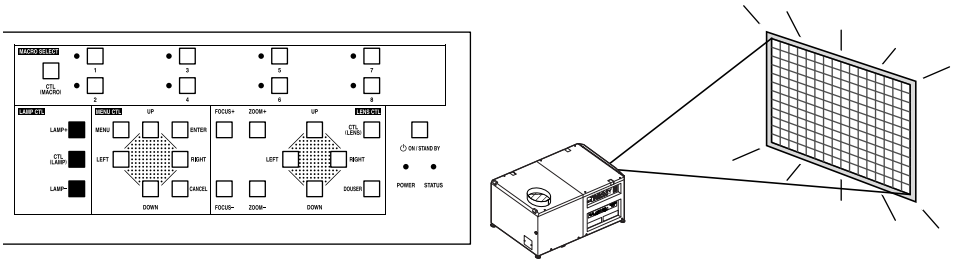

3-5. Turning your projector off

1 Press the POWER button on the projector control panel for three seconds or longer.

The power to the projector is turned off. The POWER indicator and rear STATUS indicator will blink in orange (cooling state).
The fan will continue to rotate while cooling, and the amount of time remaining for cooling is displayed on the LCD screen. The cooling-off time is 5 minutes.
When cooling has ended, the POWER indicator and the rear STATUS indicator light in orange (Standby).

- When controlling with the remote control, press the POWER OFF button for three seconds or longer.

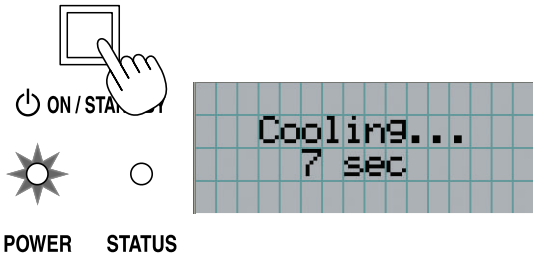

2 When the projector has entered the standby state, turn the main power switch on the projector head to off.

The projector POWER indicator will extinguish and the main power will turn off.

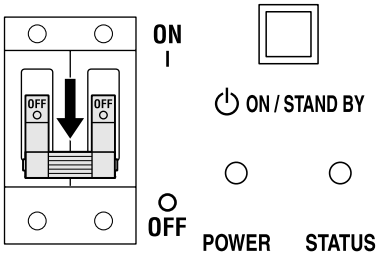

3 Turn the main power switch on the lamp power supply unit to off.

The fan will continue to rotate for a short amount of time (approximately 5 seconds) immediately after turning off the power.

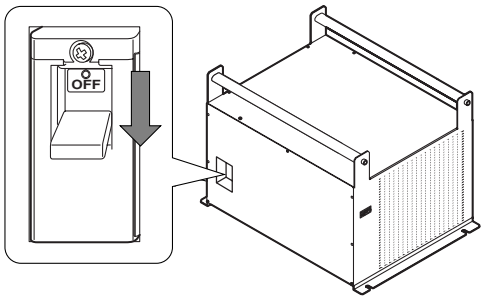

4 Turn off the AC power to the projector head and to the lamp power unit.

NOTE
- In the following instances, do not turn off the main power switch or disconnect the AC power. Doing so can damage the projector.
  - While projecting images
  - While the fan is running after the power is turned off (The cooling-off time is 5 minutes)

4. Using Menus

4-1. Basic operation with adjustment menus

To adjust the projector, display the menu on the LCD screen of the projector control panel.

4-1-1. Screen display

The menu display screen is composed of a menu display field (the upper two lines) and a setting item display field (the bottom two lines).

← Displays the main menu or submenus.
← Displays submenus or selection items.
← Displays settings and selection status.
← Displays settings, selected items and information on selected menus.

The meanings of symbols in the menu display screen are outlined below.

	Indicates that there is a menu of a higher level. Press the [MENU CTL] UP button to return to a menu one level above.
	Indicates that there is a selected item or menu at the same level. Press the [MENU CTL] LEFT/RIGHT button to display other selected items or menus.
	Indicates that there is a menu of a lower level. Press the [MENU CTL] DOWN button to display the menu one level below.
	Indicates that there are setting items of a lower level. Press the [MENU CTL] UP button to return to a menu one level above. Press the [MENU CTL] DOWN button to display the setting item one level below.

When not displaying menus, the following screen is normally displayed.

When in standby

When the projector is in a standby state (the main power switch in on), the following is displayed.

When power is turned on

When the power is turned on, the following is displayed.

← Displays the hours of lamp bulb use.
← Displays the lamp output (%).
← Displays the selected title.
← Displays the selected port.

When the power is turned off

The amount of time remaining for cooling is displayed as shown below, when the power to the projector head is turned off.

4-1-2. Operating menus

Preparation: Turn your projector on. (See page 19)

1 Press the MENU button on the control panel of your projector .

The menu is displayed in the LCD screen.

2 Press the [MENU CTL] LEFT/RIGHT buttons to display “Information.”

At each press of the [MENU CTL] LEFT/RIGHT buttons, the display will cycle as “Title Select” ←→ “Configuration” ←→ “(Title Setup)” ←→ “Information.”

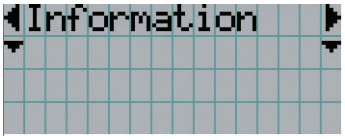

3 Press the [MENU CTL] DOWN button.

The submenu “Lamp” of “Information” is displayed.
The menu item can be selected by pressing the ENTER button instead of the SELECT DOWN button
To return to the previous state, press the [MENU CTL] UP button, or the CANCEL button.

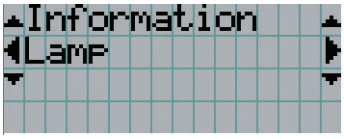

4 Press the [MENU CTL] LEFT/RIGHT button to select the submenu “Version.”

At each press of the [MENU CTL] LEFT/RIGHT button, the display will cycle as “Lamp” ←→ “Macro Key” ←→ “Usage” ←→ “Error Code” ←→ “Version” ←→ “IP Address” ←→ “MMS Status.”

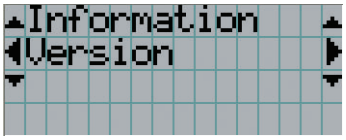

5 Press the [MENU CTL] DOWN button.

The submenu “System” another rank lower than “Version” is displayed.

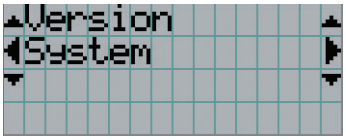

6 Press the [MENU CTL] DOWN button.

The submenu “BIOS” another rank lower than “System” is displayed.

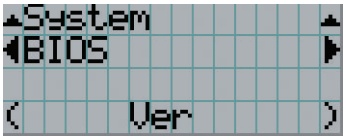

7 Press the [MENU CTL] LEFT/RIGHT button to select the submenu “Data.”

At each press of the [MENU CTL] LEFT/RIGHT button, the display will cycle as “BIOS” ←→ “Firmware” ←→ “Data” ←→ “Serial No.,” and each version information is displayed.

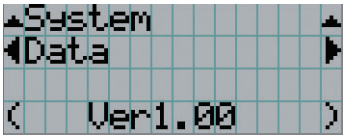

8 Press the [MENU CTL] UP button several times.

At each press of the [MENU CTL] UP button, the display will return to a menu one level above.

4-1-3. How to enter alphanumeric characters

Alphanumeric characters are entered for items, such as the title of input signal.
With this projector, the characters are inputted by pressing numeric buttons on the remote control.

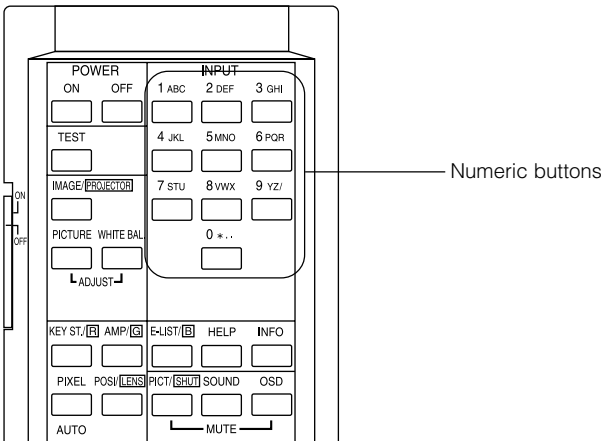

By pressing the numeric buttons, the characters can be inputted as shown in the table below.

• To delete a character during entry, press the SELECT ◀ button while depressing the CTL button.

[Example of Entry]

To enter "XGA" for example, use the following procedure:

(1) Press the 8 button three times.
V → W → X

(2) Press the SELECT ▶ button.

(3) Press the "3" button.
XG

(4) Press the SELECT ▶ button.

(5) Press the "1" button.
XGA

Numeric button	Press directly	While depressing CTL button
1	A → B → C → 1 →	a → b → c → ! →
2	D → E → F → 2 →	d → e → f → î →
3	G → H → I → 3 →	g → h → i → # →
4	J → K → L → 4 →	j → k → l → $ →
5	M → N → O → 5 →	m → n → o → % →
6	P → Q → R → 6 →	p → q → r → & →
7	S → T → U → 7 →	s → t → u → í →
8	V → W → X → 8 →	v → w → x → (→
9	Y → Z → / → 9 →	y → z → ? →) →
0	* → . → . → 0 →	; → : → + → _ →

NOTE • To input characters using the remote control, only numbers can be entered with [password] and the security [keyword].

4-2. Table of adjustment menus

Menus in parentheses are menus for our service personnel. Normally, these menus cannot be used.

Main menu	Submenu		Description	Reference page
Title Select	"Title Memory Name"		Selects the title of the signal to be projected.	30
	TEST Pattern		Selects the test pattern to be projected.	30
Configuration	Lamp Setup	Adjust	Adjusts lamp brightness.	31
		Feedback	Sets the lamp brightness constant mode that uses a brightness sensor.	31
	(Setup)	Douser Mode	Selects whether to use the douser (screen mute) when switching signals.	-
		Turret	Controls the turret mounted with an anamorphic lens.	-
		Ext. MMS Link	Sets whether to connect an external multi-media switcher (MMS).	-
		Panel Key Lock	Locks the buttons on the projector's control panel so that they cannot be operated.	-
		GPIO Port	Selects the target of GPIO port control.	-
		FactoryDefault	Returns the settings to their default values (only macro keys and titles, or all settings).	-
	(Installation)	Image Orient	Selects the projection method (front/rear).	-
		Lens Center	Moves the lens shift position to the center.	-
		MMS Select	Selects the multi-media switcher (MMS) to connect.	-
		Baudrate	Sets the PC control connector (RS-232C) data transmission speed (bps).	-
		Date/Time	Sets the date and time on the projector.	-
		(New Bulb)	Resets the lamp bulb usage time and selects or edits new entries (only when the projector is in standby mode).	-
		(Bulb Warning)	Sets the lamp bulb warning time (only when the projector is in standby mode).	-
		(New Lamp House)	Resets the lamp house usage time, and makes settings or selects modes (only when the projector is in standby mode).	-
		Bulb Alignment	Sets the lamp bulb alignment.	-
	(Memory)	Lamp	Saves the current lamp setting.	-
		Lens	Saves the current lens setting.	-
(Title Setup)	Macro Key	Macro Key No.1-8	Sets the titles to be assigned to the macro keys of 1 to 8.	31
Information	Lamp	Output	Displays the lamp output setting.	32
		Bulb Type [A]	Displays the registered name and the maximum/minimum current setting of the currently used lamp bulb.	32
		Bulb Type [W]	Displays the registered name and the lamp rated output (kW) of the currently used lamp bulb.	32
		Bulb Type [H]	Displays the registered name and the lamp bulb warning time (Bulb Warning Time) setting of the currently used lamp bulb.	32
	Macro Key	Macro Key No.1-8	Displays the titles assigned to the macro keys of 1 to 8.	32
	Usage		Displays the usage times of the projector, lamp bulb, lamp house and bulb warning.	33
	Error Code		Displays the currently occurring error.	33
	Version	System	Displays the version of the projector head. (BIOS, Firmware, Data, and Serial No.)	34
		MMS(Built-in)	Displays the version of the built-in multi-media switcher (MMS). (BIOS, Firmware, Data, FPGA, and Serial No.)	34
	IP Address	System	Displays the SYSTEM IP address.	35
		Cinema	Displays the CINEMA IP address.	35
	MMS Status		Displays the link-status of the connected multi-media switcher (MMS).	35

4-3. Title Select

4-3-1. Title select (Title Memory)

Selects the title of the signal to be projected.
You can register up to 100 titles. You can also assign registered titles to the Macro keys of 1 to 8 on the projector's control panel and call them up directly using those buttons.
Request your dealer/distributor for details on registering and changing titles.

← Displays the currently selected item with asterisk (*).
← Selects the title to be projected.

4-3-2. Test Pattern

Selects the test pattern to be projected.

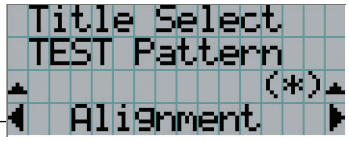

← Displays the currently selected item with asterisk (*).
← Selects the test pattern to be projected.

OFF, Alignment, Cross Hatch, Convergence, Red, Green, Blue, White, Black, White 50% [IRE], H-Ramp, Logo

4-4. Configuration

Please request your dealer/distributor to perform the settings.

4-4-1. Lamp Setup

Adjust

Adjusts the lamp output (brightness). Control the current at 0.1 A increments.

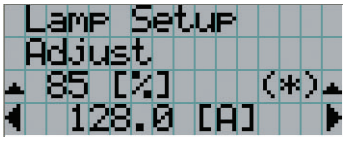

← Displays the lamp output (%) with regard to the setting.
← Adjusts the lamp brightness.

Feedback

Sets the lamp brightness constant mode that uses a brightness sensor.

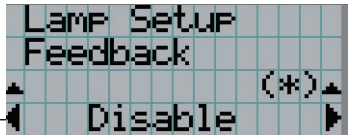

← Displays the currently selected item with asterisk (*).
← Displays the setting.

Disable	Disables the lamp brightness constant mode.
Enable	Enables the lamp brightness constant mode.

4-5. Title Setup

Sets the titles to be assigned to the macro keys.
Request your dealer/distributor to perform the settings.

4-6. Information

Displays the hours of lamp bulb use, the version information and error codes.

4-6-1. Lamp

Displays information relating to the lamp. (Such as lamp output and the information of lamp bulb.)

Output

Displays the lamp brightness (output) setting.

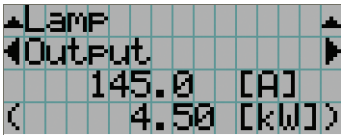

← Displays the set current (A).
← Displays the power consumption (kW).

Bulb Type [A]

Displays the registered name and the maximum/minimum current setting of the currently used lamp bulb.

← Displays Bulb Entry registered name.
← Displays Bulb Entry maximum/minimum currents (A).

Bulb Type [W]

Displays the registered name and the lamp rated output (kW) of the currently used lamp bulb.

← Displays Bulb Entry registered name.
← Displays Bulb Entry lamp rated output (kW).

Bulb Type [H]

Displays the registered name and the lamp bulb warning time (Bulb Warning Time) and setting of the currently used lamp bulb.

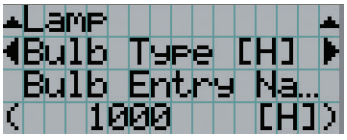

← Displays Bulb Entry registered name.
← Displays Bulb Warning Time setting (H).

4-6-2. Macro Key

Displays the titles assigned to the macro keys of 1 to 8 on the projector's control panel.

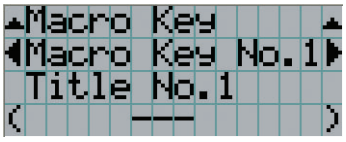

← Selects the macro key number whose contents you want to display.
← Displays the assigned title numbers.
← Displays the registered names of the assigned titles.

4-6-3. Usage

Displays the hours of projector head, lamp, and lamp house usage, and warning display time of the lamp bulb.

← Selects the item to display.

← Displays the hours of use (H).

Projector	Displays the hours of projector head use.
Bulb	Displays the hours of use of the current lamp bulb (Lamp utilization time).
Lamphouse	Displays the hours of use of the current lamp house.
BulbWarning	Displays the currently enabled warning time. The following is displayed depending on the item set by the Bulb Warning setting. • When Use Bulb Entry is enabled: Displays the Bulb Entry value. • When in Manual setting: Displays the value set using Manual.

4-6-4. Error Code

Displays the error code when an error occurs. See the “Error Code List” in the Appendix for details on error codes.

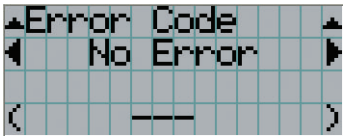

← Displays the code of the error currently occurring.

← Displays the name of the error currently occurring.

When multiple errors occur, you can display them by pressing the [MENU CTL] LEFT/RIGHT buttons.

4-6-5. Version

Displays the versions of the projector head, and the multi-media switcher (MMS) (optional).

System

Displays the version information of the projector head.

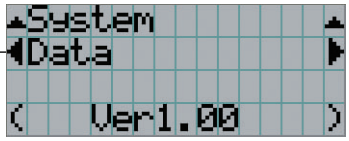

← Selects the item to display.

← Displays the version information.

BIOS	Displays the BIOS version of the projector head.
Firmware	Displays the firmware version of the projector head.
Data	Displays the data version of the projector head.
Serial No.	Displays the serial number of the projector head.

MMS (Built-in)

Displays the version of the multi-media switcher (MMS) connected to the projector head.

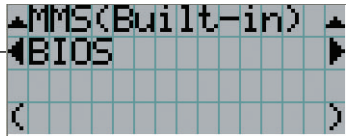

← Selects the item to display.

← Displays the version information.

BIOS	Displays the BIOS version of the built-in multi-media switcher (MMS).
Firmware	Displays the firmware version of the built-in multi-media switcher (MMS).
Data	Displays the data version of the built-in multi-media switcher (MMS).
FPGA	Displays the FPGA version of the built-in multi-media switcher (MMS).
Serial No.	Displays the serial number of the built-in multi-media switcher (MMS).

4-6-6. IP Address

Displays the IP address set in the projector head.

← Selects the item to display the IP address.

← Displays the IP address.

System	Displays the IP address set for the projector head (System).
Cinema	Displays the IP address set for the projector head (Cinema).

4-6-7. MMS Status

Indicates the status of the multi-media switcher (MMS) connected to your projector.

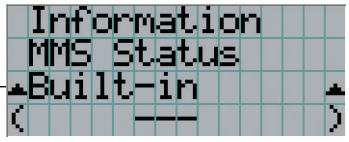

← Displays the status information of MMS linked operations.

← Displays the IP address.

Built-in	Built-in multi-media switcher (MMS) is linked.
External	External multi-media switcher (MMS) is linked.
Not Use	There is no link established.

5. Maintenance of Your Projector

NOTE Please request your dealer to perform lamp replacement, filter replacement and cleaning of the projector inside.

5-1. Cleaning the Cabinet

Be sure to always check that the AC power supply of the projector head and the lamp power supply unit is disconnected before carrying out maintenance of your projector.

- Wipe with a dry, soft cloth without nap.
  When the cabinet is excessively dirty, wipe with cloth well wrung after being dampened with a neutral detergent diluted with water and then finish up with a dry cloth.
  When you use a chemical dust cloth, follow the instructions in the manual attached to it.
- Do not use a solvent, such as thinner or benzene. The coating may deteriorate or peel off.
- When removing dust on the ventilation opening, suck it off using an adapter with a brush on a vacuum cleaner. Never allow the cleaner without an adapter to come into direct contact or use a nozzles adapter in cleaning.
- Clean the ventilation opening at regular intervals. Dust, if allowed to accumulate there, may cause heating inside, which leads to functional trouble. The interval, which can vary with the location of your projector, is about 100 hours.
- Do not damage the cabinet by scratching it or allowing hard objects to hit it. This can scratch the projector.
- Consult your dealer/distributor about cleaning the inside of the projector.

NOTE Do not allow insecticide or other volatile liquid to splash on the cabinet, lens or screen. Also, do not allow any rubber or plastic object to remain in contact with the cabinet for a long time. The coating may deteriorate or peel off.

5-2. Cleaning the Lens

Clean the lens the same way as with camera lens (using a commercially available camera blower or cleaning paper for glasses). Take care not to damage the lens when cleaning.

6. Appendix

6-1. Troubleshooting

Before asking for repair, please check your connection, settings and operation once again. If the trouble cannot be corrected, please contact your dealer/distributor for instructions or repair.

6-1-1. Problems and where to check

Problem	Check these items
The projector cannot be turned on.	Check to see if the power plug is properly connected to the outlet.
	Make certain that the main power switch is ON.
	Check to see whether the panel key lock function is activated. If so, the main unit's control buttons are locked and do not work, but the projector can be controlled using the remote control unit.
	Is the temperature inside the projector too high? When the inside temperature is too high, the protective function does not allow your projector to be turned on. Wait some time and then turn it on.
The image cannot be projected.	Check to see if the connected input has been selected.
	Check to see if a cable is properly connected to the input terminal.
	Check to see whether the douser is closed.
	Check to see if the settings are all adjusted properly.
The image is distorted.	Check to see if the protractor is properly set up.
The image is blurred.	Make certain that the lens is properly focused.
	Check to see if the screen and a projector are installed at correct angles.
	The projection distance may be larger than the focusing range.
	See if the lens and other parts have condensation on them. If the projector is turned on in a warm place after storage in a cold place, the lens and other optical components inside may develop condensation. In such a case, please wait several minutes until the comdensation disappears.
Video image is disturbed	Check whether the signal cable connected to the projector is disconnected.

Problem	Check these items
The projector cannot be operated with the remote control.	Make sure the remote control transmission unit is facing the light reception unit on the projector.
	Check whether the batteries are still good. Replace with new batteries.
	Check whether there is any obstructing object between the remote control and the light reception unit on the projector.
	Check whether you are outside of the remote control's effective range (7m).
	Check whether the remote control cable has become disconnected, if you are using the remote control by connecting with the remote control cable.
The STATUS indicator blinks in red.	Your projector may have trouble. Please contact your dealer/distributor for instructions.
An error code is displayed.	See the "Error Code List" (page 40).

6-2. Indicator display list

See the descriptions below when the blinking or lighting of the two indicators on the projector's control panel and the rear STATUS indicator on the backside of the projector is observed. The projector also has a warning function that uses a buzzer.

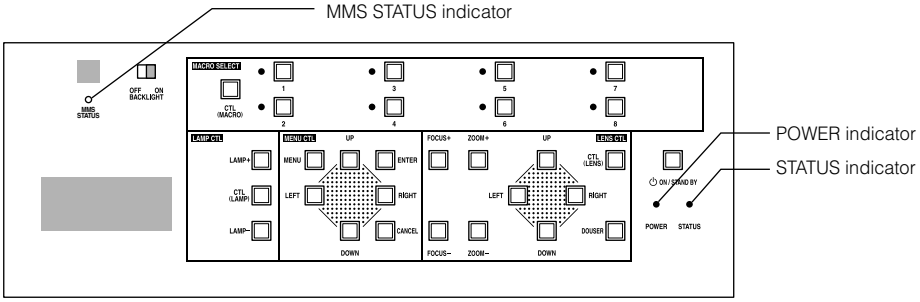

6-2-1. POWER indicator

Indicator condition		Projector condition	Note
Off		The main power is off.	-
Blinking light	Green	The projector is getting ready to turn on. The douser is closed.	Wait for a moment.
	Orange	The projector is cooling down.	Wait for a moment.
Steady light	Green	The projector is turned on.	-
	Orange	The projector is in standby.	-

6-2-2. STATUS indicator

Indicator condition	Projector condition	Note
Off	Normal	-
Blinking light (Red)	Error	An error message is displayed in the LCD screen. Check the content of the error.

6-2-3. MMS STATUS indicator

Indicator condition		Projector condition	Note
Off		Multi-media switcher (MMS) not in use.	-
Blinking light	Red	Link error	Link error. An error message is displayed in the LCD screen. Check the content of the error.
	Green	Preparing link with Built-in multi-media switcher (MMS).	Wait for a moment.
	Orange	Preparing link with External multi-media switcher (MMS).	Wait for a moment.
Steady light	Green	Built-in multi-media switcher (MMS) is linked.	-
	Orange	External multi-media switcher (MMS) is linked.	-

6-2-4. Rear STATUS indicator

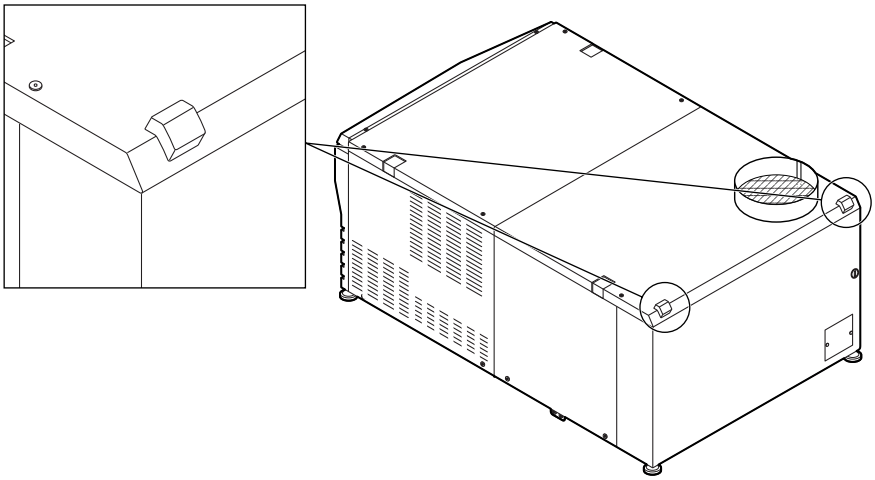

Indicator condition		Projector condition	Note
Off		Main power is off.	-
Blinking light	Green	The projector is getting ready to turn on. The douser is closed.	Wait for a moment.
	Orange	The projector is cooling down.	Wait for a moment.
	Red (With buzzer)	Safety problem, error	An error message is displayed in the LCD screen. Check the content of the error.
	Red (Without buzzer)	Error with possible image project under certain conditions.	
Steady light	Green	The projector is turned on.	-
	Orange	The projector is in standby.	-
	Red	Error at a level with not affect on projection.	An error message is displayed in the LCD screen. Check the content of the error.

6-3. Error code list

Please inquire your dealer/distributor about action to be taken for each error code.
Description is omitted for error codes 20 to 92.

Error code	Error message	Desctiption
1	Lamp Door Open	Lamp door is open.
2	Lamp OverTemp	Temperature (lamp temperature) is abnoramal.
4	GPSU Fail	Power supply is abnormal.
5	Lamp Unlit	Lamp doesn't light up.
6	House OverTime	Lamp house cumulative time is over.
8	LPSU OverTemp	Temperature (lamp power inside temperature) is abnormal.
10	DLP PGOOD Fail	Engine power is abnormal.
12	E2PROM R Fail	E2PROM data read error is detected.
13	Interlock Fail	Interlock error is detected.
15	E2PROM W Fail	E2PROM data write error is detected.
17	Pump Stop	Stopped for pump error.
20	System Fail	-
21	Self Test Fail	-
22	ARM Fail	-
23	DSP Fail	-
24	Interface FPGA Fail	-
25	Processor FPGA Fail	-
30	IB Diag Not Performed	-
31	IB FPGA Code Invalid	-
32	IB FPGA INITZ Fail	-
33	IB FPGA No-Load Set	-
34	IB FPGA DONE Fail	-
35	IB FPGA Reg R/W Fail	-
36	IB Framestore Test Fail	-
37	IB ANC FIFO Test Fail	-
38	IB RTC Serial # Fail	-
39	IB UART0 Fail	-
40	IB UART1 Fail	-
41	IB IIC Fail	-
42	IB Ethernet Fail	-
43	IB Sync-Serial Fail	-
44	IB File System Fail	-
45	IB Formatter Fail	-
46	IB Flash Protect Fail	-
47	IB GPI Macro Fail	-
48	IB A/D Macro Fail	-
60	PB Diag Not Performed	-
61	PB FPGA Code Invalid	-
62	PB FPGA INITZ Fail	-
63	PB McBSP XRDY Fail	-
64	PB FPGA Done Fail	-

Error code	Error message	Desctiption
65	PB FPGA Reg R/W Fail	-
66	PB Serial-ID Chip Fail	-
67	PB CLUT-SRAM Fail	-
68	PB OvFS-SDRAM Fail	-
69	PB Resizer FIR Fail	-
70	PB Resizer FIFO Fail	-
71	PB Other Fail	-
90	FB Red RDRAM Signature Fail	-
91	FB Green RDRAM Signature Fail	-
92	FB Blue RDRAM Signature Fail	-
123	Bulb OverTime	Lamp bulb cumulative time is over.
125	LPSU Fail	Lamp power supply is abnormal.
130	MMS Comm Fail	Built in MMS communication error is detected.
131	MMS Fan Stop	Built-in MMS fan has stopped
132	MMS Fail	Error occurred inside built-in MMS.
150-158	Fan0 Stop-Fan8 Stop	Fan has stopped.
160	GPSU Fan Stop	Fan has stopped.
161	AC Fan Stop	Fan has stopped.
170	OverTemp.Out	Set inside temperature (Outside Air) is abnormal.
171	OverTemp.In	Set inside temperature (Inside Air) is abnormal.
172	OverTemp.Chest	Set inside temperature (TI Chest) is abnormal.
173	OverTemp.DMD	Set inside temperature (DMD) is abnormal.

6-4. Operation using an HTTP browser

6-4-1. Overview

The use of HTTP server functions will allow control of the projector from a web browser. Please be sure to use " Microsoft Internet Explorer 4.x" or a higher version for the web browser.
This device uses "JavaScript" and "Cookies" and the browser should be set to accept these functions. The setting method will vary depending on the version of the browser. Please refer to the help files and the other information provided in your software.

NOTE

The display's or button's response can be slowed down or operation may not be accepted depending on the settings of your network.
Should this happen, consult your network administrator.
The projector may not respond if its buttons are repeatedly pressed in rapid intervals. Should this happen, wait a moment and repeat. If you still cannot get any response, pull out and then reinsert the LAN card on the projector.
Access is gained to the HTTP server functions by and specifying
http://<the projector's IP address>/index.html
in the entry column of the URL.

6-4-2. Preparation before use

Make network connections and set up the projector and confirm that it is complete before engaging in browser operations.
Operations with a browser that uses a proxy server may not be possible depending on the type of proxy server and the setting method. Although the type of proxy server will be a factor, it is possible that items that have actually been set will not be displayed depending on the effectiveness of the cache, and the contents set from a browser not be reflected in operation. It is recommended that a proxy server not be used unless it is unavoidable.

6-4-3. Handling of the address for operation via a browser

Regarding the actual address that is entered for the address or entered to the URL column when operation of the projector is via a browser, the host name can be used as it is with the host name corresponding to the IP address of the projector has been registered in the domain name server by a network administrator, or the host name corresponding to the IP address of the projector has been set in the "HOSTS" file of the computer being used.

(Example 1) When the host name of the projector has been set to "pj.nec.co.jp"

http://pj.nec.co.jp/index.html is specified for the address or the entry column of the URL to access HTTP server functions.

(Example 2) When the IP address of the projector is "192.168.10.10"

http://192.168.10.10/index.html is specified for the address or the entry column of the URL to access HTTP server functions.

6-4-4. Structure of the HTTP server

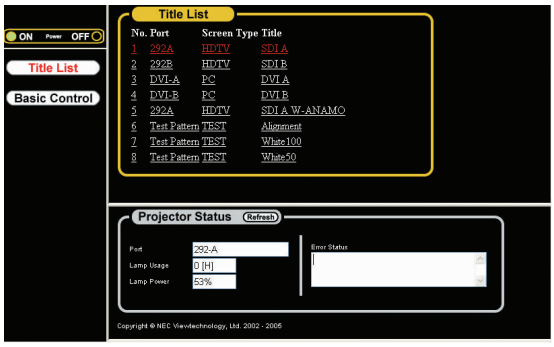

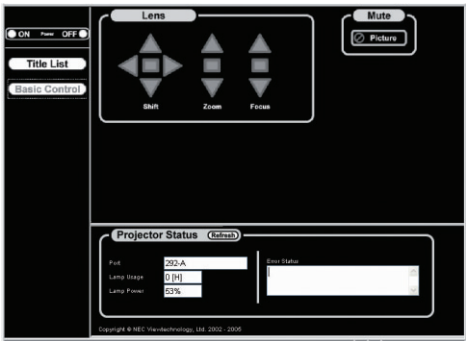

Power		Controls the power to your projector. • On: Turns the power on. • Off: Turns the power off.
Title List		Displays titles set in the projector (such as input port, screen type, and title). Check, and the title will be changed.
Basic Control		Displays the basic control items.
Lens		Controls the lens operation.
	Shift	▲ : Shifts the projected screen upward. ▼ : Shifts the projected screen downward. ◀ : Shifts the projected screen leftward. ▶ : Shifts the projected screen rightward. ■ : Stops the shifting. Shifting can also be stopped by clicking the same button one more time.
	Zoom	▲ : Zooms up the lens. ▼ : Zooms down the lens. ■ : Stops the zooming. Zooming the can also be stopped by clicking the same button one more time.
	Focus	▲ : Focuses up the lens. ▼ : Focuses down the lens. ■ : Stops the focusing. Focusing can also be stopped by clicking the same button one more time.
Mute	Picture	Click and the douser closes and the projected picture disappears. Click once again and the picture will be projected again.
Projector Status		Displays the condition of the projector. • Port: Displays the input port of the selected title. • Lamp Usage: Displays the hours of lamp use. • Lamp Power: Displays lamp output (%). • Error Status: Displays the status of errors occurring within the projector. • Refresh: Updates the display of the following conditions.

6-5. Outline Drawing

6-5-1. Projector head outline drawing

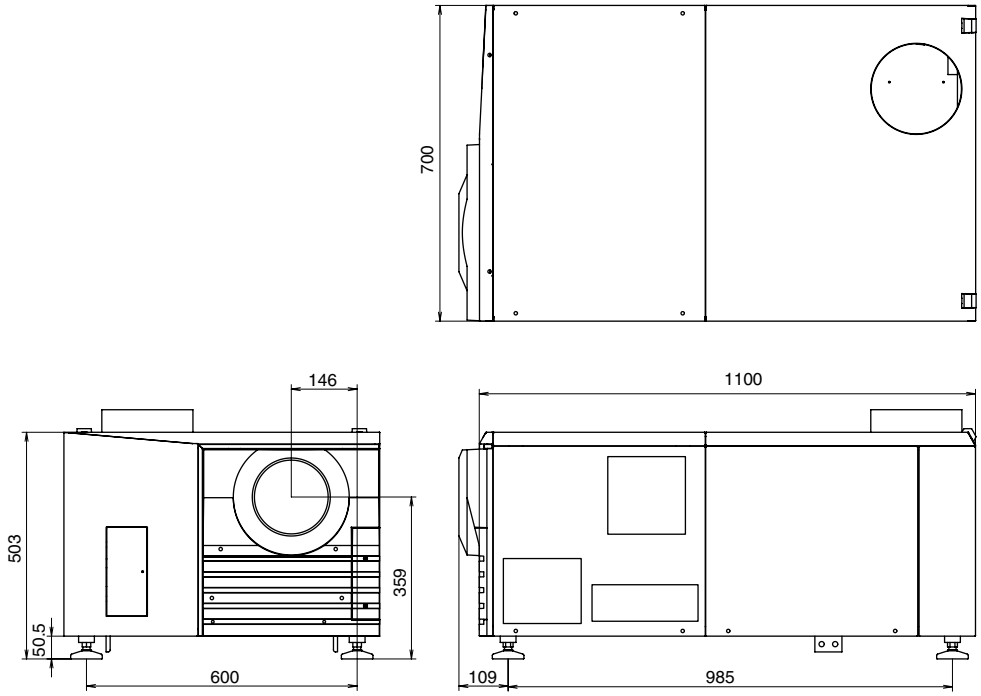

Units: mm

6-5-2. Lamp power supply unit outline drawing

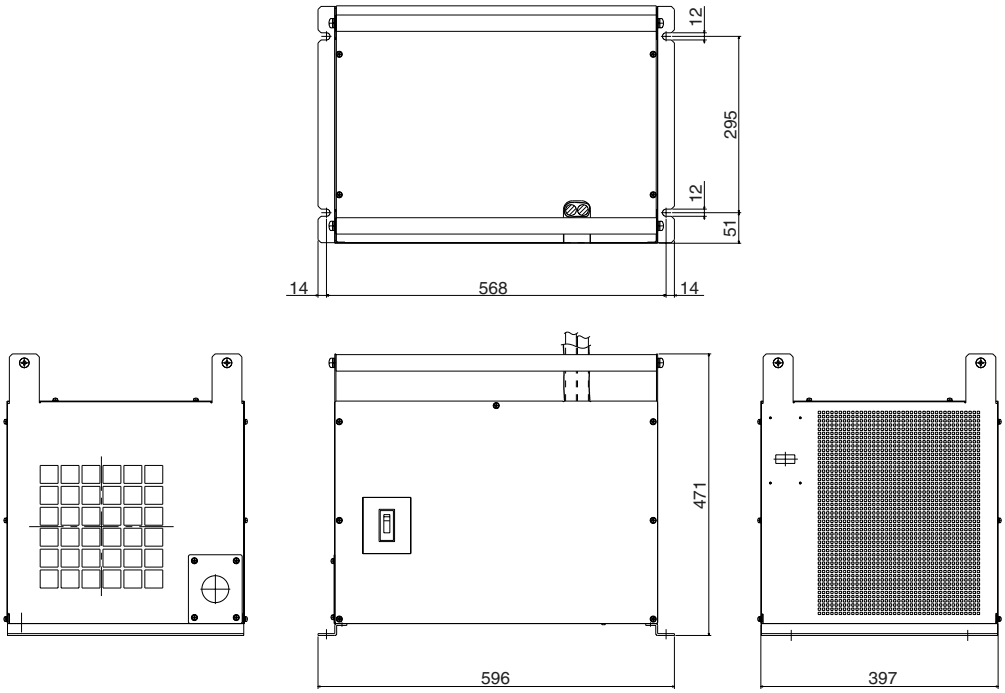

Units: mm

6-6. Specifications

Model No.		NC2500S
Projection method		3 chip DMD reflector method (DLP® method)
Panel resolution		2048 x 1080
Lamp type		4.5 kW to 7 kW xenon lamp (Note)
Screen sizes		15 m to 25 m (Width) (Depends on setup conditions)
Contrast ratio		2000:1 or above
Lens adjustment function		Motorized lens shift (vertical/horizontal), motorized zoom, motorized focus, douser
Signal input terminal		RGB DIGITAL (2) DVI-D 24pin（TMDS specification） SDI (2) BNC（SMPTE 292M）
External Control		RS232C (1) D-sub 9 pin Remote control LAN port (RJ-45) x 2 USB port (type A) GPIO port (D-sub 37 pin) PC card slot (1) PCMCIA type II, card bus Interlock terminal
Power supply voltage	Projector head	AC200 to 240V, 50/60 Hz single phase
	Lamp power supply	AC200-230V, 50/60Hz Three-phase (Star connection) AC380-415V, 50/60Hz Three-phase (Star connection) Switch type
Input current	Projector head	5A
	Lamp power supply	28A (200 to 230V), 16A (380 to 415V)
Power consumption	Projector head	0.95kW
	Lamp power supply	8kW
Cooling method		Cooling fluid system, Cooling air system (includes dust filter)
Noise level		Less than 65 dB
Installation		Orientation:Desktop/front, Desktop/rear
Dimensions	Projector head	700 mm (W) x 1100 mm (D) x 503 mm (H) (Does not include protruding portions Includes foot)
	Lamp power supply	596 mm (W) x 397 mm (D) x 471 mm (H)
Net weight	Projector head	115 kg (Excluding lens)
	Lamp power supply	50.5kg
Environment		Operating temperature: 5 to 35˚C Operating humidity: 10 to 85% (non-condensing) Storage temperature: -10 to 50˚C Storage humidity: 10 to 85% (non-condensing)
Regulations		<Safety> <EMC> USA UL60950-1 FCC Class A Canada CSA60950-1 ICES-003 Class A Europe EN60950-1 EN55022 Class A EN55024 Oceania IEC60950-1 AS/NZS CISPR. 22 Class A Japan J60950 VCCI Class A Asia IEC60950-1 CISPR. 22

(Note) Using any lamp other than NEC's optional lamps will result in lower brightness compared to NEC optional lamps. If brightness is important to you, it is recommended that you use NEC's optional lamps.
NEC will post information on its homepage regarding installable lamps, other than NEC's optional lamps. Note that NEC does not guarantee performance and reliability when lamps other than NEC's optional lamps are installed.

* Note that these specifications and design can change without prior notice.

Caracteristiques techniques

Numéro du modèle		NC2500S
Mode de projection		Réflecteur DMD 3 matrices (DLP® method)
Résolution du panneau		2048 x 1080
Type de lampe		Lampe xenon 4.5kW à 7kW (Remarque)
Tailles d'écran		15m à 25m (Largeur) (Dépend des conditions de configuration)
Rapport de contraste		Plus de 2000 : 1
Fonction de réglage de l'objectif		Commande du mouvement horizontal et vertical de l'objectif à moteur, Commande du zoom et de la mise au point à moteur, obturateur
Borne d'entrée des signaux		RGB NUMERIQUE (2) DVI-D 24fiches (Spécifications TMDS) SDI (2) BNC (SMPTE 292M Niveau C, 4:2:2)
Commande extérieure		D-sub 9 fiches RS232C (1) Télécommande Port Ethernet (2) (RJ-45) Port USB (Type A) Port GPIO (D-sub 37 broches) Slot de carte PC (1) PCMCIA type II, bus de carte Connecteur de sécurité
Alimentation électrique	Tête du projecteur	CA200-240V, 50/60 Hz Monophasé
	Alimentation de la lampe	CA200-230V, 50/60Hz Triphasé (Branchement étoile) CA380-415V, 50/60Hz Triphasé (Branchement étoile) Type de commutateur
Intensité d'entrée	Tête du projecteur	5A
	Alimentation de la lampe	28A (200-230V), 16A (380-415V)
Puissance absorbée	Tête du projecteur	0.95kW
	Alimentation de la lampe	8kW
Mode de refroidissement		Système à liquide de refroidissement, Système de refroidissement par air (comprend un filtre anti-poussière)
Niveau de bruit		Moins de 65dB
Installation		Orientation : Bureau/Avant, Bureau/Arrière
Dimensions	Tête du projecteur	700mm(l) x 1100mm(p) x 503mm(h) (Ne comprend pas les parties saillantes Comprend le pied)
	Alimentation de la lampe	596mm(l) x 397mm(p) x 471mm(h)
Poids net	Tête du projecteur	115 kg(sans objectif)
	Alimentation de la lampe	50.5kg
Environnement		Température de service : 5° à 35°C, Humidité : 10-85% (sans condensation) Température de magasinage: -10° à 50°C Humidité : 10-85% (sans condensation)
Réglementations		<Sécurité> <EMC> USA UL60950-1 FCC Classe A Canada CSA60950-1 ICES-003 Classe A Europe EN60950-1 EN55022 Classe A EN55024 Océanie IEC60950-1 AS/NZS CISPR. 22 Classe A Japon J60950 VCCI Classe A Asie IEC60950-1 CISPR. 22

(Remarque) L'utilisation d'une lampe autre que les lampes optionnelles NEC aura pour conséquence une luminosité inférieure à celle des lampes optionnelles NEC. Si la luminosité est un critère important, nous vous recommandons d'utiliser les lampes optionnelles NEC.
NEC affichera sur sa page Internet les informations concernant les lampes, autres que les lampes optionnelles NEC, pouvant être installées. Veuillez noter que NEC ne garantit pas le bon fonctionnement et la fiabilité lorsque des lampes autres que les lampes optionnelles NEC sont installées.

* Veuillez noter que l'apparence et les caractéristiques peuvent être modifiées sans avertissement préalable.

Technische Daten

Modellnummer		NC2500S
Projektionsverfahren		3 Chip DMD-Reflektorverfahren (DLP®-Verfahren)
Bildflächenauflösung		2048 x 1080
Lampentyp		4.5kW bis 7kW Xenon-Lampe (Hinweis)
Bildschirmgrößen		15m bis 25m (Breite) (Ist abhängig von den Einrichtungsbedingungen)
Kontrastverhältnis		Mehr als 2000 : 1
Linsenbewegung		Servo in Horizontal- und Vertikalrichtung, Motorzoom und -fokus, Douser
Signaleingangsanschluss		RGB DIGITAL (2) DVI-D 24-pol (TMDS-Spezifikation) SDI (2) BNC (SMPTE 292M Level C, 4:2:2)
Externe Steuerung		RS232C (1) D-sub 9-pol Fernbedienung Ethernet Port (2) (RJ-45) USB Port (Typ A) GPIO Port (D-Sub 37-pol.) PC-Kartensteckplatz (1) PCMCIA Typ II, Karten-Bus Verriegelungsanshluss
Spannungsversorgung	Projektor Haupt	200-240V Wechselstrom, 50/60Hz einphasig
	Lampenstromversorgung	200-230V Wechselstrom, 50/60Hz dreiphasig (Star-Anschluss) 380-415V Wechselstrom, 50/60Hz dreiphasig (Star-Anschluss) Netzschaltertyp
Eingangsstrom	Projektor Haupt	5A
	Lampenstromversorgung	28A (200-230V), 16A (380-415V)
Leistungsaufnahme	Projektor Haupt	0.95kW
	Lampenstromversorgung	8kW
Abkühlverfahren		Kühlflüssigkeitssystem, Luftabkühlsystem (einschließlich Staubfilter)
Geräuschpegel		Weniger als 65dB
Installation		Ausrichtung: Desktop/Vorn, Desktop/Hinten
Abmessungen (B/T/H)	Projektor Haupt	700mm(B) x 1100mm(T) x 503mm(H) (Ohne hervorstehende Teile, einschließlich Fuß)
	Lampenstromversorgung	596mm(B) x 397mm(T) x 471mm(H)
Gewicht	Projektor Haupt	115 kg (ohne Linse)
	Lampenstromversorgung	50.5kg
Umgebungsbedingungen		Betriebstemperatur: 5°C bis 35°C Feuchtigkeit: 10-85% ohne Kondensatbildung Lagerungstemperatur: -10°C bis 50°C Feuchtigkeit : 10-85% ohne Kondensatbildung
Verordnungen		<Sicherheit> <EMC>
	USA	UL60950-1 FCC Klasse A
	Kanada	CSA60950-1 ICES-003 Klasse A
	Europa	EN60950-1 EN55022 Klasse A EN55024
	Ozeanien	IEC60950-1 AS/NZS CISPR. 22 Klasse A
	Japan	J60950-1 VCCI Klasse A
	Asien	IEC60950-1 CISPR. 22

(Hinweis) Wenn Sie eine andere Lampe als die optionalen Lampen von NEC verwenden, wird im Vergleich zu den optionalen NEC-Lampen eine geringere Helligkeit erzielt. Wenn die Helligkeit für Sie ein wichtiger Faktor ist, ist es empfehlenswert, die optionalen Lampen von NEC zu verwenden.
NEC stellt Informationen hinsichtlich der installierbaren Lampen anderer Hersteller auf der NEC-Homepage zur Verfügung. Beachten Sie aber, dass NEC keine Garantie für Leistung und Verlässlichkeit geben kann, wenn andere Lampen als die optionalen NEC-Lampen installiert werden.

* Beachten Sie, dass Änderungen der technischen Daten und des Designs jederzeit vorbehalten sind.

6-7. Pin Assignment and Functions of Terminal

6-7-1. PC CONTROL connector (D-Sub 9 pin)

This is an RS-232C interface for controlling the projector head from a PC. The projector operates as a DCE (Data Communication Equipment), so use a straight cable when connecting to a PC.

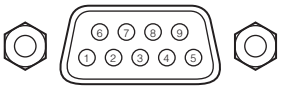

Pin No.	RS-232C Signal Name	Functions as RS-232C	Projector Connector Operation
1	CD	Carrier detection	Not used (N.C.)
2	RXD	Reception data	Data transmission to an external device
3	TXD	Transmission data	Data reception from an external device
4	DTR	Data Terminal ready (Note 1)	Connection to 6 pins
5	GND	Signal GND	Signal GND
6	DSR	Data set ready (Note 1)	Connection to 4 pins
7	RTS	Transmission request	SYSTEM (Note 2): Hi-Z (Not used) CINEMA (Note 2): Hi-Z (Used)
8	CTS	Transmission available	SYSTEM (Note 2): Fixed at -6.5 V (Not used) CINEMA (Note 2): ± 10.5 V (Used: Depends on communication status)
9	RI	Ring indicator	Not used (N.C.)

Note 1: Do not use DTR and DSR signals when communicating.
Note 2: Connector operations vary according to the PC control signal switch (CINEMA/SYSTEM). (When in SYSTEM, do not use RTS and CTS signals.)

Internal Configuration Diagram of RS-232C Communication System

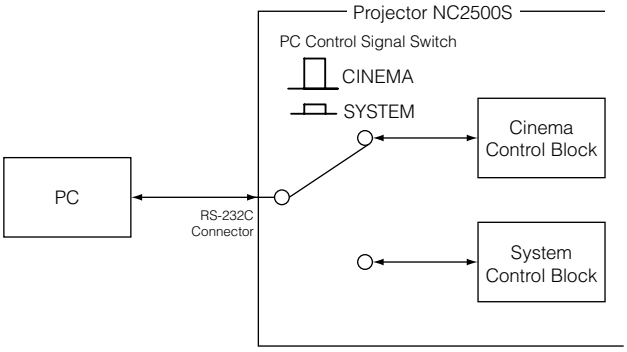

6-7-2. Remote control input connector (REMOTE IN) (Stereo mini)

Connected with the projector's remote control the accessory remote cable.
When the remote cable is connected to this connector, the remote cable connector operates with the following functions.

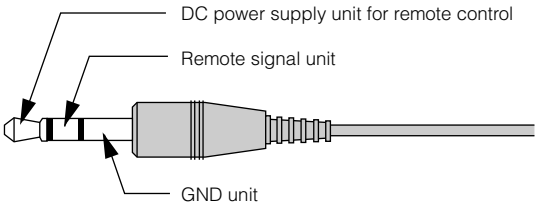

The DC voltage supplied from the projector to the remote control is approximately +4.0 V.

NOTE

The remote control cable is connected first to the remote control, then to the projector head.
The leading end of the remote control cable is the power supply unit, so be careful not to touch the other end of the remote cable to the projector head or other devices while only the remote control cable is connected to the projector.

TIP

Even if the remote cable power supply unit and GND unit (such as the projector head) should short, the protective function inside the projector will activate to prevent the shorted cable from damaging the projector.

6-7-3. LAN port (LAN-A, LAN-B) (RJ-45)

Use Ethernet 10Base-T/100Base-TX UTP (Unshielded Twist Pair cable) to connect with a video server or a PC.
A switching hub exists inside, so there are no functional differences of either the LAN-A or LAN-B ports.

Internal Configuration Diagram of LAN Port

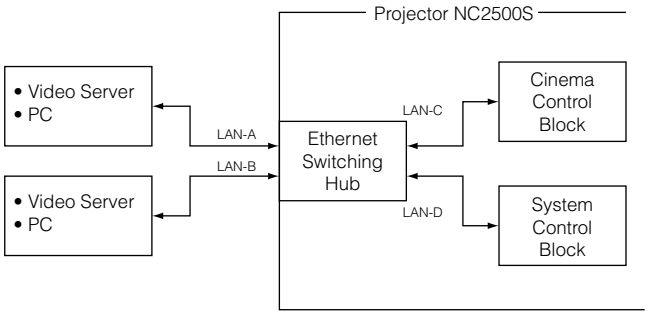

6-7-4. External control connector (GP I/O) (D-Sub 37 pin)

It is possible to control the projector with an external device and to control the external device from the projector using an external control connector (GP I/O: General Purpose I/O Ports). Each pin is electrically separated from the projector internal circuits by a photo-coupler. 8 port input and 8 port output are available.
Please contact your dealer/distributor regarding how to use and to operate them.

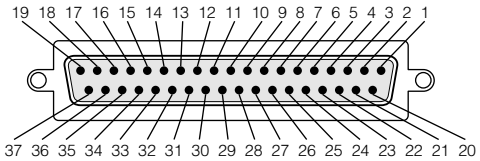

Pin view of female connector

Pin No.	Signal Name	I/O	Pin No.	Signal Name	I/O
1	Ext_GPIN_1_P	Input	20	Ext_GPIN_1_N	Input
2	Ext_GPIN_2_P	Input	21	Ext_GPIN_2_N	Input
3	Ext_GPIN_3_P	Input	22	Ext_GPIN_3_N	Input
4	Ext_GPIN_4_P	Input	23	Ext_GPIN_4_N	Input
5	Ext_GPIN_5_P	Input	24	Ext_GPIN_5_N	Input
6	Ext_GPIN_6_P	Input	25	Ext_GPIN_6_N	Input
7	Ext_GPIN_7_P	Input	26	Ext_GPIN_7_N	Input
8	Ext_GPIN_8_P	Input	27	Ext_GPIN_8_N	Input
9	Ext_GPOUT_1_P	Output	28	Ext_GPOUT_1_N	Output
10	Ext_GPOUT_2_P	Output	29	Ext_GPOUT_2_N	Output
11	Ext_GPOUT_3_P	Output	30	Ext_GPOUT_3_N	Output
12	Ext_GPOUT_4_P	Output	31	Ext_GPOUT_4_N	Output
13	Ext_GPOUT_5_P	Output	32	Ext_GPOUT_5_N	Output
14	Ext_GPOUT_6_P	Output	33	Ext_GPOUT_6_N	Output
15	Ext_GPOUT_7_P	Output	34	Ext_GPOUT_7_N	Output
16	Ext_PROJ_GOOD_P	Output	35	Ext_PROJ_GOOD_N	Output
17	NC	-	36	NC	-
18	Reserve	-	37	Reserve	-
19	Reserve	-	-	-	-

Input Connector

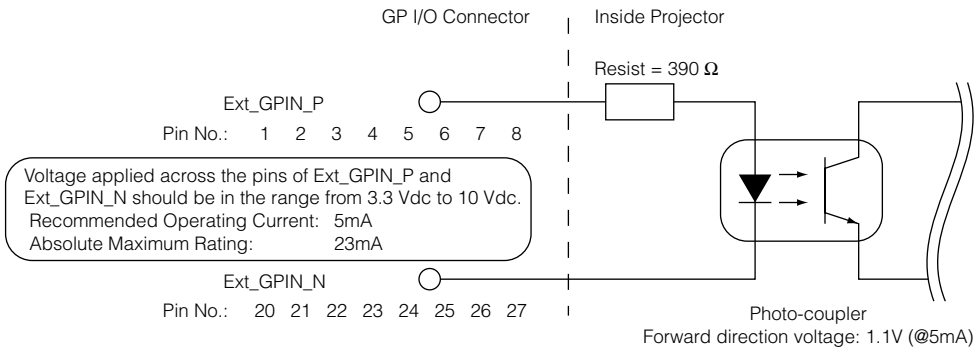

• Use with External Control Mode

You can use the GP I/O input port to turn the projector power on and off, to control video mute and to switch signals (switching the input connector and image adjusting data).

Pin No.	Photo-coupler ON / OFF			Function
1-20	OFF			External control mode OFF
	ON			External control mode ON
2-21	OFF			Power off
	ON			Power on
3-22	OFF			Image mute off
	ON			Image mute on
4-23	6-25	5-24	4-23	The following functions are used, depending on the combination of the input connectors.
5-24	OFF	OFF	OFF	Selects title registered to MACRO 1.
6-25	OFF	OFF	ON	Selects title registered to MACRO 2.
	OFF	ON	OFF	Selects title registered to MACRO 3.
	OFF	ON	ON	Selects title registered to MACRO 4.
	ON	OFF	OFF	Selects title registered to MACRO 5.
	ON	OFF	ON	Selects title registered to MACRO 6.
	ON	ON	OFF	Selects title registered to MACRO 7.
	ON	ON	ON	Selects title registered to MACRO 8.
7-26	-	-	-	Used internally.
8-27	-	-	-	Used internally.

NOTE When in use in the External Control Mode, it is not possible to turn the power on and off from the remote control, operation panel or menus, to mute the video, or to switch titles.

Output Connector

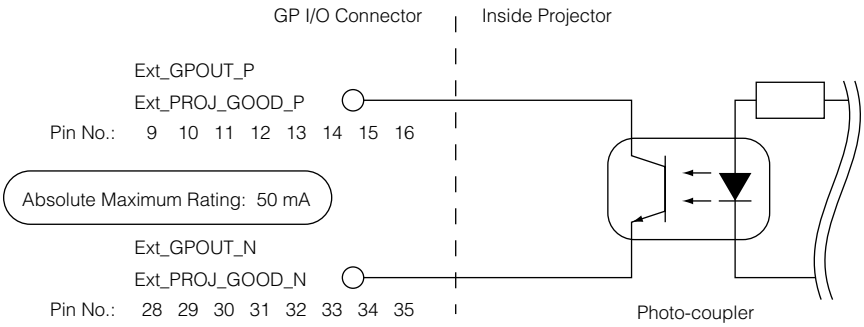

6-7-5. SDI-A, SDI-B (HD-SDI input connector) (BNC)

This is a signal input connector (SMPTE 292/HDSDI) for CINEMA.
The SMPTE 292/HD-SDI transfers HDTV signals with 1.5 GHz digital serial signals, so use a 75 Ω coaxial cable having a thickness and characteristics higher than 5C-FB, and use a BNC for the connector.

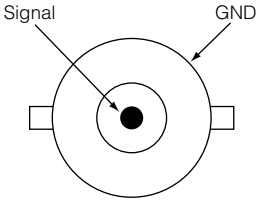

6-7-6. DVI-A, DVI-B (DVI digital Input connector) (DVI-D 24 pin)

This is a single link DVI input connector that is compliant with hot plug detect (HPD). Use a single link cable. Noise may be generated in the video if you use a dual link cable.
EDID is available even when the projector is switched off.

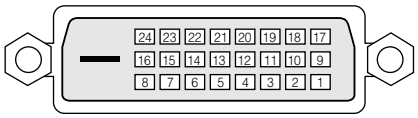

Pin view of female connector

Pin No.	Signal Name	Pin No.	Signal Name
1	TMDS Data 2-	13	unused
2	TMDS Data 2+	14	+5V Power
3	TMDS Data 2 Shield	15	Ground
4	Unused	16	Hot Plug Detect*
5	Unused	17	TMDS Data 0-
6	DDC Clock	18	TMDS Data 0+
7	DDC Data	19	TMDS Data 0 Shield
8	Unused	20	unused
9	TMDS Data 1-	21	unused
10	TMDS Data 1+	22	TMDS Clock Shield
11	TMDS Data 1 Shield	23	TMDS Clock+
12	Unused	24	TMDS Clock-

6-8. Related products list

Product name		Model name
Lens	Zoom Lens 1.45 to 1.8:1	L2K-14ZM
	Zoom Lens 1.8 to 2.4:1	L2K-18ZM
	Zoom Lens 2.2 to 3.0:1	L2K-22ZM
	Zoom Lens 3.0 to 4.3:1	L2K-30ZM
Anamorphic lens	Anamorphic lens 1.25	AL 1.25
Anamorphic lens motorized turret	Anamorphic turret	NC-AT01
Lamp house module (excluding lamp)	Lamp house module	NC-LH01
Lamp	4.5kW lamp	NC-LP4501
	6.0kW lamp	NC-LP6001
Power cord	-	(Note)
NC2500S dedicated base	Pedestal	NC-PD01
Wireless LAN card	Wireless LAN Card NWL-100 Series	(Note)
Touch panel	Touch Panel Controler	(Note)
Holder arm for touch panel	Touch Panel Holder Arm	(Note)
Replacement air filter	Air Filter	NC-AF01
Built-in type multi-media switcher	Built-in type Multi-Media Switcher	MM2000B
Interface board (DVI)	DVI Input Board	MM-DVI
Interface board (SDI)	SDI Input Board	MM-SDI
Interface board (RGB)	Analog RGB Input Board	MM-RGB
Interface board (VIDEO)	VIDEO Input Board	MM-VIDEO

(Note) Please contact your dealer/distributor for details on product and model names .

© NEC Viewtechnology. Ltd. 2005-2006 Printed in Japan
Ver.3 06/06

NC2500S User's Manual

Printed on recycled paper

7N8P6673