myprojectorlamps.com

The most trusted, dependable name in projector lamp sales.

http://www.myprojectorlamps.com

http://www.myprojectorlamps.ca

http://www.myprojectorlamps.eu

The following projector manual has not been modified or altered in any way.

MultiSync MT840E/MT1040E/MT1045E
LCD Projector
User’s Manual

English

IMPORTANT INFORMATION

Precautions

Please read this manual carefully before using your NEC MultiSync MT840/MT1040/MT1045 Projector and keep the manual handy for future reference.
Your serial number is located under the name plate label on the left side of your MultiSync MT840/MT1040/MT1045. Record it here:

CAUTION

To turn off main power, be sure to remove the plug from power outlet.
The power outlet socket should be installed as near to the equipment as possible, and should be easily accessible.

CAUTION

TO PREVENT SHOCK, DO NOT OPEN THE CABINET.
NO USER-SERVICEABLE PARTS INSIDE. REFER SERVICING TO QUALIFIED NEC SERVICE PERSONNEL.

This symbol warns the user that uninsulated voltage within the unit may be sufficient to cause electrical shock. Therefore, it is dangerous to make any kind of contact with any part inside of the unit.

This symbol alerts the user that important information concerning the operation and maintenance of this unit has been provided. The information should be read carefully to avoid problems.

WARNING

TO PREVENT FIRE OR SHOCK, DO NOT EXPOSE THIS UNIT TO RAIN OR MOISTURE.
DO NOT USE THIS UNIT'S GROUNDED PLUG WITH AN EXTENSION CORD OR IN AN OUTLET UNLESS ALL THREE PRONGS CAN BE FULLY INSERTED.
DO NOT OPEN THE CABINET. THERE ARE HIGH-VOLTAGE COMPONENTS INSIDE. ALL SERVICING MUST BE DONE BY QUALIFIED NEC SERVICE PERSONNEL.

DOC Compliance Notice

This Class A digital apparatus meets all requirements of the Canadian Interference-Causing Equipment Regulations.

3. GSGV Acoustic Noise Information Ordinance:

The sound pressure level is less than 70 dB (A) according to ISO 3744 or ISO 7779.

CAUTION

LASER RADIATION-
DO NOT STARE INTO BEAM

WAVE LENGTH: 650 nm (640-660 nm)
MAX. OUTPUT: 1 mW
CLASS II LASER PRODUCT

RF Interference

WARNING

The Federal Communications Commission does not allow any modifications or changes to the unit EXCEPT those specified by NEC Technologies in this manual. Failure to comply with this government regulation could void your right to operate this equipment.
This equipment has been tested and found to comply with the limits for a Class A digital device, pursuant to Part 15 of the FCC Rules.
These limits are designed to provide reasonable protection against harmful interference in a commercial installation. This equipment generates, uses and can radiate radio frequency energy and, if not installed and used in accordance with the instructions, may cause harmful interference to radio communications. Operation of this equipment in a residential area is likely to cause harmful interference in which case the user will be required to correct the interference at their own expense.

In UK, a BS approval power cable with moulded plug has a Black (five Amps) fuse installed for use with this equipment. If a power cable is not supplied with this equipment please contact your supplier.

Important Safeguards

These safety instructions are to ensure the long life of your projector and to prevent fire and shock. Please read them carefully and heed all warnings.

Installation

1. For best results, use your projector in a darkened room.
2. Place the projector on a flat, level surface in a dry area away from dust and moisture.
3. Do not place your projector in direct sunlight, near heaters or heat radiating appliances.
4. Exposure to direct sunlight, smoke or steam can harm internal components.
5. Handle your projector carefully. Dropping or jarring can damage internal components.
6. Do not place heavy objects on top of the projector.
7. If you wish to have the projector installed on the ceiling:
   a. **Do not attempt to install the projector yourself.**
   b. The projector must be installed by qualified technicians in order to ensure proper operation and reduce the risk of bodily injury.
   c. In addition, the ceiling must be strong enough to support the projector and the installation must be in accordance with any local building codes.
   d. Please consult your dealer for more information.

Power Supply

1. The projector is designed to operate on a power supply of 100-120 or 200-240 V 50/60 Hz AC. Ensure that your power supply fits this requirement before attempting to use your projector.
2. Handle the power cable carefully and avoid excessive bending. A damaged cord can cause electric shock or fire.
3. If the projector is not to be used for an extended period of time, disconnect the plug from the power outlet.

Cleaning

1. Unplug the projector before cleaning.
2. Clean the cabinet periodically with a damp cloth. If heavily soiled, use a mild detergent. Never use strong detergents or solvents such as alcohol or thinner.
3. Use a blower or lens paper to clean the lens, and be careful not to scratch or mar the lens.

CAUTION

Do not unplug the power cable from the wall outlet under any one of the following circumstances. Doing so can cause damage to the projector:

* While the Hour Glass icon appears.
* While the message "Please wait a little." appears. This message will be displayed after the projector is turned off.
* Immediately after the power cable is plugged into the wall outlet (the POWER indicator has not changed to a steady amber glow).
* Immediately after the cooling fan stops working (The cooling fan continues to work for ONE minute after the projector is turned off with the POWER OFF button).
* While the POWER and the STATUS indicators are alternately flashing.

Downloaded from Projector.com

Lamp Replacement

- To replace the lamp, follow all instructions provided on page E-33.
- Be sure to replace the lamp when the Status light comes on. If you continue to use the lamp after 2000 hours (1500 hours : MT1045) of use, the lamp bulb may shatter, and pieces of glass may be scattered in the lamp case. Do not touch them as the pieces of glass may cause injury. If this happens, contact your NEC dealer for lamp replacement.
- Allow a minimum of ONE minute to elapse after turning off the projector. Then disconnect the power cable and allow 60 minutes to cool the projector before replacing the lamp.

Fire and Shock Precautions

1. Ensure that there is sufficient ventilation and that vents are unobstructed to prevent the build-up of heat inside your projector. Allow at least 3 inches (10cm) of space between your projector and a wall.
2. Prevent foreign objects such as paper clips and bits of paper from falling into your projector. Do not attempt to retrieve any objects that might fall into your projector. Do not insert any metal objects such as a wire or screwdriver into your projector. If something should fall into your projector, disconnect it immediately and have the object removed by a qualified NEC service personnel.
3. Do not place any liquids on top of your projector.

- Do not look into the lens while the projector is on. Serious damage to your eyes could result.
- Keep any items such as magnifying glass out of the light path of the projector. The light being projected from the lens is extensive, therefore any kind of abnormal objects that can redirect light coming out of the lens, can cause unpredictable outcome such as fire or injury to the eyes.
- Do not cover the lens with the supplied lens cap or equivalent while the projector is on. Doing so can lead to melting of the cap and possibly burning your hands due to the heat emitted from the light output.
- Do not look into the laser pointer while it is on and do not point the laser beam at another person. Serious injury could result.

Downloaded from Projector.com

TABLE OF CONTENTS

1. INTRODUCTION

Introduction to the MultiSync MT840/MT1040/MT1045 Projector ... E-6
Getting Started ... E-6
Getting to Know Your MultiSync MT840/MT1040/MT1045 Projector ... E-7
Front Features ... E-7
Rear Features ... E-7
Top Features ... E-8
Terminal Panel Features ... E-9
Remote Control Features ... E-10

2. INSTALLATION

Setting Up Your Projector ... E-12
Selecting a Location ... E-12
Using a Tabletop or Cart ... E-12
Distance Chart ... E-13
Ceiling Installation ... E-14
Reflecting the Image ... E-14
Wiring Diagram ... E-15

3. OPERATION

General Controls ... E-17
Using the Menus ... E-17
Using a USB Mouse ... E-17
Menu Tree ... E-18
Menu Elements ... E-19
Menu Descriptions & Functions ... E-20
Source Select ... E-20
RGB ... E-20
Video/S-Video ... E-20
PC Card Viewer ... E-20
Adjustments ... E-20
Picture ... E-20
Volume ... E-20
Image ... E-20
Auto Adjust ... E-21
Position ... E-21
Pixel Adjust ... E-21
Resolution ... E-21
Color Temperature ... E-21
Keystone ... E-21
Factory Default ... E-21
Image Options ... E-21
Image Mode ... E-21
Aspect Ratio ... E-21
Video Mode ... E-22
Gamma ... E-22
Noise Reduction ... E-22
Color Matrix ... E-22

Projector Options ... E-22
Menu ... E-22
Language ... E-22
Projector Pointer ... E-22
Source Display ... E-22
Setup ... E-23
Orientation ... E-23
Background ... E-23
Signal Select ... E-23
Auto Start ... E-23
Power Management ... E-23
Power Off Confirmation ... E-23
Mouse Settings ... E-23
Keystone Save ... E-23
Fan High Speed Mode ... E-23
Clear Lamp Hour Meter ... E-23
Remote Sensor ... E-24
S-Video Mode Select ... E-24
PC Card Viewer Options ... E-24
Capture Options ... E-24

Tools ... E-24
Capture ... E-24
PC Card Files ... E-25
ChalkBoard ... E-25

Help ... E-25
Contents ... E-25
Source Information ... E-25
Projector Information ... E-25

Using the PC Card Viewer Function ... E-26
Features ... E-26
Inserting and Ejecting a PC Card ... E-26
Installing the PC Card Viewer Software ... E-27
Starting Up the PC Card Viewer Software on your PC (PC Card Viewer Utility 1.0) ... E-27
Operating the PC Card Viewer Function from the Projector (playback) ... E-28
Capturing Images Displayed on the Projector ... E-30
Viewing Digital Images ... E-31
Uninstalling the PC Card Viewer Software ... E-31
Terminology ... E-32

4. MAINTENANCE

Replacing the Lamp ... E-33
Remote Control Battery Installation ... E-34
Cleaning or Replacing the Filters ... E-34

5. TROUBLESHOOTING

Status Light Messages ... E-35
Common Problems & Solutions ... E-35

6. SPECIFICATIONS

Optical/Electrical/Mechanical ... E-37
Cabinet Dimensions ... E-38
D-Sub Pin Assignments ... E-40
Timing Chart ... E-41
PC Control Codes ... E-42
Cable Connection ... E-42

Downloaded From Projector.com

1. INTRODUCTION

Introduction to the MultiSync MT840/MT1040/MT1045 Projector

This section introduces you to your new MultiSync MT840 (SVGA)/ MT1040 and MT1045 (XGA) Projector describes the features and controls.

Congratulations on Your Purchase of The MultiSync MT840/ MT1040/MT1045 Projector

The MultiSync MT840/MT1040/MT1045 is one of the very best projectors available today. The MultiSync MT840/MT1040/MT1045 enables you to project precise images up to 300 inches across (measured diagonally) from your PC or Macintosh computer (desktop or notebook), VCR, DVD player, document camera, or even a laser disc player.

You can use the projector on a tabletop or cart, you can use the projector to project images from behind the screen, and the projector can be permanently mounted on a ceiling*[1]. The remote control can be used wirelessly.

Features you'll enjoy:

- Simple set up and operation.
- Hot air blown from the vents does not bother the audience during your presentation since the vents are located on the front.
- A high-performance 180 watt NSH (200W NSH : MT1045) lamp.
- The supplied wireless remote control that operates the projector from any angle.
- The manual zoom control enables you to adjust the image to be between 30 (0.76m) and 300 inches (7.6m) (measured diagonally).
- Keystone correction allows you to correct trapezoidal distortion so that the image is square.
- You can choose between video modes depending on your source: "normal" for a typical picture, "natural" for true color reproduction.
- The built-in PC Card Viewer allows you to start your presentation even when a PC is not available at the site.
- The "Capture" enables you to use the entire picture as a background image or to create slides.
- An image can be projected from in front or behind a screen, and the projector can even be installed on the ceiling.
- NEC Technologies' exclusive Advanced AccuBlend intelligent pixel blending technology - an extremely accurate image compression technology - offers a crisp image with SXGA (1280 x 1024) resolution*[3] . You can select any point on the screen with the pointer and enlarge the selected area.
- Supports most IBM VGA, SVGA, XGA*[2] , SXGA(with Advanced AccuBlend)*[3], Macintosh, component signal (YCbCr / YPbPr) or any other RGB signals within a horizontal frequency range of 15 to 85 kHz and a vertical frequency range of 50 to 85 Hz. This includes NTSC, PAL, PAL60, SECAM and NTSC4.43 standard video signals.

NOTE: *Composite video standards are as follows:*
NTSC: U.S. TV standard for video in U.S. and Canada.
PAL: TV standard used in Western Europe.
PAL60: TV standard used for NTSC playback on PAL TVs.
SECAM: TV standard used in France and Eastern Europe.
NTSC4.43: TV standard used in Middle East countries.

- The supplied remote control can be used without a cable, and you can even use the remote control and mouse adapter to operate your PC or Macintosh mouse wirelessly from across the room with the built-in remote mouse receiver.
- You can control the projector with a PC using the PC Control port.
- The contemporary cabinet design is light, compact, easy to carry, and complements any office, boardroom or auditorium.
- Eight kinds of pointers are available for your presentation.
- USB terminal allows USB mouse operation*[4].

*1 **Do not attempt to mount the projector on a ceiling yourself.** The projector must be installed by qualified technicians in order to ensure proper operation and reduce the risk of bodily injury. In addition, the ceiling must be strong enough to support the projector and the installation must be in accordance with any local building codes. Please consult your dealer for more information.

*2 An XGA image (1024×768) is converted into an 800×600 crisp image with NEC technology's Advanced AccuBlend on MT840.

*3 An SXGA image (1280×1024) is converted into a 1024×768 crisp image with NEC technology's Advanced AccuBlend on MT1040/MT1045.

*4 The USB terminal meets the USB1.0 specification and accepts a USB mouse only.

Getting Started

The fastest way to get started is to take your time and do everything right the first time. Take a few minutes now to click through the CD-ROM and review the user's manual. This may save you time later on. At the beginning of each section of the manual you'll find an overview. If the section doesn't apply, you can skip it.

Downloaded from Projector.com

Getting to Know Your MultiSync MT840/MT1040/MT1045 Projector

Front Features

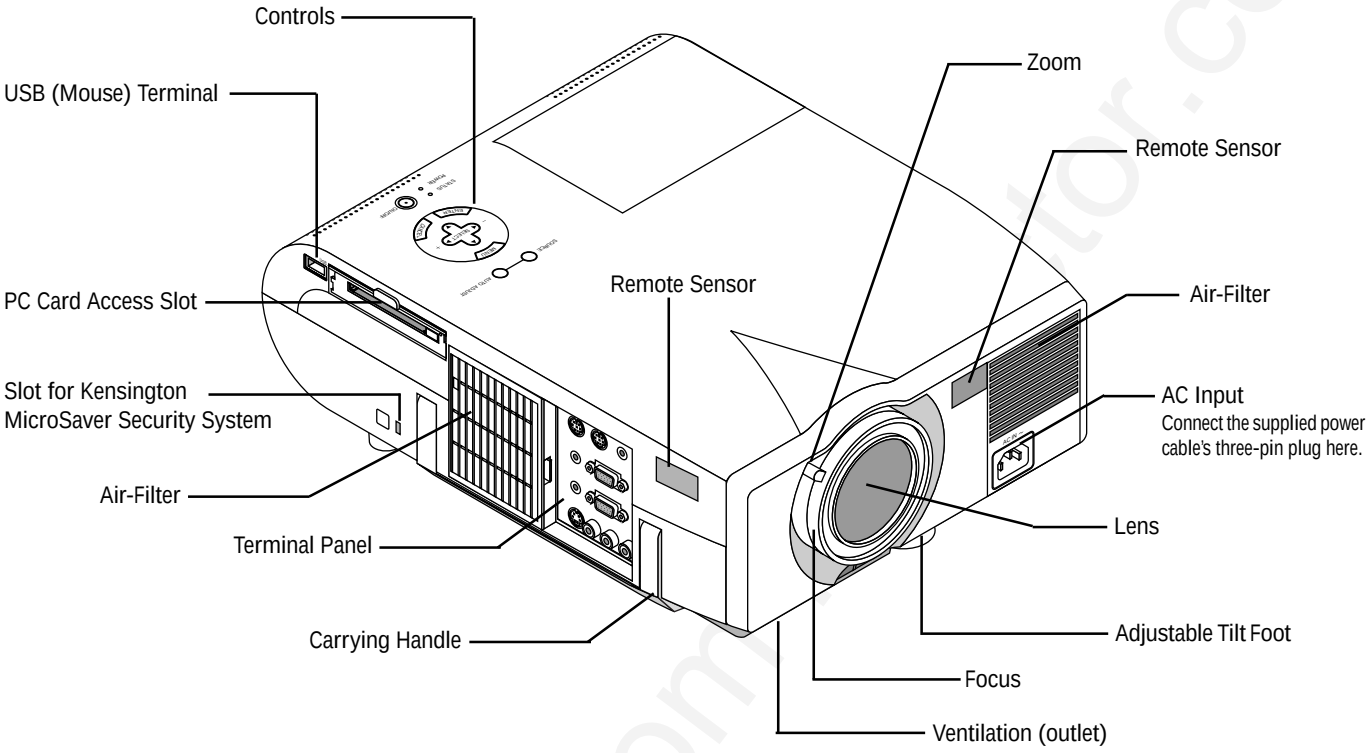

Rear Features

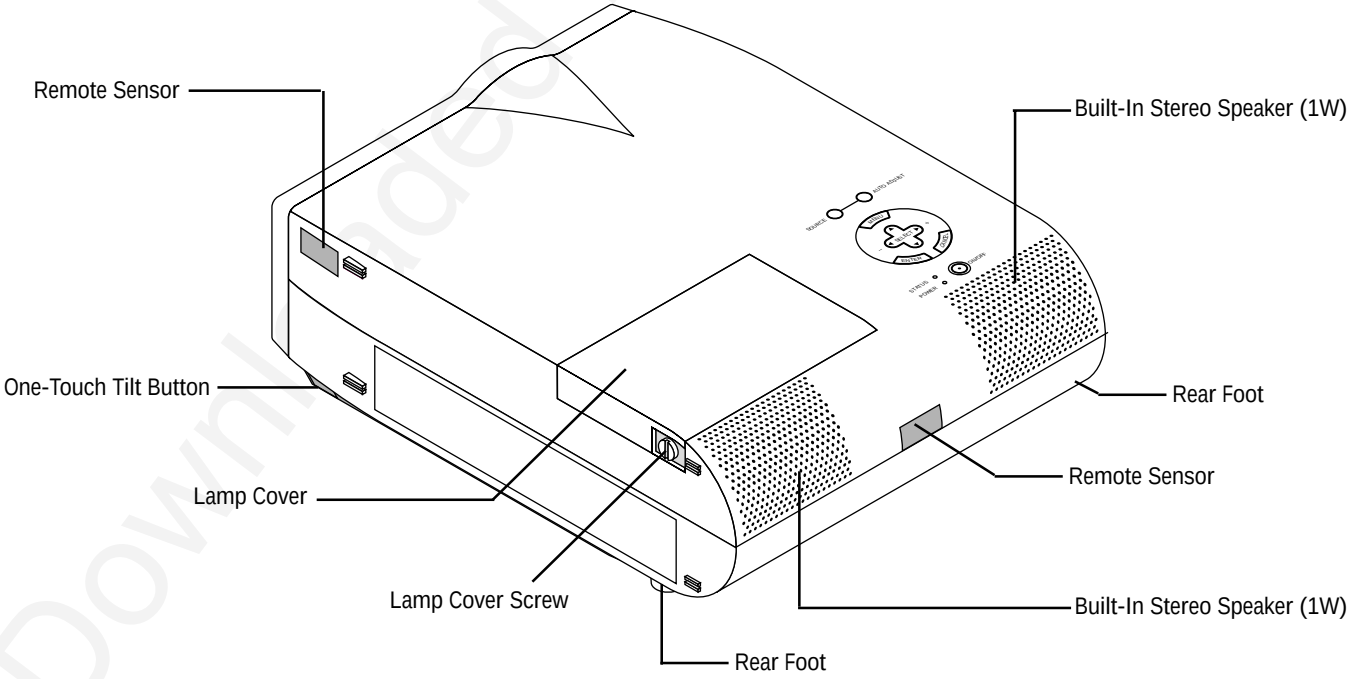

Downloaded from Projector.com

Top Features

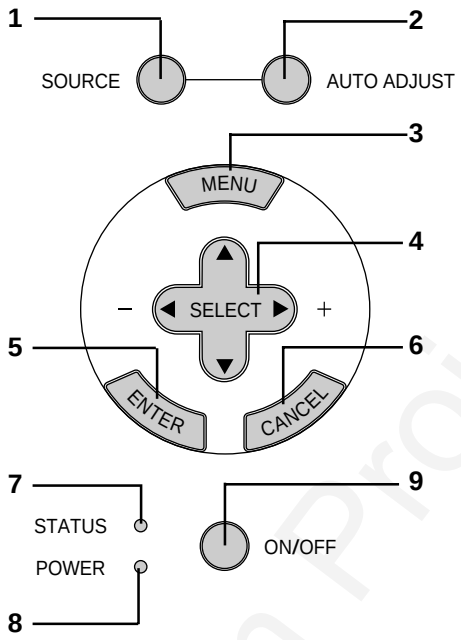

1 Source Button
Use this button to select a video source such as a PC, VCR, DVD player or PC Card Viewer (PC card installed).

2 Auto Adjust Button
Use this button to adjust Position-H/V and Pixel Clock/Phase for an optimal picture. Some signals may not be displayed correctly or take time to switch to another.

3 Menu Button
Displays the main menu for operation.

4 Select (▲▼◀▶) / (+) (–) Buttons
▲▼: Use these buttons to select the menu of the item you wish to adjust.
◀▶: Use these buttons to change the level of a selected menu item.
A press of the ▶ button executes the selection. When no menus appear, these ▲▼ buttons work as a volume control.
When the pointer is displayed, these ◀▶ ▲▼ buttons move the pointer.

5 Enter Button
Executes your menu selection and activates items selected from the menu.

6 Cancel Button
Press this button to exit "Menus". Press this button to return the adjustments to the last condition while you are in the adjustment or setting menu.

7 Status Indicator
When this is lit red continually, it's warning you that the projection lamp has exceeded 2000 hours (1500 hours : MT1045) of service. After this light appears, it is advisable to replace the projection lamp as soon as possible. (See page E-33)
In addition the message "LAMP USAGE XX HOURS" appears continually when the on-screen menu is not displayed. If this light blinks red rapidly, it indicates that the lamp cover or filter cover is not attached properly or the projector is overheated. See the Status Light Messages on page E-35 for more details.

8 Power Indicator
When this indicator is green, the projector is on; when the indicator is amber, it is in standby mode.

9 Power Button
Use this button to turn the power on and off when the power is supplied and the projector is in standby mode.

NOTE: *To turn off the projector, press and hold this button for minimum of two seconds.*

Downloaded from Projector.com

Terminal Panel Features

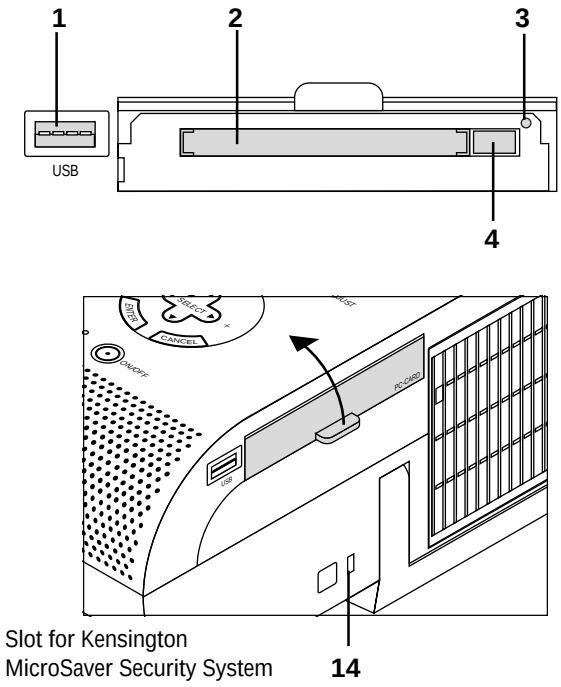

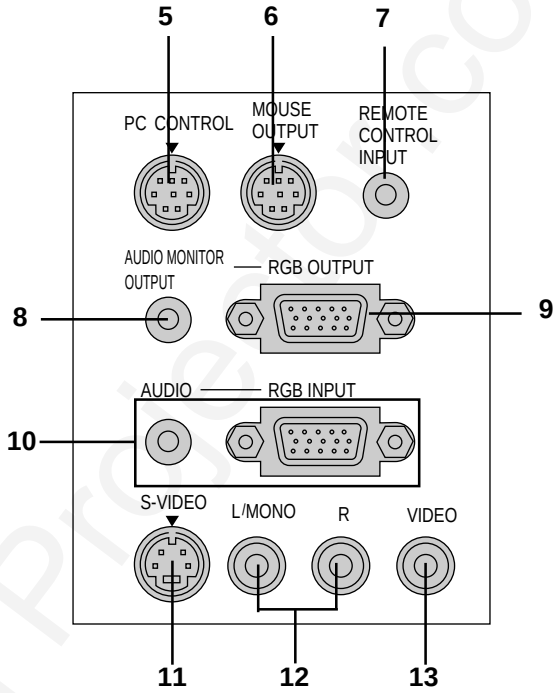

1 USB (Mouse) Terminal
Connect a commercially available mouse that supports USB.
You can operate the menu or Viewer with the USB mouse via this terminal.
Note that this terminal is not used with a computer and that there may be some brands of USB mouse.

2 PC Card Access Slot
Insert a PC card here.

3 PC Card Access Indicator
Lights while accessing a PC card.

4 Eject Button
Press to eject a PC memory card.

5 PC Control Port (Mini DIN 8 Pin)
Use this port to connect your PC to control your projector.
A cap is put on the port at the factory. Remove the cap when using the port.

6 Mouse Output Port (Mini DIN 8 Pin)
Use this port to operate your computer's mouse functions from the remote control.

7 Remote Control Input Jack
Connect your remote control cable here for wired operation.

8 Audio Monitor Output Mini Jack
Connect additional external speakers here to listen to audio coming from your computer, Video or S- Video input.

9 RGB Monitor Output Connector (Mini D-Sub 15 pin)
You can use this connector to loop your computer image to an external monitor from the RGB input source.

10 RGB Audio Input Connector
This is where you connect RGB audio output from a computer or another RGB source.

RGB Input Connector(Mini D-Sub 15 pin)
Connect your PC or other RGB equipment. Use the signal cable that's supplied to connect to a PC.

11 S-Video Input Port
Here is where you connect the S-Video input from an external source like a VCR.

12 Left Channel/Mono Audio Input Jack (RCA)
This is the left channel audio input for stereo sound coming from video equipment or audio system. This also serves as your monaural audio input. (Video and S-video only)

Right Channel Audio Input Jack (RCA)
This is the right channel audio input for stereo sound. (Video and S-video only)

NOTE: *When using two Video sources simultaneously, the Left Channel Audio Input jack is available for the S-Video source only and the Right Channel Audio Input jack is available for the composite video source only.*

13 Video Input
Connect a VCR, DVD player, laser disc player, or document camera here to project video.

14 Built-in Security Slot (🔒)
This security slot supports the MicroSaver® Security System.
MicroSaver® is a registered trademark of Kensington Microware Inc. The logo is trademarked and owned by Kensington Microware Inc.

Downloaded from Projector.com

Remote Control Features

NOTE: If you are using a Macintosh computer, you can click either the right or left button to activate the mouse.

1 Source Button
Press to select a video source.

2 Auto Adjust Button
Use this button to adjust Position-H/V and Pixel Clock/Phase for an optimal picture. Some signals may not be displayed correctly, or in some cases it may take some time for a source to be switched to another.

3 Menu Button
Displays the main menu for operation.

4 Mouse (▲▼◀▶) / (+) (–) Buttons
▲▼: Use these buttons to select the menu of the item you wish to adjust.
◀▶: Use these buttons to change the level of a selected menu item.
A press of the ▶ button executes the selection. When no menus appear, these ▲▼ buttons work as a volume control. For the Mouse button to work as the volume control for your computer, you must be in the Projector mode, which is indicated by lighting the Computer/Projector Select button.
When the pointer is displayed, these ◀▶ ▲▼ buttons move the pointer.

NOTE: Works as a mouse for your projected computer image. This pad is also used to adjust position. This pad selects the submenu you want to adjust. After you make your on-screen menu selection, use this pad to adjust the level up or down.

5 Cancel/ Right Click Button
Press this button to exit "Menus". Press this button to return the adjustments to the last condition while you are in the adjustment or setting menu.

6 Left Click / Enter Button
Use this button to enter your menu selection. It works the same as the "Enter" button on the cabinet.

7 Magnify Button
Use the (+) or (–) button to adjust the image size up to 400%. When the Pointer is displayed, the magnified image is displayed at the center of the Pointer. When the Pointer is not displayed, the magnified image is displayed at the center of the screen.
When the image is magnified, the pointer is changed to the magnifying icon.

8 Pointer Button
Press this button to display one of the eight pointers; press again to hide the pointer. You can move your pointer icon to the area you want on the screen using the Mouse button.

Remote Control

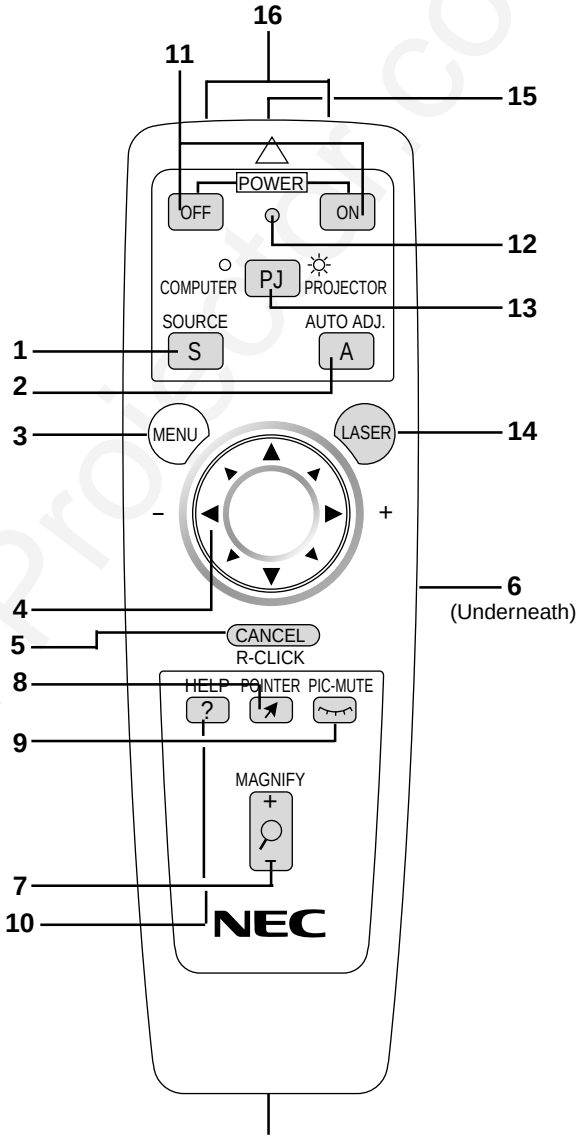

Remote Jack
Connect your remote control cable here for wired operation.

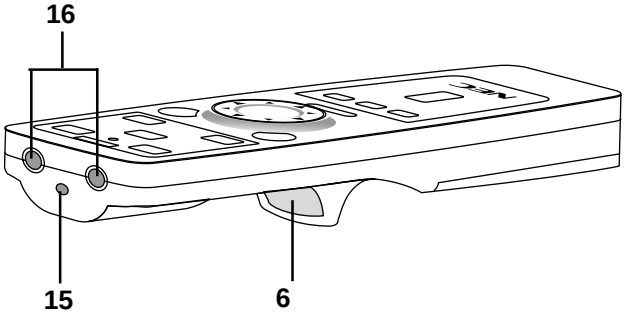

Downloaded from Projector.com

9 Picture Mute Button

This button turns off the image and sound for a short period of time. Press again to restore the image and sound.

10 Help Button

Provides information about operation and adjustment procedures or the set information for the current menu or adjustment during menu operation. This also displays information how to use the Help.

11 Power On And Off

If power is applied, you can use this button to turn your projector on and off.

NOTE: *To turn off the projector, press and hold the POWER OFF button for a minimum of two seconds.*

12 LED

Flashes when any button is pressed.

13 Computer/Projector Select

Use this button to switch between "Computer" and "Projector". When "Computer" is selected, the remote control works as your computer mouse. In this mode only Mouse pad, Laser, R-Click and L-Click buttons are available. This button lights to indicates that you are in the Projector mode.

14 Laser Button

Press and hold this button to activate the laser pointer. When lit, you can use the laser to draw your audience's attention to a red dot that you can place on any object within 30 feet (10 m).

15 Laser Pointer

Beams a laser light when "Laser" button is pressed.

16 Infrared Transmitter

Direct the remote control toward the remote sensor on the projector cabinet.

NOTE: *When either the Menu, Help or Pointer button is pressed, the Computer/Projector Select button lights in red to indicate that your projector is in the Projector mode. If no buttons are pressed within 10 seconds, the light goes out and the Projector mode is canceled.*

Remote Control Precautions

- Handle the remote control carefully.
- If the remote control gets wet, wipe it dry immediately.
- Avoid excessive heat and humidity.
- If you will not be using the remote control for a long time, remove the battery.
- Do not place the batteries upside down.
- Do not look into the laser pointer while it is on.
- Do not point the laser beam at a person.

Operating Range

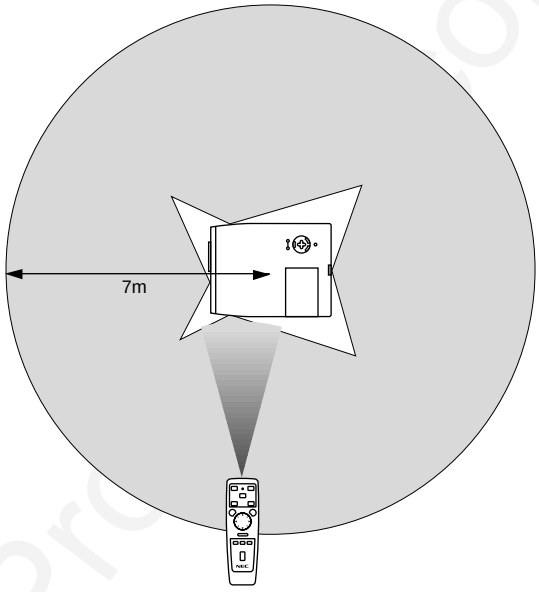

Downloaded from Pro...com

2. INSTALLATION

This section describes how to set up your MultiSync MT840/MT1040/MT1045 projector and how to connect video and audio sources.

Setting up Your Projector

Your MultiSync MT840/MT1040/MT1045 Projector is simple to set up and use. But before you get started, you must first:

1. Determine the image size.
2. Set up a screen or select a non-glossy white wall onto which you can project your image.

Carrying the Projector: Always carry your projector by the handle. Ensure that the power cable and any other cables connecting to video sources are disconnected before moving the projector.

When moving the projector or when it is not in use, cover the lens with the lens cap.

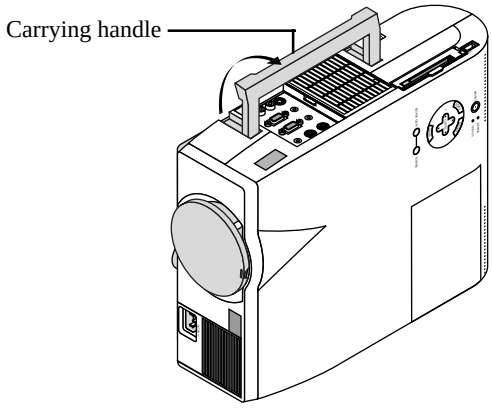

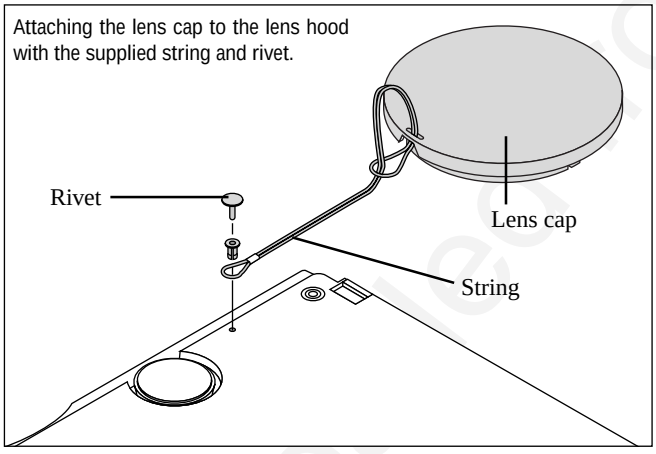

Selecting a Location

The further your projector is from the screen or wall, the larger the image. The minimum size the image can be is approximately 30" (0.76 m) measured diagonally when the projector is roughly 4 feet (1.3 m) from the wall or screen. The largest the image can be is 300" (7.6 m) when the projector is about 36.8 feet (11.2 m) from the wall or screen.

Using a Tabletop or Cart

1. Place your projector on a flat level surface at the optimal distance from the screen or wall so you realize the size image you want. (Avoid having bright room lighting or sun light directly on the screen or wall where you'll be projecting the image.)
2. Connect the power cable, remove the lens cap and turn the projector on. (If no input signal is available, the projector will display a background image.)
3. Ensure that the projector is square to the screen.

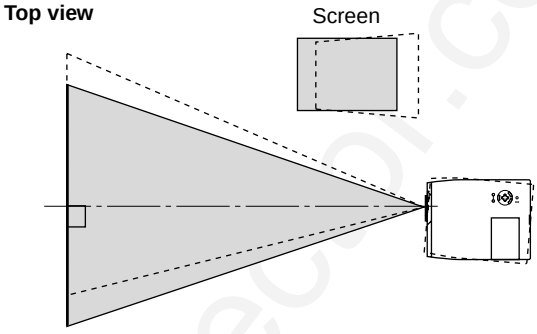

4. Move the projector left or right to center the image horizontally on the screen.
5. To center the image vertically, lift the front edge of the projector and press the One-Touch Tilt button on the front-left side of the projector to release the Front Adjustable foot.

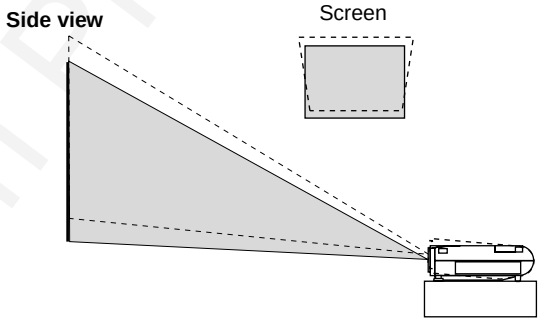

(There is approximately 5 degrees of up and down adjustment for the front of the projector.)

Adjusting the Tilt Foot

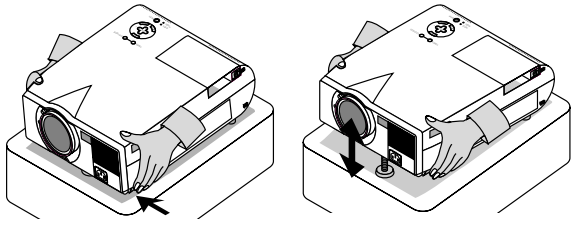

Press and hold the Tilt button on the left side of the projector.

Lift the front edge of the projector to the height you want, and release the button to lock the Adjustable Tilt Foot.

To fine-tune the image's position vertically on the screen, rotate the foot. Each of the rear feet height can be changed up to 0.6" (4mm).

6. If the projected image does not appear square to the screen then use keystone correction for proper adjustment.
7. Adjust the size of the image using the Zoom ring on the lens.

Downloaded from Projector.com

Distance Chart

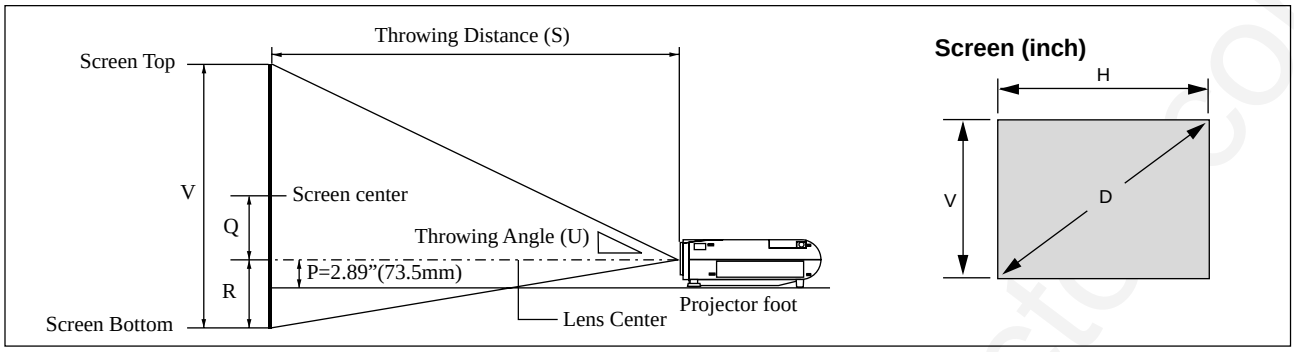

MT840

Screen Size D	Diagonal	(inch)	30	40	60	80	100	120	150	180	200	240	300
	Width(H)	(inch)	24	32	48	64	80	96	120	144	160	192	240
	Width(V)	(inch)	18	24	36	48	60	72	90	108	120	144	180
Magnification K			23.1	30.8	46.2	61.5	76.9	92.3	115.4	138.5	153.9	184.6	230.8
Throwing Distance S	Wide	(inch)	42.2	57.0	86.5	116.1	145.6	175.2	219.6	263.9	293.5	352.6	441.3
		(mm)	1071.1	1446.5	2197.5	2948.4	3699.4	4450.4	5576.8	6703.2	7454.2	8956.1	11208.9
	Tele	(inch)	51.0	68.8	104.3	139.7	175.2	210.7	263.9	317.1	352.6	423.6	530.0
		(mm)	1296.3	1746.9	2648.0	3549.2	4450.3	5351.4	6703.1	8054.8	8956.0	10758.2	13461.6
Throwing Angle U	Wide	(degree)	10.4	10.2	10.1	10.1	10.0	10.0	10.0	10.0	10.0	9.9	9.9
	Tele	(degree)	8.6	8.5	8.4	8.4	8.4	8.3	8.3	8.3	8.3	8.3	8.3
V		(inch)	18.0	24	36	48	60	72	90	108	120	144	180
		(mm)	457.2	609.6	914.4	1219.2	1524	1828.8	2286	2743.2	3048	3657.6	4572
Q		(inch)	7.7	10.3	15.4	20.6	25.7	30.9	38.6	46.3	51.5	61.8	77.2
		(mm)	196.2	261.6	392.3	523.1	653.9	784.7	980.8	1177.0	1307.8	1569.3	1961.7
R		(inch)	1.3	1.7	2.6	3.4	4.3	5.1	6.4	7.7	8.5	10.2	12.8
		(mm)	32.4	43.2	64.9	86.5	108.1	129.7	162.2	194.6	216.2	259.5	324.3
P		(inch)	2.9	2.9	2.9	2.9	2.9	2.9	2.9	2.9	2.9	2.9	2.9
		(mm)	73.5	73.5	73.5	73.5	73.5	73.5	73.5	73.5	73.5	73.5	73.5
Q+P		(inch)	10.6	13.2	18.3	23.5	28.6	33.8	41.5	49.2	54.4	64.7	80.1
		(mm)	269.7	335.1	465.8	596.6	727.4	858.2	1054.3	1250.5	1381.3	1642.8	2035.2

MT1040

Screen Size D	Diagonal	(inch)	30	40	60	80	100	120	150	180	200	240	300
	Width(H)	(inch)	24	32	48	64	80	96	120	144	160	192	240
	Width(V)	(inch)	18	24	36	48	60	72	90	108	120	144	180
Magnification K			22.9	30.5	45.8	61.1	76.3	91.6	114.5	137.4	152.6	183.2	229.0
Throwing Distance S	Wide	(inch)	41.8	56.5	85.8	115.1	144.5	173.8	217.8	261.8	291.1	349.8	437.8
		(mm)	1062.2	1434.7	2179.8	2924.8	3669.8	4414.9	5532.4	6650.0	7395.0	8885.1	11120.3
	Tele	(inch)	50.6	68.2	103.4	138.6	173.8	209.0	261.8	314.6	349.8	420.2	525.8
		(mm)	1285.7	1732.7	2626.7	3520.8	4414.8	5308.9	6649.9	7991.0	8885.0	10673.1	13355.2
Throwing Angle U	Wide	(degree)	10.4	10.3	10.1	10.1	10.0	10.0	10.0	10.0	10.0	9.9	9.9
	Tele	(degree)	8.6	8.5	8.4	8.4	8.4	8.3	8.3	8.3	8.3	8.3	8.3
V		(inch)	18.0	24	36	48	60	72	90	108	120	144	180
		(mm)	457.2	609.6	914.4	1219.2	1524	1828.8	2286	2743.2	3048	3657.6	4572
Q		(inch)	7.7	10.2	15.3	20.4	25.5	30.6	38.3	46.0	51.1	61.3	76.6
		(mm)	194.6	259.5	389.2	519.0	648.7	778.5	973.1	1167.7	1297.5	1557.0	1946.2
R		(inch)	1.3	1.8	2.7	3.6	4.5	5.4	6.7	8.0	8.9	10.7	13.4
		(mm)	34.0	45.3	68.0	90.6	113.3	135.9	169.9	203.9	226.5	271.8	339.8
P		(inch)	2.9	2.9	2.9	2.9	2.9	2.9	2.9	2.9	2.9	2.9	2.9
		(mm)	73.5	73.5	73.5	73.5	73.5	73.5	73.5	73.5	73.5	73.5	73.5
Q+P		(inch)	10.6	13.1	18.2	23.3	28.4	33.5	41.2	48.9	54.0	64.2	79.5
		(mm)	268.1	333.0	462.7	592.5	722.2	852.0	1046.6	1241.2	1371.0	1630.5	2019.7

MT1045

Screen Size D	Diagonal	(inch)	30	40	60	80	100	120	150	180	200	240	300
	Width(H)	(inch)	24	32	48	64	80	96	120	144	160	192	240
	Width(V)	(inch)	18	24	36	48	60	72	90	108	120	144	180
Magnification K			22.9	30.5	45.8	61.1	76.3	91.6	114.5	137.4	152.6	183.2	229.0
Throwing Distance S	Wide	(inch)	41.4	56.3	86.1	115.8	145.5	175.3	219.9	264.5	294.2	353.7	443.0
		(mm)	1052.6	1430.3	2185.8	2941.2	3696.6	4452.1	5585.2	6718.4	7473.8	8984.7	11251.0
	Tele	(inch)	50.8	68.6	104.3	140.0	175.7	211.4	264.9	318.4	354.1	425.4	532.5
		(mm)	1290.5	1743.7	2649.9	3556.2	4462.4	5368.7	6728.0	8087.4	8993.7	10806.2	13524.9
Throwing Angle U	Wide	(degree)	10.5	10.3	10.1	10.0	10.0	9.9	9.9	9.9	9.8	9.8	9.8
	Tele	(degree)	8.6	8.5	8.4	8.3	8.3	8.3	8.2	8.2	8.2	8.2	8.2
V		(inch)	18	24	36	48	60	72	90	108	120	144	180
		(mm)	457.2	609.6	914.4	1219.2	1524	1828.8	2286	2743.2	3048	3657.6	4572
Q		(inch)	7.7	10.2	15.3	20.4	25.5	30.6	38.3	46.0	51.1	61.3	76.6
		(mm)	194.6	259.5	389.2	519.0	648.7	778.5	973.1	1167.7	1297.5	1557.0	1946.2
R		(inch)	1.3	1.8	2.7	3.6	4.5	5.4	6.7	8.0	8.9	10.7	13.4
		(mm)	34.0	45.3	68.0	90.6	113.3	135.9	169.9	203.9	226.5	271.8	339.8
P		(inch)	2.9	2.9	2.9	2.9	2.9	2.9	2.9	2.9	2.9	2.9	2.9
		(mm)	73.5	73.5	73.5	73.5	73.5	73.5	73.5	73.5	73.5	73.5	73.5
Q+P		(inch)	10.6	13.1	18.2	23.3	28.4	33.5	41.2	48.9	54.0	64.2	79.5
		(mm)	268.1	333.0	462.7	592.5	722.2	852.0	1046.6	1241.2	1371.0	1630.5	2019.7

NOTE: *Distances may vary +/–5%.*

Downloaded from www.manualsonline.com

Ceiling Installation

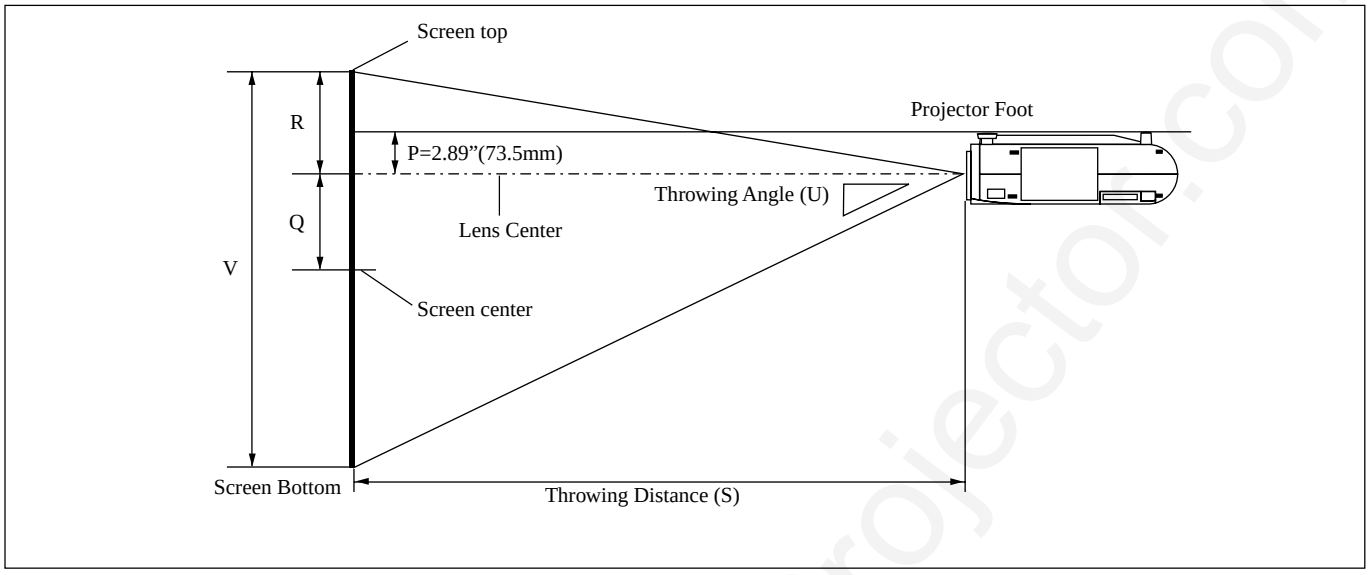

WARNING

- Installing your projector on the ceiling must be done by a qualified technician. Contact your NEC dealer for more information.
- * Do not attempt to install the projector yourself.
- Only use your projector on a solid, level surface. If the projector falls to the ground, you can be injured and the projector severely damaged.
- Do not use the projector where temperatures vary greatly. The projector must be used at temperatures between 32˚F (0˚C) and 104˚F (40˚C).
- Do not expose the projector to moisture, dust, or smoke. This will harm the screen image.
- Ensure that you have adequate ventilation around your projector so heat can dissipate. Do not cover the vents on the side or the front of the projector.

If your projector is mounted on the ceiling and your image is upside down, use the “Menu” and “Select” buttons on your projector cabinet or ▲▼ button on your remote control to correct the orientation. (See page E-23.)

Reflecting the Image

Using a mirror to reflect your projector’s image enables you to enjoy a much larger image. Contact your NEC dealer if you need a mirror. If you’re using a mirror and your image is inverted, use the “Menu” and “Select” buttons on your projector cabinet or ▲▼ buttons on your remote control to correct the orientation. (See page E-23.)

Downloaded from Projector.com

Wiring Diagram

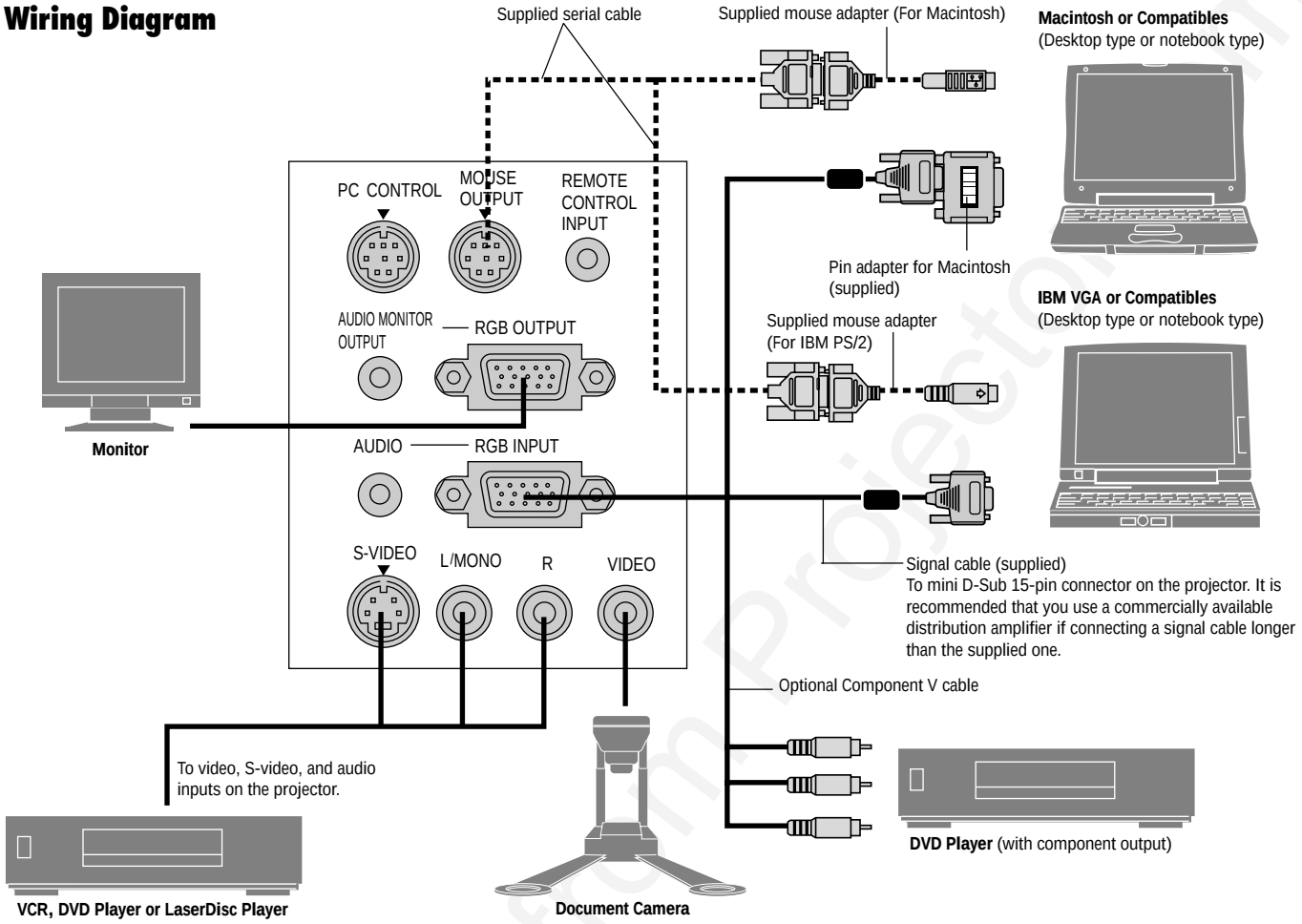

NOTE: *When using with a notebook PC, be sure to connect between the projector and the notebook PC before turning on the power to the notebook PC. In most cases signal cannot be output from RGB output unless the notebook PC is turned on after connecting with the projector.*

Remote Control Guideline for the Remote Control

1. Plug the supplied serial cable with the mouse output port of the projector into your computer's mouse port and restart your computer to gain remote mouse control.
2. When using the remote control's built-in infrared mouse on a laptop computer, the laptop's mouse, trackball or trackpad will be disabled. Disconnect the serial cable from the mouse output port and restart your computer to regain trackball or trackpad mouse control.
3. If the screen goes blank while using your remote control, it may be the result of the computer's screen-saver or power management software.
4. If you accidentally hit the OFF button on the remote control, wait one full minute and then press the ON button to resume.

Connecting Your PC or Macintosh Computer

Connecting your PC or Macintosh computer to your MultiSync MT840 (SVGA)/MT1040 and MT1045 (XGA) projector will enable you to project your computer's screen image for an impressive presentation.

To connect to a PC or Macintosh, simply:

1. Turn off the power to your projector and computer.
2. Use the signal cable that's supplied to connect your PC or Macintosh computer to the projector. For older Macintosh, use the supplied pin adapter to connect to your Mac's video port.

   NOTE:*The new Macintosh computer such as G3 will have the 15 pin HD connector. The MT840/MT1040/MT1045's "Plug and Play" data will be downloaded to the Macintosh. Therefore, the Mac adapter will not be necessary.*
3. Turn on the projector and the computer.
4. If the projector goes blank after a period of inactivity, it may be caused by a screen saver installed on the computer you've connected to the projector.

Connecting An External Monitor

You can connect a separate, external monitor to your projector to simultaneously view on a monitor the image you're projecting. To do so:

1. Turn off the power to your projector, monitor and computer, document camera or video source.
2. Use a 15-pin cable to connect your monitor to the RGB Monitor Output (Mini D-Sub 15 pin) connector on your projector.
3. Turn on the projector, monitor and the computer, document camera or video source.

Downloaded from Projector.com

When using a Macintosh with the projector, set the DIP switches of the supplied pin adapter according to your resolution. After setting, restart your Macintosh.
See the following pages for setting of the DIP switches.

- When using with a Macintosh, SVGA(800×600 :MT840)/ XGA(1024×768 : MT1040/MT1045) is recommended if your Macintosh supports this mode.
- When using with a Macintosh PowerBook, output may not be set to 800×600 unless "mirroring" is off on your PowerBook. Refer to owner's manual supplied with your Macintosh computer for mirroring.

NOTE: *A Video Adapter cable manufactured by Apple Computer is needed for a PowerBook which does not have a mini D-Sub 15-pin connector.*

Settings for Monitor Mode

Resolution \ Number of DIP switch	1	2	3	4	5	6
13" multi-scan mode /16"-13"	ON	ON			ON	ON
17" multi-scan mode /19"-13"	ON	ON			ON	
21" multi-scan mode /21"-13"	ON	ON				ON
13" fixed mode /640x480	ON	ON				
VGA/SVGA mode			ON	ON		
16" fixed mode /832x624		ON		ON		
19" fixed mode /1024x768		ON	ON			
21" fixed mode /1152x870	ON	ON	ON	ON		

NOTE: *For settings other than display modes supported by your Macintosh and the projector, use of the DIP switch may bounce an image slightly or may display nothing. If this happens, set the DIP switch to the 13" fixed mode and then restart your Macintosh. After that, restore to a displayable mode and then restart the Macintosh again. Make sure that the projector and your Macintosh are connected with the pin adapter and the supplied signal cable (mini D-Sub 15-pin connector) and then restart your Macintosh.*

Examples of DIP switch setting

17" multi-scan mode

VGA/SVGA mode

19" fixed mode

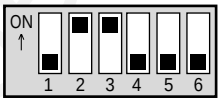

NOTE: *Refer to your computer's owner's manual for more information about your computer's video output requirements and any special identification or configuring your projector's image and monitor may require.*

Connecting Your DVD Player

You can connect your projector to a DVD player with component outputs or Video output. To do so, simply:

1. Turn off the power to your projector and DVD player.
2. If your DVD player has the component video (Y,Cb,Cr) output, use the optional 15-pin-to-RCA x 3 cable to connect your DVD player to the RGB INPUT connector on the projector.
   For a DVD player without component video (Y,Cb,Cr) outputs, use common RCA cables (not provided) to connect a composite VIDEO output of the DVD player to the Video Input of the projector.
3. Turn on the projector and the DVD player.

NOTE: *Refer to your DVD player's owner's manual for more information about your DVD player's video output requirements.*

Connecting Your VCR Or Laser Disc Player

Use common RCA cables (not provided) to connect your VCR or laser disc player to your projector. To make these connections, simply:

1. Turn off the power to the projector and VCR or laser disc player.
2. Connect one end of your RCA cable to the video output connector on the back of your VCR or laser disc player, connect the other end to the Video input on your projector. Use standard RCA audio patch cords to connect the audio from your VCR or laser disc player to the projector (if your VCR or laser disc player has this capability). Be careful to keep your right and left channel connections correct for stereo sound.
3. Turn on the projector and the VCR or laser disc player.

NOTE: *Refer to your VCR or laser disc player owner's manual for more information about your equipment's video output requirements.*

Connecting Your Computer to the Mouse Output Port

The built-in remote mouse receiver enables you to operate your computer's mouse functions from the remote control. It is a great convenience for clicking through your computer-generated presentations.
To connect the mouse output port:

1. Turn off your computer.
2. For PCs: Remove your current mouse and connect the supplied serial cable from the mouse output to your PC's mouse port. (Use the 6-pin adapter for connecting to a PS/2 computer.)
   For Macintosh: Remove your current mouse from your computer, attach the Macintosh adapter to the mouse output port's serial cable, and connect the projector to your mouse port.
3. When the built-in remote mouse receiver is available, it will disable your regular mouse, disconnect the serial cable and restart your computer.

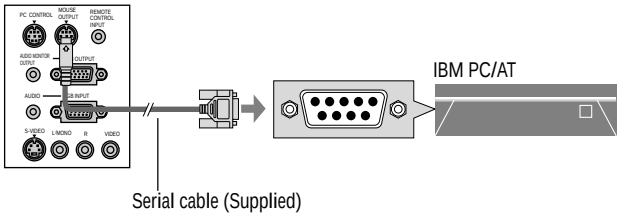

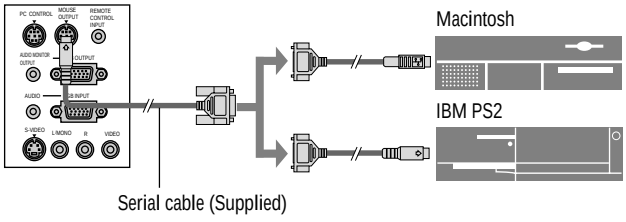

NOTE:*Some computers or software programs may not work with the MOUSE OUT port.*

3.OPERATION

This section describes how to select a computer or video source, how to adjust the picture, and how to customize the menu or projector settings.

General Controls

Before you turn on your projector, ensure that the computer or video source is turned on and that your lens cap is removed.

1. **Turn on the Projector**
   Plug the supplied power cable in the wall outlet. The projector will go into its standby mode and the power indicator will glow amber.
   Only after you press the "On" button on the projector cabinet or the full function remote control will the power indicator turn to green and the projector become ready to use.

   NOTE: *To turn the projector on by plugging in the power cable, use the menu and enable the "Auto Start" feature. (See page E-23.)*

2. **Select the Computer, Video Source or PC Card Viewer**
   Press the Source button on the remote control or the projector cabinet to select "Video" (VCR, document camera, or laser disc player), S-Video", "RGB" (computer or DVD with component output) or "PC Card Viewer" to display the image.
   Or press the "Menu" button on the remote control or the cabinet and use the menu to select your video source: "Video", "S-Video", "RGB", or "PC Card Viewer".
3. **Adjust the Image Size and the Focus**
   Use the Zoom ring to adjust the image size, then use the Focus ring knob to obtain the best focus.
   Use the "Magnify" button (+) or (-) on the remote control to make the image larger up to 400%.

4. **Turning off the Projector**
   First press the "off" button on the projector cabinet or the remote control for a minimum of two seconds. The power indicator will glow amber. Then, unplug the power cable. The power indicator will go out.

IMPORTANT:

- The projector should be unplugged if it will not to be used for an extended period.
- To turn off the image and sound briefly (five minutes or less), use the "Picture Mute" button instead of turning the projector off and on.
- The projector will display a black, blue image or logo if no input signal is present.
- Do not turn the projector off and then immediately back on. The projector needs to cool for a minute before it can be restarted.

After the projector turns off, the cooling fans keep operating for a full minute.
Do not disconnect the power cable during this time.

Using the Menus

NOTE: *The on-screen menu may not be displayed correctly while interlaced motion video image is projected.*

1. Press the "Menu" button on the remote control or projector cabinet to display the Main Menu.

   NOTE: *When using a USB mouse, click the mouse button to display the main menu. For other operations, do the same way as you use your PC mouse.*

2. Press the ▲▼ buttons on the full function remote control or the projector cabinet to highlight the menu for the item you want to adjust or set.
3. Press the ▶ button or the "Enter" button on the projector cabinet or the "Left Click" button on the full function remote control to select a submenu or item.
4. Adjust the level or turn the selected item on or off by using "Select" ◀ or ▶ buttons on the cabinet, or the "Mouse pad" on the full function remote control. The on-screen slide bar will show you the amount of increase or decrease.
5. The change is stored until you adjust it again.

   ENTER: Stores the setting or adjustments.

   CANCEL: Return to the previous screen without storing settings or adjustments.

   NOTE: *You can close the main and sub menus simultaneously by pressing the Computer/Projector Select button to cancel the Projector mode.*

6. Repeat steps 2-5 to adjust an additional item, or press "Cancel" on the projector cabinet or the remote control to quit the menu display.

Using a USB Mouse

Using a USB mouse gives you a smooth operation. A commercially available USB mouse is required.

NOTE:*There may be some brands of USB mouse that the projector does not support.*

Operate the Menus using the USB mouse

Mouse Cursor

When connecting a USB mouse to the projector, you get a mouse cursor on the screen.
Unless you use your USB mouse within 10 seconds, the mouse cursor disappears.

Menu Display

Clicking with a mouse button displays the main menu.
Clicking ▶ displays the pull-down menu.
To close the menu, click anywhere in the background.

Adjusting and Setting Display

You can select a menu item and click with a mouse button to make adjustments and setting.

Examples

Click (or press and hold) the mouse button ◀ or ▶ to adjust the brightness.
Or click and drag the mouse button on the slide bar horizontally to adjust it.
To save the adjustments, click ☒. The display is closed.
If you click anywhere in the background while displaying adjustment and setting menu or dialog box, you will get the main menu at the clicking point.

Downloaded from Projector.com

MENU Tree

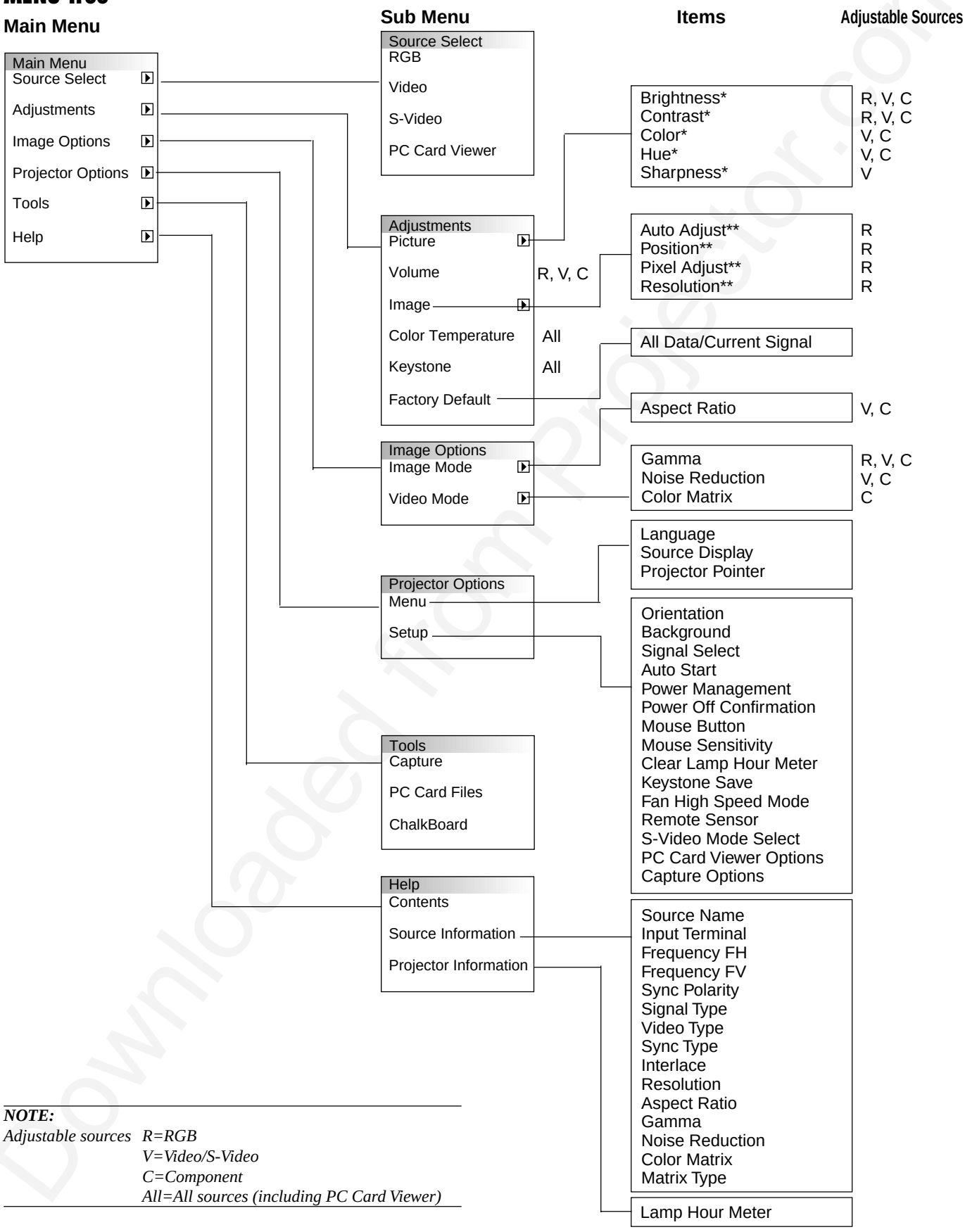

NOTE:

Adjustable sources *R=RGB*
V=Video/S-Video
C=Component
All=All sources (including PC Card Viewer)

Downloaded from Projector.com

Menu Elements

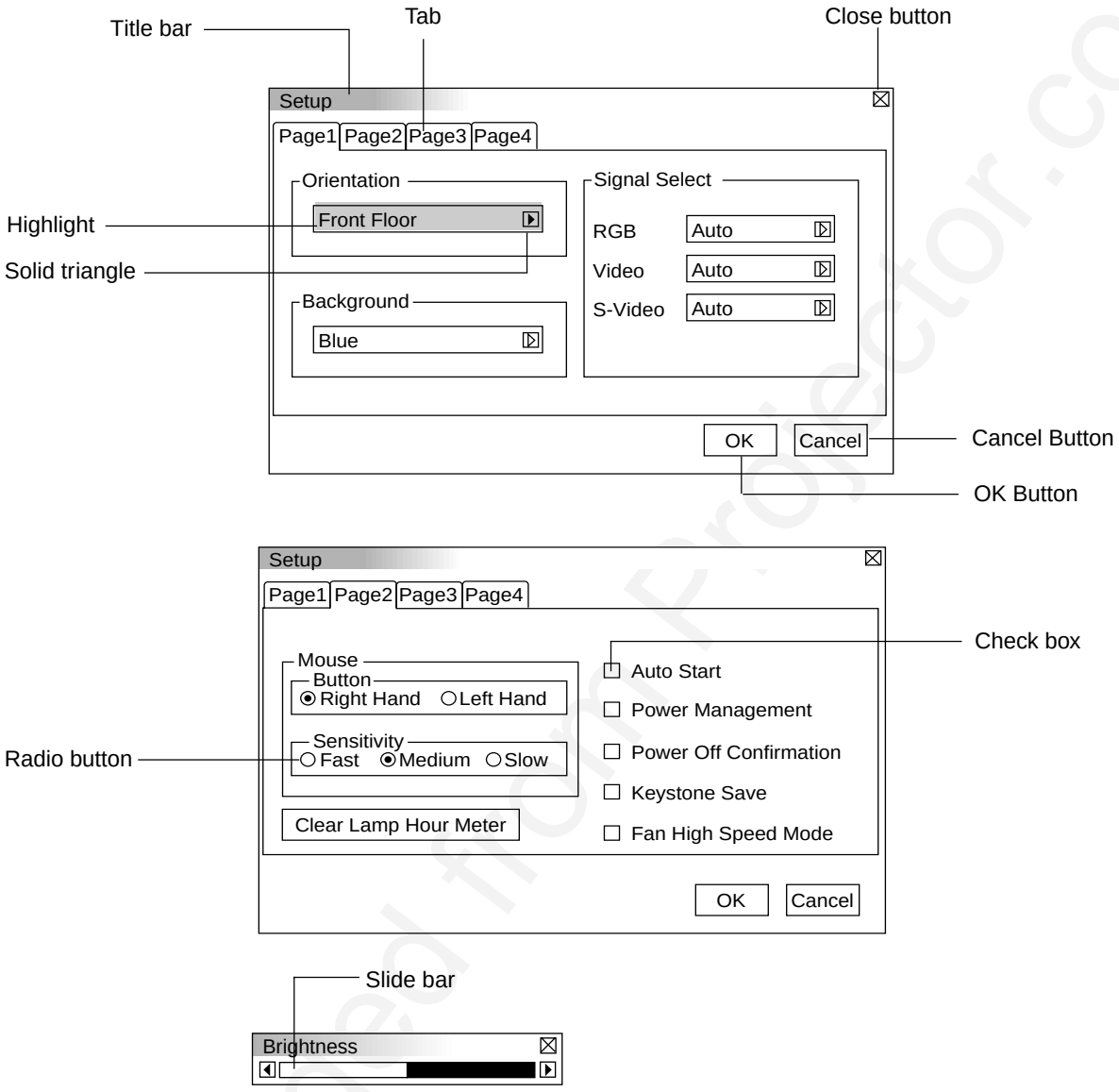

Menu windows or dialog box typically have the following elements:

Title bar: Indicates the menu title.

X Close button: Click to close the window with saving changes. (USB mouse only)

Highlight: Indicates the selected menu or item.

Solid triangle: Indicates further choices are available. A highlighted triangle indicates the item is active.

Tab: Indicates a group of features in a dialog box. Clicking on any tab brings its page to the front.

Radio button: Use this round button to select an option in a dialog box.

Check box: Place a checkmark in the square box to turn the option On.

Slide bar: Indicates settings or the direction of adjustment.

OK button: Press to confirm your setting. You will return to the previous menu.

Cancel button: Press to cancel your setting. You will return to the previous menu.

Downloaded from Projector.com

Menu Descriptions & Functions

Source Select

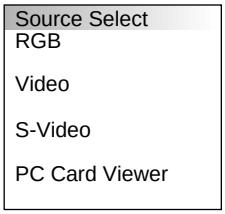

Enables you to select a video source such as a VCR, DVD player, laser disc player, computer or document camera depending on what is connected to your inputs. Press the "Select" button on the projector cabinet or ▲▼ buttons on your remote control to highlight the menu for the item you want to adjust.

RGB

Selects the computer connected to your RGB or component signal.

NOTE: *An optional component cable (Component V cable) is needed for a component signal. Select "Component" from the Input Signal submenu to display the component signal.*

Video

Selects what is connected to your Video input-VCR, laser disc player, DVD player or document camera.

S-Video

Selects what is connected to your S-Video input-VCR, DVD player, or laser disc player.

NOTE: *A frame may freeze for a brief period of time when a video is played back in fast-forward or fast-rewind with a Video or S-Video source.*

PC Card Viewer

This feature enables you to make presentations using a PC card that contains captured images and slides created with the exclusive PC Card Viewer Utility contained in the CD-ROM. See page E-27 for installing the PC Card Viewer Utility. The starting screen for the PC Card Viewer varies depending on the settings of the Setup's Page 3. See Setup on page E-24.

NOTE: *Even if you switch the current PC Card Viewer source to another source, the current slide is retained. When you return back to the PC Card Viewer, you will get the slide that has been retained.*

A launcher will appear when you press the MENU button.

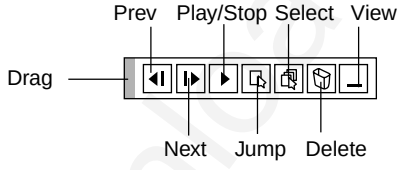

The launcher is a tool bar including the following buttons:

Drag: Drags to move the tool bar. (for USB mouse operation only)

Prev: Returns to the previous slide or folder.

Next: Advances to the next slide or folder.

Play/Stop: Plays back automatically or manually depending on the setting on PC Card Viewer Options of the menu. This allows you to stop Auto Play while you are playing back and to resume playing from the selected slide or folder when "Auto Play" is selected. This allows you to move on to the next slide when "Manual Play" is selected.

Jump: Displays a list of slides while you are playing back.

Select: Displays a list of folders while you are playing back.

Delete: Deletes a captured slide(s) or all the captured slides in the selected folder.

View: Hides the tool bar while you are playing back. Clicking with the right button of a mouse shows it again.

Adjustments

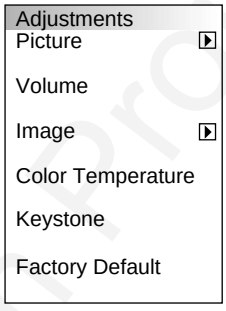

Provides access to controls for your image and sound. Use the "Select" button on the projector cabinet or ▲▼ buttons on your remote control to highlight the menu for the item you want to adjust.

Picture (not available for PC Card Viewer)

Brightness: Adjusts the brightness level or the back raster intensity.

Contrast: Adjusts the intensity of the image according to the incoming signal.

Color: Increases or decreases the color saturation level (not valid for RGB).

Hue: Varies the color level from +/- green to +/-blue. The red level is used as reference. This adjustment is only valid for Video and Component inputs (Not RGB).

Sharpness: Controls the detail of the image for Video (Not for RGB and Component).

Volume (not available for PC Card Viewer)

Adjusts the sound level of the projector.

Image

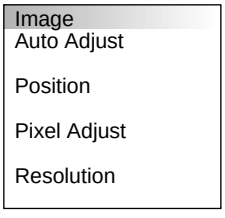

Allows for adjustments of the image position and stability.

Downloaded from Projector.com

Auto Adjust:

When "Auto Adjust" is set to "On", the projector automatically determines the best resolution for the current RGB input signal to project an image using NEC's Advanced AccuBlend Intelligent Pixel Blending Technology.

The image can be automatically adjusted for geometry and stability; "Horizontal Position", "Vertical Position" and "Pixel Adjust."

On: Automatically adjusts image "Horizontal Position", "Vertical Position" and "Pixel Adjust."

Off: User can adjust the image display functions ("Horizontal Position", "Vertical Position" and "Pixel Adjust") manually.

Horizontal/Vertical Position (when Auto Adjust is off):

Adjusts the image location from left to right.

This adjustment is made automatically when the Auto Adjust is turned on.

Pixel Adjust (when Auto Adjust is off):

Displays the Clock and Phase adjustments.

Clock: Use this item with the "Auto Adjust on" to fine tune the computer image or to remove any vertical banding that might appear. This function adjusts the clock frequencies that eliminate the horizontal banding in the image. Press the ◀ and ▶ buttons until the banding disappears. This adjustment may be necessary when you connect your computer for the first time. This adjustment is made automatically when the Auto Adjust is turned on.

Phase: Use this item to adjust the clock phase or to reduce video noise, dot interference or cross talk. (This is evident when part of your image appears to be shimmering.) Use the ◀ and ▶ buttons to adjust the image.

Use "Phase" only after the "Clock" is complete.

This adjustment is made automatically when the Auto Adjust is turned on.

Resolution (when Auto Adjust is off):

This allows you to activate or deactivate the Advanced AccuBlend feature.

Auto: Turns on the Advanced AccuBlend feature. The projector automatically reduces or enlarges the current image to fit the full screen.

Native: Turns off the Advanced AccuBlend feature. The projector displays the current image in its true resolution.

NOTE: *While you are displaying an image with higher resolution than the projector's native resolution, even when you are in the Native mode, the image is displayed full screen using the Advanced AccuBlend feature.*

Color Temperature

This feature adjusts the color temperature using the slide bar.

Move the slide bar to the right to increase the color temperature for a bluish image; to the left to decrease it for a reddish image.

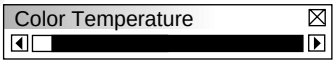

Keystone

This feature corrects the keystone (trapezoidal) distortion to make the top of the screen longer or shorter to be the same as the bottom.

Use the ◀ or ▶ buttons on the slide bar to correct the keystone (trapezoidal) distortion.

NOTE: *The maximum keystone angle that can be corrected is 15 degrees upward and downward with the projector placed horizontally. However, a picture will be blurred if you correct the keystone angle beyond +12 degrees or more for SXGA signal on MT840.*

Factory Default

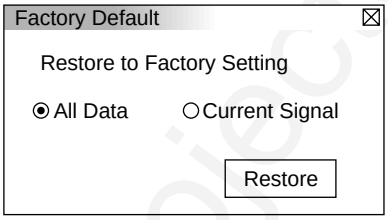

Changes all adjustments and setting to the factory preset for each source individually except Lamp Usage Hours. (To reset the lamp usage time, see "Clear Lamp Hour Meter" on page E-23.

All Data: Reset all the adjustments and settings for all the signals to the factory preset.

Current Signal: Resets the adjustments for the current signal to the factory preset levels.

Image Options

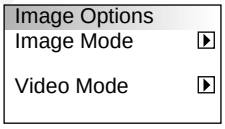

Provides optional controls such as gamma correction, component signal selection, wide screen and video noise reduction features.

Image Mode

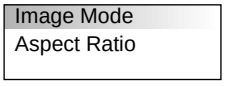

Allows you to select the item you want to adjust.

NOTE: *Aspect Ratio is not available for "PC Card Viewer"and "RGB".*

Aspect Ratio:

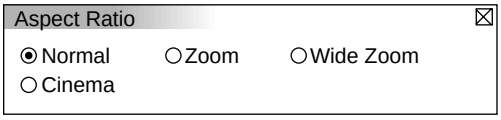

Allows you to choose the best screen size mode to fit on the screen.

Normal: Displays normal video picture with a 4-to-3 aspect ratio as is.

Zoom: Displays DVD's video picture with a 16-to-9 aspect ratio expanded in the horizontal and vertical direction, maintaining the original proportion.

Wide Zoom: Displays DVD's squeezed video picture with a 16-to-9 aspect ratio expanded in the horizontal direction, converted to 4-to-3 aspect ratio.

Cinema: Displays DVD's squeeze video picture with a 16-to-9 aspect ratio compressed in the vertical direction, maintaining the 16-to-9 aspect ratio.

Downloaded from Projector.com

Video Mode

Video Mode
Gamma
Noise Reduction
Color Matrix

Gamma:

Gamma
◉Normal ○Natural 1 ○Natural 2

Use the ◀ or ▶ buttons to choose "Normal" when in a lighted room and "Natural 1&2" when in a darkened room. "Natural 1" for better flesh tone; "Natural 2" for true reproduction of middle tones.
Each mode is recommended for :

Normal: Default for RGB signal (Factory preset)
Natural 1: Default for Video and S-Video signal
Natural 2: Default for component signal

Noise Reduction:

Noise Reduction
◉Off ○Low ○Medium ○High

You can select one of the following three levels for reducing video noise to your preference.

NOTE: *The lower the Noise Reduction level, the better the image quality by way of higher video bandwidth.*

Color Matrix

Color Matrix
Select Color Matrix
◉HDTV ○SDTV
Select Color Matrix
◉B-Y/R-Y ○Cb/Cr ○Pb/Pr

First select an appropriate color matrix to fit your component signal for HDTV or SDTV. Then select an appropriate matrix type from B-Y/R-Y, Cb/Cr or Pb/Pr.

NOTE: *The Color Matrix feature is available for component video signal only.*

Projector Options

Projector Options
Menu
Setup

Enables you to set preferences and other operating options.

Menu

Menu
Language
English
Source Display
○On ◉Off
Projector Pointer
Pointer 1
Pointer 1
Pointer 2
Pointer 3
Pointer 4
Pointer 5
Pointer 6
Pointer 7
Pointer 8

Allows you to set preferences for the on-screen menu.

Language:

You can choose one of seven languages for on-screen instructions. The options are: English, German, French, Italian, Spanish, Swedish and Japanese.

Projector Pointer:

This enables you to select from eight different Pointer icons for the "Pointer" button on your remote control.
After moving your Pointer icon to the area you want on the screen, press the Magnify button on the remote control to enlarge the selected area on the screen.

NOTE: *There may be cases where the Pointer function is not available for a non-interlace signal at 15kHz such as video game.*

Source Display:

You can turn on and off the information for input name such as VIDEO and RGB.
When this option is on, the current input will be displayed each time you switch sources or turn on the projector.

Downloaded from Projector.com

Setup

Enables you to set operating options.
Press “OK” to save your changes for all the features of Page1, Page2, Page3 and Page4.

[Page1]

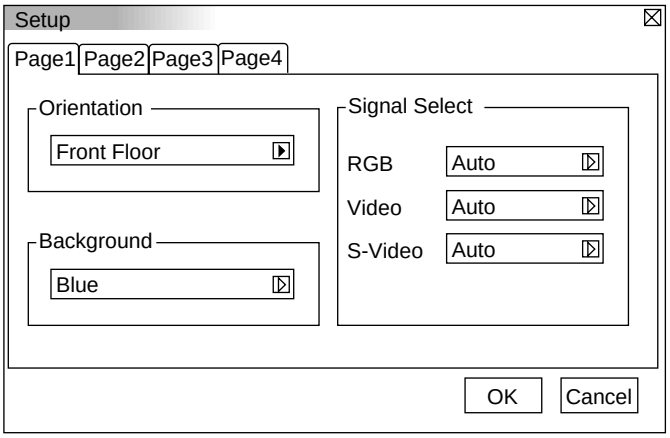

Orientation:

This reorients your image for your type of projection.
The options are:front floor projection, rear ceiling projection, rear floor projection, and front ceiling projection.

Background:

Use this feature to display a black, blue screen or logo when no signal is available.

> ***Transferring a logo from your PC***
> *You can transfer your background logo from your PC to the projector. To proceed as follows:*
> *1) Install the PC Control Utility 1.0 on your PC from the supplied CD-ROM. See page E-27 for installation.*
> *2) Connect the PC CONTROL port of the projector with the serial port of your PC with the supplied serial cable and then turn on the projector.*
> *3) Start the PC Control Utility on your PC.*
> *4) Click "Logo Transfer" button.*
> *For more detailed information, see Readme.txt file included on the supplied CD-ROM.*
>
> ***NOTE:*** *File size must be 64KB or less. JPEG and BMP images are available only.*

Signal Select:

<RGB>

Allows you to choose "RGB" for an RGB source such as a computer, or "Component" for a component video source such as a DVD player. Normally select "Auto" and the projector automatically detects a component signal. However there may be some component signals that the projector is unable to detect. If this is the case, select "Component".

<Video &S-Video System Select>

This feature enables you to select composite video standards manually. Normally select "Auto".
When you select the video standard for Video and S-Video separately, first select the radio button and then select the video standard from the pull-down menu.
This must be done for Video and S-Video respectively.

[Page2]

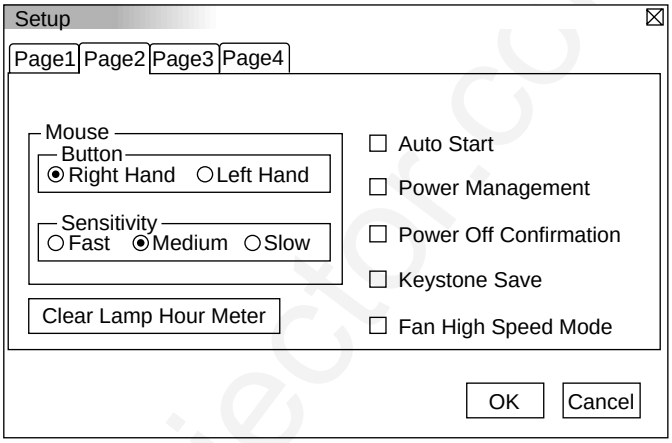

Auto Start:

Turns the projector on automatically when the power cable is inserted into an active power outlet. This eliminates the need to always use the “Power” button on the remote control or projector cabinet.

Power Management:

When this option is on and there is no RGB input for five minutes or more, the projector will automatically turn itself off.

Power Off Confirmation:

This option determines whether a confirmation dialog for turning off the projector will appear or not.

> ***NOTE:*** *When the confirmation message is displayed, you must be in the Projector mode to operate your projector using the remote control. If not, press the Computer/Projector Select button to change your projector to the Projector mode. The button lights to indicate that you are in the Projector mode.*

Mouse Settings:

This option lets you to change your USB mouse settings. The mouse settings feature is available for USB mouse only. Choose the settings you want:

Mouse Button:	“Right Hand” or “Left Hand”
Mouse Sensitivity:	“Fast”, “Medium” or “Slow”

Keystone Save:

This option enables you to save your current keystone settings. Saving your change once affects all sources. The changes are saved when you turn off the projector.

Fan High Speed Mode:

This option allows you to select two modes for fan speed: high-speed mode and normal speed mode.
When you wish to cool down the temperature inside the projector quickly, check this box. This is convenient especially when the projector is installed on the ceiling.

Clear Lamp Hour Meter:

Resets the lamp clock back to zero. Pressing this button appears the “Clear Lamp Usage ?” confirmation dialog box. To reset the lamp usage hour, press “OK”.

> ***NOTE:*** *The projector will turn off and go into standby mode after 2100 hours (1600 hours for MT1045) of service. If this happens, press the “Help” button on the remote control for ten seconds to reset the lamp clock back to zero. Do this only after replacing the lamp.*

Downloaded from Projector.com

[Page 3]

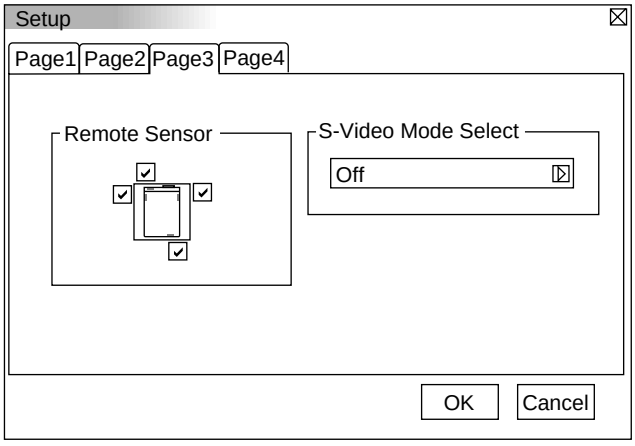

Remote Sensor

This option determines which remote sensors on the projector are effective in wireless mode.
The options are: front, rear, right, or left. Checked sides show that they can accept the infrared signal from the supplied remote control.

S-Video Mode Select:

This feature is used to select the S-Video signal detection mode. This allows identifying of the S-Video signals with different aspect ratio (Zoom signal 16:9, Wide Zoom signal 4:3).

S1 ..... Identifies a Zoom signal only.
S2 ..... Identifies Zoom or Wide Zoom signal.
OFF ..... Does not identify any S-video signal.

[Page 4]

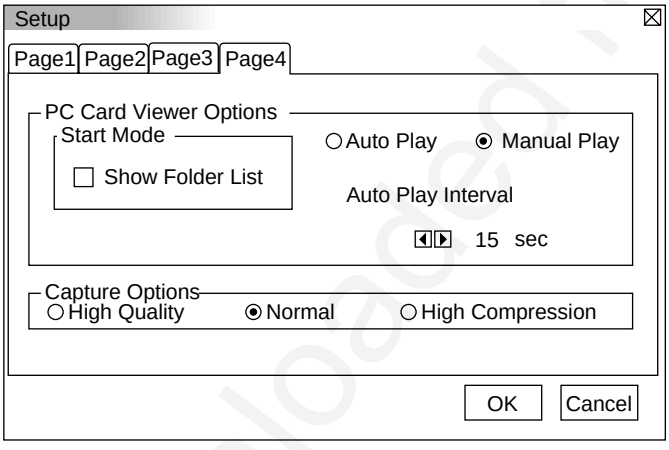

PC Card Viewer Options

Start Mode

Sets the starting condition when PC Viewer input is selected on the projector.

Show Folder List

When PC Card input is selected on the projector, the folder lists will be displayed and allows you to select the presentation from the PC Card.

Auto Play

If this option is checked, any given slide will start to play automatically. You can specify interval time between 5 and 300 seconds.

NOTE: *The Auto Play Interval time set on the PC Control Utility overrides the one set here.*

Manual Play

Views a slide manually when PC Card Viewer input is selected.

NOTE: *The Auto Play and Manual Play options determine the behavior of the Play/Stop [▸ / ■] icon on the Viewer tool bar.*

When selecting "Show Folder List" or "Manual Play" while the "Auto Play" feature is not checked, and you select PC Card Viewer for the input source, you can manually advance to the next slide or the previous slide.

NOTE: *If you check "Auto Play" and select "PC Card Viewer" on the projector, the slides will automatically start to play back from any given slide.*

Capture Options (available for JPEG only)

You have three options for JPEG compression quality: High quality, Normal and High Compression.

High Quality

Gives quality of JPEG a priority.

Normal

Gives normal JPEG quality.

High Compression

Gives compression a priority.

Tools

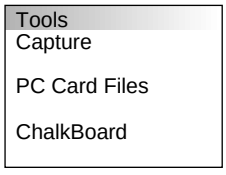

Provides tools for capturing images, displaying files in a PC Card and drawing.

NOTE: *The "Tools" feature is required for a PC card.*

Capture

Allows you to capture an image from a source that is currently being displayed. The image is saved as JPEG in the PC card. When you select Capture from the menu, you will get a tool bar. You can capture an image directly using the tool bar when the menu is not displayed.

Downloaded from Projector.com

The tool bar includes the following buttons:

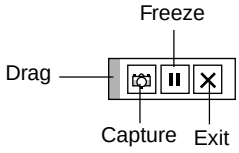

Drag: Drags to move the tool bar. (for USB mouse operation only)

Get: Captures an image and save it as a JPEG file in a PC card.

Freeze: Freezes and unfreezes images.

Exit: Exits the Capture function.

Unless a PC card is inserted into the PC Card Access slot of the projector, "No Card" is displayed. This means that the Capture feature is not available.
The "Card Error" display means that the free space of the PC card is insufficient for saving images. Make more space available on the card by erasing unwanted images with your PC. The number of images that can be captured depends on the size of the PC card.

NOTE: *Be sure not to turn off the power or remove the PC card while capturing an image. Doing so could cause a loss of the data in the PC card or damage to the card itself.*

NOTE: *Captured images with higher resolution than the projector's native resolution cannot be displayed correctly.*

PC Card Files

Displays a list of all the files stored in the PC card so that you can select a file you want to display. You can also sort files by file name or date, or display the file.
Although a list of all the files in the PC card is displayed, you can view files in text, idx, HTML, JPEG and BMP format only.

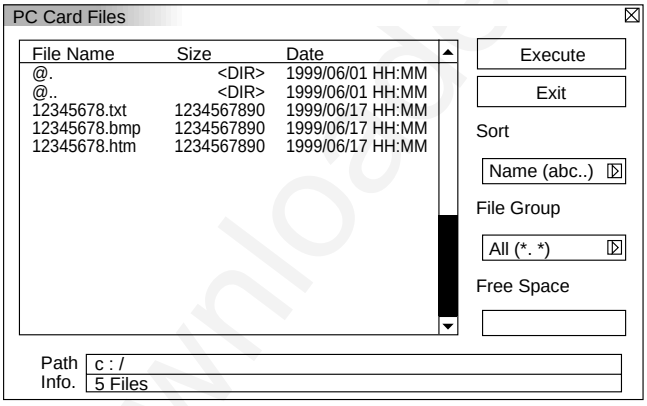

Selecting “Execute” displays the file you selected.

ChalkBoard (available only when using with USB mouse)

Provides the tool bar for producing freehand drawings.

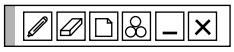

Pen: Left-click and drag to draw. Right-click to display the pen palette containing four lines of different thickness from which you can select a line you prefer by left-clicking.

Erase: Left-click and drag to erase part of a drawing. Right-click to display the eraser palette containing four eraser of different thickness from which you can select an eraser you prefer by left-clicking.

Clear: Clears the drawing completely from the ChalkBoard screen.

Color: Selects a color. Left-click to display the color palette from which you can select a color you prefer by left-clicking.

View: Hides the tool bar by left-clicking. Right-clicking anywhere on the screen displays the ChalkBoard tool bar again.

Exit: Clears the complete drawing and exits the ChalkBoard.

NOTE:
** The ChalkBoard feature is available only when a USB mouse is used. Freehand drawings cannot be saved or captured.*
** The main menu is not available while you display the ChalkBoard screen.*
** The Capture and the Source Display function are not available on ChalkBoard screen.*
** Switching slides clears a drawing completely.*
** Selecting BMP and JPEG files automatically switches to the PC Card Viewer source.*

Help

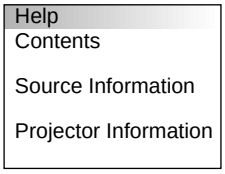

Contents

Provides an online help about how to use the menus. An undelined link means that you can move to an adjustment item directly. Selecting the underlined link and pressing ENTER moves to the corresponding adjustment item.

Source Information

Displays the status of the current signal. This dialog box has three pages.

Projector Information

Displays the lamp usage hours.

Downloaded from Projector.com

Using the PC Card Viewer function

NOTE:
When using the supplied software (CD-ROM)
The software is designed to use with a personal computer only. Do not play the software on CD player. Doing so could cause damage to speakers.

Features

The Viewer feature allows slides stored on a PC card to be displayed on the projector. Even if no computer is available, presentations can be conducted simply with the projector. This feature is convenient for holding presentations at meetings and in offices, as well as for playing images taken on digital cameras.

Easy to use

- Presentations can be started immediately simply by inserting a PC card (not supplied)
- Easy slide switching
- Remote control operation
- Jumping to list of slides or any specific slide

High quality images

- High resolution up to 1024×768 dots(MT840: up to 800×600 dots)
- 24-bit full color playback
- Viewing of digital camera images

Simpl utility software (for computer)

- PC Card Viewer software operable on Windows 95/NT
- Slides can be created by capturing the currently displayed image
- Control screen for displaying lists of slides and editing
- Automatic slide conversion of files created with Microsoft PowerPoint 95 and 97

* Microsoft, Windows and PowerPoint are registered trademarks of Microsoft Corporation.

Inserting and Ejecting the PC Card

The PC card is used to view presentation data prepared on the computer and to capture and play images projected with the projector.

Inserting the PC Card

- Hold the PC card horizontally and insert it slowly into card slot with its top facing up.
- The eject button pops out once the PC card is fully inserted. Check that the PC card is fully inserted.

NOTE: *Do not try to force the PC card into the slot.*

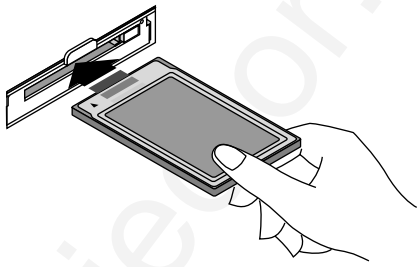

Ejecting the PC Card

Press the eject button. The PC card pops out a little. Grasp the edges of the PC card and pull it out. Do not eject the PC card while its data is being accessed.

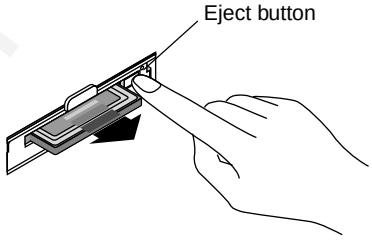

Direction for Inserting the PC Card
The PC card has a top and bottom and must be inserted into the PC card slot in a specific direction. It cannot be inserted backwards or upside-down. Attempting to force it into the slot in the wrong direction may break the internal pin and damage the card slot. Refer to the PC card's operating instructions for the proper direction of insertion.

PC Card Type

The PC Card Access slot accepts PCMCIA Type II.

Downloaded from Projector.com

Installing the PC Card Viewer Software

Before Installing

Perform the following before installing the PC Card Viewer software:

- If Windows95 is already started, exit all applications. Installation may not be performed properly if any applications are running.

Installation

Install the viewer software as described below.
To quit installation before it is completed, press the "Cancel" button then follow the instructions in the dialog box.

1. Start up Windows95.

2. Insert the CD-ROM into the CD-ROM drive.
   The auto CD play function automatically starts the CD-ROM's program and the contents screen appears.

   * The auto CD play function operates if the "Auto insert notification" box in the computer's CD-ROM control panel is checked. (The box is checked by default.)

3. Click [Installing the PC Card Viewer Utility 1.0]
   The setup dialog appears.

   * Follow the instructions in the setup dialog to complete the installation.

For instructions on uninstalling the PC Card Viewer software, see page E-31.

Starting Up the PC Card Viewer Software on your PC

(PC Card Viewer Utility 1.0)

Use the PC Card Viewer Utility 1.0 for creating viewer slides.
To start the PC Card Viewer software:

* Select [Start]-[Programs]-[NEC PROJECTOR TOOLS]-[PC Card Viewer Utility 1.0].

Refer to online help for instructions on using the PC Card Viewer software.

Contents of the English version PC Card Viewer software (PC Card Viewer Utility 1.0)

This is the software used for creating PC Card Viewer slides. In this manual it is referred to as the "PC Card Viewer software".

PC CARD VIEWER PPT CONVERTER 3.0

This is an application that converts files created with Microsoft PowerPoint 95 or 97 into indexes so that they can be played directly with the PC Card Viewer Utility 1.0.
PC Card Viewer PPT Converter is installed automatically when you install the PC Card Viewer Utility.
To start PC Card Viewer PPT Converter:

* Select PC Card Viewer PPT Converter from NEC PROJECTOR TOOLS.

Basic Operation of the PC Card Viewer Software

PC Card Viewer Utility is an application for editing documents, converting them into slides and storing them on PC cards as playback data (indexes) for presentations using projectors.

Downloaded from Projector.com

Operating the PC Card Viewer Function from the Projector (playback)

This section describes the operation for showing slides of presentation documents created using the PC Card Viewer function with the projector.
It is also possible to make slides directly from the images projected with the projector.

Projecting slides

1. Insert a PC card into the card slot.
   Insert the PC card with the side with the insertion direction arrow on the top.
   * Press the eject button to eject the card.

2. Select the "PC Card Viewer" from the input menu.
   1) Press the MENU button to display the main menu, use the ▲ and ▼ buttons to select the Source Select, then press the ▶ button to display the source menu.
   2) Select the "Viewer" using the ▲ and ▼ buttons.

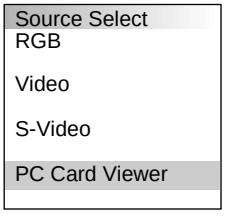

3. Projector slides.

Checking "**Show Folder List**" means that selecting PC Card Viewer input displays a list of the folders in the PC card and if "**Auto Play**" is checked the projector automatically starts to play slides at the first slide of the folder you have selected.
When selecting "**Show Folder List**" or "**Manual Play**" while the "**Auto Play**" feature is not checked, and you select PC Card Viewer for the input source, you can manually advance to the next slide or the previous slide. See page E-24 for more details.

A tool bar will appear when you press the MENU button on the remote control or the projector cabinet or clicking with the right button of a mouse.

NOTE:To use the tool bar, press the Computer/Projector Select button so that you can be in the Projector mode and the button can light in red.

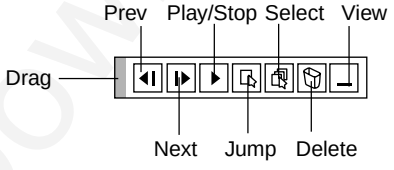

The tool bar includes the following buttons:

	Drag:	Drags to move the tool bar. This is available for USB mouse operation only.
◀I	Prev:	Returns to the previous slide or folder. Or this lets you play slides back in reverse.
I▶	Next:	Advances to the next slide or folder. Or this lets you play slides back.
▶	Play:	Play/Stop: Plays back automatically or manually depending on the setting on PC Card Viewer Options of the menu. This allows you to stop Auto Play while you are playing back and to resume playing from the selected slide or folder when "Auto Play" is selected. This allows you to move on to the next slide when "Manual Play" is selected.
	Jump:	Displays a list of slides while you are playing back.
	Select:	Displays a list of folders while you are playing back.
	Delete:	Deletes a captured slide(s) or all the captured slides in the Capture – specific folder.
_	View:	Hides the tool bar while you are playing back. Pressing the MENU button or clicking with the right button of a mouse shows it again.

NOTE:
* *The tool bar for PC Card Viewer is not available if you display the ChalkBoard and the Capture tools, and Main menu using the remote control.*
  When using a USB mouse you can display the ChalkBoard tool bar, the Capture tool bar and Main menu as well as the PC Card Viewer tool bar.
* *The tool bar is operated with buttons on the remote control, cabinet, and USB mouse.*

If no memory card is inserted in the PC CARD ACCESS slot, there is no signal, and a black, blue or logo background is displayed, depending on the setting.

Playback is stopped when ◀ or ▶ on the remote control or the cabinet is pressed in Auto Play mode.

NOTE: *Up to 12 indexes can be displayed on the list of folders. The folder in the right bottom is always a folder exclusively for captured images, but is only displayed when images have been captured. To display the list of folders when there are 13 or more indexes stored on the PC card, select "Edit index" from the PC Card Viewer software's "File" menu and move the index you want to display to within 12 indexes from the top of the folder index. For details on indexes, refer to the PC Card Viewer software's help folder.*

Downloaded from Projector.com

When the tool bar is not displayed:

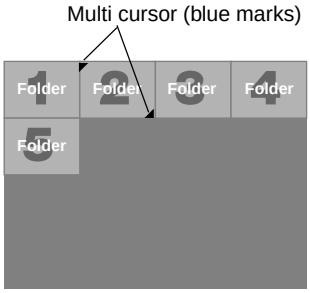

When the tool bar is not displayed, use the ◀ or ▶ button to advance to the next folder or return to the previous folder.

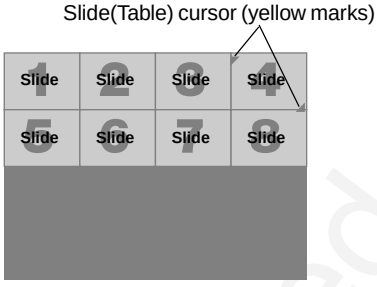

When the tool bar is not displayed, use the ◀ or ▶ button to advance to the next slide or return to the previous slide.

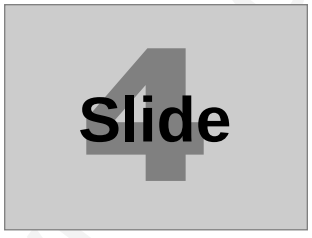

NOTE: *To use the ◀ or ▶ button to advance to the next slide or folder, or return to the previous slide or folder, you must be in the Projector mode.*
To be in the Projector mode, press the Computer/Projector Select button and the button lights in red.

Auto Play Mode

- If the "Auto Play" option is selected in "PC Card Viewer Options" of the menu, any given slide will start to play automatically. You can also specify Auto Play Interval between 5 and 300 seconds.

Switching to Slides Directly from Other Input Modes

With this function it is possible to switch directly to a slide when the picture of a VCR or computer is being projected.
Example:
When conducting presentations using a combination of slides and moving pictures from a VCR, etc., it is possible to switch from a PC Card Viewer slide to the video picture then back to the PC Card Viewer slide simply by using the Source button.

NOTE: *Even if you switch the current PC Card Viewer source to another source, the current slide is retained. When you return back to the PC Card Viewer, you will get the slide that has been retained.*

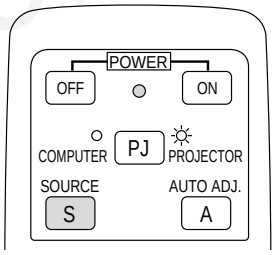

NOTE: *The PC card editing operation cannot be performed from the projector. Do so using the PC Card Viewer software.*

Downloaded from Projector.com

Capturing Images Displayed on the Projector

Storing images displayed on the projector on the PC card

Preparations:

Insert the PC card into the card slot.

Insert the PC card with the side with the insertion direction arrow on the top.

* Press the eject button to eject the card.

1. Project the image you wish to store on the projector.
2. Select the “Capture” from the Tools menu.

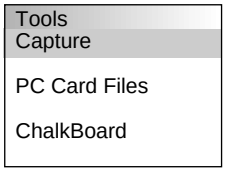

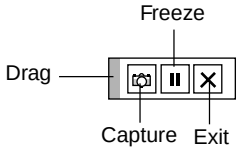

3. A tool bar will appear.

The tool bar includes the following buttons:

Drag: Drags to move the tool bar (for USB mouse operation only).

Capture: Captures an image and save it as a JPEG file in a PC card.

Freeze: Freezes and unfreezes images.

Exit: Exits the Capture function. Another option to exit the Capture function is to press MENU or CANCEL button on the remote control or projector cabinet.

* The tool bar for Capture is not available if you display the ChalkBoard and the PC Card Viewer tools, and Main menu using the remote control.
When using a USB mouse you can display the ChalkBoard and the PC Card Viewer tools, and Main menu as well as the Capture tool bar.

NOTE: *You can compress a captured file (JPEG) using the Capture Options in the Setup dialog. See page E-24.*

NOTE: *Captured images with higher resolution than the projector's native resolution cannot be displayed correctly.*

NOTE:
- *File size of the captured image varies depending on the resolution of an input signal.*
- *Since an image data is compressed with the JPEG format, the image is slightly degraded.*

NOTE: *An hourglass indicating that an image is being captured appears on the projector's display. Do not eject the PC card or turn off the projector's power while this icon is displayed. Doing so will damage the PC card data.*
If the PC card data is damaged, use a computer to repair the data.

NOTE: *The folder in the right bottom is always a folder exclusively for captured images. To display the list of folders when there are 13 or more indexes stored on the PC card, select "Edit index" from the PC Card Viewer software's "File" menu and move the index you want to display to within 12 indexes from the top of the folder index. For details on indexes, refer to the PC Card Viewer software's help file.*

Downloaded from Projector.com

Deleting Captured Images

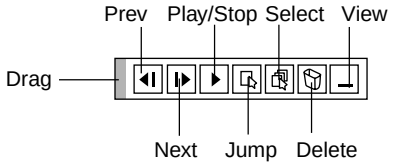

Using the Delete button on the tool bar for PC Card Viewer can delete captured images.
To delete captured images:
1) Select PC Card Viewer.
2) Use ▶ button to select the Capture folder in the right bottom of the screen.
3) Press the MENU button to display the tool bar.
4) Use the ◀ or ▶ button to select the Delete icon and press the ENTER button or click with a mouse button.

Viewing Digital Images

Digital images can be played with the PC Card Viewer if the following conditions are met:

- If the image can be stored on an MS-DOS format PC card
- If the image can be stored in a format supported by the PC Card Viewer.
  With the PC Card Viewer, images on the card are searched for in directories and images in JPEG or BMP format are recognized as slides.
  Searchable directories are directories within two steps from the root directory, and searchable images are images within the first 12 files in the directory. Only file and slide switching are possible.

NOTE: *The maximum number of images recognized as slides within one directory is 128.*

Uninstalling the PC Card Viewer Software

Even if you do now know the PC Card Viewer software's file names or where they are stored, the PC Card Viewer software files can be easily removed from the system using the "Install/Uninstall Applications" control panel in Windows 95. (Normally there is no need to perform this operation.)

Uninstalling the software

Use the procedure described below to uninstall the PC Card Viewer software files.

1. From the "Start" menu, select "Settings" then "Control Panels".

2. In the "Control Panels" dialog box, double-click on "Add/Remove Programs".

3. In the "Add/Remove Programs Properties" dialog box, click the "Setup/Remove" tab, then select "PC Card Viewer Utility 1.0" from the list of applications and click on "Add/Remove".

4. In the "Confirm File Deletion" dialog box, click "Yes".

5. Once the application is uninstalled, click on "OK" in the "Remove Program From Your Computer" dialog box.

Downloaded from Projector.com

Terminology

PC card	This is the name of a card currently being standardized by the Japan Electronic Industry Association (JEIDA) and PCMCIA (Personal Computer Memory Card Interface Association) of the United States.
TYPE (I, II and III)	PCMCIA 2.1 PC cards are divided into three types according to their thickness: Type I (3.3 mm), Type II (5.0 mm) and Type III (10.5 mm).
BMP	A type of image format. The standard Windows Bit Map format used for MS-DOS/Windows-compatible computers.
JPEG	A type of image format. "JPEG" is the abbreviation of Joint Photographic Experts Group. JPEG compression offers efficient data storage. The data not required for displaying the image is identified and deleted. Since the data is deleted, JPEG algorithms are said to be irreversible. This means that once the image is compressed, the decompressed image it is not the same as the original image.

Downloaded from Projector.com

4. MAINTENANCE

This section describes the simple maintenance procedures you should follow to replace the lamp, clean the filter, and replace the batteries in the remote control.

Replacing the Lamp

After your lamp has been operating for 2000 hours (1500 hours : MT1045) or longer, the “Status” light in the cabinet will go on and the message will appear. Even though the lamp may still be working, replace it at 2000 (1500 hours : MT1045) hours to maintain optimal projector performance.

CAUTION

- DO NOT TOUCH THE LAMP immediately after it has been used. It will be extremely hot. Turn the projector off, wait a full minute, and then disconnect the power cable. Allow at least one hour for the lamp to cool before handling.
- DO NOT REMOVE ANY SCREWS except the lamp cover screw and three lamp case screws. You could receive an electric shock.
- The projector will turn off and go into stand by mode after 2100 (1600 hours : MT1045) hours of service. If this happens, be sure to replace the lamp. If you continue to use the lamp after 2000 hours (1500 hours : MT1045) of use, the lamp bulb may shatter, and pieces of glass may be scattered in the lamp case. Do not touch them as the pieces of glass may cause injury. If this happens, contact your NEC dealer for lamp replacement.

To replace the lamp:

1. Loosen the lamp cover screw until the screwdriver goes into a freewheeling condition and remove the lamp cover. The lamp cover screw is not removable.

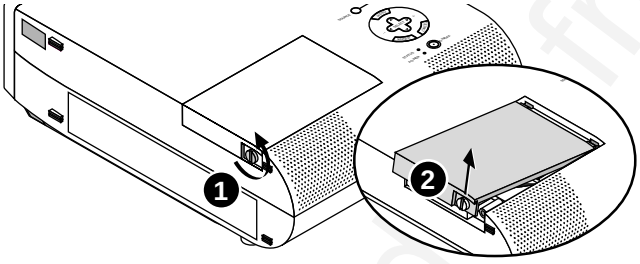

2. Loosen the two screws securing the lamp housing until the screwdriver goes into a freewheeling condition. The three screws are not removable.

   Remove the lamp housing by pulling out the handle.

   NOTE: *There is an interlock on this case to prevent the risk of electrical shock. Do not attempt to circumvent this interlock.*

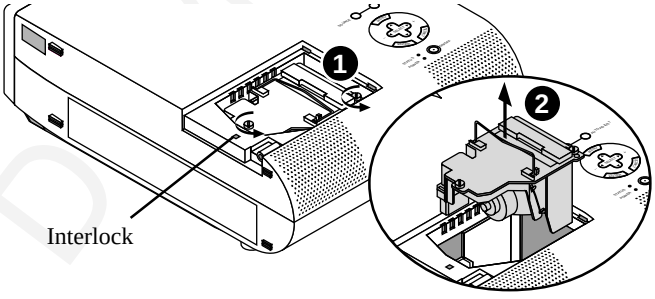

3. Insert a new lamp housing until the lamp housing is plugged into the socket.

   CAUTION: Do not use a lamp other than the NEC replacement lamp (MT40LP).
   Order this from your NEC dealer.

   Secure it in place with the two screws.

   Be sure to tighten the screws.

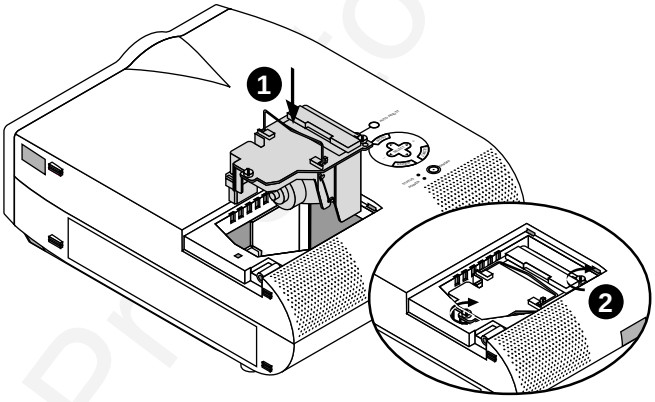

4. Reattach the lamp cover.

   Tighten the lamp cover screw.

   Be sure to tighten the screw.

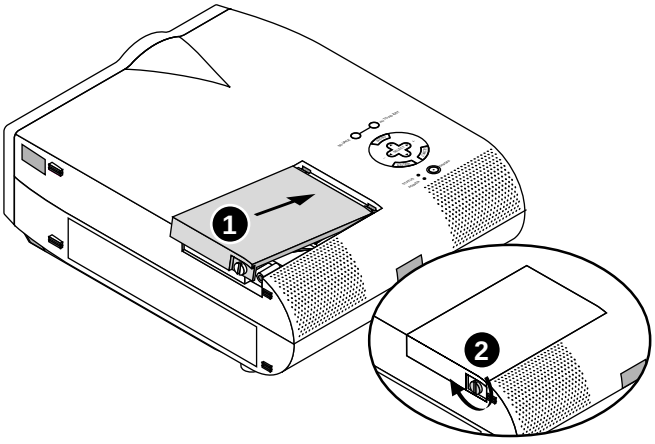

5. After you install a new lamp, select [Main Menu] → [Projector Options] → [Setup]→[Page 2]→[Clear Lamp Hour Meter] to reset the lamp usage hours.

NOTE: *When the lamp exceeds 2100 hours (1600 hours : MT1045) of service, the projector cannot turn on and the message is not displayed. If this happens, press the OFF or Help button on the remote control for a minimum of 10 seconds while in standby mode. When the lamp time clock is reset to zero, the STATUS indicator goes out.*

Remote Control Battery Installation

1. Press firmly and slide the battery cover off.

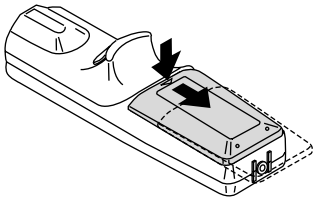

2. Remove both old batteries and install new ones (AA). Ensure that you have the batteries' polarity (+/–) aligned correctly.

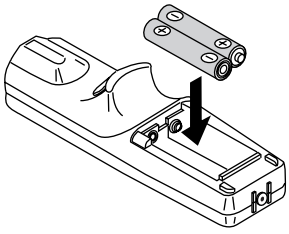

3. Slip the cover back over the batteries until it snaps into place.

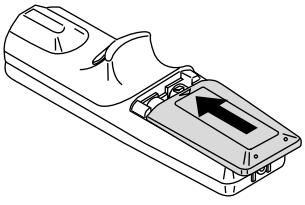

Cleaning or Replacing the Filters

The air-filter sponge keeps the inside of the MultiSync MT840/MT1040/MT1045 Projector free from dust or dirt and should be cleaned after every 100 hours of operation (more often in dusty conditions). If the filter is dirty or clogged, your projector may overheat.

CAUTION

- Turn off the power and unplug the projector before replacing the filter.
- Only clean the outside of the filter cover with a vacuum cleaner.
- Do not attempt to operate the projector without a filter cover.
- Your projector will not operate unless the filter cover is installed correctly.

To clean the air-filter:

Vacuum the filter-through the filter cover.

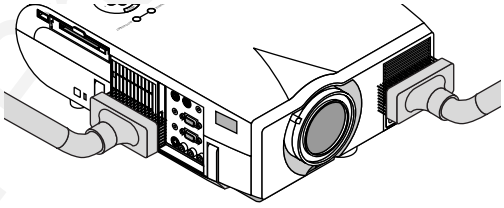

To replace the air-filter:

1. Remove the filter cover by pushing up on the catch of the cover until you feel it detach.

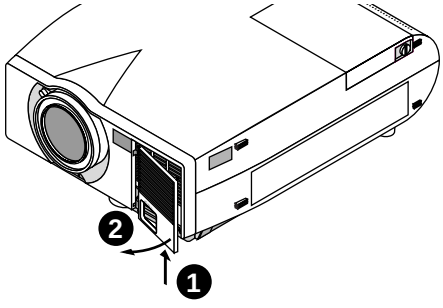

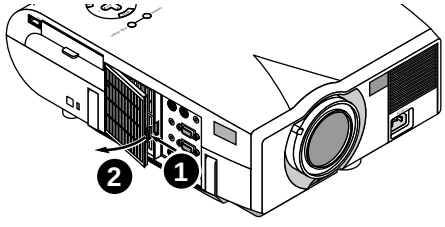

2. Reinstall the new filter cover.

NOTE: *Do not detach the sponge from the filter cover. Do not wash the filter cover with soap and water. Soap and water will damage the the filter membrane. Before replacing the filter cover, remove dust and dirt from the projector cabinet. Keep out dust and during filter replacement.*

Downloaded from Projector.com

5. TROUBLESHOOTING

This section helps you resolve problems you may encounter while setting up or using the projector.

Status Light Messages

Condition	Status
OFF	• Normal
On continually	• The projector lamp has exceeded 2000 hours (1500 hours : MT1045) of operation and should be replaced.
Blinking very rapidly (On and off in a cycle of 1 sec.)	• The lamp cover or filter cover is not fastened properly. Check and reattach it if necessary.
Blinking very rapidly (On and off in a cycle of 4 sec.)	• The temperature protector has been triggerd. If the room temperature is high, move the projector to a cooler location.
Blinking slowly (On and off in a cycle of 8 sec.)	• The cooling fan has stopped. Contact your NEC dealer for service.
Blinking very slowly (On and off in a cycle of 12 sec.)	• The lamp is not turned on. The projector was turned off and back on too quickly. Turn off the projector, wait one minute, then turn the projector back on. Or the lamp is burnt out.

Common Problems & Solutions

Problem	Check These Items
Does not turn on	• Check that the power cable is plugged in and that the power button on the projector cabinet or the remote control is on. • Ensure that the lamp cover is installed correctly. See page E-33. • Check to see if the projector has overheated or the lamp usage exceeds 2100 hours (1600 hours : MT1045). If there is insufficient ventilation around the projector or if the room where you're presenting is particularly warm, move the projector to a cooler location.
No picture	• Use the menu to select your source (Video, S-Video, RGB or PC Card Viewer). See page E-20. • Ensure your cables are connected properly. • Use menus to adjust the brightness and contrast. See page E-20 • Remove the lens cap. • Reset the settings or adjustments to factory preset levels using the Factory Default in the Adjustment Menu. See page E-21
Image isn't square to the screen	• Reposition the projector to improve its angle to the screen. See page E-12 • Use the Keystone in the Adjustment Menu to correct the trapezoid distortion. See page E-21
Picture is blurred	• Adjust the focus. See page E-12 or E-17. • Reposition the projector to improve its angle to the screen. See page E-12 • Ensure that the distance between the projector and screen is within the adjustment range of the lens. See page E-13
Image is scrolling vertically, horizontally or both	• Use menus or Source button on the remote control or the cabinet to select the source you want to input.
Remote control does not work	• Install new batteries. See page E-34. • Make sure there are no obstacles between you and the projector. • Stand within 22 feet (7 m) of the projector. See page E-34. • Make sure that you are in the Projector mode or the Computer/Projector Select button lights in red. If not, press the Computer/Projector Select button.
Status indicator is lit or blinking	• See the Status Light messages above.
Cross color in RGB mode	• If Auto Adjust is off, turn it on. If Auto Adjust is on, turn it off and balance the image with the Position and Pixel Adjust in the Adjustments Menu. See page E-21.

Downloaded from Projector.com

When using the PC Card Viewer function

Condition	Status
No picture	• Is “PC Card Viewer” selected from the Source menu? • Is the PC memory card seated in the PC CARD ACCESS slot completely? • Are slide data stored in the PC card? • Have the contents of the PC card been destroyed?
Part of a slide is not displayed	• While an image with over 1024×768 dots is projected, several lines of information will be lost. Use the supplied software change the image to 1024×768 dots in size.
Contents of PC Card are damaged	• Areas of slides exceeding 1024×768 (MT840: 800×600 dots) cannot be displayed. Use the PC Card Viewer software, etc., to change the image size to 1024×768 dots (MT840: 800×600 dots). In addition, the displayable image size differs according to the resolution of the projector. Use the PC Card Viewer software, etc., to change the image size. Note that on MT840 JPEG images exceeding 800×600 dots are scaled down to three-quarters of its original size. Example: a JPEG image exceeding 1024×768 dots is displayed in 768 (=1024×3/4)×576 (=768×3/4) dots. • Use a computer, etc., to repair the data.

For more information contact your dealer.

Downloaded from Projector.com

6. SPECIFICATIONS

This section provides technical information about the MultiSync MT840/MT1040/MT1045 Projector's performance.

Model Number MT840E / MT1040E / MT1045E

Optical

LCD Panel	1.3" p-Si TFT active-matrix, 800×600 dots (MT840) / 1024×768 dots (MT1040/MT1045)
	1.3" p-Si TFT active-matrix with Micro Lens Array (MT1045)
Lens	Manual zoom, manual focus
	MT840/MT1040 : F2.3 – 2.7 f=48.6 – 58.4 mm
	MT1045 : F1.8 – 2.2 f=49.3 – 59.3 mm
Lamp	MT840/MT1040 : 180W NSH lamp / MT1045 : 200W NSH lamp
Image Size	30 – 300 inches (762 – 7620 mm) diagonal
Projection Distance	MT840/MT1040 : 4.3 – 36.7 ft (1.3 - 11.2 m)
	MT1045 : 4.3 – 37.1 ft (1.3 - 11.3 m)

Electrical

Inputs	Video (NTSC / PAL / PAL60 / SECAM / NTSC4.43)
	Horizontal Frequency : 15 – 85 kHz (RGB : 24 kHz or over)
	Vertical Frequency : 50 – 85 Hz
Video Bandwidth	RGB: 80 MHz
Color	Reproduction Full color, 16.7 million colors simultaneously.
Horizontal Resolution	550 TV lines : NTSC / PAL / NTSC4.43 / YCbCr
	350 TV lines : SECAM
	RGB MT840 : 800 dots horizontal, 600 dots vertical
	MT1040/MT1045 : 1024 dots horizontal, 768 dots vertical
Power Requirement	100 – 120 / 200 – 240 VAC, 50 / 60 Hz
Input Current	3.5 A (100 – 120 VAC) / 1.7A (200 – 240 VAC)

Mechanical

Dimensions	MT840/MT1040 : 11.1" (W)×4.8" (H)×14.3" (D) / 281mm (W)×121mm (H)×364mm (D) (not including lens and feet)
	MT1045 : 11.1" (W)×4.8" (H)×14.9" (D) / 281mm (W)×121mm (H)×376mm (D) (not including lens and feet)
Net Weight	MT840/MT1040 : 12.4 lbs / 5.6 kg
	MT1045 : 12.8 lbs / 5.8 kg
Environmental Considerations	Operational Temperatures: 32° – 104°F (0° to 40°C), 20 – 80% humidity
	Storage Temperatures: 14° – 140°F (-10° to 60°C), 30 – 85% humidity
Regulations	UL Approved (UL 1950, CSA 950)
	Meets DOC Canada requirements
	Meets FCC Class A requirements
	Meets AS/NZS3548
	Meets EMC Directive (EN55022, EN55082-1, EN61000-3-2, EN61000-3-3)
	Meets Low Voltage Directive (EN60950, TUV GS Approved)
	CE

The specifications are subject to change without notice.

Downloaded from Projector.com

Cabinet Dimensions

MT840/MT1040

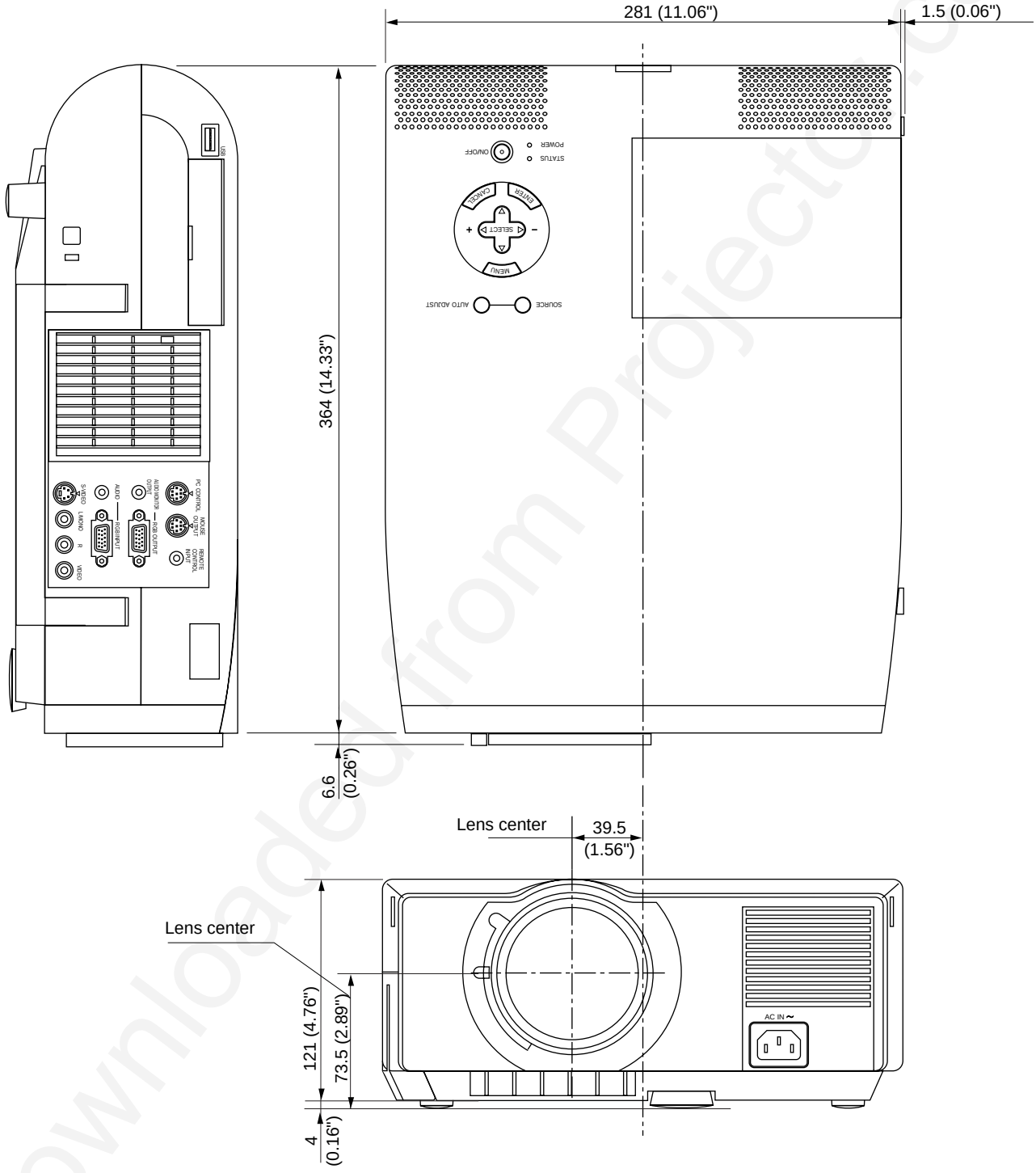

Unit = mm (inch)

Downloaded from Projecto.com

MT1045

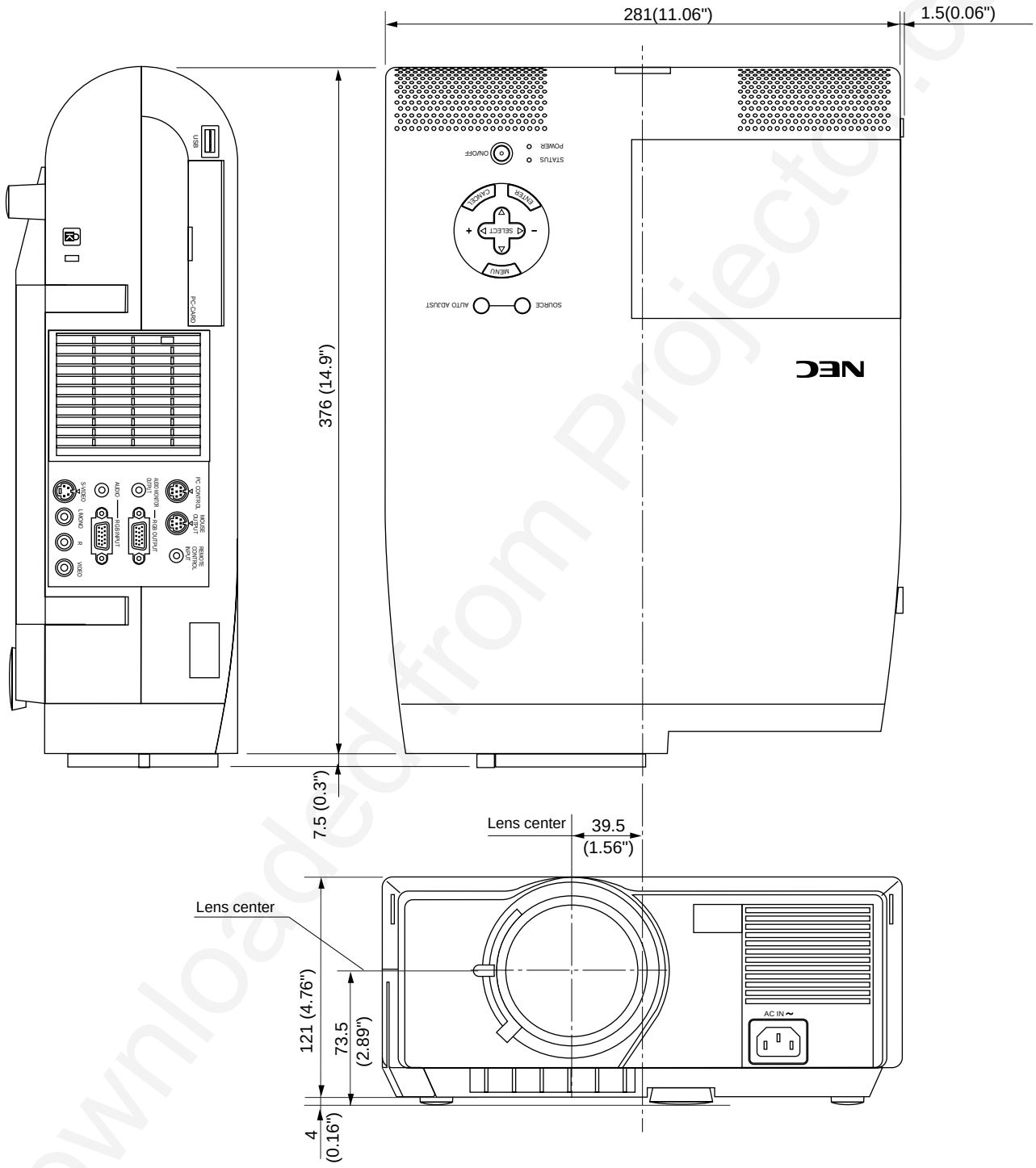

Unit = mm (inch)

Downloaded from Projecto.com

D-Sub Pin Assignments

Mini D-Sub 15 Pin Connector

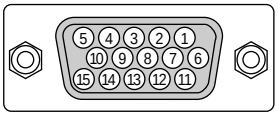

Signal Level
Video signal : 0.7Vp-p (Analog)
Sync signal : TTL level

Pin No.	RGB Signal (Analog)	YCbCr Signal
1	Red	Cr
2	Green or Sync on Green	Y
3	Blue	Cb
4	Ground	
5	Ground	
6	Red Ground	Cr Ground
7	Green Ground	Y Ground
8	Blue Ground	Cb Ground
9	No Connection	
10	Sync Signal Ground	
11	Ground	
12	Bi-directional DATA (SDA)	
13	Horizontal Sync or Composite Sync	
14	Vertical Sync	
15	Data Clock	

Downloaded from Projector.com

Timing Chart

Y / N	Signal	Resolution (Dots)	Refresh Rate (Hz)	Frequency H. (kHz)	Dot Clock (MHz)
Y	NTSC	640 × 480	60	15.734	-
Y	PAL	768 × 576	50	15.625	-
Y	SECAM	768 × 576	50	15.625	-
Y	VESA	640 × 350	85.08	37.86	31.5
Y	MAC	640 × 400	66	35	30.24
Y	IBM	640 × 400	70	31.47	25.175
Y	VESA	640 × 400	85.08	37.86	31.5
Y	VESA	640 × 480	59.94	31.47	25.175
Y	IBM	640 × 480	60	31.47	25.175
Y	MAC	640 × 480	60	31.47	25.175
Y	MAC	640 × 480	66.67	34.97	31.334
Y	MAC	640 × 480	66.67	35	30.24
Y	VESA	640 × 480	72.81	37.86	31.5
Y	VESA	640 × 480	75	37.5	31.5
Y	IBM	640 × 480	75	39.375	31.49
Y	VESA	640 × 480	85.01	43.269	36
Y	IBM	720 × 350	70.09	31.469	28.322
Y	VESA	720 × 400	85.04	37.927	35.5
Y	IBM	720 × 350	87.85	39.44	35.5
Y	IBM	720 × 400	87.7	39.375	35.5
Y	VESA	800 × 600	56.25	35.16	36
Y	VESA	800 × 600	60.32	37.879	40
Y	VESA	800 × 600	72.19	48.077	50
Y	VESA	800 × 600	75	46.88	49.5
Y	VESA	800 × 600	85.06	53.674	56.25
#Y	MAC	832 × 624	74.55	49.725	57.283
#Y	VESA	1024 × 768	43 Interlaced	35.5	44.9
#Y	VESA	1024 × 768	60	48.363	65
#Y	VESA	1024 × 768	70.07	57.476	75
#Y	IBM	1024 × 768	72.03	58.131	79
#Y	MAC	1024 × 768	74.93	60.241	80
#Y	VESA	1024 × 768	75.03	60.023	78.75
#Y	VESA	1024 × 768	85	68.677	94.5
##Y	VESA	1152 × 864	75	67.5	108
##Y	MAC	1152 × 870	75.06	68.681	100
##Y	SUN	1152 × 900	65.95	61.796	92.94
##Y	SGI	1152 × 900	76.05	71.736	105.6
##Y	VESA	1280 × 960	60	60	108
##Y	SGI	1280 × 1024	60	63.9	107.35
##Y	VESA	1280 × 1024	60.02	63.981	108
##Y	MAC	1280 × 1024	60.38	64.31	107
##Y	MAC	1280 × 1024	65.2	69.9	118.5
##Y	HP	1280 × 1024	72.01	78.125	135
##Y	SUN	1280 × 1024	76.11	81.13	135
##Y	VESA	1280 × 1024	75.03	79.976	135
##Y	VESA	1280 × 1024	85.02	91.146	157.5

#Y: Images in above flagged with # and Y are compressed with Advanced AccuBlend on MT840.
##Y: Images in above flagged with ## and Y are compressed with Advanced AccuBlend on MT1040 / MT1045.

NOTE: *Some composite sync signals may not be displayed correctly.*

Downloaded from Projector.com

PC Control Codes

Function	Code Data
POWER ON	02H 00H 00H 00H 00H 02H
POWER OFF	02H 01H 00H 00H 00H 03H
INPUT SELECT RGB	02H 03H 00H 00H 02H 01H 01H 09H
INPUT SELECT VIDEO	02H 03H 00H 00H 02H 01H 06H 0EH
INPUT SELECT S-VIDEO	02H 03H 00H 00H 02H 01H 0BH 13H
INPUT SELECT PC CARD VIEWER	02H 03H 00H 00H 02H 01H 1FH 27H
PICTURE MUTE ON	02H 10H 00H 00H 00H 12H
PICTURE MUTE OFF	02H 11H 00H 00H 00H 13H
SOUND MUTE ON	02H 12H 00H 00H 00H 14H
SOUND MUTE OFF	02H 13H 00H 00H 00H 15H
ON SCREEN MUTE ON	02H 14H 00H 00H 00H 16H
ON SCREEN MUTE OFF	02H 15H 00H 00H 00H 17H

NOTE: *Contact your local dealer for a full list of the PC Control Codes if needed.*

Cable Connection

Communication Protocol

Baud rate:	**38400 bps**
Data length:	**8 bits**
Parity:	**No parity**
Stop bit:	**One bit**
X on/off:	**None**
Communications procedure:	**Full duplex**

PC Control Connector (DIN-8P)

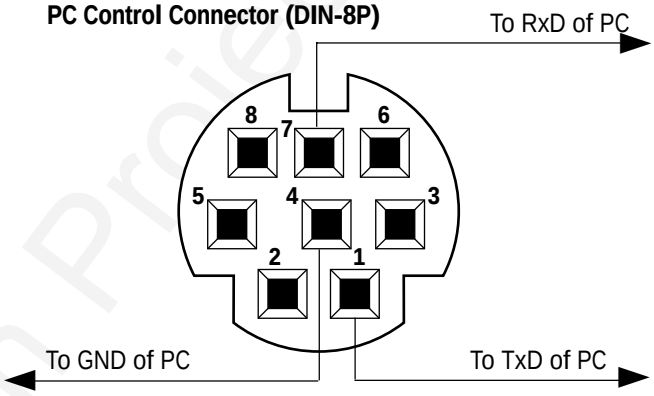

NOTE: *Pins 2, 3, 5, 6 and 8 are used inside the projector.*

Downloaded from Projector.com