Ultra-Portable Projector

MultiSync® LT 81™/100™

Projector
User's Manual

NEC
NEC Technologies

NEC Technologies, Inc.
1250 N. Arlington Heights Road, Suite 500
Itasca, Illinois 60143-1248

Part No. 7840994 2
Printed in Japan

Ultra-Portable Projector

Precautions

Please read this manual carefully before using your NEC MultiSync LT81/LT100 Projector and keep the manual handy for future reference.

Your serial number is located beneath the main power switch on the back of your MultiSync LT81/LT100. Record it here:

⚠ CAUTION

To turn off main power, be sure to remove the plug from power outlet. The power outlet socket should be installed as near to the equipment as possible, and should be easily accessible.

LT100 Remote Control

CAUTION

LASER RADIATION-
DO NOT STARE INTO BEAM

WAVE LENGTH: 670 nm
MAX. OUTPUT: 1 mW
CLASS II LASER PRODUCT

LT81 Remote Control

CAUTION

LASER RADIATION-
DO NOT STARE INTO BEAM

WAVE LENGTH: 645 nm (640-660 nm)
MAX. OUTPUT: 1 mW
CLASS II LASER PRODUCT

⚠ CAUTION

TO PREVENT SHOCK, DO NOT OPEN THE CABINET. NO USER-SERVICEABLE PARTS INSIDE. REFER SERVICING TO QUALIFIED NEC SERVICE PERSONNEL.

This symbol warns the user that uninsulated voltage within the unit may be sufficient to cause electrical shock. Therefore, it is dangerous to make any kind of contact with any part inside of the unit.

This symbol alerts the user that important information concerning the operation and maintenance of this unit has been provided. The information should be read carefully to avoid problems.

WARNING

TO PREVENT FIRE OR SHOCK, DO NOT EXPOSE THIS UNIT TO RAIN OR MOISTURE. DO NOT USE THIS UNIT'S GROUNDED PLUG WITH AN EXTENSION CORD OR IN AN OUTLET UNLESS ALL THREE PRONGS CAN BE FULLY INSERTED. DO NOT OPEN THE CABINET. THERE ARE HIGH-VOLTAGE COMPONENTS INSIDE. ALL SERVICING MUST BE DONE BY QUALIFIED NEC SERVICE PERSONNEL.

DOC Compliance Notice

This Class A digital apparatus meets all requirements of the Canadian Interference-Causing Equipment Regulations.

RF Interference

WARNING

The Federal Communications Commission does not allow any modifications or changes to the unit EXCEPT those specified by NEC Technologies in this manual. Failure to comply with this government regulation could void your right to operate this equipment.

This equipment has been tested and found to comply with the limits for a Class A digital device, pursuant to Part 15 of the FCC Rules. These limits are designed to provide reasonable protection against harmful interference in a commercial installation. This equipment generates, uses and can radiate radio frequency energy and, if not installed and used in accordance with the instructions, may cause harmful interference to radio communications. Operation of this equipment in a residential area is likely to cause harmful interference in which case the user will be required to correct the interference at their own expense.

Important Safeguards

These safety instructions are to ensure the long life of your projector and to prevent fire and shock. Please read them carefully and heed all warnings.

Installation

1. For best results, use your projector in a darkened room.
2. Place the projector on a flat, level surface in a dry area away from dust and moisture.
3. Do not place your projector in direct sunlight, near heaters or heat radiating appliances.
4. Exposure to direct sunlight, smoke or steam can harm internal components.
5. Handle your projector carefully. Dropping or jarring can damage internal components.
6. Do not place heavy objects on top of the projector.
7. If installing the projector on the ceiling:
   a. The ceiling must be strong enough to support the projector and the installation must be in accordance with any local building codes.
   b. The projector must be installed by qualified NEC service personnel.

Power Supply

1. The projector is designed to operate on a power supply of 100-120 or 220-240 V 50/60 Hz AC. Ensure that your power supply fits this requirement before attempting to use your projector.
2. Handle the power cable carefully and avoid excessive bending. A damaged cord can cause electric shock or fire.
3. If the projector is not to be used for an extended period of time, disconnect the plug from the power outlet.

Cleaning

1. Unplug the projector before cleaning.
2. Clean the cabinet periodically with a damp cloth. If heavily soiled, use a mild detergent. Never use strong detergents or solvents such as alcohol or thinner.
3. Use a blower or lens paper to clean the lens, and be careful not to scratch or mar the lens.

Lamp Replacement

- Perform lamp replacement in accordance with the instructions on page 81.
- Be sure to replace the lamp when the Status light comes on. If you continue to use the lamp after 1000 hours of use, the lamp bulb may shatter, and pieces of glass may be scattered in the lamp case. Do not touch them as the pieces of glass may cause injury. If this happens, contact your NEC dealer for lamp replacement.
- Allow a minimum of ONE minute to elapse between turning the lamp off and on. High voltage is applied to the lamp immediately when the power is turned on. Therefore turning the power off and quickly back on may shorten the life of your lamp and result in damage to your projector.

Fire and Shock Precautions

1. Ensure that there is sufficient ventilation and that vents are unobstructed to prevent the build-up of heat inside your projector. Allow at least 3 inches (10cm) of space between your projector and a wall.
2. Prevent foreign objects such as paper clips and bits of paper from falling into your projector. Do not attempt to retrieve any objects that might fall into your projector. Do not insert any metal objects such as a wire or screwdriver into your project. If something should fall into your projector, disconnect it immediately and have the object removed by a qualified NEC service person.
3. Do not place any liquids on top of your projector.

- **Do not look into the lens while the projector is on. Serious damage to your eyes could result.**
- **Do not look into the laser pointer while it is on and do not point the laser beam at another person. Serious injury could result.**

⚠ ATTENTION

RISQUE D'ELECTROCUTION NE PAS OUVRIR

⚠ ATTENTION

Pour couper l'alimentation principale, s'assurer de retirer la fiche de la prise de courant.
La prise de courant murale doit être installée le plus près possible de l'équipement, et doit être facilement accessible.

Télécommande LT100

ATTENTION

RAYONNEMENT LASER NE PAS REGARDER DANS LE FAISCEAU

LONGUEUR D'ONDE: 670 nm
MAX. SORTIE: 1 mW
APPREIL A LASER DE CLASSE 2

Télécommande LT81

ATTENTION

RAYONNEMENT LASER NE PAS REGARDER DANS LE FAISCEAU

LONGUEUR D'ONDE: 645 nm (640-660 nm)
MAX. SORTIE: 1 mW
APPREIL A LASER DE CLASSE 2

Ce symbole a pour but de prévenir l'utilisateur de la présence d'une tension dangereuse, non isolée se trouvant à l'intérieur de l'appareil. Elle est d'une intensité suffisante pour constituer un risque d'électrocution. Eviter le contact avec les pièces à l'intérieur de cet appareil.

Ce symbole a pour but de prévenir l'utilisateur de la présence d'importantes instructions concernant l'entretien et le fonctionnement de cet appareil. Par conséquent, elles doivent être lues attentivement afin d'éviter des problèmes.

⚠ AVERTISSEMENT

AFIN DE REDUIRE LES RISQUES D'INCENDIE OU D'ELECTROCUTION, NE PAS EXPOSER CET APPAREIL A LA PLUIE OU A L'HUMIDITE. AUSSI, NE PAS UTILISER LA FICHE POLARISEE AVEC UN PROLONGATEUR OU UNE AUTRE PRISE DE COURANT SAUF SI CES LAMES PEUVENT ETRE INSEREES A FOND. NE PAS OUVRIR LE COFFRET, DES COMPOSANTES HAUTE TENSION SE TROUVENT A L'INTERIEUR. LAISSER A UN PERSONNEL QUALIFIE LE SOIN DE REPARER CET APPAREIL.

DOC avis de conformation

DOC avis de conformation

Cet appareil numérique de la classe A respecte toutes les exigences du Règlement sur le Matériel Brouilleur du Canada.

Importantes précautions de sécurité

Les points suivants sont des précautions de sécurité importantes destinées à garantir une longue durée de service du projecteur et afin d'éviter un incendie et des risques d'électrocution. S'assurer de lire attentivement ces précautions de sécurité et respecter tous les avertissements décrits ci-dessous.

Installation

1. Pour un fonctionnement optimal, utiliser le projecteur dans une pièce sombre.
2. Placer le projecteur sur une surface à niveau et dans un endroit sec exempt de poussières et d'humidité.
3. Ne pas placer le projecteur en plein soleil, près d'appareils ménagers ou d'autres appareils de chauffage.

4. La fumée, la vapeur et l'exposition aux rayons directs du soleil risquent de détériorer sérieusement les composantes internes.
5. Eviter des manipulations brusques lors du déplacement du projecteur, car un choc violent pourrait endommager les composantes internes.
6. Ne pas deposer d'objets lourds sur le dessus du projecteur.
7. Lors de l'installation du projecteur au plafond, respecter les instructions suivantes.
   a. Le plafond doit être suffisamment solide pour supporter le poids du projecteur et il doit être installé selon les codes de construction locaux.
   b. Le projecteur doit être installé par un personnel qualifié.

Alimentation

1. Le projecteur est conçu pour fonctionner à 100-120 ou 220-240VCA 50/60Hz. S'assurer que la tension d'alimentation locale satisfait cette exigence avant d'utiliser le projecteur.
2. Manipuler le câble d'alimentation avec précaution et éviter de le plier excessivement. Un cordon endommagé risque de provoquer une électrocution ou un incendie.
3. Si le projecteur n'est pas utilisé pendant une période prolongée, retirer la fiche de la prise secteur.

Nettoyage

1. Débrancher le projecteur de la prise d'alimentation avant le nettoyage.
2. Nettoyer régulièrement le coffret avec un chiffon doux. S'il y a des taches tenaces, utiliser une solution d'un détergent doux. Ne jamais utiliser de détergents puissants ou des solvants, tel que l'alcool ou un diluant pour nettoyer le projecteur.
3. Utiliser un appareil diffuseur chauffant ou du papier de nettoyage de lentille disponible dans le commerce pour nettoyer la lentille.

   Ne pas frapper ou rayer la surface de la lentille, car des défauts risquent de se produire sur la surface de la lentille.

Remplacement de la lampe

- Effectuer le remplacement de la lampe suivant les instructions de la page 85.
- Assurez-vous de bien remplacer la lampe lorsque le voyant d'usure s'allume. Si vous continuez d'utiliser la lampe après 1000 heures d'utilisation, l'ampoule peut se briser et des brisures de verre peuvent être éparpillées dans le compartiment de la lampe. Ne les touchez pas car elles peuvent vous blesser. Dans ce cas, contactez votre revendeur NEC afin de procéder au remplacement de la lampe.
- Attendez minimum UNE minute après avoir éteint la lampe avant de la rallumer. Une haute tension est immédiatement appliquée à la lampe quand celle-ci est mise sous tension. Par conséquent, éteindre, puis tout de suite rallumer peut abréger la vie de votre lampe et endommager votre projecteur.

Précautions pour éviter un incendie ou une électrocution

1. Une ventilation appropriée doit être assurée afin d'éviter une accumulation de chaleur à l'intérieur du projecteur. S'assurer que les trous de ventilation ne sont pas obstrués. Laisser un espace d'au moins 10 cm (quatre pouces) entre le projecteur et les murs.
2. Eviter que des objets étrangers, des agrafes, des clous et du papier, par exemple, pénètrent à l'intérieur du projecteur. Ne pas essayer de récupérer ces objets soi-même ou ne pas insérer des objets métalliques, des fils et des tourne-vis, par exemple à l'intérieur du projecteur. Si un objet tombe à l'intérieur du projecteur, le débrancher immédiatement et contacter un dépanneur qualifié pour retirer l'objet.
3. Ne pas placer des liquides sur le dessus du projecteur.

- **Ne regardez pas à l'intérieur de l'objectif lorsque le projecteur est en marche. Vous risquez de vous blesser gravement aux yeux.**
- **Ne regardez pas à l'intérieur de la flèche laser lorsque celle-ci est en marche et ne dirigez pas le rayon laser sur une autre personne. Vous risquez de provoquer ue blessure grave.**

NEC MultiSync® Projector Products

NEC Technologies, Inc. (hereafter NECTECH) warrants this product to be free from defects in material and workmanship under the following terms.

HOW LONG IS THE WARRANTY?

Parts and labor are warranted for (2) two years from the date of the first customer purchase. The lamp is warranted for 1000 hours of operating time or six months, whichever comes first.

WHO IS PROTECTED?

This warranty may be enforced only by the first purchaser.

WHAT IS COVERED AND WHAT IS NOT COVERED

Except as specified below, this warranty covers all defects in material or workmanship in this product. The following are not covered by the warranty:

1. Any product which is not distributed in the U.S.A. or Canada by NECTECH or which is not purchased in the U.S.A. or Canada from an authorized NECTECH dealer. For a listing of authorized dealers please contact NECTECH at 800-836-0655.
2. Costs of initial technical adjustments (set-up), including adjustment of user controls. These costs are the responsibility of the NECTECH dealer from whom the product was purchased.
3. Payment of shipping charges.

HOW YOU CAN GET WARRANTY SERVICE

1. To obtain service on your product, consult the dealer from whom you purchased the product.
2. Whenever warranty service is required, the original dated invoice (or a copy) must be presented as proof of warranty coverage. Please be prepared to describe or demonstrate the problem to your dealer.
3. For the name of the nearest NECTECH authorized service center, call NECTECH at 800-836-0655.

LIMITATION OF IMPLIED WARRANTIES

ALL IMPLIED WARRANTIES, INCLUDING WARRANTIES OF MERCHANTABILITY AND FITNESS FOR A PARTICULAR PURPOSE, ARE LIMITED IN DURATION TO THE LENGTH OF THIS WARRANTY.

EXCLUSION OF DAMAGES

NECTECH'S LIABILITY FOR ANY DEFECTIVE PRODUCT IS LIMITED TO THE REPAIR OR REPLACEMENT OF THE PRODUCT AT OUR OPTION. NECTECH SHALL NOT BE LIABLE FOR:

2. Any product on which the serial number has been defaced, modified or removed. NECTECH'S LIABILITY FOR ANY DEFECTIVE PRODUCT IS LIMITED TO THE REPAIR OR REPLACEMENT OF THE PRODUCT AT OUR OPTION. REPLACEMENT PRODUCTS MAY BE NEW OR 'LIKE NEW'.
3. NECTECH SHALL NOT BE LIABLE FOR : Damage, deterioration or malfunction resulting from:
   a. Accident, misuse, abuse, neglect, fire, water, lightning or other acts of nature, unauthorized product modification, or failure to follow instructions supplied with the product.
   b. Repair or attempted repair by anyone not authorized by NECTECH.
   c. Any shipment of the product (claims must be presented to the carrier).
   d. Removal or installation of the product.
   e. Any other cause which does not relate to a product defect.
4. Cartons, carrying cases, batteries, external cabinets, magnetic tapes, or any accessories used in connection with the product.

WHAT NEC WILL COVER

We will pay labor and material expenses for covered items. But we will not pay for the following:

1. Removal or installation charges.

1. DAMAGE TO OTHER PROPERTY CAUSED BY ANY DEFECTS IN THIS PRODUCT, DAMAGES BASED UPON INCONVENIENCE, LOSS OF USE OF THE PRODUCT, LOSS OF TIME, COMMERCIAL LOSS; OR
2. ANY OTHER DAMAGES, WHETHER INCIDENTAL, CONSEQUENTIAL OR OTHERWISE. SOME STATES DO NOT ALLOW LIMITATIONS ON HOW LONG AN IMPLIED WARRANTY LASTS AND/OR DO NOT ALLOW THE EXCLUSION OR LIMITATION OF INCIDENTAL OR CONSEQUENTIAL DAMAGES, SO THE ABOVE LIMITATIONS AND EXCLUSIONS MAY NOT APPLY TO YOU.

HOW STATE LAW RELATES TO THE WARRANTY

This warranty gives you specific legal rights, and you may also have other rights which vary from state to state.

FOR MORE INFORMATION, TELEPHONE 800-366-5213

NEC TECHNOLOGIES, INC.
1250 N. Arlington Heights Road, Suite 500
Itasca, Illinois 60143-1248

NOTE: *All products returned to NECTECH for service MUST have prior approval. To get approval, call NEC Technologies at 800-836-0655.*

1. Introduction

Introduction To The MultiSync LT81/LT100 Projector 13
How Do You Get Started? 15
What's In The Box? 15
Getting To Know Your MultiSync LT81/LT100 Projector 17
Front Features 17
Rear Features 18
Top Features 19
Terminal Panel Features 21
Remote Control Features 25

2. Installation

Setting Up Your MultiSync LT81/LT100 Projector 29
Selecting A Location 30
Projection Distance 31
Using A Tabletop Or Cart 35
Transporting And Storing The Projector 37
Ceiling Installation 41
Wiring Diagram 43
Connecting Your PC Or Macintosh Computer 45
Connecting Your DVD Player 51
Connecting Your Document Camera 51
Connecting Your VCR Or Laser Disc Player 52
Connecting An External Monitor 52
Connecting Your Remote Mouse Receiver 53

3. Operation

General Controls 57
Using The Menus 59
Menu Descriptions & Functions 61
Source Menu (Source Icons) 61
Image Adjust Menu(Sound And Picture Control Icons) 63
Power Menu(Projector Control Icons) 67
Settings Menu(Maintenance Icons) 69
Using the Viewer Function 71

4. Maintenance

Replacing The Lamp 81
Remote Control Battery Installation 83
Operating Range 84

5. Troubleshooting

Status Light Messages 89
Common Problems & Solutions 91

6. Specifications

Optical / Electrical / Mechanical 93
Cabinet Dimensions 95
D-Sub Pin Assignments 99
Timing Chart 101
PC Control Command Reference 103
Cable Connection 107

This section introduces you to your new MultiSync LT81 (SVGA)/ LT100 (XGA) Projector, provides a list of materials that comes with your projector and describes the features and controls.

Congratulations On Your Purchase Of The MultiSync LT81/LT100 Projector

The MultiSync LT81/LT100 is one of the very best projectors available today. The MultiSync LT81/LT100 enables you to project precise images up to 300 inches across (measured diagonally) from your PC or Macintosh computer (desktop or notebook), VCR, DVD player, document camera, or even a laser disc player.

You can use the projector on a tabletop or cart, you can permanently mount it on a ceiling*1, or you can use MultiSync LT81/LT100 Projector to project images from behind the screen. The remote control can be used wirelessly or with a cable (only the LT100 can be connected with a cable), and you can even use the remote control with the built-in remote mouse receiver to operate the mouse on your PC or Mac.

Features you'll enjoy:

- Simple set up and operation.
- A high-performance 280 watt metal halide lamp that delivers a high bright image, allowing you to make presentations with the lights on.
- A wireless remote control that operates the projector from any angle.
- A laser pointer that' s built into the remote control.
- The manual zoom control enables you to adjust the image to be between 24 and 300 inches (measured diagonally).
- White balance control allows you to adjust the brightness and contrast for each RGB color.
- You can choose between video modes depending on your source: "normal" for a typical picture, "natural" for true color reproduction, and "camera" for use with a document camera or low APL picture.
- The optional LT Viewer kit allows you to start your presentation even when a PC is not available at the site.
- The "image capture" enables you to use the entire picture as a background image or to create slides (optional LT Viewer required).
- An image can be projected from in front or behind a screen, and the projector can even be installed on the ceiling.
- NEC Technologies' exclusive AccuBlend™ intelligent pixel blending technology - an extremely accurate image compression technology - offers a crisp image with SXGA (1280×1024) resolution*2 .
- Supports most IBM VGA, SVGA, XGA*3, SXGA(with AccuBlend™)*2 , Macintosh, or any other RGB signals within a horizontal frequency range of 15.754 to 85 kHz (60 kHz : LT81) and a vertical frequency range of 50 to 85 Hz. This includes NTSC, PAL, SECAM and NTSC4.43 standard video signals.

Note: *Composite video standards are as follows:*

NTSC:	*U.S. TV standard for video in U.S. and Canada.*
PAL:	*TV standard used in western Europe.*
SECAM:	*TV standard used in France and Eastern Europe.*
NTSC4.43:	*TV standard used in Middle East countries.*

- Accepts component video source such as DVD player with the Y/ Cb/Cr output.
- The remote control can be used with (LT100 only) or without a cable, and you can even use the remote to operate your PC or Macintosh mouse wirelessly from across the room with the built-in remote mouse receiver.
- You can control your MultiSync LT81/LT100 Projector with a PC.
- The contemporary cabinet design is compact, easy to carry, and complements any office, board room or auditorium.

*1 Installing the MultiSync LT81/LT100 LCD Projector on the ceiling must be done by authorized NEC technicians. Consult your NEC dealer for more information.

*2 An SXGA image (1280×1024) is converted into a 1024×768 crisp image with NEC technology's AccuBlend on LT100.

*3 An XGA image (1024×768) is converted into an 800×600 crisp image with NEC technology's AccuBlend.

How Do You Get Started?

The fastest way to get started is to take your time and do everything right the first time. Take a few minutes now to click through the training CD-ROM and review the user's manual. This may save you hours later on. At the beginning of each section of the manual you'll find an overview. If the section doesn't apply, you can skip it.

What's In The Box?

Make sure your box contains everything listed. If any pieces are missing, contact your dealer. Please save the original box and packing materials if you ever need to ship your MultiSync LT81/LT100 Projector.

- NEC MultiSync LT81/LT100 Projector
- Carrying Case
- Remote Control With Built-In Laser Pointer
- Remote Cable (LT100 only)
- Remote Control Case
- Remote Mouse Receiver
- Signal Cable (15-Pin Mini D-Sub To 15-Pin Mini D-Sub Connector)
- Mouse Adapters for IBM PS/2 and Mac
- Serial Cable
- Pin Adapter for Macintosh
- Power Cable
- Two AA Batteries
- Introductory / Training CD-ROM
- User's Manual
- Registration Card
- Quick Connect Guide

Remote control

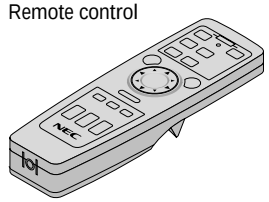

Mouse adapter (For IBM PS/2)

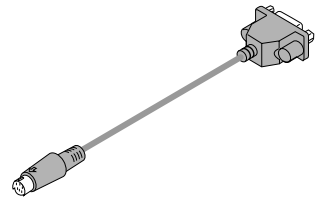

Remote control case

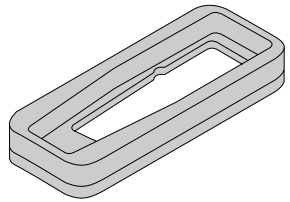

Mouse adapter (For Macintosh)

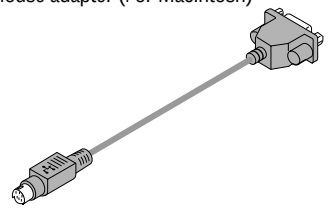

Batteries (AA × 2)

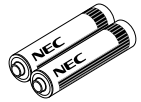

Remote mouse receiver

Pin adapter for Macintosh

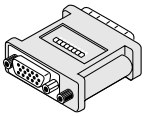

Power cable

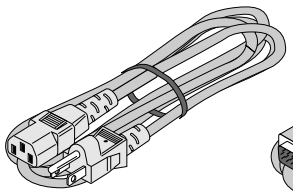

Signal cable (15-Pin Mini D-Sub To 15-Pin Mini D-Sub connector)

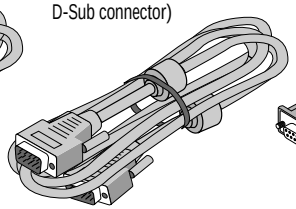

Serial cable

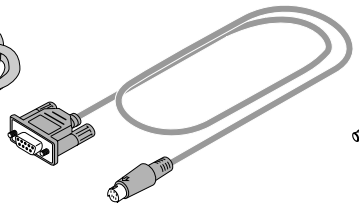

Remote Cable (LT100 only)

Carrying case for LT100

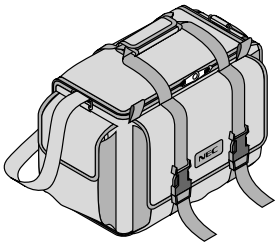

Introductory / Training CD-ROM

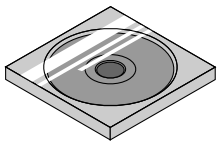

User's manual

Registration card

Quick Connect Guide

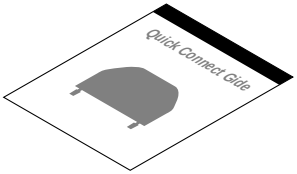

Carrying case for LT81

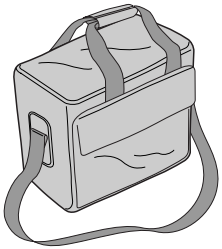

Getting To Know Your MultiSync LT81/LT100 Projector

Front Features

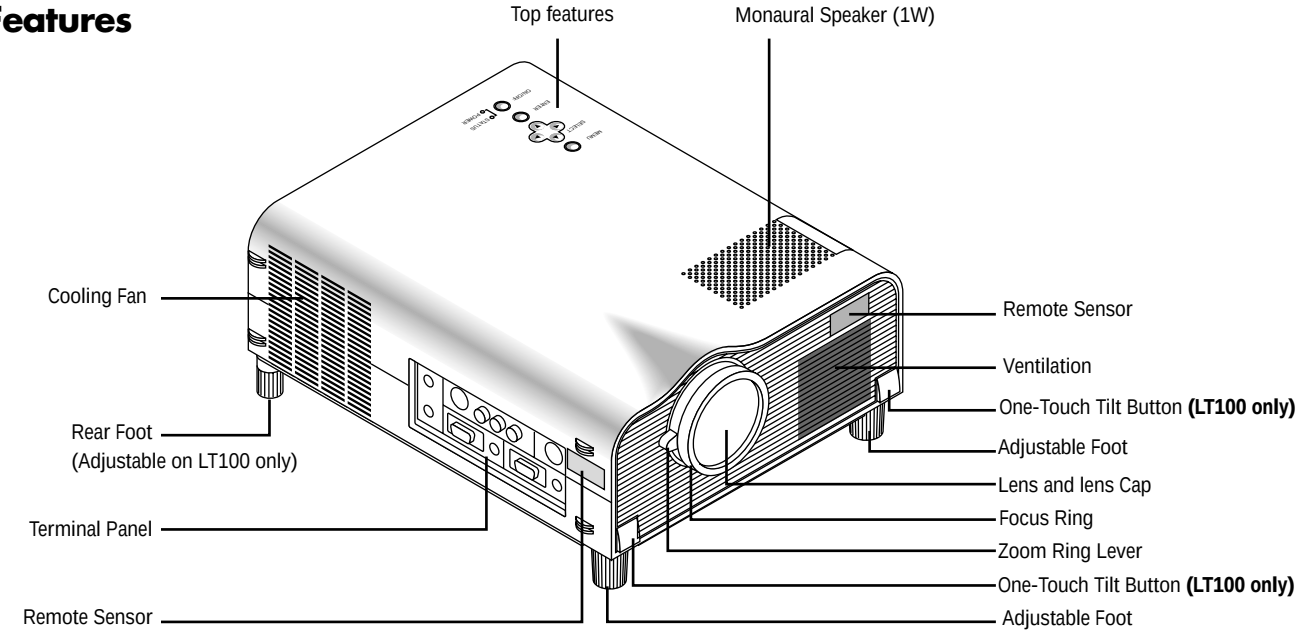

Rear Features

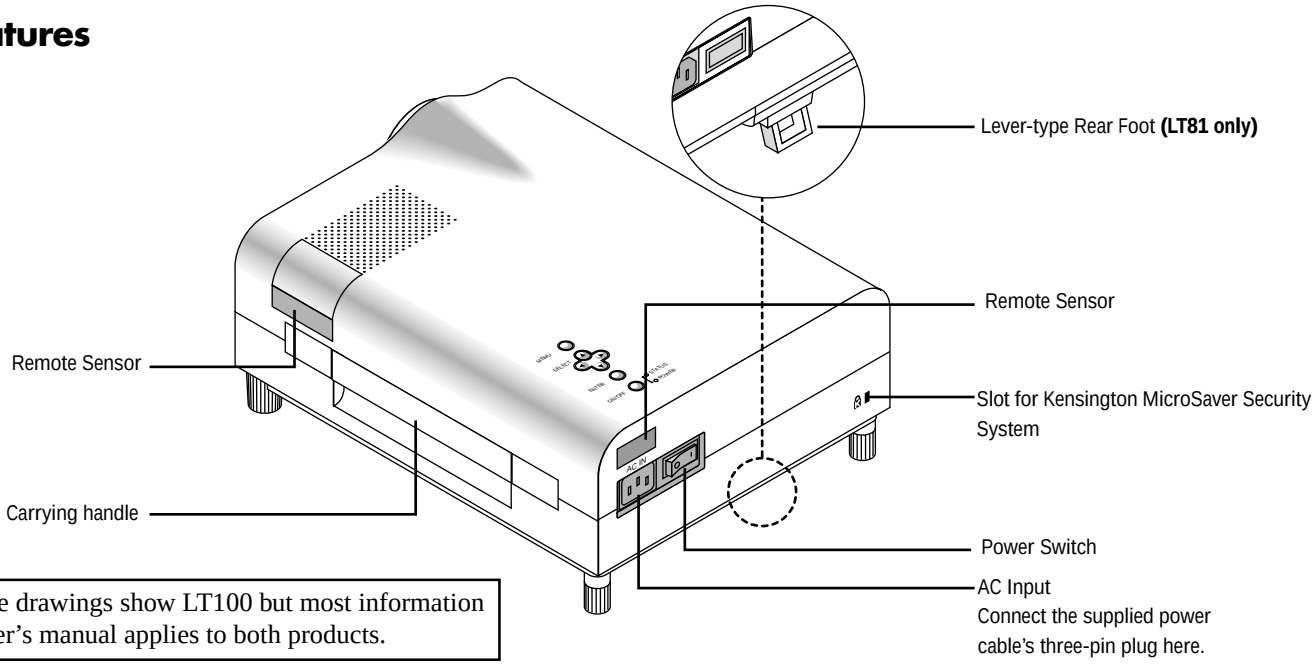

The above drawings show LT100 but most information in this user's manual applies to both products.

Top Features

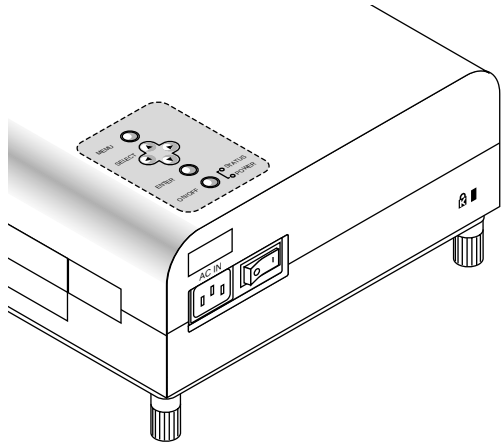

1 Power Button

Use this button to turn the power on and off when Main Power Switch is on and the projector is on standby.

2 Enter Button

Executes your menu selection.

3 Select (▲▼◀ ▶) / (+)(–) Buttons

Select: (▲▼◀▶) After you press the “Menu” button, use the ▲ or ▼ button to select the menu icon of the item you wish to adjust.

(+)(–): Use these buttons while you' re in the Image Adjust mode to change the level of a selected menu item. These buttons are also used to set an item in the Power or Settings menus.

4 Menu Button

Displays the on- screen menu.

5 Power Indicator

When the projector is switched On, the green LED blinks for about one minute, then lights up.

If the main power is on and you switch it off by pressing POWER OFF on the remote control or press and hold down the POWER button on the cabinet for one second, the green LED blinks for one minute, then lights up and the projector goes on standby.

* The projector will not accept operation instructions for the one minute during which the LED is blinking during switching on or off as described above.

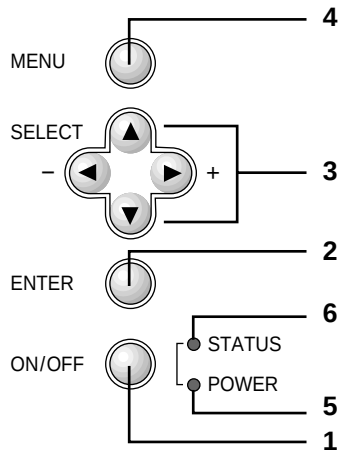

6 Status Indicator

When this is lit red continually, it's warning you that the projection lamp has exceed 1000 hours of service. After this light appears, it is advisable to replace the projection lamp as soon as possible.(See page 81.)

When the operating time of the lamp exceeds 1000 hours, the STATUS indicator is lit red continually. In addition the message "LAMP USAGE XX HOURS" appears continually when the on-screen menu is not displayed.

If this light blinks red rapidly, it indicates that the lamp house is not attached properly; if the light blinks slowly it means the projector's internal temperature is too hot to operate safely. See the Status Light Messages on page 89 for more details.

Terminal Panel Features

This panel is located in the side and is where you connect your cables.

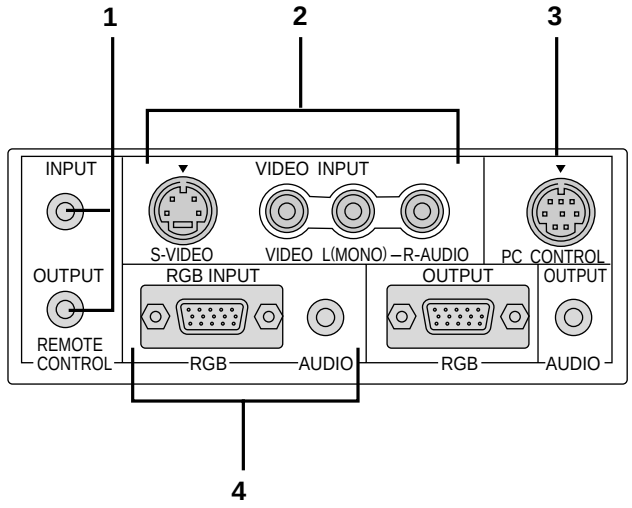

1 Remote Control Jacks (LT100 only)

a. Remote Control Input Jack

Connect your remote control cable here for wired operation.

b. Remote Control Output Jack

This terminal enables you to operate up to five projectors with the same remote control. When your remote mouse receiver is connected here, the remote sensors on the projector cabinet will receive your mouse commands.

2 Video Input

Connect a VCR, laser disk player, DVD player, or document camera here to project video.

Left Channel/Mono Audio Input Jack

This is your left channel audio input for stereo sound coming from video equipment or audio system. This also serves as your monaural audio input.

Right Channel Audio Input Jack

This is your right channel audio input for stereo sound.

S-Video Input

Here is where you connect S-Video input from an external source like a VCR.

NOTE: *S-Video provides more vivid color and higher resolution than the traditional composite video format.*

---

3 PC Control Port

Use this port to connect your PC to control the MultiSync LT81/LT100 Projector. This enables you to use your PC and serial communication protcol to control the projector. If you are writing your own program, command reference are on pages 103 to 106.

4 RGB Input Connector (Mini D-Sub 15 pin)

Connect your PC or other RGB equipment such as IBM or compatible computers. Use the signal cable that's supplied to connect to a PC. This also serves as the Y/Cb/Cr input connector which allows you to connect a DVD player with the component video output.

RGB Audio Input Mini Jack

This is where you connect RGB audio output from a computer or another RGB source.

5 RGB Output Connector (Mini D-Sub 15 pin)

You can use this connector to loop your computer image to an external monitor from the RGB input source.

Even if VIDEO is selected, the video image input to the RGB INPUT terminal is output.

Audio Output Mini Jack

You can use this jack to loop your audio to an external monitor from the VIDEO audio input or RGB audio input source.

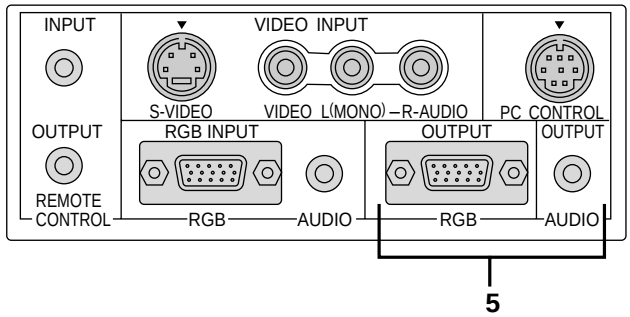

6 Built-in Security Slot (🔒)

This security slot supports the MicroSaver® Security System.

MicroSaver® is a registered trademark of Kensington Microware Inc. The logo 🔒 is trademarked and owned by Kensington Microware Inc.

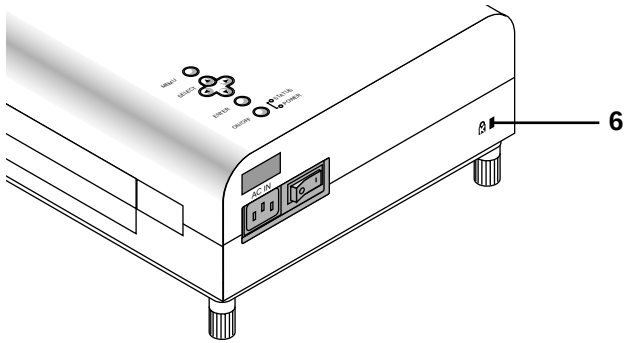

Remote Control Features

You can use your wireless remote control to operate your MultiSync LT81/ LT100 Projector. With the remote mouse receiver connected to your computer, you can also use the projector's remote control to operate your computer. (See pages 53 to 56 to connect the remote mouse receiver to your computer.)

***NOTE**: If you are using a Macintosh computer, you can click either the right or left button to activate the mouse.*

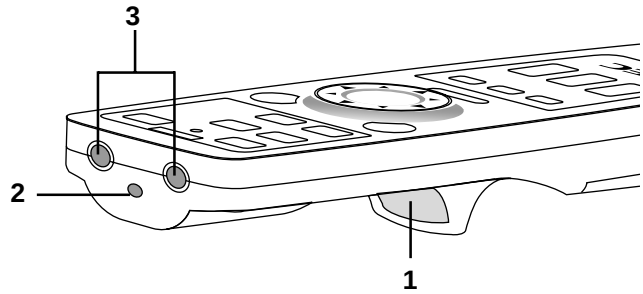

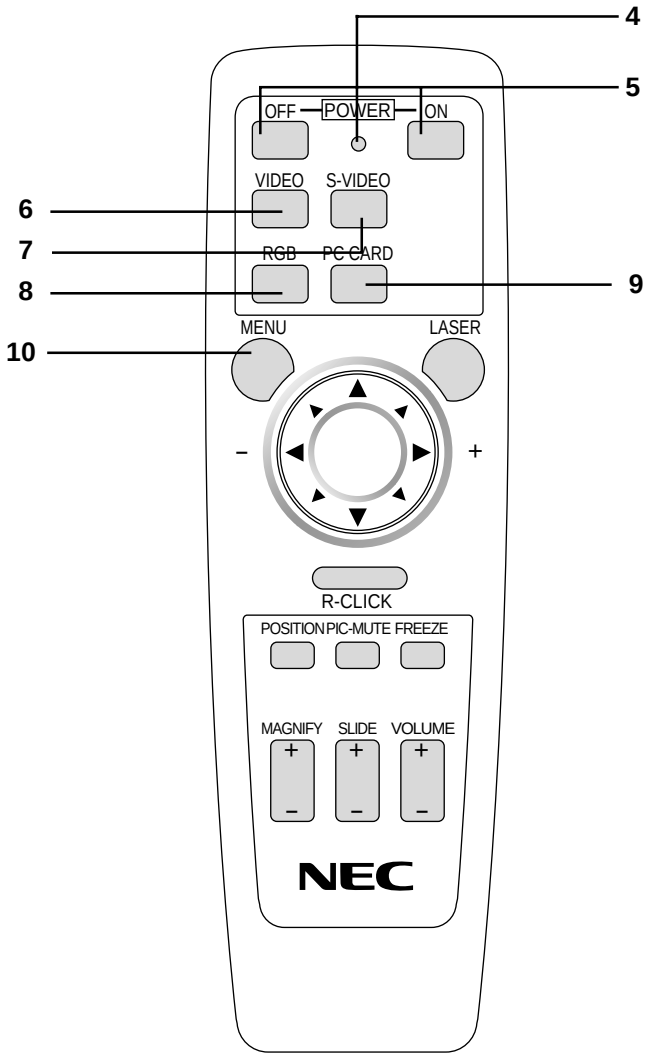

1 Left Click Button
Use this button to enter your menu selection. It works the same as the "Enter" button on the cabinet.

2 Laser Pointer
Beams a laser light when "Laser" button is pressed.

3 Infrared Transmitter
Direct the remote control toward the remote sensor on the projector cabinet or the remote mouse receiver.

4 LED
Flashes when any button is pressed.

5 Power On And Off
If your main power switch is turned on, you can use these buttons to turn your MultiSync LT81/LT100 Projector on and off.

6 Video Button
Press to select an NTSC, PAL, SECAM or NTSC4.43 compatible video source from a VCR, DVD player, laser disc player or document camera.

7 S-Video Button
Press to select an S-Video source from a VCR or other S-Video source.

8 RGB Button
Press to select a video source from a computer connected to your RGB port.

9 PC Card Button
Press to display a slide from the flash memory card inserted in the PC card slot of your projector. (You must first install the optional LT Viewer board into your projector.)

10 Menu Button
Use this button to call up the On-Screen Menu so you can adjust and set the image. After you press this button, it will light up. During this time you can use the mouse pointer and right/left click buttons to make menu selections. If no buttons are pressed within 10 seconds the menu turns off.

11 Laser Button

Press and hold this button to activate the laser pointer. When lit, you can use the laser to draw your audience's attention to a red dot that you can place on any object within 30 feet (10 m).

12 Mouse Pointer Buttons

Works as a mouse for your computer. This button is also used to adjust screen position. Push (+) or (–) to select the submenu you want to adjust.

13 Right Click Button

Press this button to exit "Menus" or "Position."

14 Freeze Button

This button will freeze a video image. Press again to resume motion.

15 Position Button

When image is magnified, press this button to activate the mouse. This allows you to select the portion of the image displayed on screen. Position button will remain lit for 10 seconds or until right click button is pushed.

***NOTE**: When you are adjusting Position, the Mouse Pointer button is used to move the picture.*

16 Picture Mute Button

This button turns off the image and sound for a short period of time. Press again to restore the image and sound.

17 Magnify Button

Use the (+) or (–) button to adjust the image size up to 400%.

18 Slide Button

Press (+) to advance the next file or slide and (-) to return to the previous file or slide. (the optional LT Viewer board required)

19 Volume Buttons

Press (+) to increase the volume and (–) to decrease it.

20 Remote Jack (LT100 only)

Connect your remote control cable here for wired operation.

***NOTE**: You cannot use Menu and Position at the same time.*

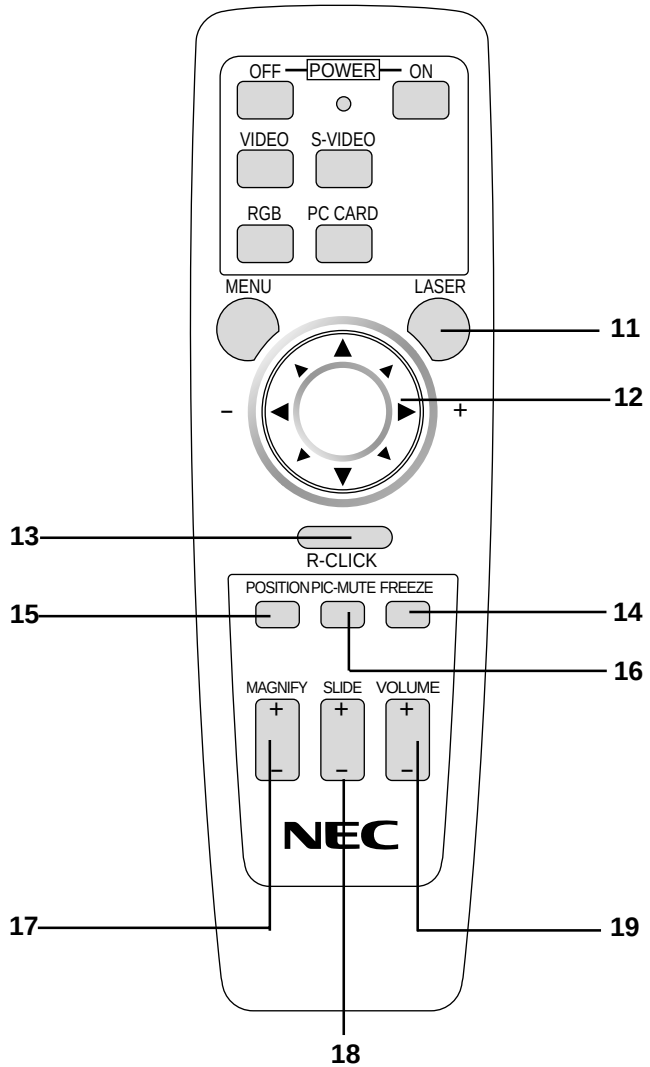

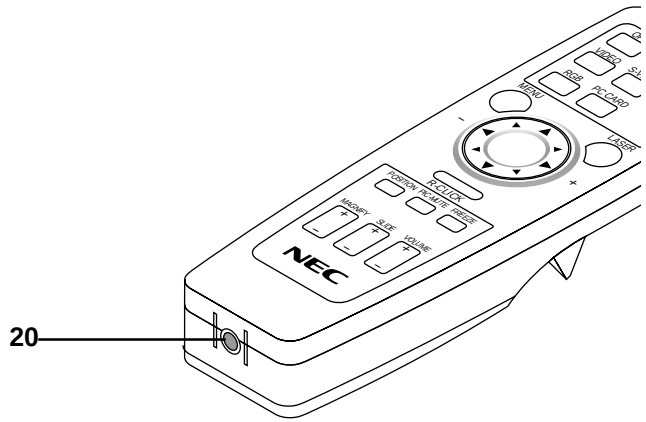

Remote Control Precautions

- Do not look into the laser pointer while it is on.
- Do not point the laser beam at a person.
- Handle the remote control carefully.
- If the remote control gets wet, wipe it dry immediately.
- Avoid excessive heat and humidity.
- If you will not be using the remote control for a long time, remove the batteries.
- Do not mix new and old or different types of batteries.

This section describes how to set up your MultiSync LT81/LT100 projector and how to connect video and audio sources.

Setting Up Your MultiSync LT81/LT100 Projector

Your MultiSync LT81/LT100 Projector is simple to set up and use. But before you get started, you must first:

1. Determine the image size
2. Set up a screen or select a non-glossy white wall onto which you can project your image.

Carrying The Projector Always carry your projector by the handle. Ensure that the power cord and any other cables connecting to video sources are disconnected before moving the projector. When moving the projector or when it is not in use, cover the lens with the lens cap.

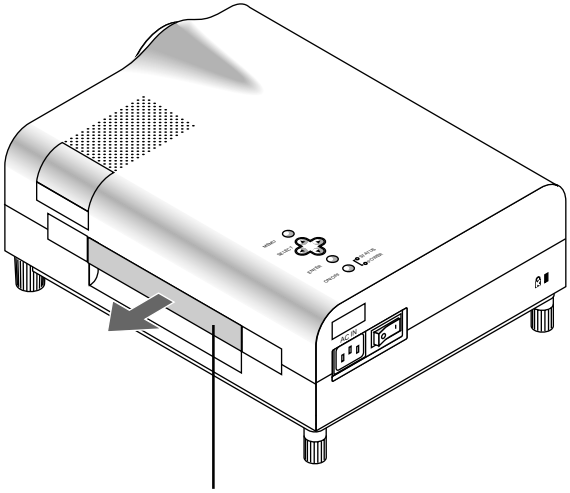

Carrying handle
Pull it out ; push it back to retract.

Selecting A Location The further your projector is from the screen or wall, the larger the image. The minimum size the image can be is approximately 24" (0.61 m) measured diagonally when the projector is roughly 4 feet (1.2 m) from the wall or screen. The largest the image can be is 300" (7.6 m) when the projector is about 40.35 feet (12.3 m) from the wall or screen.

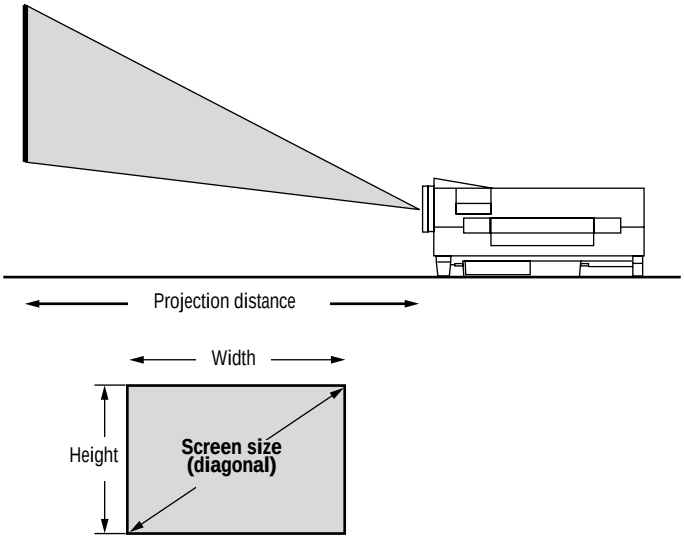

Projection Distance and Image Size

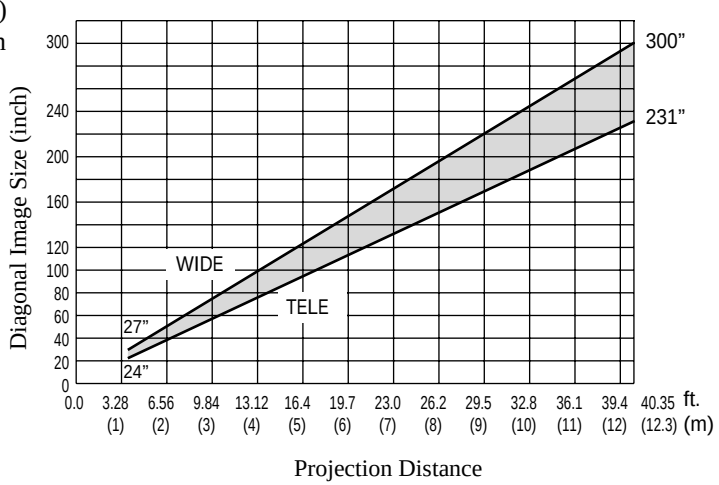

Projection Distance

Wide

Screen size	inch	40”	60”	70”	80”	90”	100”	120”	150”	180”	200”	240”	270”	300”
Projection angle α	Degree	14.8	14.8	14.7	14.7	14.6	14.6	14.6	14.6	14.5	14.5	14.5	14.5	14.5
Screen width H	inch	32	48	56	64	72	80	96	120	144	160	192	216	240
	mm	813	1219	1422	1626	1829	2032	2438	3048	3658	4064	4877	5486	6096
A	inch	65.2	97.8	114.8	131.6	148.3	164.8	198.5	248.7	298.9	332.3	399.2	449.4	500.2
	mm	1655	2483	2915	3342	3767	4185	5042	6316	7591	8441	10140	11415	12704
B	inch	4.7	7.0	8.2	9.3	10.5	11.7	14.0	17.5	21.0	23.3	28.0	31.5	35.0
	mm	119	178	207	237	267	296	356	444	533	593	711	800	889
Projection distance C	inch	63	94.5	111	127.3	143.5	159.4	192.1	240.7	289.3	321.7	386.5	435.1	484.3
	mm	1600	2400	2819	3233	3645	4049	4879	6114	7348	8171	9817	11052	12301
D	inch	12	18	21	24	27	30	36	45	54	60	72	81	90
	mm	305	457	533	610	686	762	914	1143	1372	1524	1829	2057	2286
E	inch	24	36	42	48	54	60	72	90	108	120	144	162	180
	mm	610	914	1067	1219	1372	1524	1829	2286	2743	3048	3658	4115	4572

Tele

Screen size	inch	40”	60”	70”	80”	90”	100”	120”	150”	180”	200”	240”	270”	300”
Projection angle α	Degree	11.4	11.4	11.4	11.4	11.3	11.3	11.3	11.3	11.3	11.3	11.2	11.2	–
Screen width H	inch	32	48	56	64	72	80	96	120	144	160	192	216	–
	mm	813	1219	1422	1626	1829	2032	2438	3048	3658	4064	4877	5486	–
A	inch	84.4	126.5	147.2	168.7	190.8	212.8	255.2	319.6	384.0	426.3	512.7	577.2	–
	mm	2143	3213	3739	4286	4847	5406	6483	8117	9753	10829	13024	14660	–
B	inch	4.7	7.0	8.2	9.3	10.5	11.7	14.0	17.5	21.0	23.3	28.0	31.5	–
	mm	119	178	207	237	267	296	356	444	533	593	711	800	–
Projection distance C	inch	82.7	124	144.3	165.4	187.1	208.7	250.3	313.4	376.6	418.1	502.9	566.1	–
	mm	2101	3150	3665	4201	4752	5301	6358	7960	9566	10620	12774	14379	–
D	inch	12	18	21	24	27	30	36	45	54	60	72	81	–
	mm	305	457	533	610	686	762	914	1143	1372	1524	1829	2057	–
E	inch	24	36	42	48	54	60	72	90	108	120	144	162	–
	mm	610	914	1067	1219	1372	1524	1829	2286	2743	3048	3658	4115	–

* For Screen Sizes of 24 to 300 inches not indicated on the projection tables, use the formulas on the next page.

Desk top

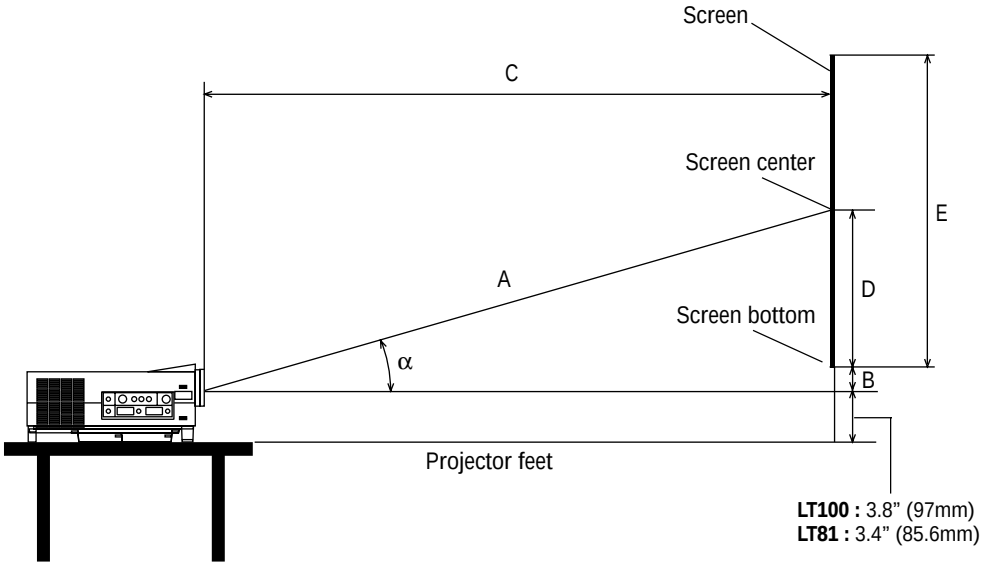

Unit (inch)
H (inch) = Width of screen
A = C / cosα
B = 3.7H / 25.4
C (WIDE) = (2.026×H) – 2.437
C (TELE) = C (WIDE)×1.3
D = E / 2
E = H / 4×3

Unit (mm)
H (inch) = Width of screen
A = C / cosα
B = 3.7H
C (WIDE) ={(2.026×H) – 2.437} ×25.4
C (TELE) = C (WIDE)×1.3
D = E / 2
E = H / 4×3

Ceiling mount

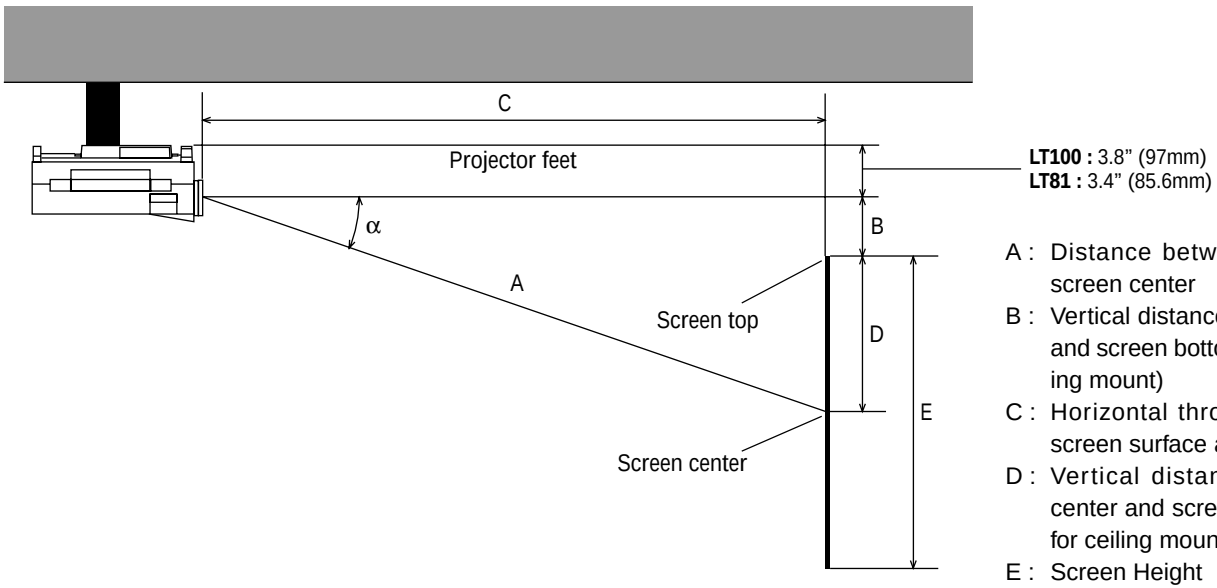

A : Distance between lens center and screen center
B : Vertical distance between lens center and screen bottom (screen top for ceiling mount)
C : Horizontal throw distance between screen surface and projector lens
D : Vertical distance between screen center and screen bottom (screen top for ceiling mount)
E : Screen Height

Using A Tabletop Or Cart

1. Place your projector on a flat level surface at the optimal distance from the screen or wall so you realize the size image you want. (Avoid having bright room lighting or sun light directly on the screen or wall where you'll be projecting the image.)

2. Connect the power cable, remove the lens cap and turn the projector on. (If no input signal is available, the projector will display a background image.)

3. Ensure that the projector is square to the screen.

4. Move the projector left or right to center the image horizontally on the screen. (A)

5. **[LT100]** To center the image vertically (B), lift the front edge of the projector and press the buttons on the front of the projector, just above the feet, to release the one-touch tilt feet. (There is approximately 5.0˚ of up and down adjustment for the front of the projector.)

[LT81] To center the image vertically (B), raise the lever-type foot on the rear straight up.

6. To fine tune the image's position vertically on the screen, rotate each front foot, and rear feet if necessary.

NOTE: *Adjust feet so that lens surface is parallel to the screen. If you use the projector with the screen tilted, the picture will be distorted.*

7. Adjust the size of the image using the zoom ring lever on the lens.

NOTE: *The set up angle of the projector should not exceed 15 degrees, otherwise lamp life could decrease dramatically.*

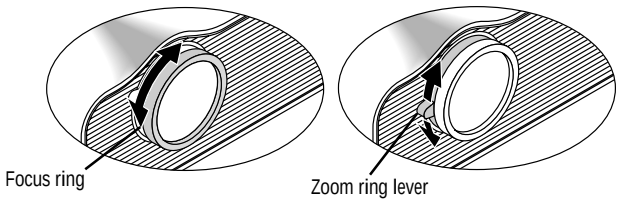

(A) Top view

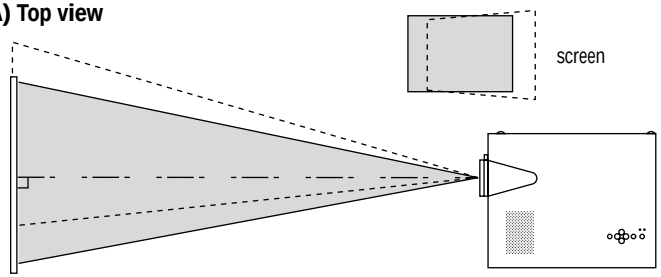

(B) Side view

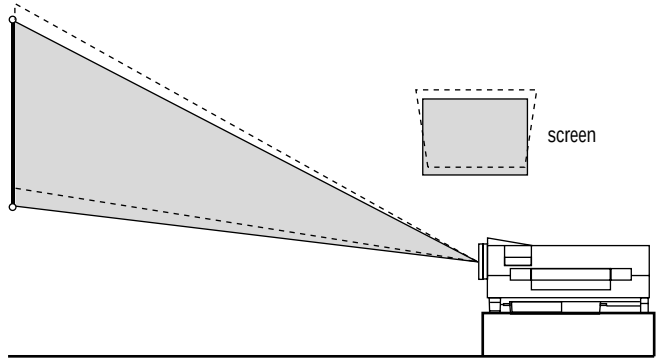

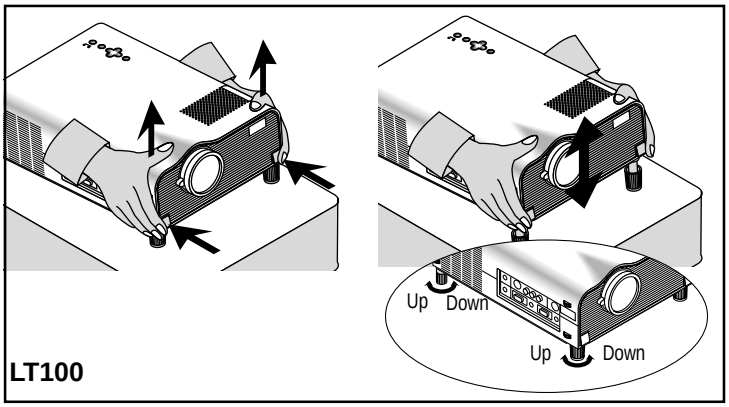

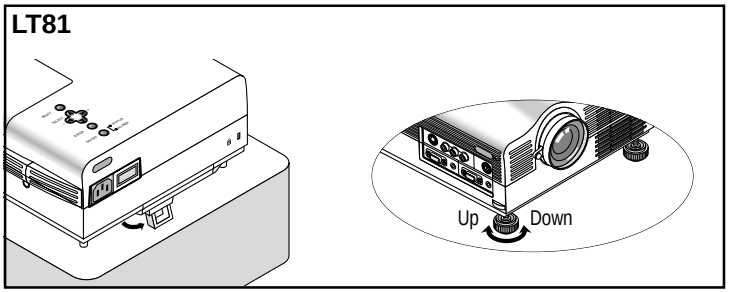

Transporting and storing the projector

A padded carrying case has been supplied with your projector. Please use this case when transporting and storing the projector. The carrying case also has a compartment for your laptop computer.
To use the carrying case follow the directions below:

[LT81]

1. Remove any accessories.

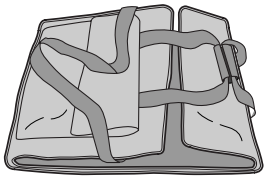

2. Unfold carrying case.

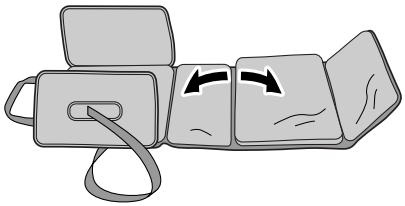

3. Put the projector in the large compartment of the case.

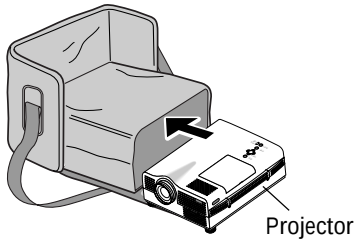

4. Zip up the sides of the case.

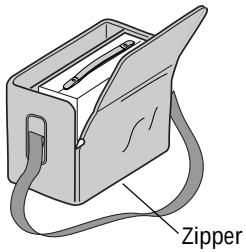

5. Place notebook computer into carrying case.

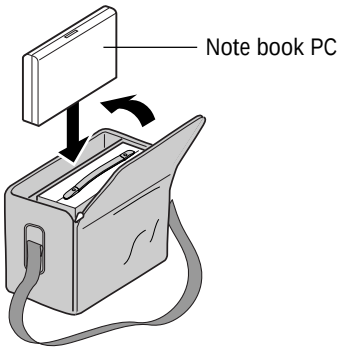

6. Store remote control and other accessories in front pouch.

* Carry projector carefully. Bumping projector may cause damage.

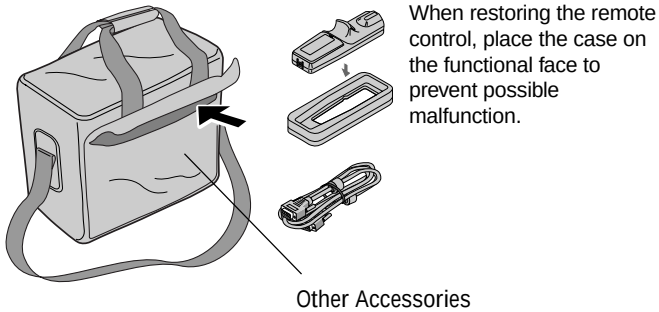

Transporting and storing the projector
[LT100]

1. Unfold carrying case.

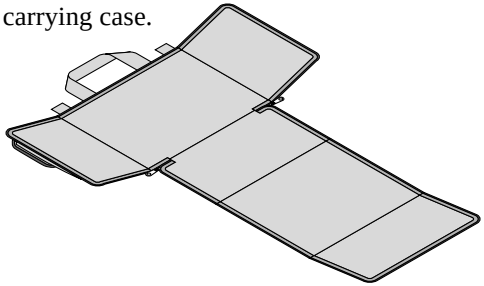

2. Zip up the sides of the case.

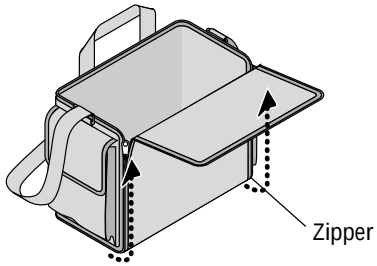

3. Hold the projector by it's handle and slide it into the large compartment of the carrying case.

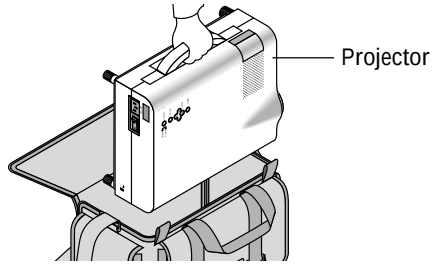

4. Zip up the top of the case.

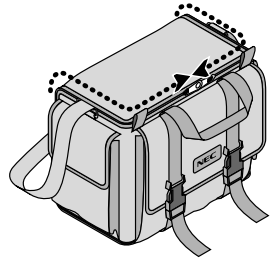

5. Unlatch the belt and then place your notebook computer into the front pouch.

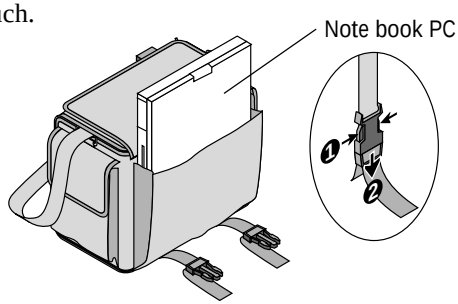

6. Latch the belt.

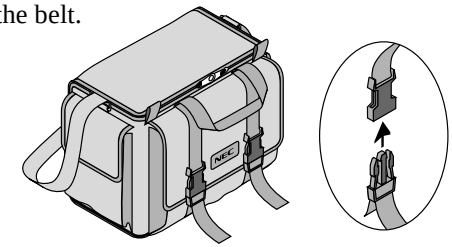

7. Store the remote control and other accessories in the side pouches on the carrying case.

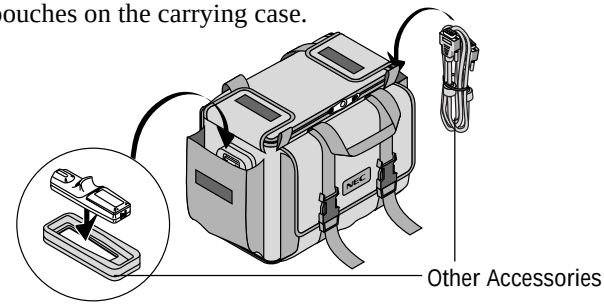

When storing the remote control, place the remote in its protective case. The case will keep the remote buttons from being accidentally pushed while it is being stored or transported. This will keep the batteries from being discharged.

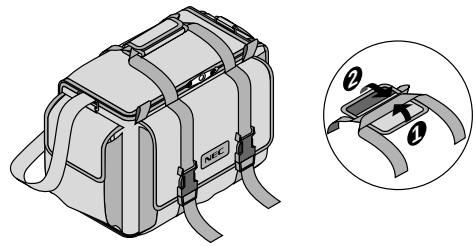

* Carry the projector carefully. Bumping or dropping the projector may cause damage.

⚠ WARNING

- Only use your projector on a solid, level surface. If the projector falls to the ground, you can be injured and the projector severely damaged.
- Do not use the projector where temperatures vary greatly. The projector must be used at temperatures between 41˚F (5˚C) and 95˚F (35˚C).
- Do not expose the projector to moisture, dust, or smoke. This will harm the screen image.
- Ensure that you have adequate ventilation around your projector so heat can dissipate. Do not cover the vents on the bottom or the side of the projector.

Ceiling Installation

Installing your MultiSync LT81/LT100 Projector on the ceiling must be done by a qualified technician. Contact your NEC dealer for more information.

Do not attempt to install the projector yourself.

***NOTE** : Distances may vary ±5%.*

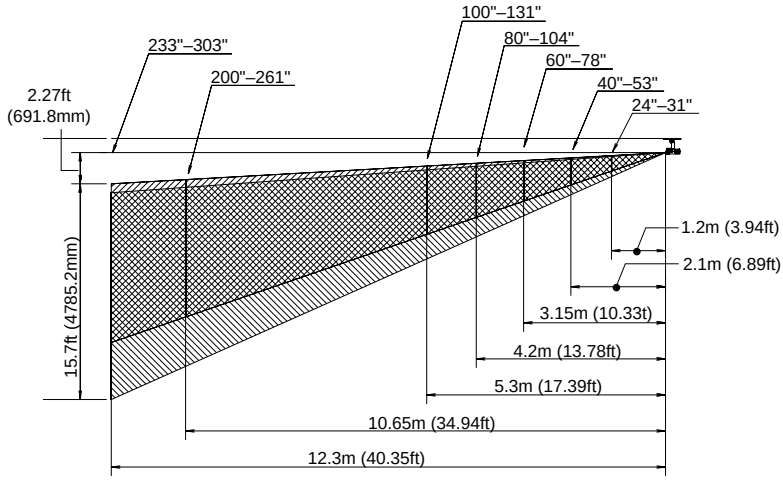

If your projector is mounted on the ceiling and your image is upside down, use the “Menu” and “Select” buttons on your projector cabinet or (▲) (▼) buttons on your remote control to correct the orientation. (See page 70.)

Projection distance and screen size examples

- Horizontal projection position —— Lens centered left to right
- Vertical projection position

Screen size	Projection distance L ft.(m)		Dimension H inch (cm)
Inches	Wide (W)	Tele (T)	Both W & T
24	———	3.94ft (1.20m)	2.76” (7.0cm)
40	5.25 ft (1.60m)	6.89ft (2.10m)	4.8” (12.2cm)
60	7.87 ft (2.40m)	10.33ft (3.15m)	6.93” (17.6cm)
80	10.66ft (3.25m)	13.78ft (4.20m)	9.37” (23.8cm)
100	13.3ft (4.05m)	17.39ft (5.30m)	11.46” (29.1cm)
200	26.9ft (8.20m)	34.94ft (10.65m)	23.58” (59.9cm)
300	40.35ft (12.30m)	———	35.08” (89.1cm)

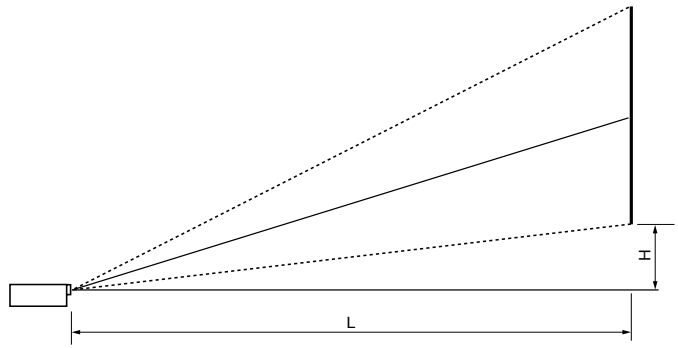

Wiring Diagram

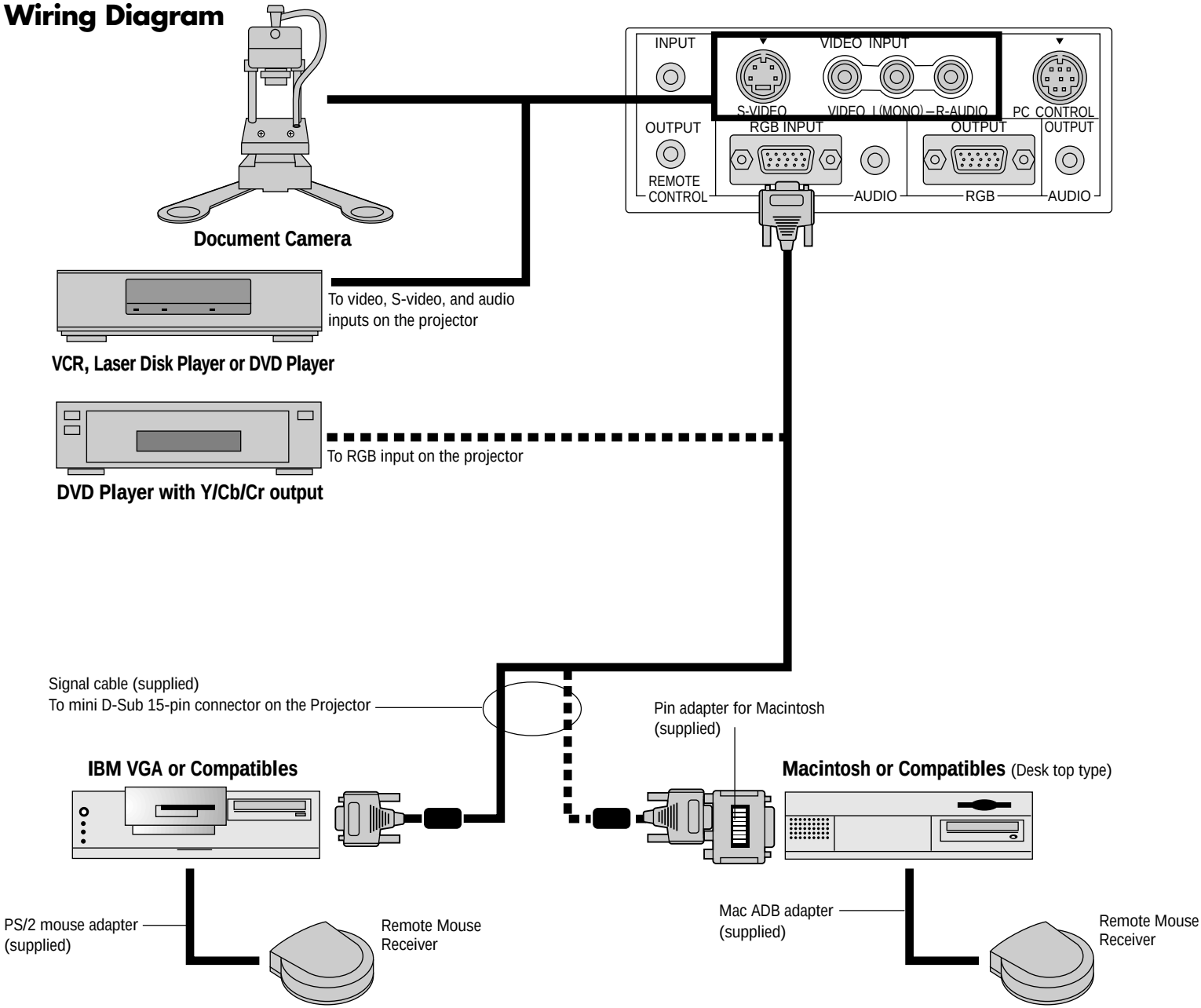

Remote Control Guideline

1. Plug the serial cable with the remote mouse receiver into your computer's mouse port and restart your computer to gain remote mouse control.
2. When using the remote control's built-in infrared mouse on a laptop computer, the laptop's mouse, trackball or trackpad will be disabled. Disconnect the infrared receiver and restart your computer to regain trackball or trackpad mouse control.
3. If the screen goes blank while using your remote control, it may be the result of the computer's screen-saver or power management software. If you accidentally hit the OFF button on the remote control, wait one full minute and then press the ON button to resume.

Connecting Your PC Or Macintosh Computer

Connecting your PC or Macintosh computer to your MultiSync LT81 (SVGA)/ LT100 (XGA) Projector will enable you to project your computer's screen image for an impressive presentation. All of these following display standards are supported:

VGA 640×480 for graphics	VGA 640×400 for graphics
VGA 640×350 for graphics	VGA 720×400 for text
VGA 720×350 for text	SuperVGA 800×600
Macintosh at 640×480	Macintosh at 832×624
XGA1024×768 (AccuBlend)	Macintosh at 1024×768 (AccuBlend)
SXGA1280×1024 (AccuBlend)*	

* indicates that this resolution is supported by LT100 only.

To connect to a PC, Macintosh or computer equipped with an XGA/SVGA/VGA adapter or compatible graphics adapter, simply:

1. Turn off the power to your projector and computer.
2. If your PC does not support XGA/SVGA/VGA you will need to install an XGA/SVGA/VGA graphics board. Consult your computer's owner's manual for your XGA/SVGA/VGA configuration. If you need to install a new board, see the manual that comes with your new graphics board for installation instructions.
3. Use the signal cable that's supplied to connect your PC or Macintosh computer to the projector. For Macintosh, use the supplied pin adapter to connect to your computer's video port.
4. Turn on the projector and the computer.
5. If the projector goes blank after a period of inactivity, it may be caused by a screen saver installed on the computer you've connected to the projector.

When using a Macintosh with the LT81/LT100, set the DIP switch of the supplied pin adapter according to your resolution. After setting, restart your Macintosh.

See the following pages for setting of the DIP switch.

- When using with a Macintosh, SVGA (800×600) / XGA (1024×768) is recommended if your Macintosh supports this mode.
- When using with a Macintosh PowerBook, output may not be set to 800×600 unless “mirroring” is off on your PowerBook. Refer to owner’s manual supplied with your Macintosh computer for mirroring.

NOTE: *A Video Adapter cable manufactured by Apple Computer is needed for a PowerBook which does not have a mini D-Sub 15-pin connector.*

Settings for Macintosh adapter

Macintosh models applied	Setting Mode (Fixed resolution)	Setting required to be selected resolution on Mac after restarting.
Desktop type and PowerBook with 800×600 LCD panel	16” fixed mode (output is 832×624)	Set to VGA/SVGA (800×600)
PowerBook with 640×480 LCD panel	13” fixed mode (output is 640×480)	Set to 17” multi-scan mode (640×480)
Desktop type with AccuBlend	19” fixed mode (output is 1024×768)	Set to 17” multi-scan mode (1024×768)

Settings for Monitor Mode

Number of DIP switch / Monitor size	S1	S2	S3	S4	S5	S6	S7	S8
15” multi-scan mode /16”–13”	ON				ON			
17” multi-scan mode /19”–13”	ON							ON
19” multi-scan mode /21”–13”	ON						ON	
13” fixed mode /640×480	ON							
VGA/SVGA mode					ON			
16” fixed mode /832×624						ON		
19” fixed mode /1024×768				ON				

NOTE: *For setting other than display modes supported by your Macintosh and LT81/LT100, using of the DIP switch may bounce a image slightly or may display nothing. If this happens, set the DIP switch to the 13” fixed mode and then restart your Macintosh. After that, restore to a displayable mode and then restart the Macintosh again.*

Make sure that LT81/LT100 and your Macintosh are connected with the pin adapter and the supplied signal cable (mini D-Sub 15-pin connector) and then restart your Macintosh.

Examples of DIP switch setting

17” multi-scan mode

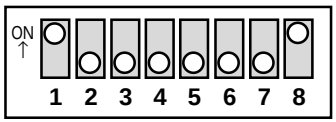

VGA/SVGA mode

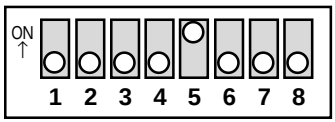

19” fixed mode

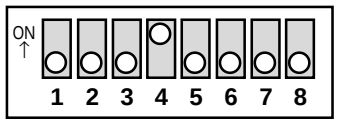

NOTE*: Refer to your computer's owner's manual for more information about your computer's video output requirements and any special identification or configuring your projector's image and monitor may require.*

Changing Video Resolutions

Depending on your computer's graphic capability, you may be able to select one of several resolutions. Generally a computer- either a PC or Macintosh- with 1 meg. of memory will run:

640×480 at 16.7 million colors (24 bit Truecolor)
800×600 at 65 thousand colors.
1024×768 at 256 colors.

As the resolution increases, the number of colors you can run decreases. With 2 meg. of memory a computer will run:

640×480 at 16.7 million colors (24 bit Truecolor).
800×600 at 16.7 million colors (24 bit Truecolor).
1024×768 at 65 thousand colors.
1280×1024 at 256 colors.

Windows 95

There are two methods you can use to change your resolution.

Method 1

1. Move your cursor to the background image and click.
2. In the "Properties" menu, select "Settings."
3. Change your resolution and click "OK."
4. You may be asked to reboot for the changes to take effect, or you' ll get a message that "Windows is about to resize your display." When asked if you want to keep your settings, select "Yes."

Method 2

1. Click on your "My Computer" icon.
2. Open "Control Panel" and select "Display."
3. Change your resolution and click "OK." after the new resolution is selected.
4. You may be asked to reboot for the changes to take effect, or you' ll get a message that "Windows is about to resize your display." When asked if you want to keep your settings, select "Yes."

Macintosh

1. Under the Apple menu, select "Control Panels" and open "Monitors."
2. Click and open "Options."
3. Select your new resolution and click "OK."

If you have an NEC monitor connected to your Macintosh, you may have a "DPI-On-The-Fly" extension that enables you to change your resolution directly. The "DPI-On-The-Fly" icon is under your Apple menu.

Windows 3.1

1. Click on the "Main" icon and open "Control Panel."
2. Select "Change System Settings" and click on "Option."
3. Choose "Change Display Settings."
4. Select the resolution you want.
5. Choose the current drive or another.
6. Restart Windows for the changes to take effect.

Connecting Your DVD Player

You can connect your MultiSync LT81/LT100 Projector to a DVD player with the component outputs or Video output. To do so, simply:

1. Turn off the power to your projector and DVD player.
2. If your DVD player has the component video (Y,Cb,Cr) output use the optional 15-pin-to-RCA×3 cable to connect your DVD player to the RGB INPUT connector on the LT81/LT100.

   For a DVD player without component video (Y,Cb,Cr) outputs, use common RCA cables (not provided) to connect a composite VIDEO output of the DVD player to the Video Input of the LT81/LT100.
3. Turn on the projector and the DVD player.

NOTE: *Refer to your DVD player's owner's manual for more information about your DVD player's video output requirements.*

Connecting Your Document Camera

You can connect your MultiSync LT81/LT100 Projector to a document camera. To do so, simply:

1. Turn off the power to your projector and document camera.
2. Use a standard video cable to connect your document camera to the Video input on your projector.
3. Turn on the projector and the document camera.

NOTE: *Refer to your document camera's owner's manual for more information about your camera's video output requirements .*

Connecting Your VCR Or Laser Disc Player

Use common RCA cables (not provided) to connect your VCR or laser disc player to your MultiSync LT81/LT100 Projector. To make these connections, simply:

1. Turn off the power to your projector and VCR or laser disc player.
2. Connect one end of your RCA cable to the video output connector on the back of your VCR, or laser disc player, connect the other end to the Video input on your projector. Use standard RCA audio patch cords to connect the audio from your VCR, or laser disc player to your projector (if your VCR, or laser disc player has this capability). Be careful to keep your right and left channel connections correct for stereo sound.
3. Turn on the projector and the VCR, or laser disc player.

NOTE: *Refer to your VCR, or laser disc player owner's manual for more information about your equipment's video output requirements.*

Connecting An External Monitor

You can connect a separate, external monitor to your projector to simultaneously view on a monitor the image you're projecting. To do so:

1. Turn off the power to your projector and computer, document camera or video source.
2. Use a 15-pin cable to connect your monitor to the RGB OUTPUT connector on your LT81/LT100 projector.
3. Turn on the projector and the computer, document camera or video source.

Connecting Your Remote Mouse Receiver

The remote mouse receiver enables you to operate your computer's mouse functions from the NEC MultiSync LT81/ LT100 remote control. It is a great convenience for clicking through your computer-generated presentations.

To connect the remote mouse receiver:

1. Turn off your computer.

2. For PCs: Remove your current mouse and connect the serial cable from the remote mouse receiver to your PC's mouse port. (Use the 6-pin adapter for connecting to a PS/2 computer.)

   For Macintosh: Remove your current mouse from your computer, attach the Macintosh adapter to the remote mouse receiver's serial cable, and connect the receiver to your mouse port.

3. When the remote mouse receiver is installed, it will disable your regular mouse, disconnect the remote mouse receiver and restart your computer.

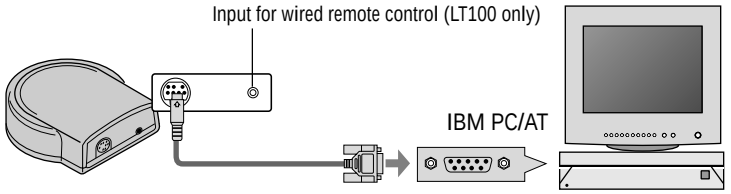

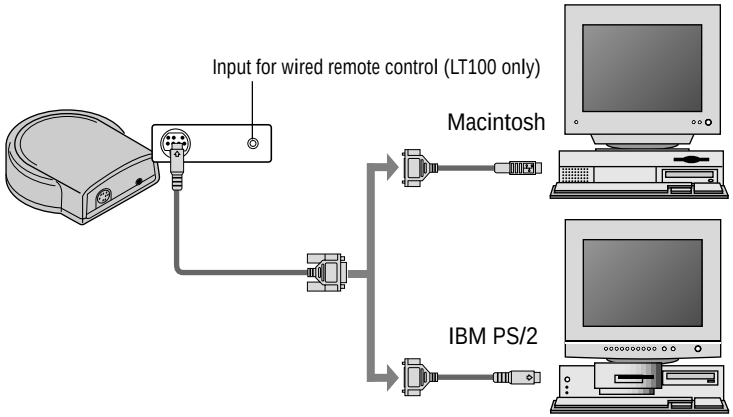

■ The Remote Mouse Receiver as a mouse for your computer

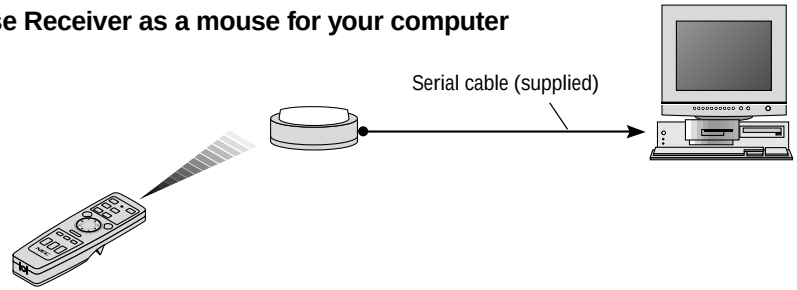

■ The Remote sensors on the projector cabinet work as the remote sensor on the Remote Mouse Receiver (LT100 only)

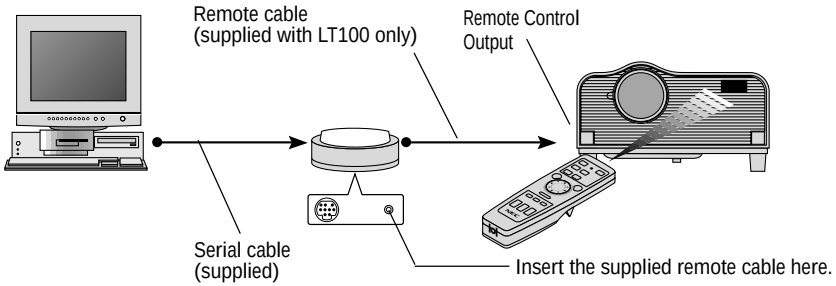

■ You can daisy-chain as many as five projectors and operate them with the same remote control. (LT100 only)

To do so:

1. Turn off your computer.
2. Use the remote control cables supplied to connect the Remote Control Output of one projector to the Remote Control Input of the next until all the projectors are connected.

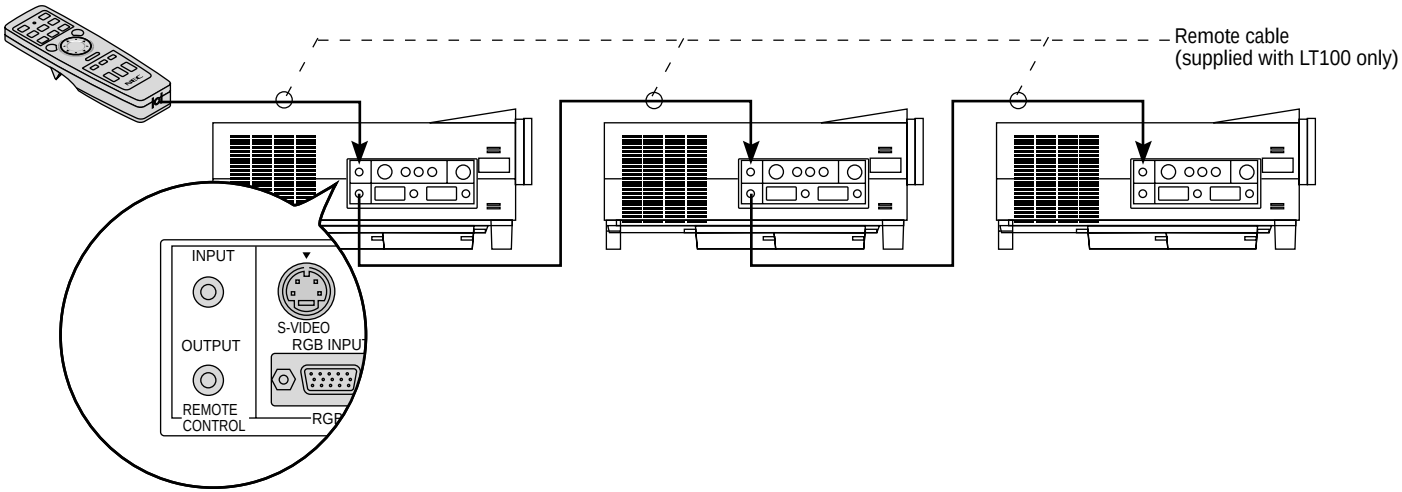

This section describes how to select a computer or video source and how to adjust the picture and sound.

General Controls Before you turn on your MultiSync LT81/LT100 Projector, ensure that the computer or video source is turned on and that your lens cap is removed.

1. **Turn On The Projector** The main power switch is on the back panel of the MultiSync LT81/LT100 Projector. By turning this switch on, the projector will go into its standby mode and the power light will glow amber. Only after you press the "On" button on the remote control or projector cabinet will the power light turn to green and the projector become ready to use.

NOTE: *To turn the projector on and off with just the back panel switch, use the menu and enable the "auto start" feature. (See page 67.)*

---

2. **Select The Computer Or Video Source** Press the "Video" (VCR, DVD player, document camera, or laser disc player), "S-video", "RGB" (computer), or "PC Card" button on the remote control to display the image. Or press the "Menu" button on the cabinet and use the icons to select your video source: "Video", "S-Video", "RGB" or "PC Card".

3. **Adjust The Image Size** Adjust the size of the screen with the zoom ring lever on the projector.
4. **Focus** Adjust the focus with the focus ring on the projector.
5. **Turning Off The Projector** First press the "off" button on the remote control or press and hold down the "on/off" button on the cabinet for one second. The power light will glow amber. Then turn off the main power switch on the back panel. The power light will go out.

IMPORTANT:

- The projector should be unplugged if it will not to be used for an extended period.
- To turn off the image and sound briefly (five minutes or less), use the "Picture Mute" button on the remote control instead of turning the projector off and on.
- The projector will display a black, blue image or focus pattern if no input signal is present.
- Do not turn the projector off and then immediately back on. The projector needs to cool for a minute before it can be restarted.

Using The Menus

1. Press the "Menu" button on the remote control or projector cabinet to display the Main Menu.
2. Press the "Select" button on the projector cabinet or (▲) (▼) buttons on your remote control to highlight the menu for the item you want to adjust.
3. Press the "Enter" button on the projector cabinet or the "Left Click" button on the remote control to select a submenu or item.
4. Adjust the level or turn the selected item "on" or "off" by using the "Adjust" (+) or (–) buttons on the remote control or cabinet. The on-screen gauge will display your changes. The (+) button is "on" and (–) is "off".
5. The change is stored until you adjust it again.
6. Repeat steps 2-5 to adjust an additional item, or press “Right-Click” on your remote control to quit the menu display.

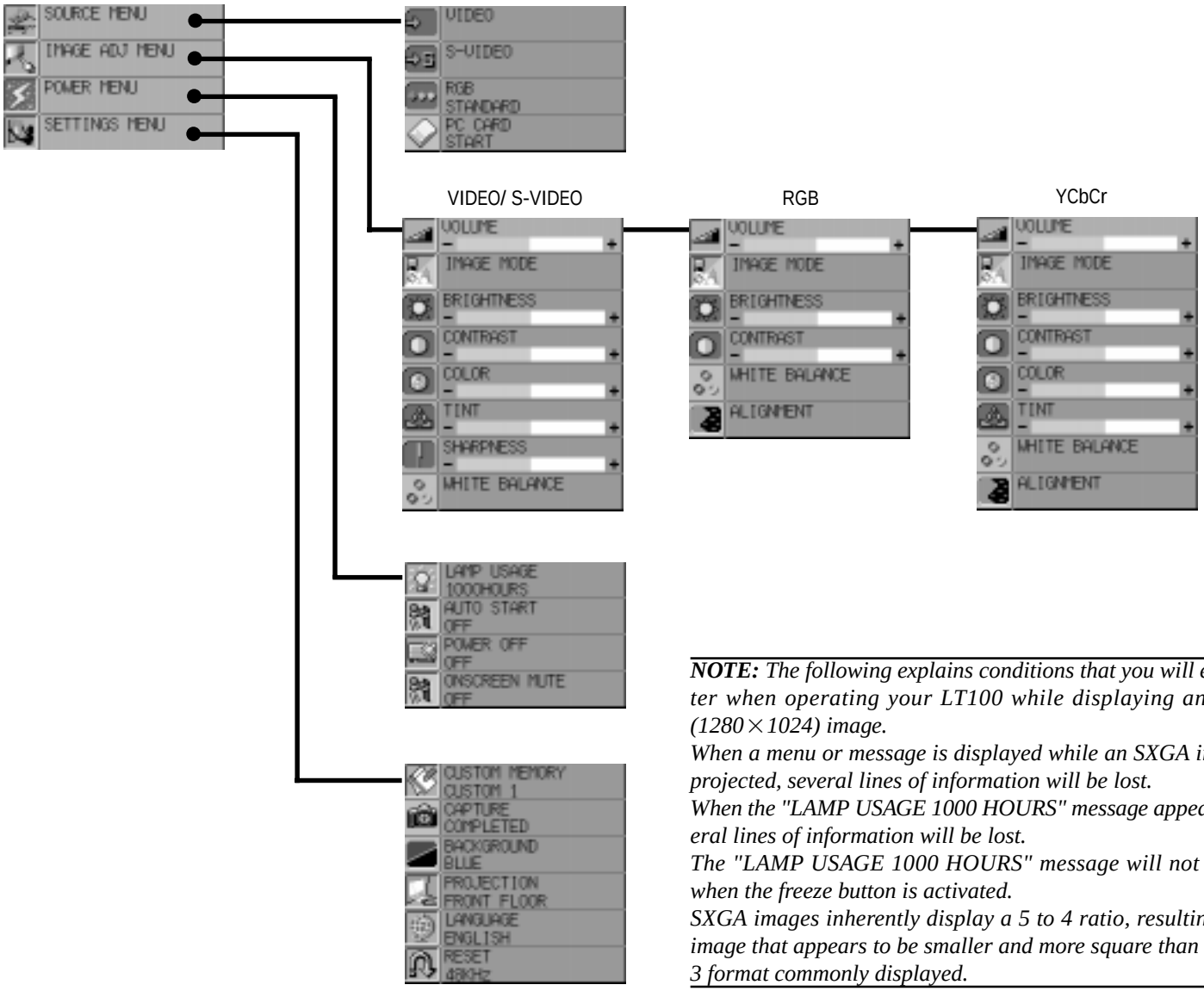

NOTE: *The following explains conditions that you will encounter when operating your LT100 while displaying an SXGA (1280×1024) image.*
When a menu or message is displayed while an SXGA image is projected, several lines of information will be lost.
When the "LAMP USAGE 1000 HOURS" message appears, several lines of information will be lost.
The "LAMP USAGE 1000 HOURS" message will not appear when the freeze button is activated.
SXGA images inherently display a 5 to 4 ratio, resulting in an image that appears to be smaller and more square than the 4 to 3 format commonly displayed.

Menu Descriptions & Functions

Source Menu

Enables you to select a video source such as a VCR, DVD player, laser disk player, computer or document camera depending on what is connected to your inputs. Press the "Select" button on the projector cabinet or (▲) (▼) buttons on your remote control to highlight the menu for the item you want to adjust.

Video

Selects device connected to your video input (VCR, document camera, laser disk player or DVD player).

S-Video

Selects device connected to S-Video input (Laser disk player, S-VHS VCR or DVD player).

RGB

Selects computer connected to your RGB input. Use the "Adjust" (+) or (–) buttons to select a standard* or one of five custom settings you can create and store. Press the "Enter" button on the cabinet or the "Left Click" button on the remote control to save your selection.

NOTE: *If a previously saved custom memory location is used with a new or different input signal it may not sync up, producing a distorted image, or no image at all. If so, follow the instructions below:*

1) *Disconnect the signal cable so that there is no input signal. In this condition the on-screen message will be displayed.*
2) *Select RGB standard from the source menu.*
3) *Connect the signal cable again.*

NOTE*: * Standard is normally used and it can be user changed and automatically recalled.*

PC CARD

This feature enables you to make a presentation using the Viewer function with the optional LT Viewer board (VK-LT81 for LT81 / VK-LT for LT100) installed.
Press the Mouse pad (+) or (-) buttons to select "START" for the image you want to display first and "SELECT FILE" for the file you want to select or "Select Slide" for the image you want to slide.

Image Adjustment Menu

Provides access to controls for your image and sound. Use the “Select” button on the projector cabinet or (▲) (▼) buttons on your remote control to highlight the menu for the item you want to adjust.
The volume, image mode, brightness, contrast, color, tint, sharpness and white balance controls are available for Video or S-Video sources.
The volume, image mode, brightness, contrast, horizontal position, vertical position, white balance, alignment and auto picture controls are available for RGB source.

Volume

Use the “Adjust” (+) or (–) buttons to adjust the volume.

Image Mode

Use the "Select" button on the projector cabinet or (▲) (▼) buttons on your remote control to select the item you want to adjust.

NOTE: *Input and Display modes are not available for PC CARD.*

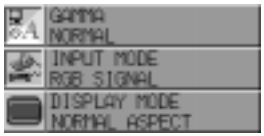

Gamma ..... Use the mouse pad (+) or (–) buttons to choose "Normal" when in a lighted room and "Natural 1&2" when in a darkened room. "Natural 1" for better flesh tone; "Natural 2" for true reproduction of middle tones.

Input Mode ..... Use the mouse pad (+) or (–) buttons to choose "DOC CAM" for a document camera or other low APL input, "Standard Video" for a regular video picture such as NTSC, "RGB Signal" for an RGB source such as a computer, or "Y/Cb/Cr Signal" for a component video source such as a DVD player.

Display Mode ... Use the mouse pad (+) or (–) buttons to choose "Normal Aspect" for normal video picture with a 4-to-3 aspect ratio and "Wide Aspect" for DVD's with a 16-to-9 aspect ratio.

NOTE:

1) *Flicker may appear on a freeze-frame picture with a Video or S-Video source. If this happens, select the Document Camera mode using the Image mode icon on the Image Adjustment Menu, and then adjust the contrast and other items for an optimal image.*
2) *A frame may freeze for a brief period of time when a video is played back in fast-forward or fast-rewind with a Video or S-Video source. If this happens, select the Natural mode (for cinema) using the Image Mode icon on the Image Adjustment Menu.*

Brightness
Use the “Adjust” (+) or (–) buttons to adjust the brightness.

Contrast
Use the “Adjust” (+) or (–) buttons to adjust the contrast.

Color*
Use the “Adjust” (+) or (–) buttons to adjust the color.

Tint*
Use the “Adjust” (+) or (–) buttons to adjust the tint.

Sharpness*
Use the “Adjust” (+) or (–) buttons to adjust the sharpness.

White Balance
Use the Mouse pad (+) or (–) buttons to adjust the white balance.
For Video/RGB ... Brightness for each color (RGB) is used to adjust the black level of the screen; Contrast for each color (RGB) to adjust the white level of the screen.
For Y/Cb/Cr ..... Brightness for each color (Y/Cb/Cr) is used to adjust the white level of the screen; Contrast for each color (Y/Cb/Cr) to adjust the black level of the screen.

Alignment
Use the Mouse pad (+) or (–) buttons to adjust the horizontal and vertical position, "Picture", and "Fine Picture".
Horizontal
Position** ..... Use the “Adjust” (+) button to move the image right; (–) to move it left.
Vertical
Position** ..... Use the “Adjust” (+) button to move the image up; (–) to move it down.

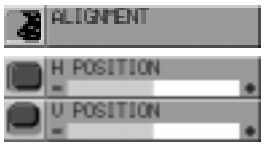

RGB AUTO PICTURE ON

RGB AUTO PICTURE OFF

Auto Picture**
Use the “Adjust” (+) button to turn this feature on so “Picture” and “Fine Picture” adjustments are made automatically. Use the “Adjust” (–) button to turn this feature off so you can make “Picture and Fine Picture” adjustments manually.

Picture Adjustment **(when AUTO PICTURE is off)
Use this icon with the “Fine Picture Adjustment” to fine tune the computer image or to remove any vertical banding that might appear. This function adjusts the clock frequencies to eliminate the vertical banding in the image. Press the “Adjust” (+) and (–) buttons until the banding disappears. This adjustment may be necessary when you connect your computer for the first time. This adjustment is made automatically when the Auto Picture is turned on.

Fine Picture **(when AUTO PICTURE is off)
Use this icon to adjust the clock phase or to reduce video noise, dot interference or cross talk. (This is evident when part of your image appears to be shimmering.) Use the “Adjust” (+) and (–) buttons to adjust the image. Use the Fine Adjustment only after the Picture Adjustment is complete. This adjustment is made automatically when the Auto Picture is turned on.

NOTE:
- ★ *Color, Tint, and Sharpness controls will not work with an RGB source. The Tint control will not work with a PAL or SECAM source. The Color and Tint controls will work with a Y/Cb/Cr source.*
- ★★ *Alignment controls such as Horizontal and Vertical position controls, and Picture, Fine Picture and Auto Picture adjustments will not work with a Video or S-Video source.*

Power Menu

Provides access to Lamp Usage information, the Auto Start, Power Management and On-screen Mute features. Use the “Select” button on the projector cabinet or (▲) (▼) buttons on your remote control to access a submenu. Then press “Adjust” (+) or (–) to choose a specific option.

Lamp Usage

This tells you how long the lamp has been in operation. It is recommended that you replace a lamp after 1000 hours of service. After you install a new lamp, select this icon and press and hold the “Power On” button on the remote control for ten seconds to reset the lamp clock back to zero.

***NOTE**: The projector will turn off and go into stand by mode after 1100 hours of service. If this happens, press the "Power Off" button on the remote control for ten seconds to reset the lamp clock back to zero. Do this only after replacing the lamp.*

Auto Start

Turns the projector on automatically when the main power switch is turned on. This eliminates the need to always use the “Power” button on the remote control or projector cabinet. Press (+) to turn this feature on and (–) to turn it off.

Power Management

When “Power Off” is on and there is no video input for five minutes or more, the projector will automatically turn itself off. Press the (+) to turn this feature on and (–) to turn it off.

On Screen Mute

Use the mouse pad (+) button to turn off the On Screen Mute ; (–) to restore it.
The On screen Mute feature keeps the menu from displaying when the projector is turned on or when switching inputs.

Settings Menu

Enables you to set preferences and other operating options. Use the “Select” button on the projector cabinet or (▲) (▼) buttons on your remote control to access the submenu you want.

Custom Memory

This enables you to save your current settings for an RGB source in one of five memories, Custom 1-5.
To change the STANDARD settings, proceed as follows:

1. Connect your computer to the MultSync LT81/LT100.
2. Select the "STANDARD" in RGB source.
3. Adjust the horizontal/vertical position, Picture, and Fine Picture adjustments.
4. Select the Custom Memory icon.
5. Press the "Adjust" (+) or (–) buttons to choose a memory location, then press "Enter" on the cabinet or the "Left Click" on your remote control to save the new settings.
   If you do not want to change the STANDARD settings, first selct the Custom Memory icon, then do the same as step 5.

Capture (with the optional viewer board installed only)

When the Capture is selected, press "Enter" on the projector cabinet or Left Click button on the remote control to display "Execute" and "capture" an image from a source that is currently being displayed.
When capturing is completed, "Completed" is displayed under the Capture icon.
Unless a flash memory card is inserted into the slot of the viewer board, "No Card" is displayed. This means that the Capture feature is not available. The "Card Error" display means that the free space of the flash memory card is insufficient for saving images. Make more space available on the card by erasing unwanted images with your PC. The number of images that can be captured depends on the size of the flash memory card.

NOTE: *Be sure not to turn off the power or remove the flash memory card unless "Completed" is displayed. Doing so could cause a loss of the data in the flash memory card or damage to the card itself.*

Background

Use this feature to display a black, blue screen or focus pattern when no signal is available. Press the mouse pad (+) or (-) buttons to choose the back screen you want. Press "Enter" on the cabinet or the "Left Click" on your remote control to save your change.

Projection

This reorients your image based upon projector location. Press the “Adjust” (+) or (–) button until it is correct. Press “Enter” on the cabinet or the “Left Click” on your remote control to save your change. The options are: front floor projection, rear ceiling projection, rear floor projection, and front ceiling projection.

Language

Use the “Adjust” (+) or (–) to choose one of six languages for on-screen instructions. Press “Enter” on the cabinet or the “Left Click” on your remote control to save your change. The options are: English, German, French, Italian, Spanish and Swedish.

Reset

Changes all adjustments to the factory preset levels for each source individually. To activate, you must hold down the “Adjust” (+) button on the cabinet or remote control for at least two seconds. The adjustments that will be reset are horizontal and vertical control, picture and fine picture adjustment (for the current source only), brightness, contrast, color, tint, and sharpness.
When custom setting is selected, reset changes all adjustments to the factory preset levels of the current input signal for selected custom memory location. This will not return to your previous custom setting and will delete your saved settings from custom memory.

Using the Viewer function

If you use the Viewer function on the projector, you must first install the optional LT Viewer board (VK-LT or VK-LT81) in the projector and set up the exclusive software included with the VK-LT or VK-LT81 kit. See the user's manual included with the Viewer board for installing and uninstalling the software.

Mounting the Optional LT81 Viewer Board (VK-LT81)

> Before mounting the viewer board, you must first switch off the main power and unplug the power cable.

To install the Viewer board:

1. Remove the board cover using a flat-head screwdriver.

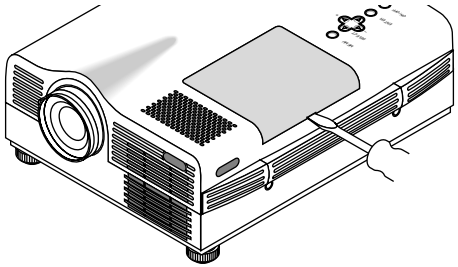

2. Put the board in place and secure it with the four screws supplied with the VK-LT81 board.

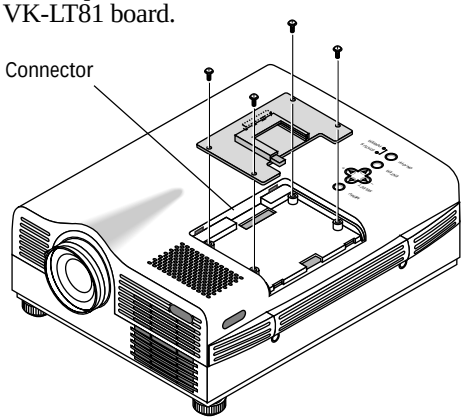

3. Align the catches of the supplied viewer board cover with the holes.

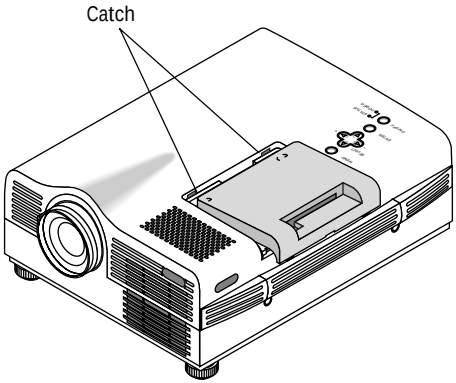

4. Push down the viewer board cover.

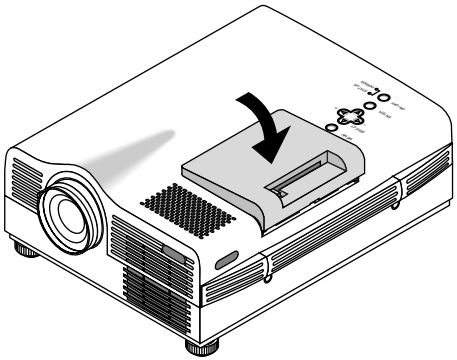

Mounting the Optional LT100 Viewer Board (VK-LT)

Before mounting the viewer board, you must first switch off the main power and unplug the power cable.

To install the VK-LT Viewer board:

1. Turn the projector so that the bottom is up.

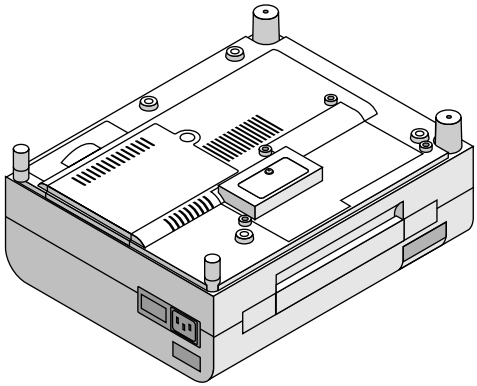

2. Remove the screw from the board cover.

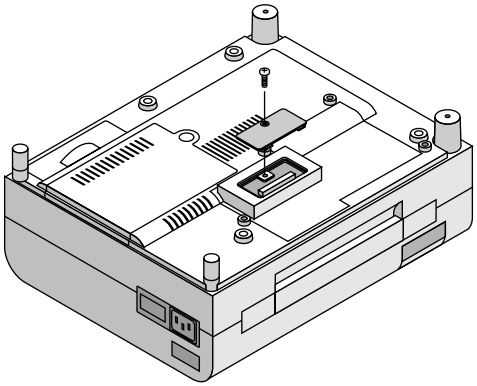

3. Put the board in place and secure it with the four screws supplied with the VK-LT board.

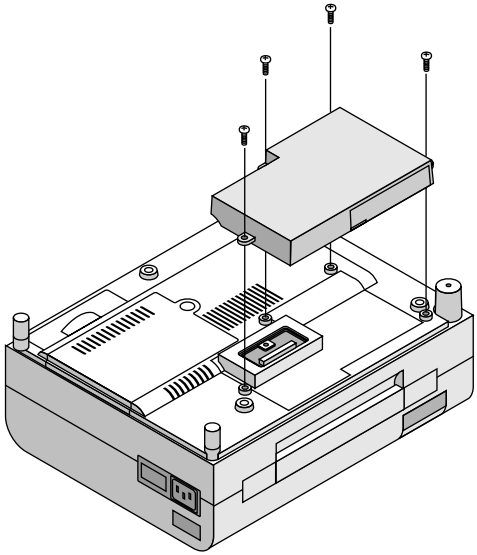

4. Attach the two foot caps to adjust projector height. After completing, put the projector back in the original position.

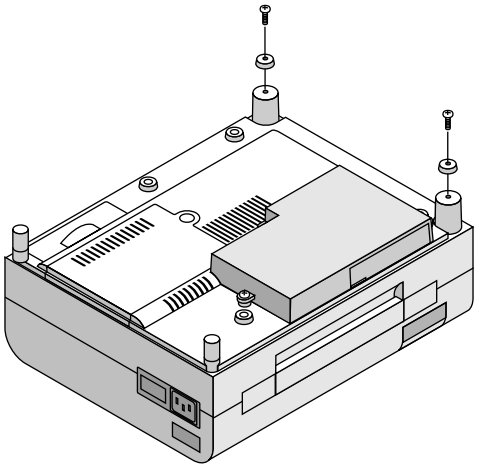

Projecting Slides

Orientation of flash memory card and CompactFlash™ (CF™) memory card insertion.

The flash memory card has a front and a back side and the flash/CF memory card is designed to be inserted in only one orientation. The card is designed so that it cannot be inserted in reverse. Trying to force the card into slot may result in damage to the card and the card slot. See the flash/CF memory card manual for information about the orientation of the flash/CF memory card.

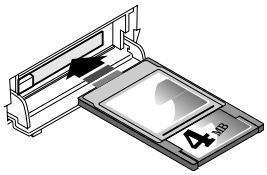

LT100

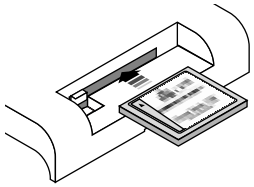

LT81

* The type of flash/CF memory card required for use in the projector is a Type II PCMCIA-ATA flash memory card for LT100 and CF card for LT81. Never use a different type of card, doing so may result in damage to the card or PC card slot.

4. Select a file or a slide.
   Use the mouse pad (+) or (–) button on the remote control to select the file or slide you want to display and press the Enter button on the cabinet or the Left Click button on the remote control. See the following pages for more details.

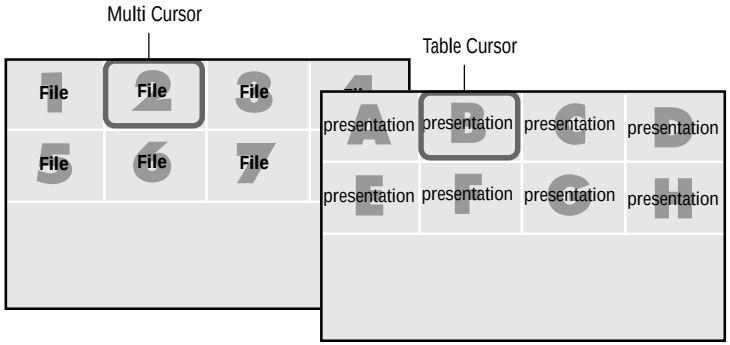

* The selected file or slide will be displayed.

NOTE: *If you select "Start" and press the Enter button on the cabinet or the Left Click button on the remote control, the slides will be looped. To use the Start feature, you must first set on the software included with the LT Viewer board.*

To Project the Slides (the presentation materials)

1. Insert a flash/CF memory card into the PC card slot.
   * To eject the flash memory card, press the Eject button.

   NOTE: *Should the card be difficult to insert, do not forcefully push the card in.*

2. Select the PC card as a source.
   * Press the Menu button on the remote control or projector cabinet and select "PC CARD" from the Source menu.

   * If there is no flash/CF memory card in the card slot, the projector displays a blue back or black back image.

3. Select "Select File" or "Select Slide".
   * Use the mouse pad (+) or (-) button on the remote control to select "Select File" or "Select Slide".

NOTE: *The mouse pad (+) or (–) button is valid only when the Menu button is lit.*

CompactFlash and CF are trademarks of SanDisk Corporation.

Selecting a File from a List of Files

* The Viewer feature allows you to store one or more presentation materials in a single flash/CF memory card. Each material is referred to as a "file" or "slide".

To select a file from a list of files

1. Press the Menu button on the remote control or cabinet to select "PC Card".

2. Use the mouse pad (+) or (-) button on the remote control to select "Select File" and press the "Enter" button on the cabinet or the Left Click button on the remote control.

3. Use the mouse pad (+) or (–) button on the remote control to move the Multi-Cursor (blue box) to the file you want to display a slide from, and press the Enter button on the cabinet or the Left Click button on the remote control.

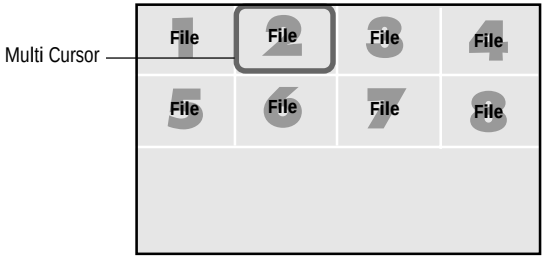

* This will display the first slide of the selected file.

NOTE: *A maximum of 16 indexes can be switched with "Select File". The last displayed file, which is always exclusively for use of Capture, will be displayed during capturing only.*
When 17 or more indexes exist in the flash/CF memory card and you wish to display them, move the index to be displayed to the beginning of the file indexes with "Editing file indexes" under "Files" of the software for Viewer.

Selecting a Slide from a List of Slides (Table)

To select a slide from a list of slides

1. Press the Menu button on the remote control or cabinet to select "PC Card".

2. Use the mouse pad (+) or (-) button on the remote control to select "Select Slide" and press the "Enter" button on the cabinet or the Left Click button on the remote control.

3. Use the mouse pad (+) or (–) button on the remote control to move the Table-Cursor (yellow box) to the slide you want to display and press the Enter button on the cabinet or the Left Click button on the remote control.

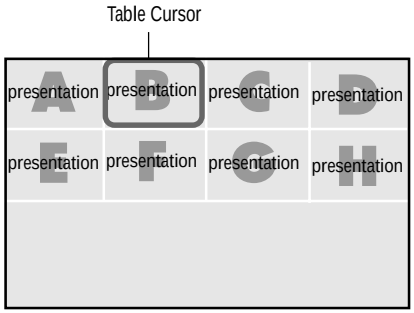

* This will display the selected slide.

NOTE: *The Slide (+) and (–) button on the remote control can be also used to select a file or slide, or to turn pages.*

Switching Slides

To switch slides, press "SLIDE +" or "SLIDE –" button. This will cancel the Auto Play mode. To set the Auto Play mode, press the Menu button to select “Start” from the Source menu and press the Enter button on the cabinet or the Left Click button on the remote control. This is valid only when the Auto Play mode is selected. See more information about “Auto Play mode” for the Help file included with the Viewer board.

* SLIDE– returns to the previous slide.
  SLIDE+ advances to the next slide.

NOTE: *Editing tasks such as deleting the data inside the flash memory card cannot be accomplished with the projector. Use the exclusive software on your PC for this purpose. If you accidentally delete data required for playback, playing back the data is not possible.*

Effect Sound (LT100 only)

The Viewer function allows you to play back effect sound for the slide. Playing back effect sound can be accomplished during the switching slides or files only. To use this feature, you must first specify the effect sound with the supplied software.
You can adjust volume by using the Volume button.

2. Use the mouse pad (+) button to move the Multi-Cursor (blue box) to the last file and press the Enter button on the cabinet or the Left Click button on the remote control.

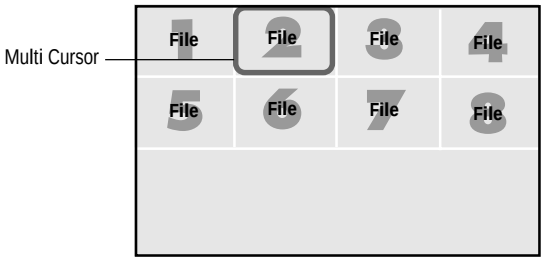

* This will display the image you captured first.

NOTE: *The menu indicating that capturing is now performing will be displayed during capturing. During this time do not remove the flash/CF memory card nor turn off the power of the projector. Doing so may destroy the data of the flash/CF memory card.*
** When the flash memory card becomes full, replace it with a new card.*

Capturing the displayed image

The Viewer feature allows you to capture a screen image and store it to a flash/CF memory card.

To capture a screen image and store it to a flash memory card;

Select "Capture" from the Settings menu and press the Enter button on the cabinet or Left Click button on the remote control.

* To view the captured image

1. Select "Select File" from the Source menu and display a list of files.
   * A thumbnail (reduced image) of the first captured image will be displayed.

Display Digital Images

Displaying a picture from the projector is possible if the picture meets one of the following requirements:

* The picture is stored on an MS-DOS formatted ATA flash memory card.
* The picture is stored as a compatible format.

The on-board Viewer searches the PC Card directory for a JPEG or BMP formatted images.

NOTE:
** Up to 128 images can be recognized as slides for one directory.*
** To use special effects, read images from a flash/CF memory card and edit them using the supplied software, then store them to another flash/CF memory card.*

This section describes the simple maintenance procedures you should follow to replace the lamp and replace the batteries in the remote control.

Replacing The Lamp

After your lamp has been operating for 1000 hours or longer, the “status” light in the cabinet will turn red. Even though the lamp may still be working, replace it at 1000 hours to maintain optimal projector performance.

⚠ CAUTION

- DO NOT TOUCH THE LAMP immediately after it has been used. It will be extremely hot. Allow at least one hour for the lamp to cool before handling.
- DO NOT REMOVE ANY SCREWS except the lamp cover set screw and two lamp case screws. You could receive an electric shock.
- Turn off the main power to the projector and disconnect the power cord. Allow at least one hour for the lamp to cool.
- The projector will turn off and go into stand by mode after 1100 hours of service. If this happens, be sure to replace the lamp. If you continue to use the lamp after 1000 hours of use, the lamp bulb may shatter, and pieces of glass may be scattered in the lamp case. Do not touch them as the pieces of glass may cause injury. If this happens, contact your NEC dealer for lamp replacement.

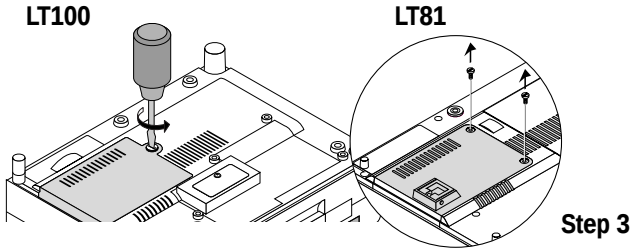

Step 3

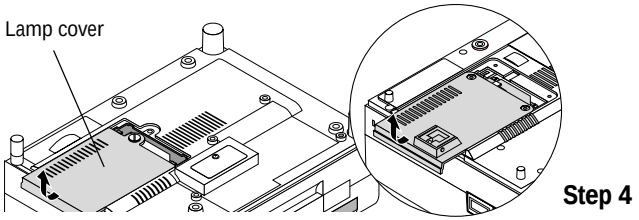

Step 4

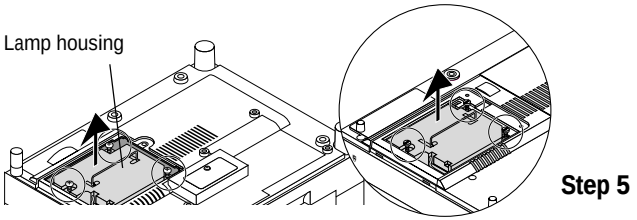

Step 5

Lamp replacement procedure

1. Switch off the main power and unplug the power cord.
2. Turn the main unit so that the bottom is up.
3. Loosen the lamp cover retaining screw.
4. Slide the lamp cover in the direction of the arrow and remove it.

> ⚠ **CAUTION:** Do not use a lamp other than the NEC replacement lamp. Order this from your NEC dealer using your projector's model number.

5. Loosen the three retaining screws for the lamp housing.
   (There is an interlock on the lamp housing to prevent the risk of electrical shock. Do not attempt to circumvent this interlock.)
6. Holding the handle, pull the lamp housing forward and take it off.
7. Install the new lamp housing and fasten with the three screws.
8. Fasten the three screws for the lamp housing.
9. Install the lamp cover back in its original position and fasten with the retaining screw.
10. Reset the lamp time.
    Select the lamp usage time menu, then press the ON button on the remote controller and hold it down for at least ten seconds.

***NOTE**: If resetting the lamp clock back to zero after 1100 hours of service, press the "Power Off" (not "Power On") button on the remote control for ten seconds. Do this only after replacing the lamp.*

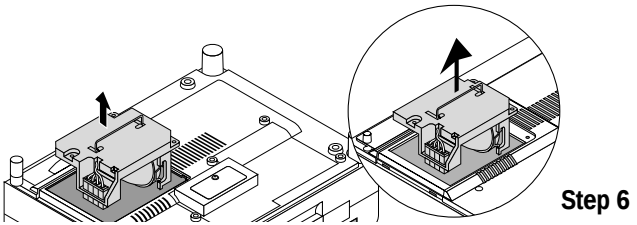
Step 6

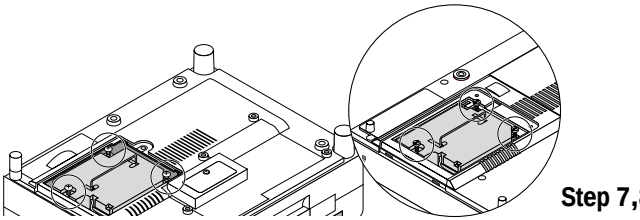
Step 7,8

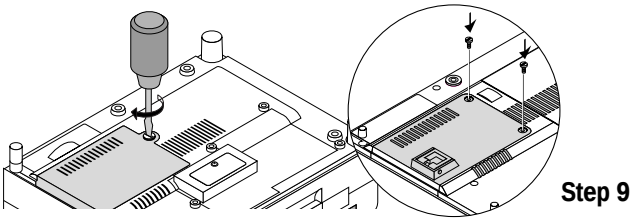
Step 9

Remote Control Battery Installation

1. Press firmly and slide the battery cover off.
2. Remove both old batteries and install new ones (AA). Ensure that you have the batteries' polarity (+/–) aligned correctly.
3. Slip the cover back over the batteries until it snaps into place.

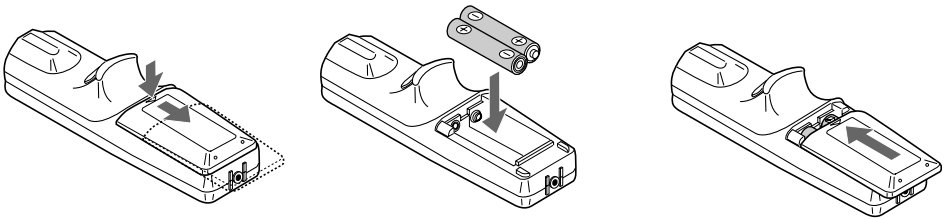

Operating Range

Range of 360˚ and a distance of 23 feet (7 m) from the remote sensor.

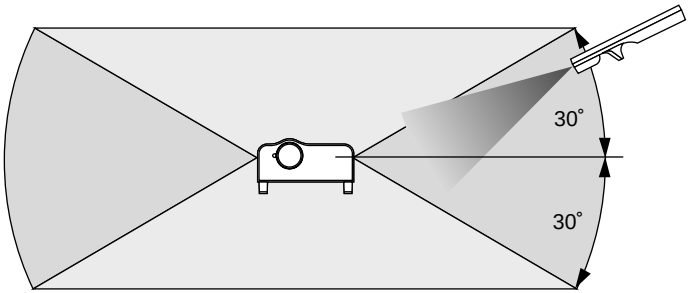

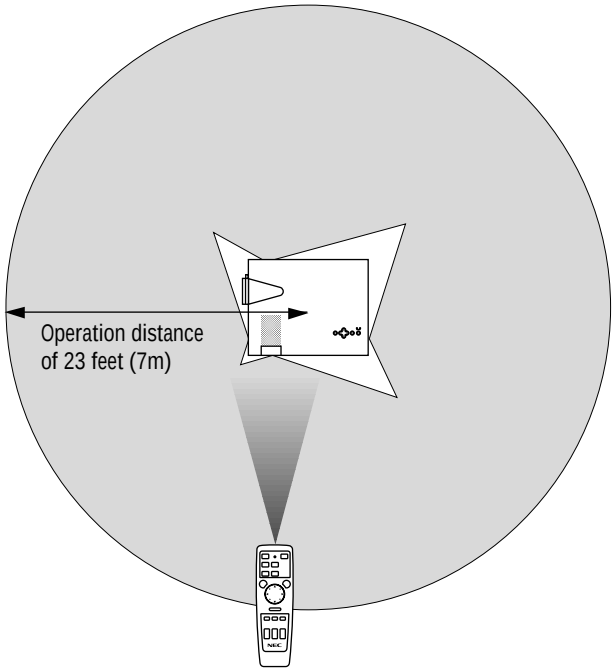

Cette section décrit les procédures simples d'entretien que vous aurez à suivre pour remplacer la lampe et remplacer les piles de la télécommande.

Remplacement de la lampe

Lorsque la lampe a été utilisée pendant 1000 heures ou plus, le voyant "Status" (état) du coffret s'allume. Même si la lampe peut encore fonctionner, remplacez-la au bout de 1000 heures pour conserver une performance optimale de votre projecteur.

⚠ PRECAUTIO N

- NE TOUCHEZ PAS A LA LAMPE juste après qu'elle a été utilisée. Elle est très chaude. Laissez-la refoidir pendant au moins une heure avant de la manipuler.
- NE RETIREZ AUCUNE VIS mis à part la vis qui fixe le couvercle de lampe et les deux vis du compartiment de lampe. Vous risquez de recevoir une décharge éléctrique.
- Mettez le projecteur hors circuit et débranchez le cordon d'alimentation. Laissez refroidir la lampe pendant au moins une heure.
- Le projecteur s'éteindra et restera en attente après 1100 heures d'utilisation. Dans ce cas, remplacez la lampe. Si vous continuez d'utiliser la lampe après 1000 heures d'utilisation, l'ampoule peut se briser et des brisures de verre peuvent être éparpillées dans le compartiment de la lampe. Ne les touchez pas car elles peuvent vous blesser. Dans ce cas, contactez votre revendeur NEC afin de procéder au remplacement de la lampe.

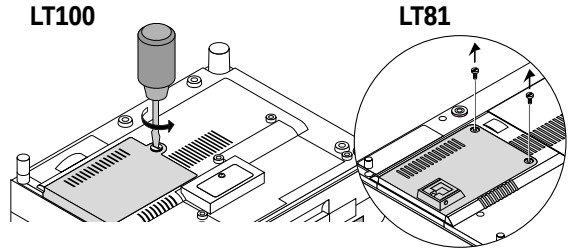

Etape 3

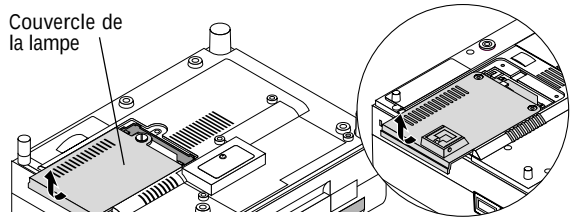

Etape 4

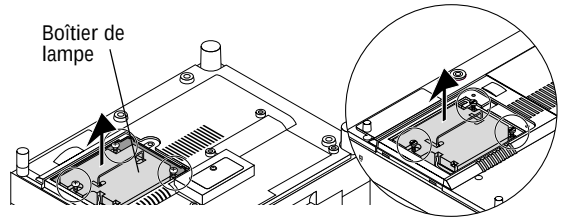

Etape 5

Pour remplacer la lampe :

1. Mettre l'appareil sous tension et débrancher le cordon d'alimentation.
2. Retourner l'unité principale pour avoir accès à la partie inférieure.
3. Desserrer le vis de fixation du couvercle de la lampe.
4. Faire glisser le couvercle de la lampe dans la direction de la flèche et le déposer.

> ⚠ **ATTENTION :** ne pas utiliser une autre lampe que la lampe de remplacement NEC. Commander celle-ci auprès du détaillant NEC à l'aide du numéro de modèle du projecteur.

5. Desserrer les trois vis du boîtier de lampe.
   (Il y a un mécanisme de déclenchement dans le boîtier de lampe pour empêcher une décharge électrique. Ne pas essayer de circonvenir ce mécanisme)
6. En maintenant la poignée, tirer le boîtier de lampe vers l'avant et l'extraire.
7. Installer le nouveau boîtier de lampe et le fixer avec les trois vis.
8. Serrer les trois vis du boîtier de lampe.
9. Réinstaller le couvercle de la lampe dans sa position d'origine et le fixer avec les vis de fixation.
10. Initialiser le temps de la lampe.
    Sélectionner le menu de temps d'utilisation de la lampe, puis appuyer sur la touche ON sur la télécommande et la maintenir enfoncée pendant au moins dix secondes.

REMARQUE : *Pour remettre à zéro l'horloge de lampe après 1100 heures d'utilisation, appuyez sur la touche "Power Off" (alimentation désactivée)(et non "Power On" (alimentation activée)) de la télécommande pendant dix secondes. Effectuez cette opération uniquement lorsque vous avez remplacé la lampe.*

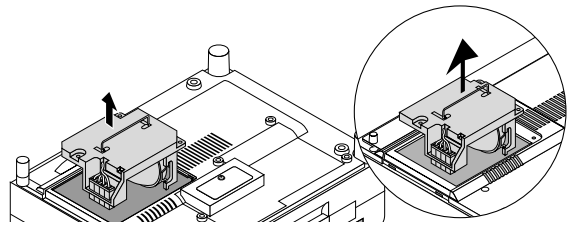

Etape 6

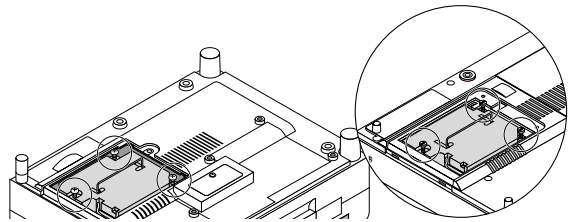

Etape 7,8

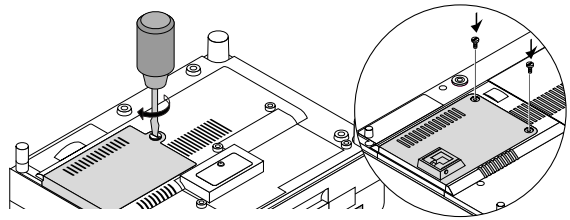

Etape 9

Installation des piles de la télécommande

1. Appuyez fermement et retirez le couvercle des piles en le faisant glisser.
2. Retirez les deux piles usagées et installez de nouvelles piles (AA). Assurez-vous de respecter la polarité (+/–) des piles.
3. Remettez le couvercle des piles en le faisant glisser, jusqu’à ce qu’il s’emboîte.

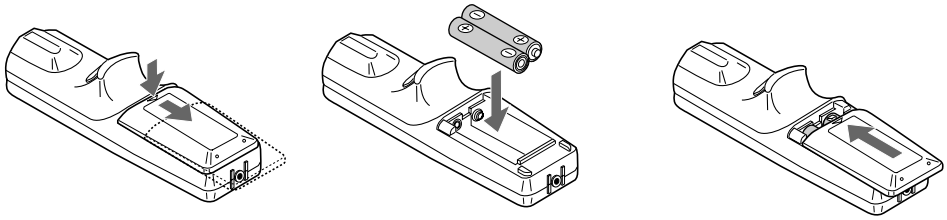

Portée de fonctionnement

Portée de 360 degrés et d'une distance de 7 mètres du capteur le télécommande.

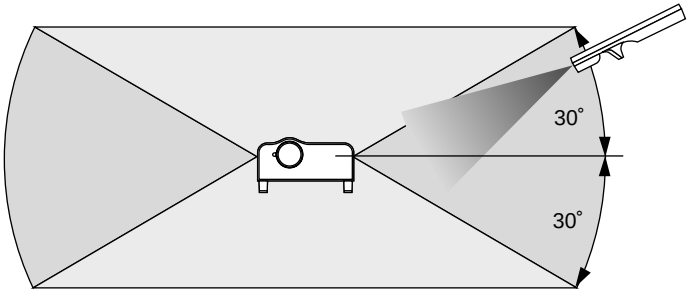

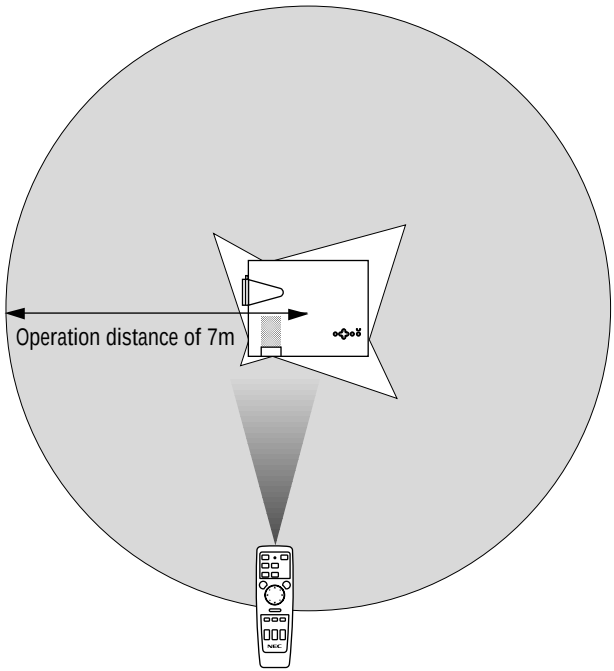

This section helps you resolve problems you may encounter while setting up or using your MultiSync LT81/LT100 Projector.

Status Light Messages

Condition	Status
OFF	■ Normal
On Continually	■ The projector lamp has exceeded 1000 hours of operation and should be replaced.
Blinking very rapidly (On and off in a cycle of 1 sec.)	■ The lamp housing is not correctly installed. Install it correctly.
Blinking rapidly (On and off in a cycle of 4 sec.)	• The temperature protector has been triggered. If the room temperature is high, move the projector to a cooler location. If the temperature inside the projector is high, check the cooling fan ventilation hole and the ventilation hole on the bottom of the projector. If any of the holes are blocked, remove whatever is blocking them. • The temperature protector has been triggered. If you switch the main Power switch Off, then immediately switch it On again, sometimes the power does not come on. If this happens, wait one minute, then switch the power On again.
Blinking Slowly (On and off in a cycle of 8 sec.)	■ The cooling fan has stopped. Contact your NEC dealer for service.
Blinking very slowly (On and off in a cycle of 12 sec.)	■ The lamp is not turned on. • The projector was turned off and back on too quickly. Turn off the projector, wait one minute, then turn the projector back on. Or the lamp is burnt out.

Common Problems & Solutions

Problem	Check These Items
Does not turn on	• Check that the power cable is plugged in and that the power switch on the back panel is on. • Ensure that the lamp cover and lamp housing are installed correctly. (See page 81.) • Check the status light to see if the projector has overheated or the lamp usage exceeds 1100 hours.
No picture	• Use the menu icons to select your source (Video, S-Video, RGB or PC Card). (See pages 61 and 62.) • Ensure your cables are connected properly. • Use icons to adjust the brightness and contrast. • Remove the lens cap. • Is the POWER indicator blinking? • Reset the settings or adjustments to factory preset levels using the RESET icon on the Settings Menu.
Image isn't square to the screen	• Reposition the projector to improve its angle to the screen.
Picture is blurred	• Adjust the focus. (See page 36.) • Reposition the projector to improve its angle to the screen. • Ensure that the distance between the projector and screen is within the adjustment range of the lens.

Problem	Check These Items
Image is scrolling vertically, horizontally or both	• Use icons to select the source you want to input. • If PC signal is set up in Custom Setting, select corresponding Custom Setting (Custom 1, Custom 2, etc.).
Remote control does not work	• Install new batteries. (See page 83.) • Make sure there are no obstacles between you and the projector. • Stand within 23 feet (7m) of the projector.
Status indicator is lit or blinking	See the Status Light message chart on pages 89 and 90.
Cross color in RGB mode	If "Auto Picture" is off, turn it on. If "Auto Picture" is on, turn it off and balance the image with the Picture Adjustment icon and Fine Picture Adjustment icon.

To Contact Your NEC Service Representative, Call 1-800-836-0655

This section provides technical information about the MultiSync LT81/LT100 Projector's performance.

Optical

DMD™	Single Chip Digital Micromirror Device(DMD™), 800×600 dots (LT81) / 1024×768 dots (LT100)
Lens	Manual zoom, manual focus F 2.44 f =26-30 mm
Lamp	Metal halide lamp 280 W
Image Size	610-7620 mm (24-300 inches) diagonal
Projection Distance	1.2 – 12.3m

Electrical

Inputs	Video (NTSC / PAL / SECAM / NTSC 4.43) RGB LT81: (H : 15 – 60 kHz, V : 50 – 85 Hz) LT100: (H : 15 – 85 kHz, V : 50 – 85 Hz)
Video Bandwidth	RGB: 60 MHz
Color Reproduction	Full color, 16.7 million colors simultaneously.
Horizontal Resolution	NTSC / YCbCr 550 (LT81 : 500), PAL 350, SECAM 350, NTSC4.43 350 TV lines RGB LT81: 800 dots horizontal, 600 dots vertical LT100: 1024 dots horizontal, 768 dots vertical
Power Requirement	100 – 120 / 220 – 240 VAC, 50 / 60 Hz
Input Current	4.6 A (100 – 120 VAC) / 2.2 A (220 – 240 VAC)

Mechanical

Dimensions (LT81)	9.7" (W)×5.1" (H)×12.8" (D) / 246 mm (W)×130 mm (H)×325 mm (D) (Including lens hood and feet) 9.7" (W)×5.1" (H)×12.7" (D) / 246 mm (W)×130 mm (H)×310 mm (D) (Not including lens hood)
Dimensions (LT100)	9.8" (W)×5.6" (H)×13.4" (D) / 250 mm (W)×142 mm (H)×340 mm (D) (Including lens hood and feet) 9.8" (W)×5.6" (H)×12.6" (D) / 250 mm (W)×142 mm (H)×320 mm (D) (Not including lens hood)
Net Weight	LT81: 9.9 lbs / 4.5 kg LT100: 10.8 lbs / 4.9 kg
Operational Temperatures	Projector: 41° – 95°F (5° to 35°C), 30 – 85% humidity Remote control: 32° – 140°F (0° to 60°C) Remote mouse receiver: 32° – 140°F (0° to 60°C)
Regulations	UL Approved (UL 1950, CSA 950) Meets DOC Canada requirements Meets FCC Class A requirements

Digital Light Proccessing, DLP, Digital Micromirror Device and DMD are trademarks of Texas Instruments.

Cabinet Dimensions (LT81)

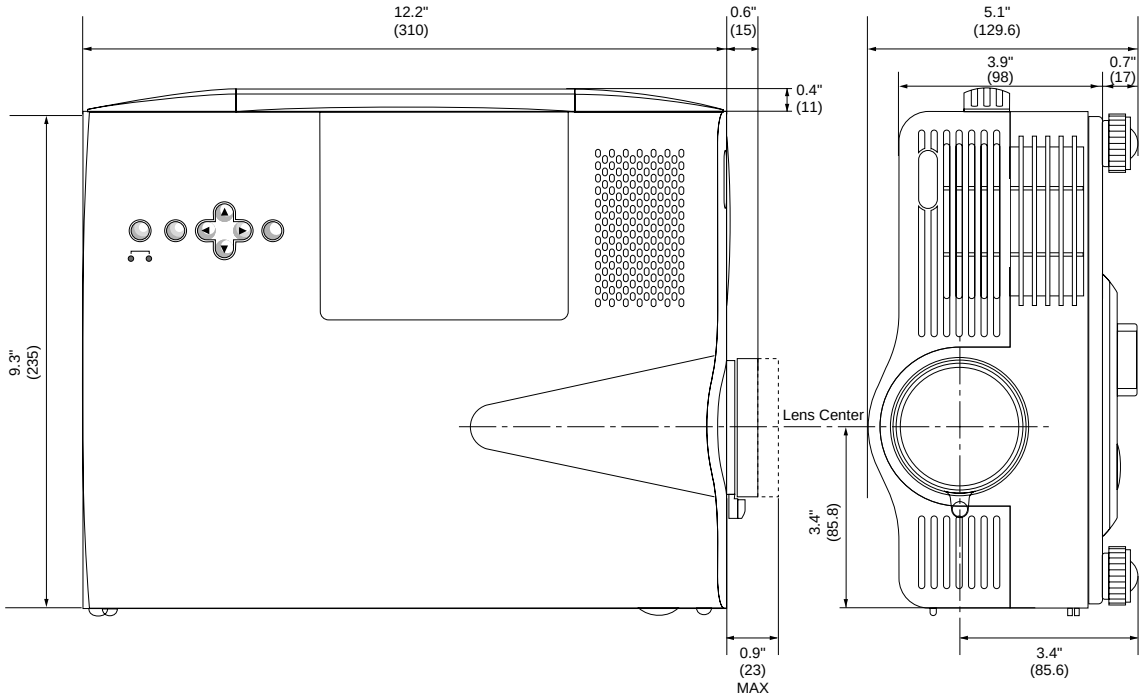

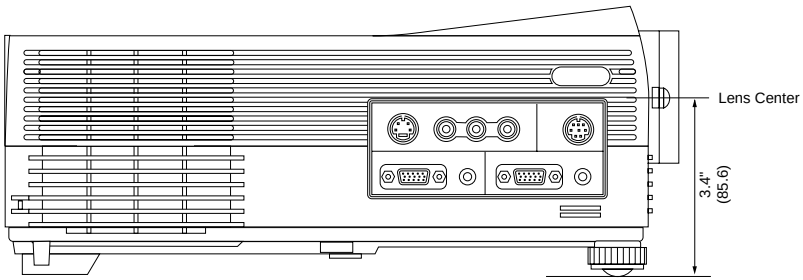

Unit : inch (mm)

Cabinet Dimensions (LT100)

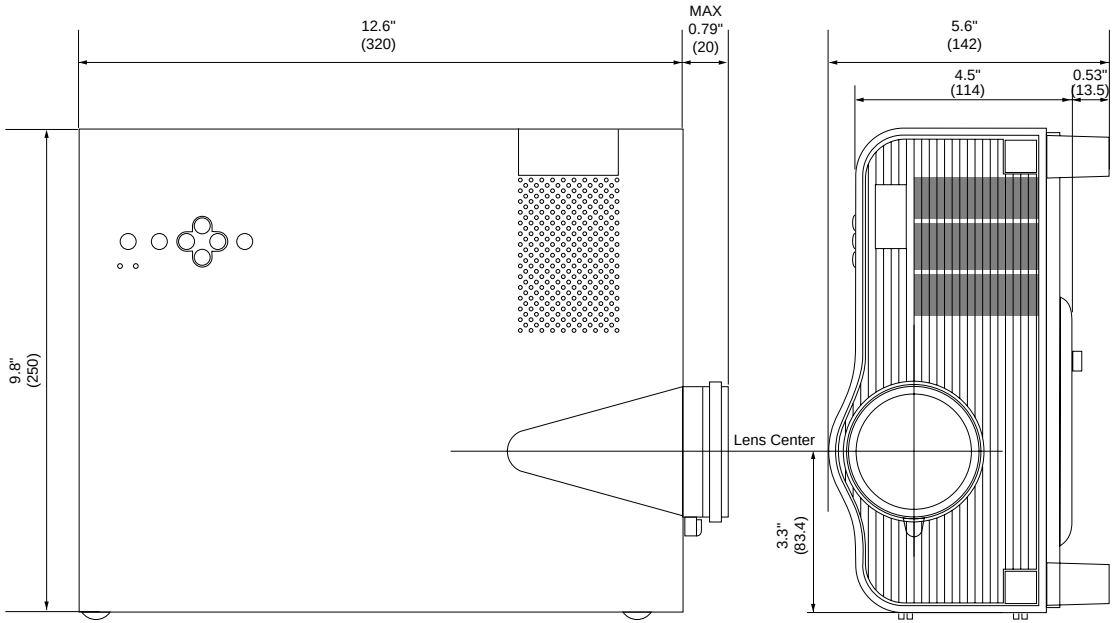

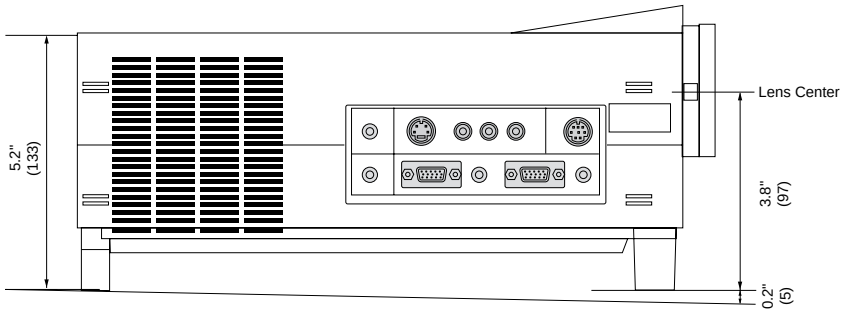

Unit : inch (mm)

D-Sub Pin Assignments

PC 15-Pin mini D-Sub

Pin No.	Signal to be connected
1	Red
2	Green
3	Blue
4	GND
5	GND
6	Red GND
7	Green GND
8	Blue GND
9	No Connection
10	Digital GND
11	GND
12	No Connection
13	Horizontal Sync
14	Vertical Sync
15	No Connection

PC 15-Pin mini D-Sub

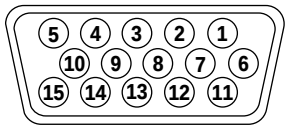

Timing Chart

Y/N	Signal	Resolution	Refresh Rate (Hz)	F.H. (kHz)	Dot Clk(MHz)
Y	NTSC	640×480	60	15.734	-
Y	PAL	768×576	50	15.625	-
Y	SECAM	768×576	50	15.625	-
Y	VESA	640×350	85.08	37.86	31.5
Y	IBM	640×400	70	31.47	25.175
Y	VESA	640×400	85.08	37.86	31.5
Y	MAC	640×400	66	35	30.24
Y	VESA	640×480	59.94	31.47	25.175
Y	IBM	640×480	60	31.47	25.175
Y	MAC	640×480	60	31.47	25.175
Y	MAC	640×480	66.7	34.97	31.334
Y	MAC	640×480	66.67	35	30.24
Y	VESA	640×480	72.81	37.86	31.5
Y	VESA	640×480	75	37.5	31.5
Y	IBM	640×480	75	39.375	31.49
Y	VESA	640×480	85.01	43.269	36
Y	IBM	720×350	70.09	31.469	28.322
Y	IBM	720×400	70.09	31.4469	28.322
Y	VESA	720×400	85.04	37.927	40
Y	IBM	720×350	87.85	39.44	35.5
Y	IBM	720×400	87.7	39.375	35.5
Y	VESA	800×600	56.25	35.16	36
Y	VESA	800×600	60.32	37.879	40
Y	VESA	800×600	72.19	48.077	50
Y	VESA	800×600	75	46.88	49.5
Y	VESA	800×600	85.06	53.674	56.25
Y	MAC	832×624	74.55	49.725	57.283
N	VESA	1024×768	43interlace	35.5	44.9
Y	VESA	1024×768	60	48.363	65
Y	VESA	1024×768	70.07	57.476	75
Y	IBM	1024×768	72.03	58.131	79
Y	MAC	1024×768	74.93	60.241	80
Y	VESA	1024×768	75.03	60.023	78.75
#	VESA	1024×768	85	68.677	94.5
Y	SGI	1024×768	60.4	49.7	70
#	MAC	1152×870	75.6	68.7	100
#	SUN	1152×900	65.95	61.769	92.94
#	SGI	1152×900	70.05	71.736	105.6
#	SGI	1280×1024	60	63.9	107.35
#	VESA	1280×1024	60.02	64.286	108
#	MAC	1280×1024	69.89	74.882	118.5
#	HP	1280×1024	72.01	78.125	135
#	VESA	1280×1024	75.03	79.976	135
#	SUN	1280×1024	76.11	81.13	135

1024×768 and 832×624 images are compressed into 800×600 on LT81.

1152×870, # 1152×900 and # 1280×1024 images are compressed into 1024×768 on LT100.

NOTE: *Images marked with a # are not supported by LT81.*

PC Control Command Reference

Command Codes

No.	Function	Code	Data	Description		
01	Video	03H	No	Same as remote		
02	RGB	04H	No	Same as remote		
03	S-Video	C6H	No	Same as remote		
04	PC CARD	27H	No	Same as remote		(available only when Viewer kit is connected to)
05	Power On	08H	No	Same as remote		
06	Power Off	14H	No	Same as remote		
07	Picture Mute	47H	No	Same as remote		
08	Audio Mute	45H	No			
09	Onscreen Mute	11H	No			
10	Reset	43H	No			
11	D Up	DEH	No	Same as remote		
12	D Down	DFH	No	Same as remote		
13	D Right	DCH	No	Same as remote		
14	D Left	DDH	No	Same as remote		
15	D Right Up	21H	No	Same as remote		
16	D Left Up	22H	No	Same as remote		
17	D Right Down	23H	No	Same as remote		
18	D Left Down	24H	No	Same as remote		
19	Freeze	4CH	No	Same as remote		
20	Slide +	4BH	No	Same as remote		(available only when PC CARD is selected)
21	Slide –	20H	No	Same as remote		(available only when PC CARD is selected)
22	Front Floor	33H	No			
23	Front Ceiling	34H	No			
24	Rear Floor	35H	No			
25	Rear Ceiling	36H	No			
26	Auto Start On	19H	No			
27	Auto Start Off	1AH	No			
28	Auto Picture On	1BH	No			
29	Auto Picture Off	1CH	No			
30	Input Mode Select	1DH	Yes	0	Standard VIDEO	(available only when VIDEO/S-VIDEO is selected)
				1	Doc Camera	
31	Gamma Select	1EH	Yes	0	Normal	
				1	Natural 1	
				2	Natural 2	

Command Codes (continued)

No.	Function	Code	Data	Description
32	Display Mode Select	1FH	Yes	0 Normal Aspect
				1 Wide Aspect
33	Power Management On	15H	No	
34	Power Management Off	16H	No	
35	Digital Zoom W	89H	No	Same as remote
36	Digital Zoom T	8AH	No	Same as remote
37	Brightness	60H	Yes	0 (00H) — 63 (3FH)
38	Contrast	62H	Yes	0 (00H) — 63 (3FH)
39	Color	64H	Yes	0 (00H) — 63 (3FH)
40	Tint	66H	Yes	-32 (E0H) — 31 (1FH)
41	Sharpness	68H	Yes	0 (00H) — 63 (3FH)
42	Audio Volume	6AH	Yes	0 (00H) — 63 (3FH)
43	Picture Adj	70H	Yes	-32 (FFE0H)— 31 (001FH)
44	Fine Picture	6EH	Yes	0 (00H) — 127 (7FH)
45	H Position	72H	Yes	-128 (80H) — 127 (7FH)
46	V Position	74H	Yes	-64 (C0H) — 63 (3FH)
47	Lamp Reset	3FH	No	
48	Lamguage Select	3DH	Yes	0 English
				1 German
				2 French
				3 Italian
				4 Spanish
				5 Swedish
				6 Japanese
WHITE BALANCE				
49	Sub Brightness R	75H	Yes	0 (00H) — 63 (3FH)
50	Sub Brightness G	76H	Yes	0 (00H) — 63 (3FH)
51	Sub Brightness B	77H	Yes	0 (00H) — 63 (3FH)
52	Sub Contrast R	78H	Yes	0 (00H) — 63 (3FH)
53	Sub Contrast G	79H	Yes	0 (00H) — 63 (3FH)
54	Sub Contrast B	7AH	Yes	0 (00H) — 63 (3FH)

Cable Connection

Communication Protocol

Baud rate:	**9600 bps**
Data length:	**8 bits**
Parity:	**No parity**
Stop bit:	**One bit**
X on/off:	**None**
Communications procedure:	**Full duplex**

If the CPU of the projector has received the data correctly, it returns an ACK(C5H). If the received data is not correct, the CPU returns a NAK(CAH), then the following status:

Receiving success:	**C5**
Receiving failure:	**CA Err**
Err 01:	**Command Error (command not supported)**
Err 02:	**Checksum Error**
Err 03:	**Busy (command not acceptable)**
Err 04:	**Parameter Error (parameter data abnormal)**

NOTE: *If failing in powering-on, the CPU returns the following NAKs:*

CA Err 1

Err 1 8X (Apply the corresponding bit.)

Bit 0: Lamp housing is not attached correctly
Bit 1: Fan stoppage
Bit 2: Overheated
Bit 3: Lamp lighting failure
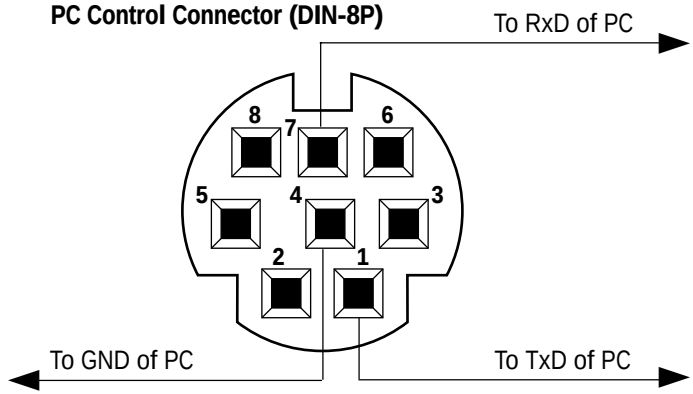
PC Control Connector (DIN-8P)