myprojectorlamps.com

The most trusted, dependable name in projector lamp sales.

http://www.myprojectorlamps.com

http://www.myprojectorlamps.ca

http://www.myprojectorlamps.eu

The following projector manual has not been modified or altered in any way.

Graphic Theatre

MultiSync™ GT2000™/GT2000R™

LCD Projector User's Manual

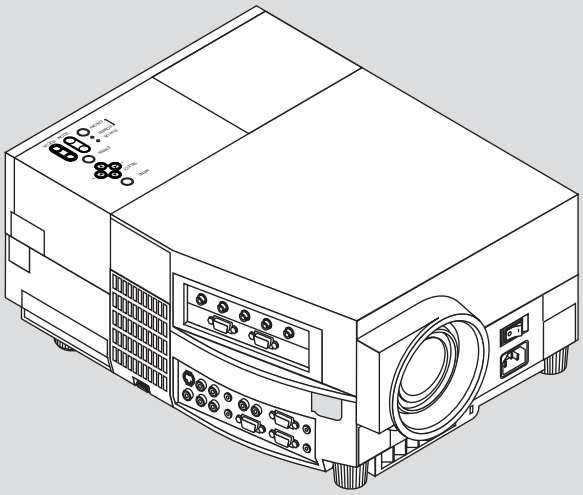

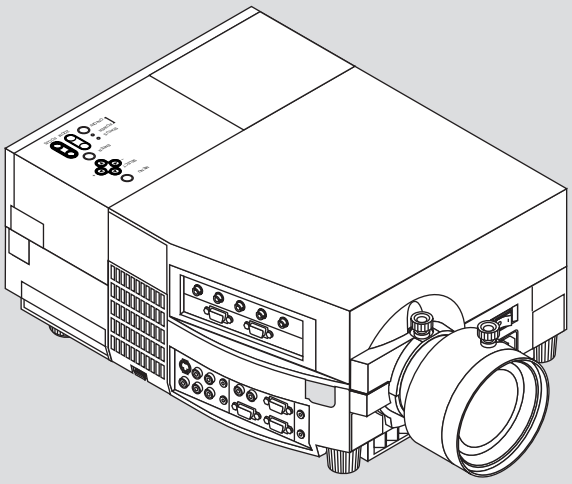

IMPORTANT INFORMATION

Precautions

Please read this manual carefully before using your NEC MultiSync GT2000/GT2000R LCD Projector and keep the manual handy for future reference.

Your serial number is located under the name plate label on the right side of your MultiSync GT2000/GT2000R . Record it here:

WARNING

TO PREVENT FIRE OR SHOCK, DO NOT EXPOSE THIS UNIT TO RAIN OR MOISTURE. DO NOT USE THIS UNIT'S GROUNDED PLUG WITH AN EXTENSION CORD OR IN AN OUTLET UNLESS ALL THREE PRONGS CAN BE FULLY INSERTED. DO NOT OPEN THE CABINET. THERE ARE HIGH-VOLTAGE COMPONENTS INSIDE. ALL SERVICING MUST BE DONE BY QUALIFIED NEC SERVICE PERSONNEL.

⚠ CAUTION

To turn off main power, be sure to remove the plug from power outlet. The power outlet socket should be installed as near to the equipment as possible, and should be easily accessible.

⚠ CAUTION

TO PREVENT SHOCK, DO NOT OPEN THE CABINET. NO USER-SERVICEABLE PARTS INSIDE. REFER SERVICING TO QUALIFIED NEC SERVICE PERSONNEL.

This symbol warns the user that uninsulated voltage within the unit may be sufficient to cause electrical shock. Therefore, it is dangerous to make any kind of contact with any part inside of the unit.

This symbol alerts the user that important information concerning the operation and maintenance of this unit has been provided. The information should be read carefully to avoid problems.

DOC Compliance Notice

This Class A digital apparatus meets all requirements of the Canadian Interference-Causing Equipment Regulations.

3. GSGV Acoustic Noise Information Ordinance:

The sound pressure level is less than 70 dB(A) according to ISO 3744 or ISO 7779.

Important Safeguards

These safety instructions are to ensure the long life of your LCD projector and to prevent fire and shock. Please read them carefully and heed all warnings.

Installation

1. For best results, use your LCD projector in a darkened room.
2. Place the projector on a flat level surface in a dry area away from dust and moisture.
3. Do not place your LCD projector in direct sunlight, near heaters or heat radiating appliances.
4. Exposure to direct sunlight, smoke or steam can harm internal components.
5. Handle your LCD projector carefully. Dropping or jarring can damage internal components.
6. Do not place heavy objects on top of the LCD projector.
7. If installing the LCD projector on the ceiling:
   a. The ceiling must be strong enough to support the LCD projector and the installation must be in accordance with any local building codes.
   b. The LCD projector must be installed by qualified NEC service personnel.

Power Supply

1. The LCD projector is designed to operate on a power supply of 100-120 or 220-240 V 50/60 Hz AC. Ensure that your power supply fits this requirement before attempting to use your LCD projector.
2. Handle the power cable carefully and avoid excessive bending. A damaged cord can cause electric shock or fire.
3. If the LCD projector is not to be used for an extended period of time, disconnect the plug from the power outlet.

Three types of power cable are supplied with this LCD projector: three-pin type for Japan, U. S. A. and Canada. Two-pin type for Germany.

RF Interference

WARNING

The Federal Communications Commission does not allow any modifications or changes to the unit EXCEPT those specified by NEC Technologies in this manual. Failure to comply with this government regulation could void your right to operate this equipment.
This equipment has been tested and found to comply with the limits for a Class A digital device, pursuant to Part 15 of the FCC Rules. These limits are designed to provide reasonable protection against harmful interference in a commercial installation. This equipment generates, uses and can radiate radio frequency energy and, if not installed and used in accordance with the instructions, may cause harmful interference to radio communications. Operation of this equipment in a residential area is likely to cause harmful interference in which case the user will be required to correct the interference at their own expense.

Cleaning

1. Unplug the LCD projector before cleaning.
2. Clean the cabinet periodically with a damp cloth. If heavily soiled, use a mild detergent. Never use strong detergents or solvents such as alcohol or thinner.
3. Use a blower or lens paper to clean the lens, and be careful not to scratch or mar the lens.
4. Clean the air filter with a vacuum cleaner after every 100 hours of operation.
   a. Clean the outside of the filter with a vacuum cleaner.
   b. Do not use water or any other liquid to clean the air filter.
   c. Do not operate your LCD projector without the air filter.

Lamp Replacement

- Perform lamp replacement in accordance with the instructions on page E-73.
- Be sure to replace the lamp when the Status light comes on. If you continue to use the lamp after 2000 hours of use, the lamp bulb may shatter, and pieces of glass may be scattered in the lamp case. Do not touch them as the pieces of glass may cause injury. If this happens, contact your NEC dealer for lamp replacement.
- Allow a minimum of ONE minute to elapse between turning the lamp off and on. High voltage is applied to the lamp immediately when the power is turned on. Therefore turning the power off and quickly back on may shorten the life of your lamp and result in damage to your LCD projector.

Fire and Shock Precautions

1. Ensure that there is sufficient ventilation and that vents are unobstructed to prevent the build-up of heat inside your LCD projector. Allow at least 3 inches (10cm) of space between your LCD projector and a wall.
2. Prevent foreign objects such as paper clips and bits of paper from falling into your LCD projector. Do not attempt to retrieve any objects that might fall into your projector. Do not insert any metal objects such as a wire or screwdriver into your LCD project. If something should fall into your projector, disconnect it immediately and have the object removed by a qualified NEC service person.
3. Do not place any liquids or plants (which require liquids) on top of your LCD projector.

- **Do not look into the lens while the projector is on. Serious damage to your eyes could result.**

⚠ ATTENTION

RISQUE D'ELECTROCUTION NE PAS OUVRIR

⚠ ATTENTION

Pour couper l'alimentation principale, s'assurer de retirer la fiche de la prise de courant.
La prise de courant murale doit être installée le plus près possible de l'équipement, et doit être facilement accessible.

Ce symbole a pour but de prévenir l'utilisateur de la présence d'une tension dangereuse, non isolée se trouvant à l'intérieur de l'appareil. Elle est d'une intensité suffisante pour constituer un risque d'électrocution. Eviter le contact avec les pièces à l'intérieur de cet appareil.

Ce symbole a pour but de prévenir l'utilisateur de la présence d'importantes instructions concernant l'entretien et le fonctionnement de cet appareil. Par conséquent, elles doivent être lues attentivement afin d'éviter des problèmes.

⚠ AVERTISSEMENT

AFIN DE REDUIRE LES RISQUES D'INCENDIE OU D'ELECTROCUTION, NE PAS EXPOSER CET APPAREIL A LA PLUIE OU A L'HUMIDITE. AUSSI, NE PAS UTILISER LA FICHE POLARISEE AVEC UN PROLONGATEUR OU UNE AUTRE PRISE DE COURANT SAUF SI CES LAMES PEUVENT ETRE INSEREES A FOND. NE PAS OUVRIR LE COFFRET, DES COMPOSANTES HAUTE TENSION SE TROUVENT A L'INTERIEUR. LAISSER A UN PERSONNEL QUALIFIE LE SOIN DE REPARER CET APPAREIL.

DOC avis de conformation

DOC avis de conformation

Cet appareil numérique de la classe A respecte toutes les exigences du Règlement sur le Matériel Brouilleur du Canada.

Importantes précautions de sécurité

Les points suivants sont des précautions de sécurité importantes destinées à garantir une longue durée de service du projecteur à écran à cristaux liquides (LCD) et afin d'éviter un incendie et des risques d'électrocution. S'assurer de lire attentivement ces précautions de sécurité et respecter tous les avertissements décrits ci-dessous.

Installation

1. Pour un fonctionnement optimal, utiliser le projecteur à écran à cristaux liquides (LCD) dans une pièce sombre.
2. Placer le projecteur à écran à cristaux liquides (LCD) sur une surface à niveau et dans un endroit sec exempt de poussières et d'humidité.
3. Ne pas placer le projecteur à écran à cristaux liquides (LCD) en plein soleil, près d'appareils ménagers ou d'autres appareils de chauffage.
4. La fumée, la vapeur et l'exposition aux rayons directs du soleil risquent de détériorer sérieusement les composantes internes.
5. Eviter des manipulations brusques lors du déplacement du projecteur à écran à cristaux liquides (LCD), car un choc violent pourrait endommager les composantes internes.
6. Ne pas deposer d'objets lourds sur le dessus du projecteur à écran à cristaux liquides (LCD).
7. Lors de l'installation du projecteur à écran à cristaux liquides (LCD) au plafond, respecter les instructions suivantes.
   a. Le plafond doit être suffisamment solide pour supporter le poids du projecteur à écran à cristaux liquides (LCD) et il doit être installé selon les codes de construction locaux.
   b. Le projecteur à écran à cristaux liquides (LCD) doit être installé par un personnel qualifié.

Alimentation

1. Le projecteur à écran à cristaux liquides (LCD) est conçu pour fonctionner à 100-120 ou 220-240VCA 50/60Hz. S'assurer que la tension d'alimentation locale satisfait cette exigence avant d'utiliser le projecteur.
2. Manipuler le câble d'alimentation avec précaution et éviter de le plier excessivement. Un cordon endommagé risque de provoquer une électrocution ou un incendie.
3. Si le projecteur à écran à cristaux liquides (LCD) n'est pas utilisé pendant une période prolongée, retirer la fiche de la prise secteur.

Nettoyage

1. Débrancher le projecteur à écran à cristaux liquides (LCD) de la prise d'alimentation avant le nettoyage.
2. Nettoyer régulièrement le coffret avec un chiffon doux. S'il y a des taches tenaces, utiliser une solution d'un détergent doux. Ne jamais utiliser de détergents puissants ou des solvants, tel que l'alcool ou un diluant pour nettoyer le projecteur à écran à cristaux liquides (LCD).
3. Utiliser un appareil diffuseur chauffant ou du papier de nettoyage de lentille disponible dans le commerce pour nettoyer la lentille.

   Ne pas frapper ou rayer la surface de la lentille, car des défauts risquent de se produire sur la surface de la lentille.
4. Nettoyer le filtre à air toutes les 100 heures.

   a. Nettoyer seulement l'extérieur avec un aspirateur.

   b. Ne pas nettoyer le filtre à air avec de l'eau ou un liquide.

   c. Ne pas utiliser le projecteur à écran à cristaux liquides (LCD) sans le filtre à air.

Remplacement de la lampe

- Effectuer le remplacement de la lampe suivant les instructions de la page 75.
- Assurez-vous de bien remplacer la lampe lorsque le voyant d'usure s'allume. Si vous continuez d'utiliser la lampe après 2000 heures d'utilisation, l'ampoule peut se briser et des brisures de verre peuvent être éparpillées dans le compartiment de la lampe. Ne les touchez pas car elles peuvent vous blesser. Dans ce cas, contactez votre revendeur NEC afin de procéder au remplacement de la lampe.
- Attendez minimum UNE minute après avoir éteint la lampe avant de la rallumer. Une haute tension est immédiatement appliquée à la lampe quand celle-ci est mise sous tension. Par conséquent, éteindre, puis tout de suite rallumer peut abréger la vie de votre lampe et endommager votre projecteur LCD.

Précautions pour éviter un incendie ou une électrocution

1. Une ventilation appropriée doit être assurée afin d'éviter une accumulation de chaleur à l'intérieur du projecteur à écran à cristaux liquides (LCD). S'assurer que les trous de ventilation ne sont pas obstrués. Laisser un espace d'au moins 10 cm (quatre pouces) entre le projecteur à écran à cristaux liquides (LCD) et les murs.
2. Eviter que des objets étrangers, des agrafes, des clous et du papier, par exemple, pénètrent à l'intérieur du projecteur à écran à cristaux liquides (LCD). Ne pas essayer de récupérer ces objets soi-même ou ne pas insérer des objets métalliques, des fils et des tourne-vis, par exemple à l'intérieur du projecteur à écran à cristaux liquides (LCD). Si un objet tombe à l'intérieur du projecteur à écran à cristaux liquides (LCD), le débrancher immédiatement et contacter un dépanneur qualifié pour retirer l'objet.
3. Ne pas placer des liquides sur le dessus du projecteur à écran à cristaux liquides (LCD).

- **Ne regardez pas à l'intérieur de l'objectif lorsque le projecteur est en marche. Vous risquez de vous blesser gravement aux yeux.**

LIMITED WARRANTY (USA AND CANADA ONLY)

NEC MultiSync® LCD Projector Products

NEC Technologies, Inc. (hereafter NECTECH) warrants this product to be free from defects in material and workmanship under the following terms.

This warranty extends only to you, the original purchaser, and is not transferable. This warranty extends only to products and distributed by us in the U.S.A or Canada.

HOW LONG IS THE WARRANTY?

Parts and labor are warranted for (2) two years from the date of the first customer purchase. The lamp is warranted for 2000 hours of operating time or six months, whichever comes first.

WHO IS PROTECTED?

This warranty may be enforced only by the first purchaser.

WHAT IS COVERED AND WHAT IS NOT COVERED

Except as specified below, this warranty covers all defects in material or workmanship in this product. The following are not covered by the warranty:

1. Any product which is not distributed in the U.S.A. or Canada by NECTECH or which is not purchased in the U.S.A. or Canada from an authorized NECTECH dealer. For a listing of authorized dealers please contact NECTECH at 800-836-0655.
2. Any product on which the serial number has been defaced, modified or removed. NECTECH'S LIABILITY FOR ANY DEFECTIVE PRODUCT IS LIMITED TO THE REPAIR OR REPLACEMENT OF THE PRODUCT AT OUR OPTION. REPLACEMENT PRODUCTS MAY BE NEW OR 'LIKE NEW'.
3. NECTECH SHALL NOT BE LIABLE FOR : Damage, deterioration or malfunction resulting from:
   a. Accident, misuse, abuse, neglect, fire, water, lightning or other acts of nature, unauthorized product modification, or failure to follow instructions supplied with the product.
   b. Repair or attempted repair by anyone not authorized by NECTECH.
   c. Any shipment of the product (claims must be presented to the carrier).
   d. Removal or installation of the product.
   e. Any other cause which does not relate to a product defect.
4. Cartons, carrying cases, batteries, external cabinets, magnetic tapes, or any accessories used in connection with the product.

WHAT NEC WILL COVER

We will pay labor and material expenses for covered items. But we will not pay for the following:

1. Removal or installation charges.
2. Costs of initial technical adjustments (set-up), including adjustment of user controls. These costs are the responsibility of the NECTECH dealer from whom the product was purchased.
3. Payment of shipping charges.

HOW YOU CAN GET WARRANTY SERVICE

1. To obtain service on your product, consult the dealer from whom you purchased the product.
2. Whenever warranty service is required, the original dated invoice (or a copy) must be presented as proof of warranty coverage. Please be prepared to describe or demonstrate the problem to your dealer.
3. For the name of the nearest NECTECH authorized service center, call NECTECH at 800-836-0655.

LIMITATION OF IMPLIED WARRANTIES

ALL IMPLIED WARRANTIES, INCLUDING WARRANTIES OF MERCHANTABILITY AND FITNESS FOR A PARTICULAR PURPOSE, ARE LIMITED IN DURATION TO THE LENGTH OF THIS WARRANTY.

EXCLUSION OF DAMAGES

NECTECH'S LIABILITY FOR ANY DEFECTIVE PRODUCT IS LIMITED TO THE REPAIR OR REPLACEMENT OF THE PRODUCT AT OUR OPTION. NECTECH SHALL NOT BE LIABLE FOR:

1. DAMAGE TO OTHER PROPERTY CAUSED BY ANY DEFECTS IN THIS PRODUCT, DAMAGES BASED UPON INCONVENIENCE, LOSS OF USE OF THE PRODUCT, LOSS OF TIME, COMMERCIAL LOSS; OR
2. ANY OTHER DAMAGES, WHETHER INCIDENTAL, CONSEQUENTIAL OR OTHERWISE. SOME STATES DO NOT ALLOW LIMITATIONS ON HOW LONG AN IMPLIED WARRANTY LASTS AND/OR DO NOT ALLOW THE EXCLUSION OR LIMITATION OF INCIDENTAL OR CONSEQUENTIAL DAMAGES, SO THE ABOVE LIMITATIONS AND EXCLUSIONS MAY NOT APPLY TO YOU.

HOW STATE LAW RELATES TO THE WARRANTY

This warranty gives you specific legal rights, and you may also have other rights which vary from state to state.

FOR MORE INFORMATION, TELEPHONE 800-836-0655

NEC TECHNOLOGIES, INC.
1250 N. Arlington Heights Road, Suite 500
Itasca, Illinois 60143-1248

NOTE: *All products returned to NECTECH for service MUST have prior approval. To get approval, call NEC Technologies at 800-836-0655.*

TABLE OF CONTENTS

1. Introduction

What's In The Box? E-8
Getting To Know Your MultiSync GT2000/GT2000R LCD Projector E-9
Projector Cabinet E-9
Top Features E-10
Terminal Panel Features E-11
Remote Control Features E-13

2. Installation

Setting Up Your MultiSync GT2000/GT2000R LCD Projector E-17
Using A Tabletop Or Cart E-18
Adjusting The Focus On GT2000R E-18
Ceiling Installation E-21
Reflecting The Image/ Rear Screen Projection (GT2000R Only) E-23

3. Connections

Wiring Diagram E-25
PC Control E-26
Connections With ISS-6020 ..... E-28
Connecting One ISS-6020 ..... E-28
Connecting Multiple ISS-6020s E-29
Connecting Multiple Projectors E-30
Operating Multiple Projectors With Remote Control E-31
External Control E-32

4. Operation

General Controls E-34
Set-Up E-36
Adjusting The Picture And The Audio E-44
Adjusting The Screen E-49
Using User Memory And Channel Memory E-56
Controlling Switcher E-70

4. Maintenance

Replacing The Lamp E-73
Cleaning And Replacing The Filter E-74
Remote Control Battery Installation E-74

5. Troubleshooting

Status Light Messages E-77
Common Problems & Solutions E-78

6. Specifications

Optical E-79
Electrical E-79
Mechanical E-79
D-Sub Pin Assignments E-81
Displayable Video Signals E-82
PC Control Command Reference E-83

1 INTRODUCTION

What's In The Box?

Make sure your box contains everything listed. If any pieces are missing, contact your dealer. Please save the original box and packing materials if you ever need to ship your MultiSync GT2000/ GT2000R LCD Projector.

- NEC MultiSync GT2000/GT2000R LCD Projector
- Remote Control And Cables
- Power Cable
- Two AAA Batteries
- User's Manual
- String and Rivet (GT2000 only)
- Ferrite Clamp

Power cable (3 types)

For Germany

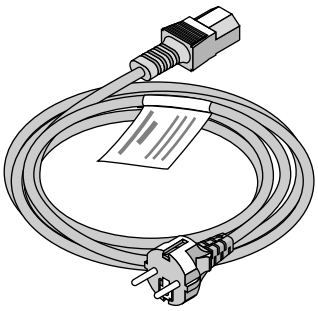

For Japan

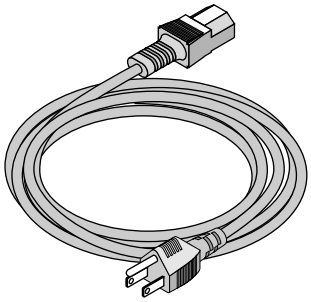

For USA or Canada

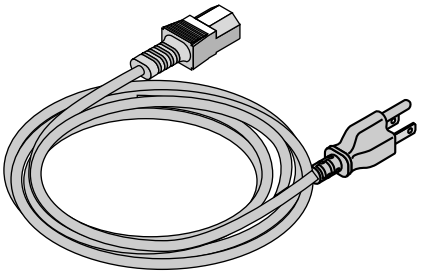

Remote control

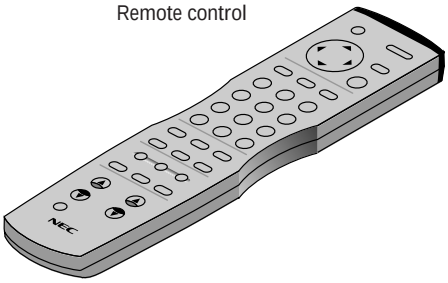

Remote cable

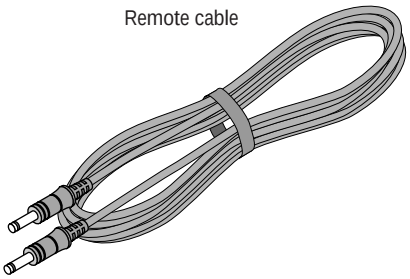

String and rivet (GT2000 only)

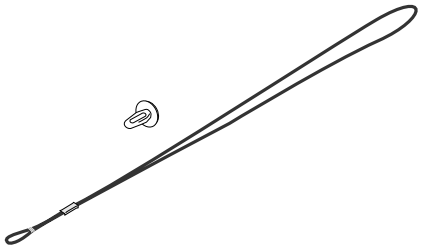

Batteries (AAA × 2)

Ferrite clamp for remote cable

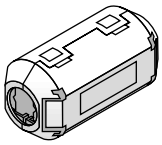

User' s manual (English / German and Japanese)

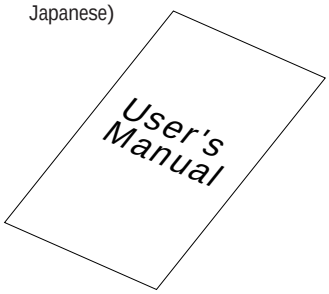

Lens cap (attatched to the projector at the factory)

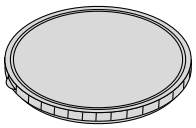

For GT2000

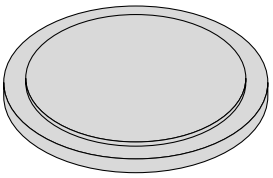

For GT2000R

Getting To Know Your MultiSync GT2000/GT2000R LCD Projector

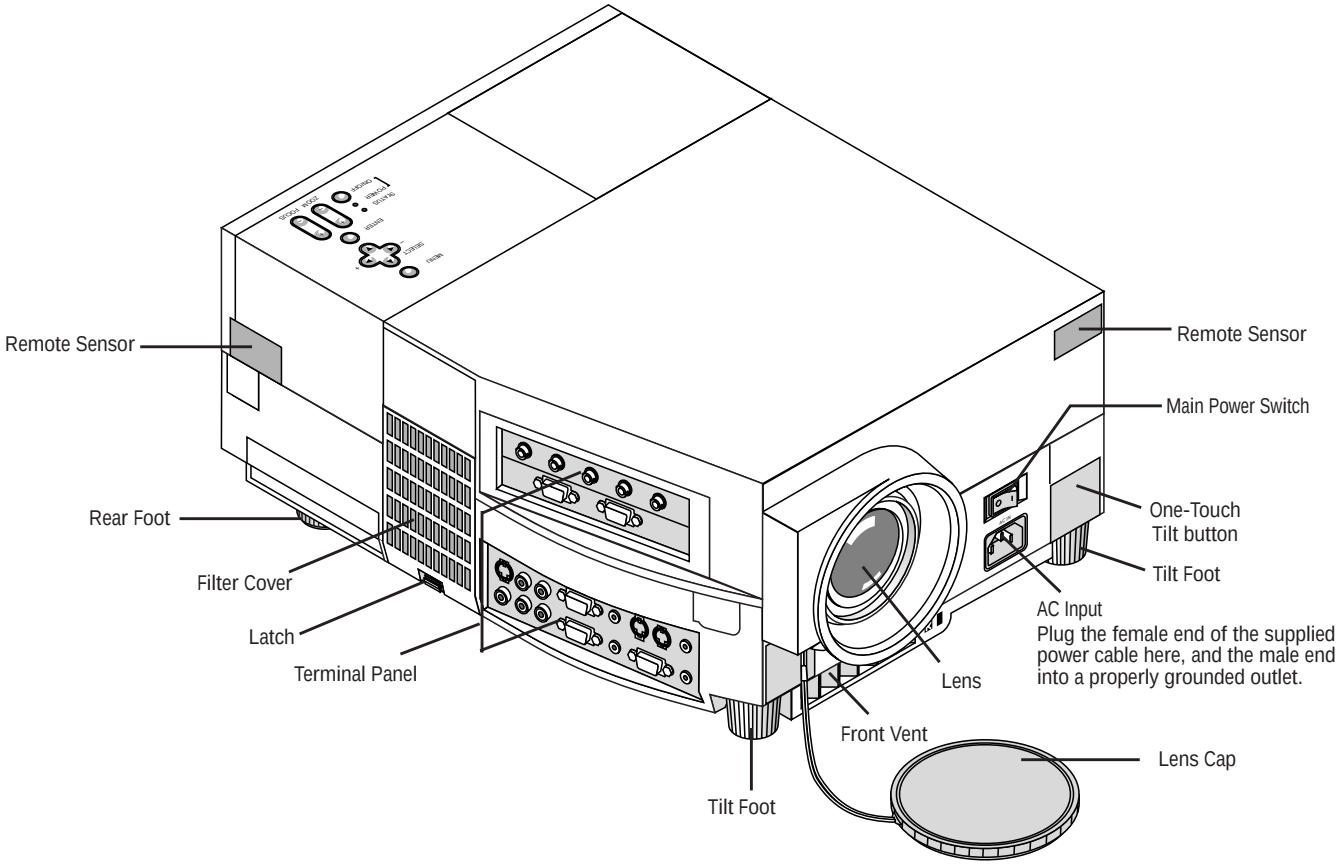

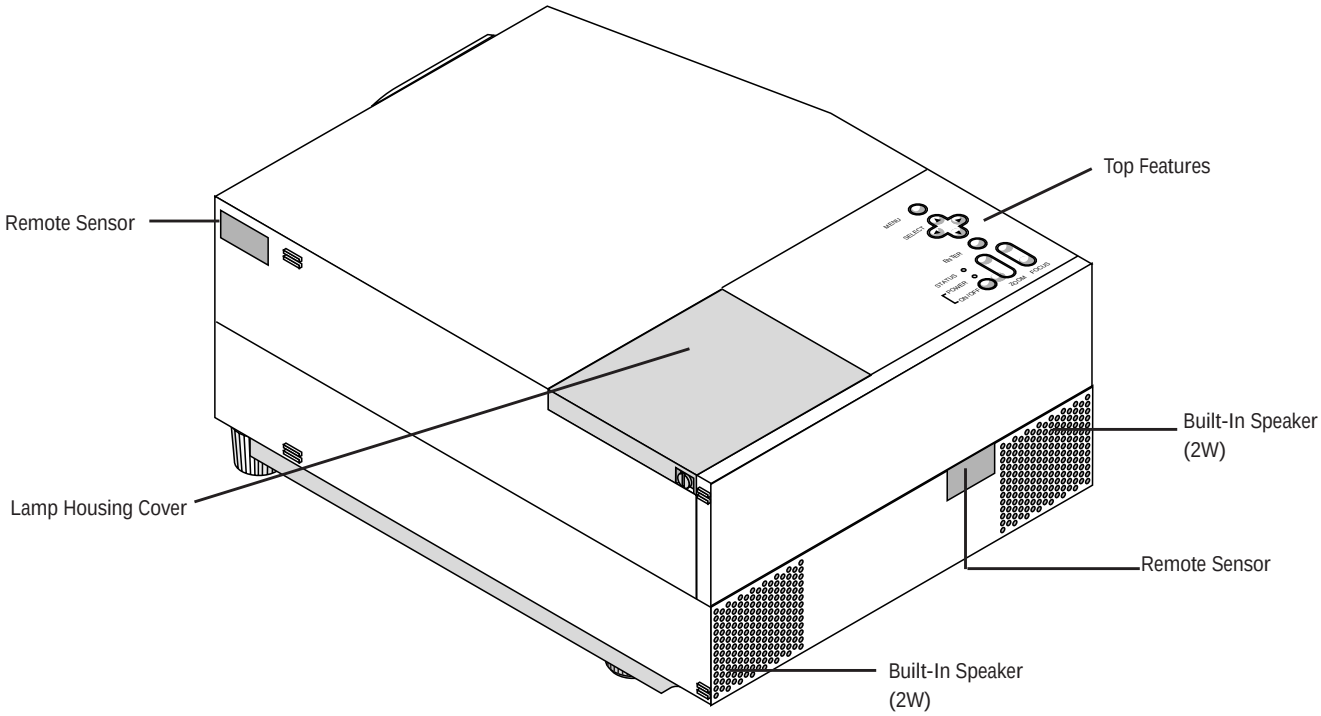

Top Features

1 Power Button

Use this button to turn the power on and off when the Main Power Switch is on and the LCD projector is in standby.

To turn off the projector, press and hold this button for at least 2 seconds.

2 Menu Button

Displays the on- screen menu. A press of this button while the on-screen menu is displayed will move back to the previous menu step.

3 Select (▲▼◀▶) / (+)(–) Buttons

Select: (▲▼◀▶) After you press the “Menu” button, use the ▲ or ▼ button to select the menu item you wish to adjust.

(+)(–): Use these buttons while you' re in the adjustment mode to change the level of a selected menu item. These buttons are also used to set an item in the other menus.

4 Enter Button

Executes your menu selection.

5 (+) (–) Zoom Buttons

Press the (+) button to make the image larger; press (–) to make the image smaller. (This feature is not available on GT2000R.)

6 (+) (–) Focus Buttons

Press the (+) or (–) buttons to focus an image. (This feature is not available on GT2000R.)

7 Power Indicator

When this indicator is green, the LCD projector is on; when the indicator is amber, it is in standby mode.

8 Status Indicator

When this is lit red continually, it's warning you that the projection lamp has exceed 2000 hours of service. After this light appears, it is advisable to replace the projection lamp as soon as possible.(See page E-73)
In addition the message "LAMP USAGE XX HOURS" appears continually when the on-screen menu is not displayed.
If this light blinks red rapidly, it indicates that either the lamp cover or filter cover is not attached properly. See the Status Light Messages on page E-77 for more details.
When the GT2000/GT2000R is used with the ISS-6020 switcher in bundled operation, this indicator lights green.
The green light blinks when the ISS-6020 Switcher is not connected with the projector correctly.

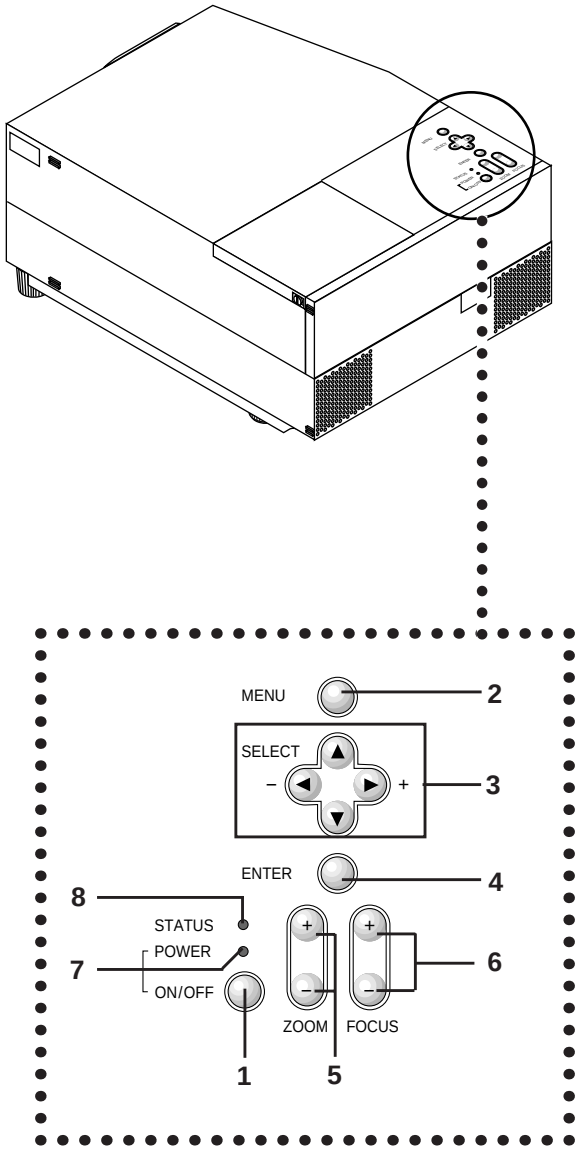

Terminal Panel Features

This panel is located on the left side and is where you connect your cables.

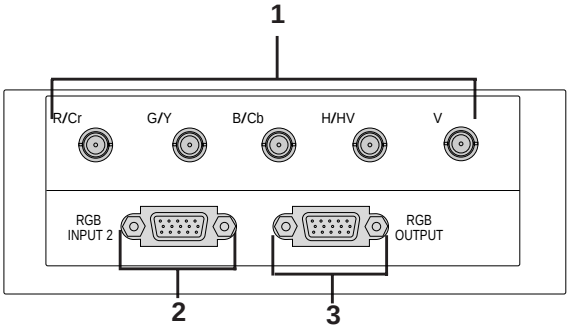

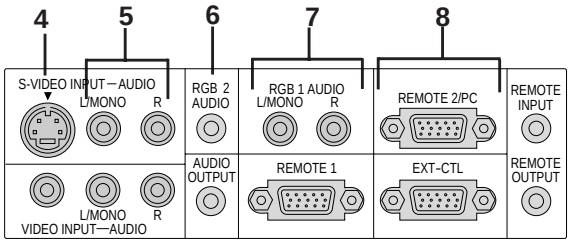

1 R/Cr, G/Y, B/Cb, H/ HV and V [RGB 1] Inputs (BNC)

Connect R,G,B,H (Horizontal sync) and V (Vertical sync) outputs of external equipment such as the NEC ISS-6020 Switcher or IPS-4000.

If using a component with a combined sync (SYNC) output, connect it to the H/V terminal. When using luminance and color-difference signals of HDTV and DVD, connect Pr/Cr to the R, Y to the G and Pb/Cb to the B input of the projector.

2 RGB (Y, Cb,Cr) Input 2 Connector (Mini D-Sub 15 pin)

Connect your PC, DVD player with Y/Cb/Cr outputs or other RGB equipment such as IBM or compatible computers. The optional Component V. Cable is required for Y/Cb/Cr input connection.

3 RGB Output Connector (Mini D-Sub 15 pin)

You can use this connector to loop your computer image to an external monitor from either the RGB 1 or RGB 2 input source.

4 S-Video Input

Here is where you connect the S-Video input from an external source such as a VCR or laser disc player.

NOTE: *S-Video provides more vivid color and higher resolution than the traditional composite video format.*

5 Left Channel/Mono Audio Input Jack (RCA)

This is your left channel audio input for stereo sound coming from S-Video equipment or audio system. This also serves as your monaural audio input.

Right Channel Audio Input Jack
This is your right channel audio input for stereo sound.

6 RGB 2 Audio Input Mini Jack

You can use this connector to output sound from the RGB 2 Input source.

7 RGB 1 Left Channel/Mono Audio Input Jack (RCA)

This is your left channel audio input for stereo sound coming from the RGB Input 1 source.

This also serves as your monaural audio input.

RGB 1 Right Channel Audio Input Jack
This is your right channel audio input for stereo sound from the RGB Input 1 source.

8 Remote 2/PC Connector (Mini D-Sub 15 pin)

Use this connector to attach an RS-232C cable when a computer or similar device will control the projector or when the projector is used with multiple projectors.

9 Remote Input Mini Jack

Connect your remote control cable here for wired operation.

Remote Output Mini Jack

This terminal enables you to loop up to 64 projectors with the same remote control operation.

10 Video Input (RCA)

Connect a VCR, DVD player, laser disc player, or document camera here to project video.

11 Left Channel/Mono Audio Input Jack (RCA)

This is your left channel audio input for stereo sound coming from video equipment or audio system. This also serves as your monaural audio input.

Right Channel Audio Input Jack

This is your right channel audio input for stereo sound.

12 Audio Output Mini Jack

Connect additional external speakers here to listen to audio coming from the RGB 1, RGB 2, Video or S-Video input.

13 REMOTE 1 Connector (Mini D-Sub 15 pin)

Connect the control cable (available as an option) here when the projector is used with the optional ISS-6020 or with multiple projectors.

NOTE: *The ISS-6020/ISS-6020G Switcher is compatible with this projector.*

14 External Control Connector (Mini D-Sub 15 pin)

This connector is for switch closure control or other external controller.

15 Built-in Security Slot ( )

This security slot supports the MicroSaver® Security System.

MicroSaver® is a registered trademark of Kensington Microware Inc. The logo is trademarked and owned by Kensington Microware Inc.

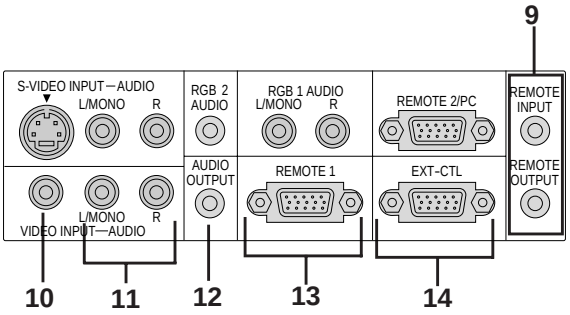

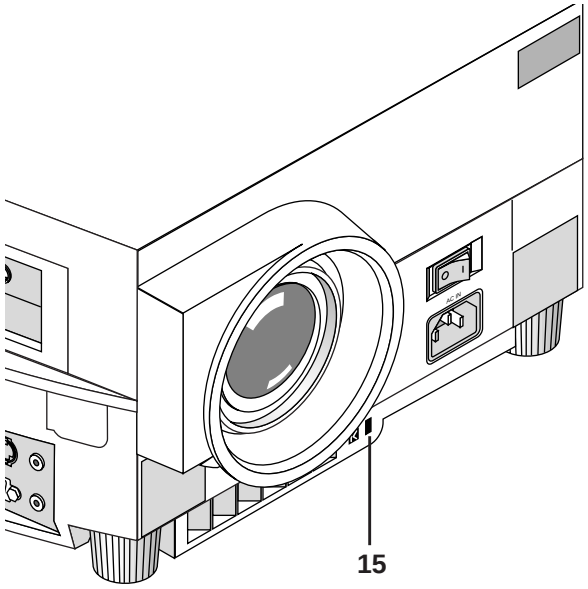

Remote Control Features

You can use your remote control with the cable or wireless to operate your MultiSync GT2000/GT2000R LCD Projector.
If you want to use your remote control with the cable, connect one end of the cable to the jack on the remote control and the other end to the Terminal Panel.

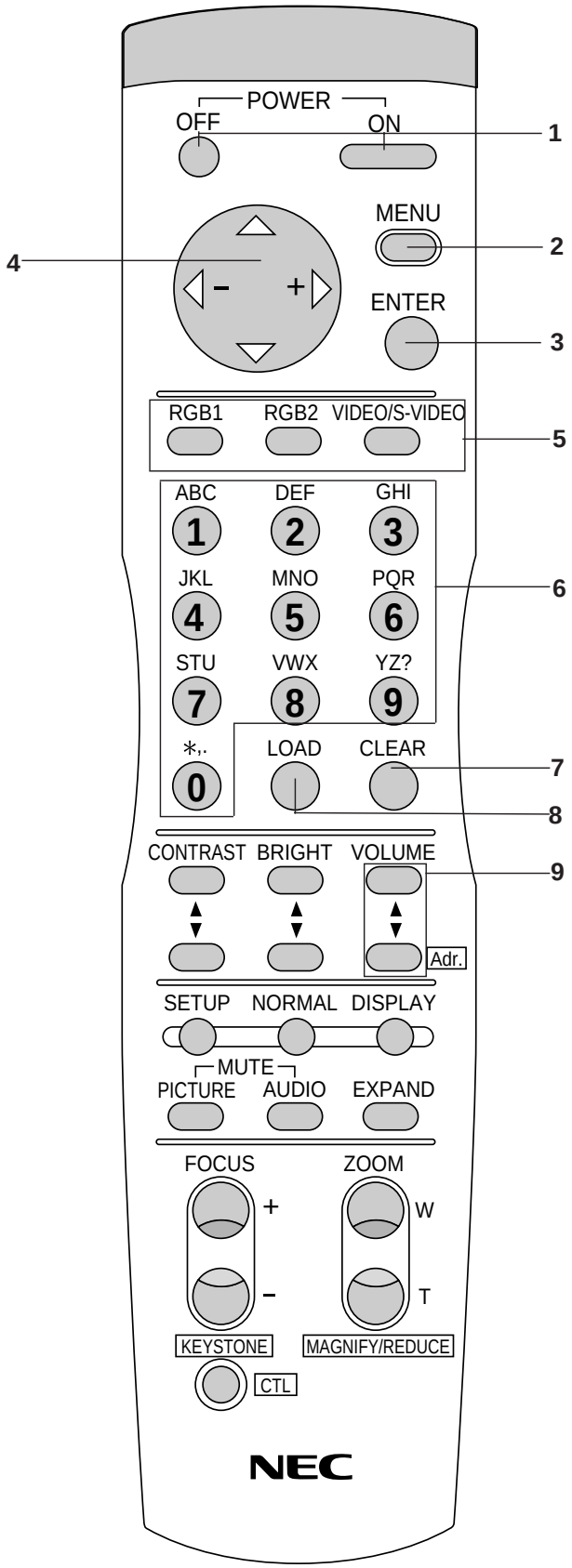

1 Power ON and OFF

If your main power switch on the front is turned on, you can use this button to turn your projector on and off.

2 Menu

Press this button to call up the On-Screen Menu so you can adjust and set the image.
To return to the main menu from a submenu or to turn off the main menu, press this button again.

3 Enter

This button activates items selected from the on-screen menu.

4 Cursor

Use this control to select items from the on-screen menu.

5 Input

Select your input source by pressing the RGB1, RGB2, or VIDEO/S-VIDEO button. The VIDEO/S-VIDEO button toggles between VIDEO and S-VIDEO. Also you can select RGB or YCbCr directly by pressing CTL and RGB1(or RGB2) buttons while you are in the RGB mode.

6 Number

Use one of these buttons to specify the memory location or enter to name a signal during input registration.

7 Clear

Press this button to clear any adjustments in progress.

8 Load

Press any number button and then this button to activate settings you have stored previously from 01 to 100 of the memory list.

9 Volume (Address with CTL)

This adjusts the volume of the built-in speaker.
Use the Volume(-) with the CTL button to display the Remote Control Unit Address on screen to specify the remote control address.

10 Contrast

Adjusts the image' s contrast for room conditions.

11 Brightness

Adjusts the image' s brightness for room conditions.

12 Setup

Press this button and then press the ENTER button to return to the factory preset. Also you can search the memory by pressing the SETUP button and then the LOAD button.

13 Normal

This button returns the brightness, contrast or white balance to its factory default settings.

14 Display

Press this button to identify the source being projected.

15 Picture Mute

This button turns off the image and the on-screen message for a short period of time. Press again to restore it.

16 Audio Mute

This button temporarily shuts off or restores the sound.

17 Expand (Digital Zoom Function)

Press this button to turn the image enlargement control on or off.

18 Focus (Keystone with CTL)

Press the (+) or (-) button to adjust the focus. (These buttons are not available on GT2000R.)

Use these buttons with the CTL button to correct the keystone (trapezoidal) distortion, and make the image square.

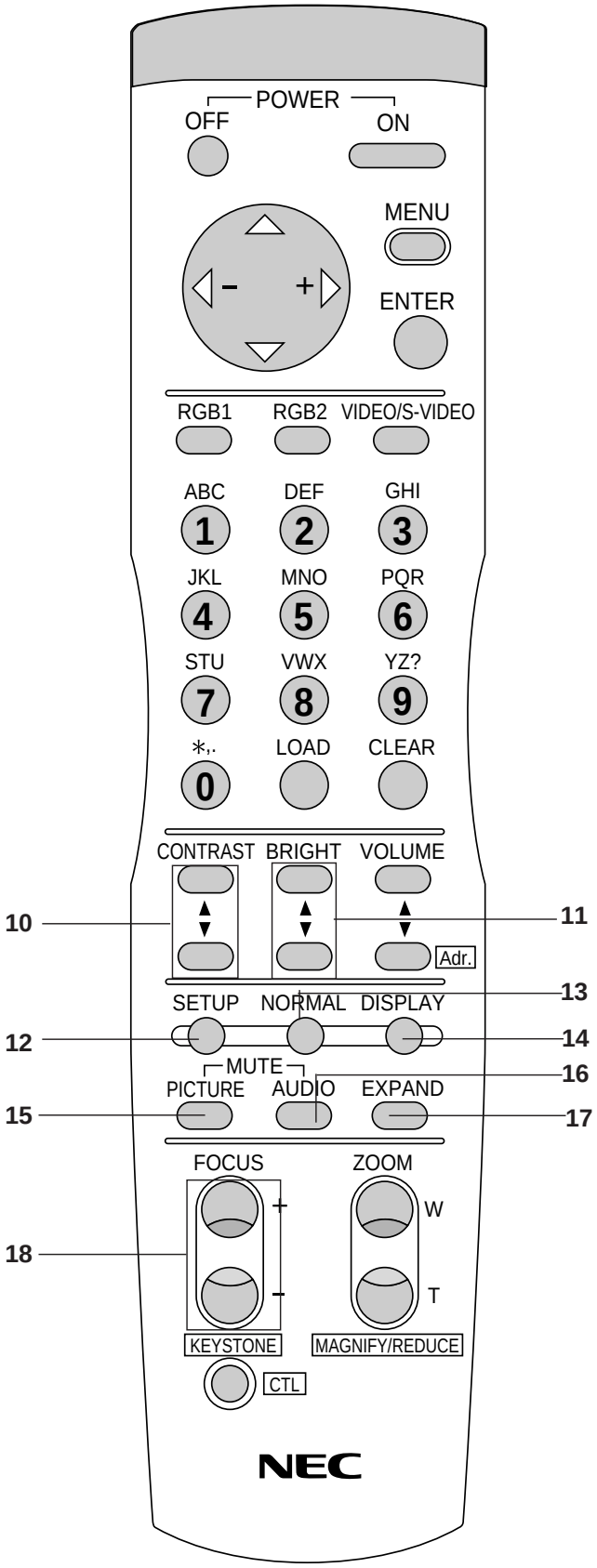

19 Zoom (Magnify/Reduce with CTL)

Press the (W) or (T) button to zoom in or zoom out. (These buttons are not available on GT2000R.)
Use these buttons with the CTL button to adjust the image size.

20 CTL(Control)

This button is pressed simultaneously with others (FOCUS, ZOOM, VOLUME, RGB1, RGB2, KEYSTONE, MAGNIFY, REDUCE, Adr. and direct selection of RGB and YCbCr) to operate functions.

21 Remote Jack

Connect your remote control cable here for wired operation.

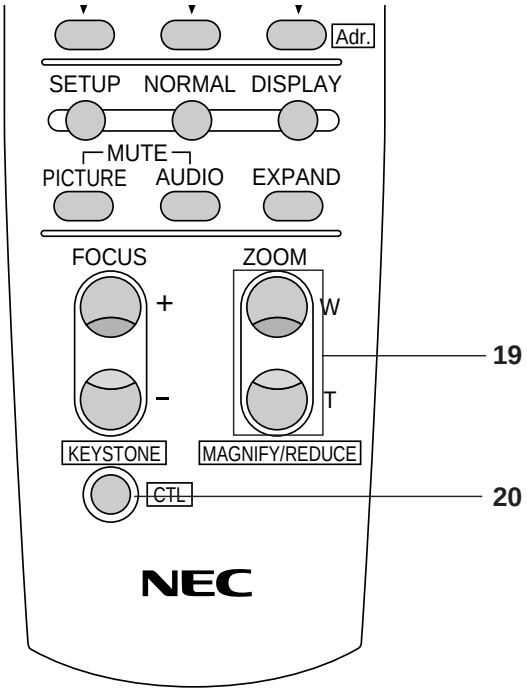

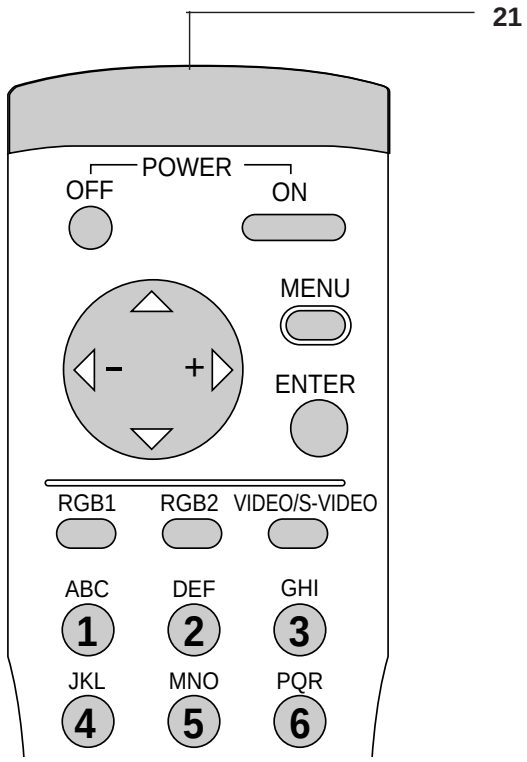

Remote Control Notes

- Use the remote control within a distance of about 7m (23feet) and at an angle of 30˚ above, below, to the left and to the right of the remote control sensor located at the front of the main unit.
- The remote control system may not function when direct sunlight or strong illumination strikes the remote control sensor of the main unit, or when there is an obstacle in the path.
- When remote control buttons are pressed and held, main unit function keys may not operate.
- Do not subject to strong shock.
- Do not allow water or other liquid to splash on the remote control. If the remote control gets wet, wipe it dry immediately.
- Avoid exposure to heat and steam.
- Remove the batteries from the remote control when the remote control is not going to be used for a long period.

You cannot operate the projector using the remote control if:

• the remote ID is not set to [00].

• the remote ID is not the same as the projector ID.

See page E-43 for setting remote ID and page E-38 for setting projector ID.

Attaching the supplied ferrite clamp

The ferrite clamp is provided with this projector in order to reduce electromagnetic interference that may cause interference to radio communication.

1. Push the catch and open the ferrite clamp.

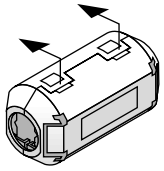

2. Draw the remote cable through the hole and wind the remote cable around the ferrite clamp two times, then close the ferrite clamp. Place the ferrite clamp as closely to the end of the cable that plugs into the projector as possible.

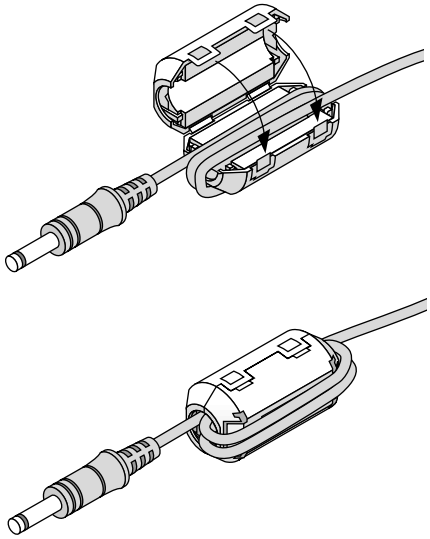

2 INSTALLATION

This section describes how to set up your MultiSync GT2000/ GT2000R LCD projector and how to connect video and audio sources.

Setting Up Your MultiSync GT2000/ GT2000R LCD Projector

Your MultiSync GT2000/GT2000R LCD Projector is simple to set up and use. But before you get started, you must first:

1. Determine the image size
2. Set up a screen or select a non-glossy white wall onto which you can project your image.

Carrying The LCD Projector Ensure that the power cord and any other cables connecting to video sources are disconnected before moving the projector. When moving the projector or when it is not in use, cover the lens with the lens cap.

Selecting A Location The further your LCD projector is from the screen or wall, the larger the image. The minimum size the image can be is approximately 0.5 m (20") measured diagonally when the projector is roughly 1.0 m from the wall or screen. The largest the image can be is 7.6 m (300") when the projector is about 12.0 m from the wall or screen.

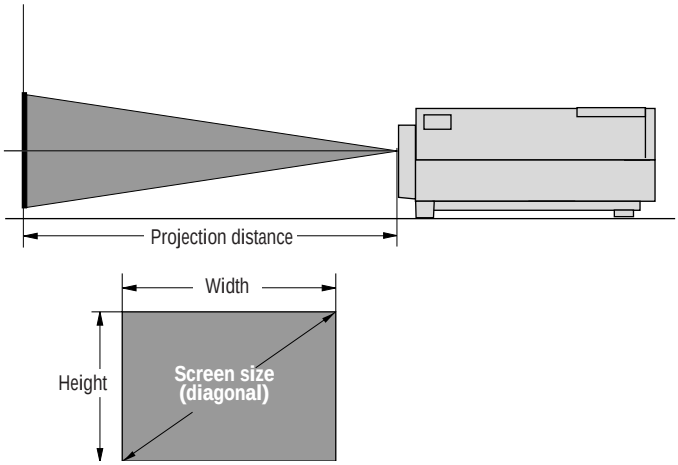

Attaching the lens cap to the lens hood with the supplied string and rivet. (GT2000 only)

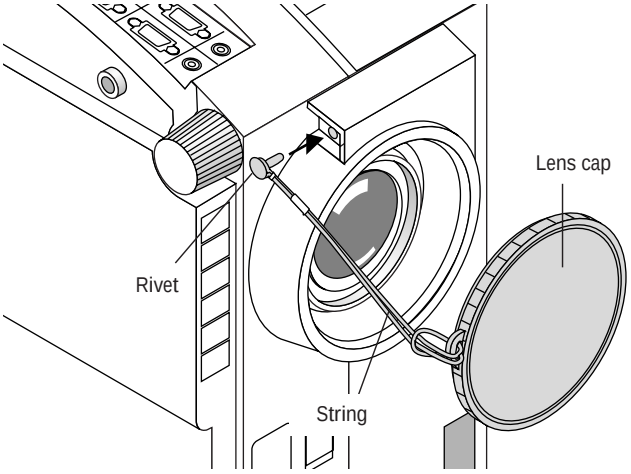

Using A Tabletop Or Cart

1. Place your LCD projector on a flat level surface at the optimal distance from the screen or wall so you realize the size image you want. (Avoid having bright room lighting or sun light directly on the screen or wall where you'll be projecting the image.)
2. Connect the power cable, remove the lens cap and turn the projector on. (If no input signal is available, the projector will display a background image.)
3. Ensure that the projector is centered to the screen.
4. Move the projector left or right to center the image horizontally on the screen. (A)
5. To center the image vertically (B), lift the front edge of the projector and press the buttons on the front of the projector, just above the feet, to release the one-touch tilt feet. (There is approximately 10.5˚ of up and down adjustment for the front of the projector.)
6. If a trapezoidal distortion appears on the screen, use the Focus and CTL buttons on the remote control or select the Keystone from the Settings Menu under the Main menu.

   Note: *The keystone function is not available if no input signal is present.*

   If necessary, adjust the front or rear feet so that the lens surface is parallel to the screen. If you use the projector with the screen tilted, the picture will be distorted. Each of the rear feet height can be changed up to 5mm (0.2”).
7. Increase or reduce the size of the projected image by pressing the "Zoom" (+) or (–) buttons on the remote control or top of the cabinet. (The zoom buttons are not available on GT2000R.)
8. Adjust the focus by pressing the "Focus" (+) or (-) buttons on the remote control or top of the cabinet.

   (The focus buttons are not available on GT2000R. Use the Focus/Floating lock knob and Focus/Floating ring to adjust the focus on GT2000R. See below.)

(A) Top view

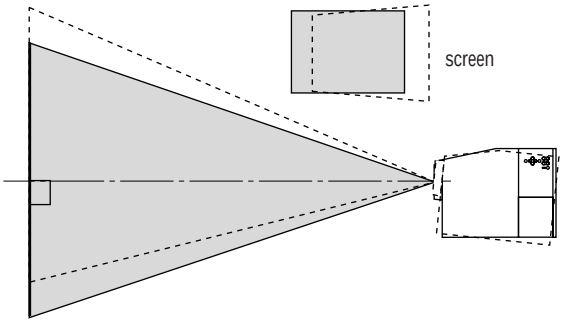

(B) Side view

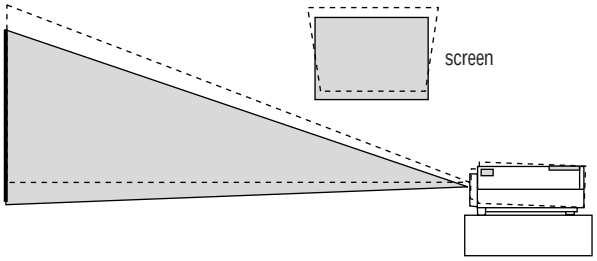

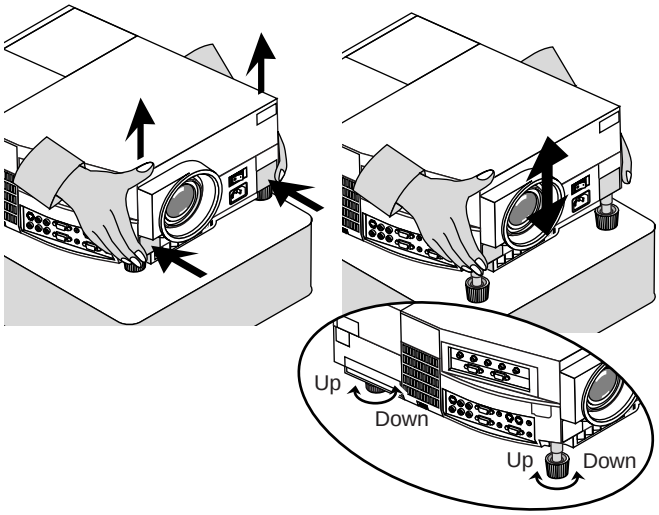

To adjust the focus on GT2000R

1. Make sure that the focus lock knob and the floating lock knob are tightened.
2. Adjust the focus at the center of the screen.
   1) Loosen the focus lock knob, then grasp the focus ring and rotate it.
   2) Rotate the focus ring until the best center focus is obtained, and tighten the focus lock knob to lock it.
3. Adjust the focus at the edges of the screen.
   1) Loosen the floating lock knob, then grasp the floating ring and rotate it.
   2) Rotate the floating ring until the best edge focus is obtained, and tighten the floating lock knob to lock it.
4. Select the "Projection" and choose "Rear-front" or "Rear ceiling" to project an image from the rear.

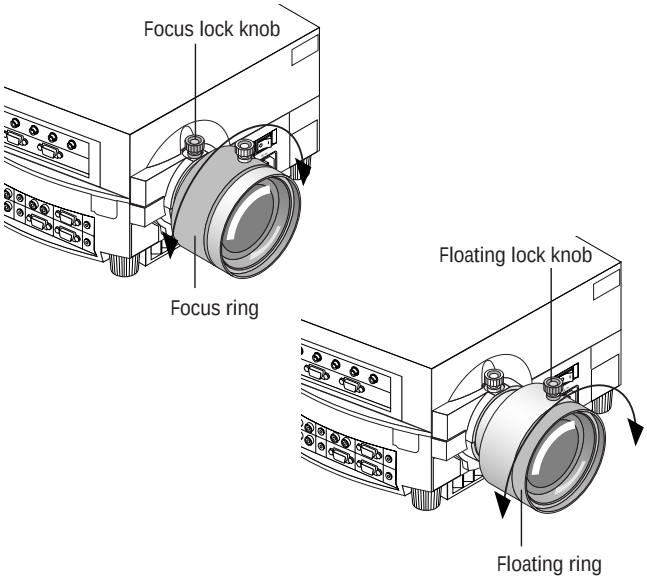

Distance Chart (GT2000)

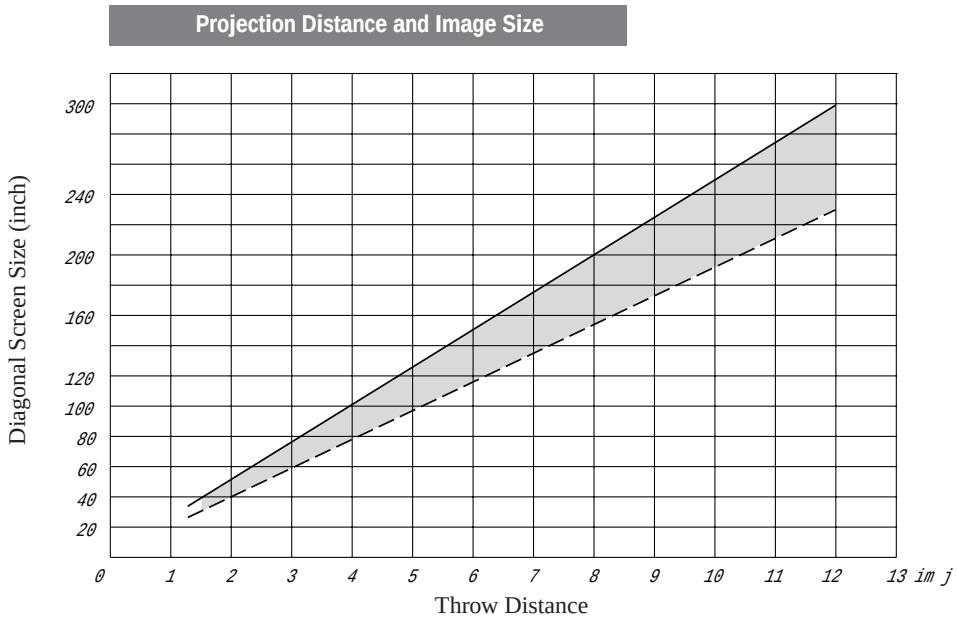

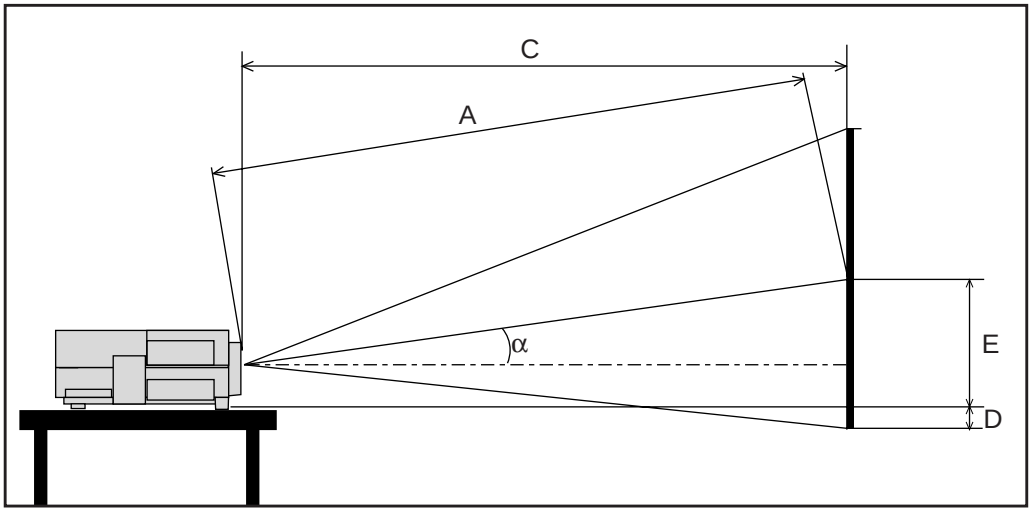

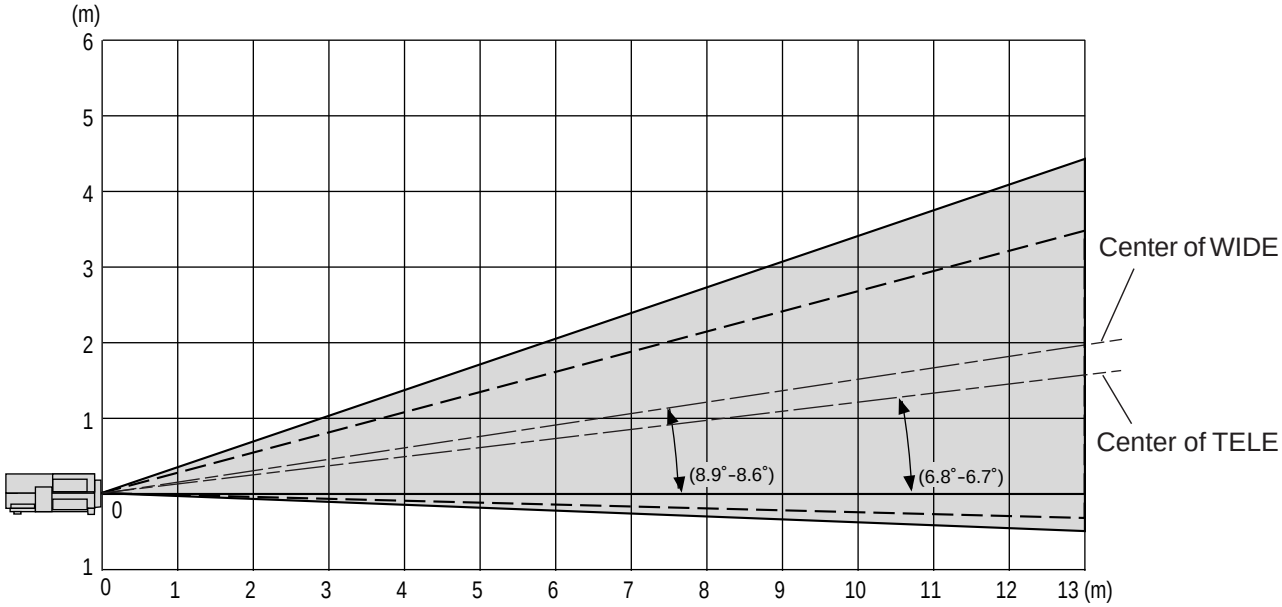

Standard Zoom Lens (Wide)

α	Degree	9.0	8.9	8.8	8.8	8.8	8.7	8.7	8.7	8.7	8.6	8.6	8.6	8.6
β (sin= α)		0.16	0.15	0.15	0.15	0.15	0.15	0.15	0.15	0.15	0.15	0.15	0.15	0.15
γ (cos= α)		0.99	0.99	0.99	0.99	0.99	0.99	0.99	0.99	0.99	0.99	0.99	0.99	0.99
Screen Size	inch	32	48	56	64	72	80	96	120	144	160	192	216	240
H–Width	mm	812.8	1219.2	1422.4	1625.6	1828.8	2032	2438.4	3048	3657.6	4064	4876.8	5486.4	6096
4 : 3 Diagonal	inch	40	60	70	80	90	100	120	150	180	200	240	270	300
	mm	1016	1524	1778	2032	2286	2540	3048	3810	4572	5080	6096	6858	7620
A	mm	1557	2377	2787	3197	3608	4018	4838	6069	7300	8120	9761	10992	12223
	inch	61.3	93.6	109.7	125.9	142.0	158.2	190.5	238.9	287.4	319.7	384.3	432.76	481.2
C	mm	1537	2349	2754	3160	3566	3971	4783	6000	7217	8028	9651	10868	12085
	inch	60.5	92.5	108.4	124.4	140.4	156.4	188.3	236.2	284.1	316.1	380.0	427.9	475.8
D	mm	-32	-1	14	29	44	60	90	135	181	211	272	317	363
	inch	-1.2	-0.0	0.6	1.1	1.7	2.3	3.5	5.3	7.1	8.3	10.7	12.5	14.3
E	mm	336	458	519	580	641	702	825	1008	1191	1313	1557	1740	1923
	inch	13.2	18.0	20.4	22.9	25.3	27.7	32.5	39.7	46.9	51.7	61.3	68.5	75.7

Formulas (mm)

H **mm**=Horizontal Screen Width

$C = [(53.2 \times H) / 26.6] - 85.4$

$\alpha = \mathrm{Tan}^{-1}(8 \times H) / (26.6 \times C)$

$A = C / \cos\alpha$

$E = 92.2 + [(8 \times H) / 26.6]$

$D = (0.375 \times H) - E$

Formulas (inch)

H **inch**=Horizontal Screen Width

$C = [(50.7 \times H) - 85.4] / 25.4$

$\alpha = \mathrm{Tan}^{-1}(8 \times H) / (26.6 \times C)$

$A = C / \cos\alpha$

$E = [92.2 + (7.6 \times H)] / 25.4$

$D = (0.375 \times H) - E$

A : Distance between the lens and the screen center
C : Horizontal throw distance between the screen surface and the lens
D : Vertical distance between the projector foot and the base of image
E : Vertical distance between the projector foot and the screen center

Standard Zoom Lens (Tele)

α	Degree	7.0	6.8	6.8	6.8	6.8	6.7	6.7	6.7	6.7	6.7	6.7	6.7	6.6
β (sin= α)		0.12	0.12	0.12	0.12	0.12	0.12	0.12	0.12	0.12	0.12	0.12	0.12	0.12
γ (cos= α)		0.99	0.99	0.99	0.99	0.99	0.99	0.99	0.99	0.99	0.99	0.99	0.99	0.99
Screen Size	inch	32	48	56	64	72	80	96	120	144	160	192	216	240
H–Width	mm	812.8	1219.2	1422.4	1625.6	1828.8	2032	2438.4	3048	3657.6	4064	4876.8	5486.4	6096
4 : 3 Diagonal	inch	40	60	70	80	90	100	120	150	180	200	240	270	300
	mm	1016	1524	1778	2032	2286	2540	3048	3810	4572	5080	6096	6858	7620
A	mm	2013	3075	3606	4137	4668	5199	6260	7853	9446	10508	12631	14224	15817
	inch	79.3	121.1	142.0	162.9	183.8	204.7	246.5	309.2	371.9	413.7	497.3	560.0	622.7
C	mm	1999	3053	3581	4108	4635	5163	6217	7800	9382	10436	12546	14128	15710
	inch	78.7	120.2	141.0	161.7	182.5	203.3	244.8	307.1	369.4	410.9	493.9	556.2	618.5
D	mm	-32	-1	14	29	44	60	90	135	181	211	272	317	363
	inch	-1.2	0.0	0.6	1.1	1.7	2.3	3.5	5.3	7.1	8.3	10.7	12.5	14.3
E	mm	336	458	519	580	641	702	825	1008	1191	1313	1557	1740	1923
	inch	13.2	18.0	20.4	22.9	25.3	27.7	32.5	39.7	46.9	51.7	61.3	68.5	75.7

Formulas (mm)

H **mm**=Horizontal Screen Width

$C = \{[(53.2 \times H) / 26.6] - 85.4\} \times 1.3$

$\alpha = \mathrm{Tan}^{-1}(8 \times H) / (26.6 \times C)$

$A = C / \cos\alpha$

$E = 92.2 + [(8 \times H) / 26.6]$

$D = (0.375 \times H) - E$

Formulas (inch)

H **inch**=Horizontal Screen Width

$C = \{[(50.7 \times H) - 85.4] \times 1.3\} / 25.4$

$\alpha = \mathrm{Tan}^{-1}(8 \times H) / (26.6 \times C)$

$A = C / \cos\alpha$

$E = [92.2 + (7.6 \times H)] / 25.4$

$D = (0.375 \times H) - E$

A : Distance between the lens and the screen center
C : Horizontal throw distance between the screen surface and the lens
D : Vertical distance between the projector foot and the base of image
E : Vertical distance between the projector foot and the screen center

⚠ WARNING

- Only use your LCD projector on a solid, level surface. If the projector falls to the ground, you can be injured and the projector severely damaged.
- Do not use the LCD projector where temperatures vary greatly. The projector must be used at temperatures between 0˚C and 40˚C.
- Do not expose the LCD projector to moisture, dust, or smoke. This will degrade image performance.
- Ensure that you have adequate ventilation around your LCD projector so that heat can dissipate. Do not cover the vents on the side or the front of the projector.

Ceiling Installation

Installing your LCD Projector on the ceiling must be done by a qualified technician. Contact your NEC dealer for more information. Do not attempt to install the projector yourself.

***NOTE** : Distances may vary ±5%.*

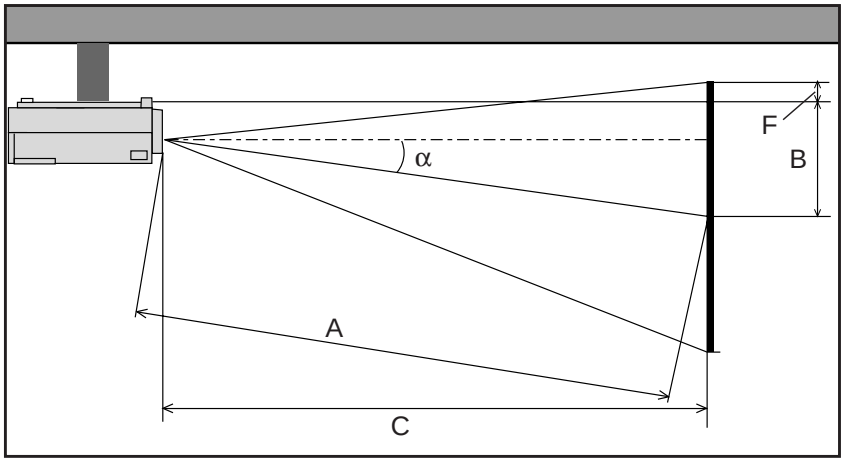

A : Distance between the lens and the screen center
B : Vertical distance between the projector bottom and the screen center
C : Horizontal throw distance between the screen surface and the lens
F : Vertical distance between the projector bottom and the top of image

Standard Zoom Lens (Wide)

α	Degree	9.0	8.9	8.8	8.8	8.8	8.7	8.7	8.7	8.7	8.6	8.6	8.6	8.6
β (sin= α)		0.16	0.15	0.15	0.15	0.15	0.15	0.15	0.15	0.15	0.15	0.15	0.15	0.15
γ (cos= α)		0.99	0.99	0.99	0.99	0.99	0.99	0.99	0.99	0.99	0.99	0.99	0.99	0.99
Screen Size	inch	32	48	56	64	72	80	96	120	144	160	192	216	240
H–Width	mm	812.8	1219.2	1422.4	1625.6	1828.8	2032	2438.4	3048	3657.6	4064	4876.8	5486.4	6096
4 : 3 Diagonal	inch	40	60	70	80	90	100	120	150	180	200	240	270	300
	mm	1016	1524	1778	2032	2286	2540	3048	3810	4572	5080	6096	6858	7620
A	mm	1557	2377	2787	3197	3608	4018	4838	6069	7300	8120	9761	10992	12223
	inch	61.3	93.6	109.7	125.9	142.0	158.2	190.5	238.9	287.4	319.7	384.3	432.76	481.2
B	mm	329	451	512	573	634	695	818	1001	1184	1306	1550	1733	1916
	inch	13.0	17.8	20.2	22.6	25.0	27.4	32.2	39.4	46.6	51.4	61.0	68.2	75.4
C	mm	1537	2349	2754	3160	3566	3971	4783	6000	7217	8028	9651	10868	12085
	inch	60.5	92.5	108.4	124.4	140.4	156.4	188.3	236.2	284.1	316.1	380.0	427.9	475.8
F	mm	-25	6	21	36	51	67	97	142	188	218	279	324	370
	inch	-1.0	0.2	0.8	1.4	2.0	2.6	3.8	5.6	7.4	8.6	11.0	12.8	14.6

Formulas (mm)

H **mm**=Horizontal Screen Width

$C = [(53.2 \times H) / 26.6] - 85.4$

$\alpha = \mathrm{Tan}^{-1}(8 \times H) / (26.6 \times C)$

$A = C / \cos\alpha$

$B = 85.2 + [(8 \times H) / 26.6]$

$F = (0.375 \times H) - B$

Formulas (inch)

H **inch**=Horizontal Screen Width

$C = [(50.7 \times H) - 85.4] / 25.4$

$\alpha = \mathrm{Tan}^{-1}(8 \times H) / (26.6 \times C)$

$A = C / \cos\alpha$

$B = [85.2 + (7.6 \times H)] / 25.4$

$F = (0.375 \times H) - B$

A : Distance between the lens and the screen center
B : Vertical distance between the projector bottom and the screen center
C : Horizontal throw distance between the screen surface and the lens
F : Vertical distance between the projector bottom and the top of image

Standard Zoom Lens (Tele)

α	Degree	7.0	6.8	6.8	6.8	6.8	6.7	6.7	6.7	6.7	6.7	6.7	6.7	6.6
β (sin= α)		0.12	0.12	0.12	0.12	0.12	0.12	0.12	0.12	0.12	0.12	0.12	0.12	0.12
γ (cos= α)		0.99	0.99	0.99	0.99	0.99	0.99	0.99	0.99	0.99	0.99	0.99	0.99	0.99
Screen Size	inch	32	48	56	64	72	80	96	120	144	160	192	216	240
H–Width	mm	812.8	1219.2	1422.4	1625.6	1828.8	2032	2438.4	3048	3657.6	4064	4876.8	5486.4	6096
4 : 3 Diagonal	inch	40	60	70	80	90	100	120	150	180	200	240	270	300
	mm	1016	1524	1778	2032	2286	2540	3048	3810	4572	5080	6096	6858	7620
A	mm	2013	3075	3606	4137	4668	5199	6260	7853	9446	10508	12631	14224	15817
	inch	79.3	121.1	142.0	162.9	183.8	204.7	246.5	309.2	371.9	413.7	497.3	560.0	622.7
B	mm	329	451	512	573	634	695	818	1001	1184	1306	1550	1733	1916
	inch	13.0	17.8	20.2	22.6	25.0	27.4	32.2	39.4	46.6	51.4	61.0	68.2	75.4
C	mm	1999	3053	3581	4108	4635	5163	6217	7800	9382	10436	12546	14128	15710
	inch	78.7	120.2	141.0	161.7	182.5	203.3	244.8	307.1	369.4	410.9	493.9	556.2	618.5
F	mm	-25	6	21	36	51	67	97	142	188	218	279	324	370
	inch	-1.0	0.2	0.8	1.4	2.0	2.6	3.8	5.6	7.4	8.6	11.0	12.8	14.6

Formulas (mm)

H **mm**=Horizontal Screen Width

$C = [(53.2 \times H / 26.6) - 85.4] \times 1.3$

$\alpha = \mathrm{Tan}^{-1}(8 \times H) / (26.6 \times C)$

$A = C / \cos\alpha$

$B = 85.2 + [(8 \times H) / 26.6]$

$F = (0.375 \times H) - B$

Formulas (inch)

H **inch**=Horizontal Screen Width

$C = \{[(50.7 \times H) - 85.4] \times 1.3\} / 25.4$

$\alpha = \mathrm{Tan}^{-1}(8 \times H) / (26.6 \times C)$

$A = C / \cos\alpha$

$B = [85.2 + (7.6 \times H)] / 25.4$

$F = (0.375 \times H) - B$

A : Distance between the lens and the screen center
B : Vertical distance between the projector bottom and the screen center
C : Horizontal throw distance between the screen surface and the lens
F : Vertical distance between the projector bottom and the top of image

GT2000R

If your projector is mounted on the ceiling and your image is upside down, use the “Menu” and “Select” buttons on your projector cabinet or (▲) (▼) buttons on your remote control to correct the orientation. (See page E-39.)

Reflecting The Image

Using a mirror to reflect your LCD projector's image enables you to enjoy a much larger image. Contact your NEC dealer if you need a mirror.

If you're using a mirror and your image is inverted, use the “Menu” and “Select” buttons on your projector cabinet or (▲) (▼) buttons on your remote control to correct the orientation. (See page E-39.)

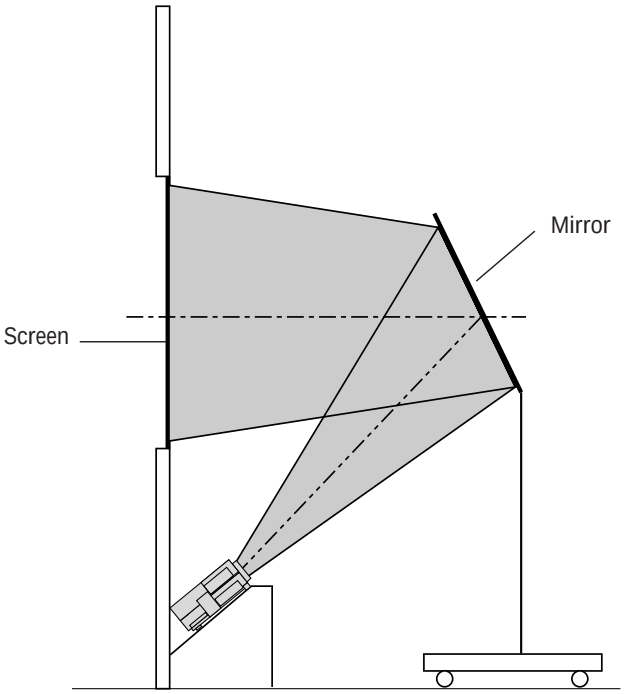

Rear Screen Projection

You can use your MultiSync GT2000R LCD projector to project an image from the rear onto a transparent screen. The distance the projector must be from the screen is the same as if you were projecting the image from the front. Contact your NEC dealer if you need a transparent screen.

If you're projecting the image from the rear and your image is inverted, use the “Menu" and "Select" buttons on your projector cabinet or (▲) (▼) buttons on your remote control to correct the image. (See page E-39.)

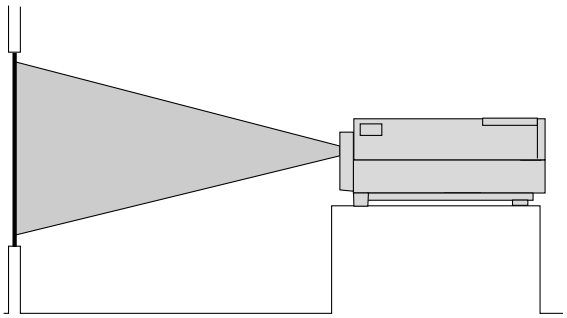

GT2000R

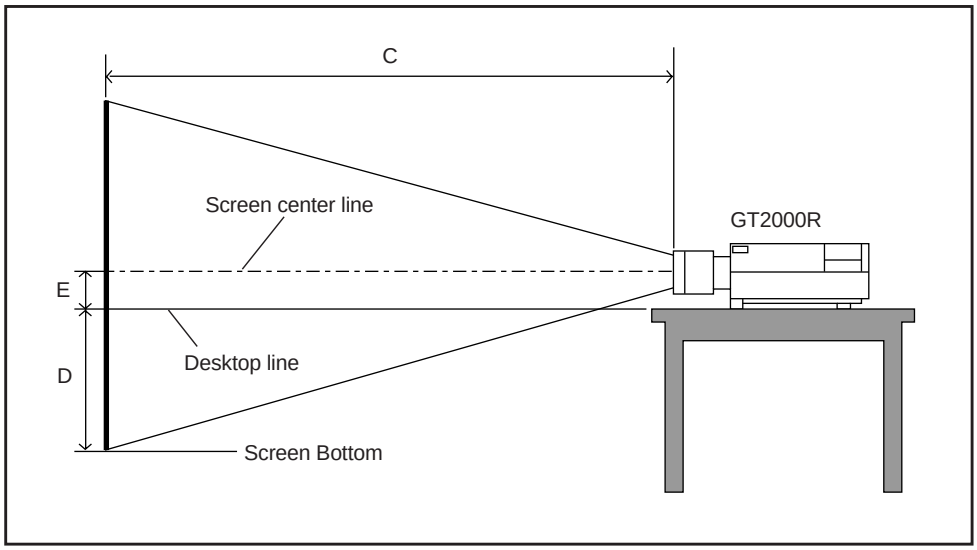

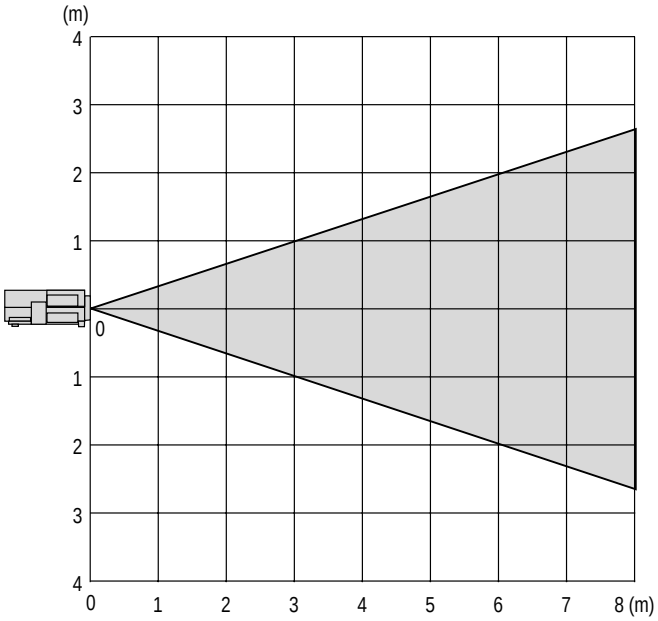

Degree											
α		0.0									
β (sin= α)		0.0									
γ (cos= α)		1.0									
Screen Size H–Width	inch	32	48	56	64	72	80	96	120	144	160
	mm	812.8	1219.2	1422.4	1625.6	1828.8	2032	2438.4	3048	3657.6	4064
4 : 3 Diagonal	inch	40	60	70	80	90	100	120	150	180	200
	mm	1016	1524	1778	2032	2286	2540	3048	3810	4572	5080
A (=C)	mm	833	1303	1539	1774	2009	2244	2714	3419	4124	4594
	inch	32.8	51.3	60.6	69.8	79.1	88.3	106.8	134.6	162.4	180.9
D	mm	221	373	449	525	602	678	830	1059	1287	1440
	inch	8.7	14.7	17.7	20.7	23.7	26.7	32.7	41.7	50.7	56.7
E	mm	84	84	84	84	84	84	84	84	84	84
	inch	3.3	3.3	3.3	3.3	3.3	3.3	3.3	3.3	3.3	3.3

Formulas (mm)

H mm=Horizontal Screen Width

$C = \{[(H/26.6) - 30.77] \times 30.8\} + 841.3$

$D = (0.375 \times H) - 84.2$

$E = 84.2$

Formulas (inch)

H inch=Horizontal Screen Width

$C = \{[(0.95 \times H) - 30.8] \times 1.21\} + 33.1$

$D = (0.375 \times H) - 3.3$

$E = 3.3$

C : Horizontal throw distance between the screen surface and the lens

D : Vertical distance between the projector foot and the base of image

E : Vertical distance between the projector foot and the screen center

Wiring Diagram

Connecting Your PC Or Macintosh Computer

Connecting your PC or Macintosh computer to your GT2000/ GT2000R Projector will enable you to project your computer's screen image for an impressive presentation.

To connect to a PC or Macintosh, simply:

1. Turn off the power to your projector and computer.
2. Use the signal cable that's supplied to connect your PC or Macintosh computer to the projector.
3. Turn on the projector and the computer.
4. If the projector goes blank after a period of inactivity, it may be caused by a screen saver installed on the computer you've connected to the projector.

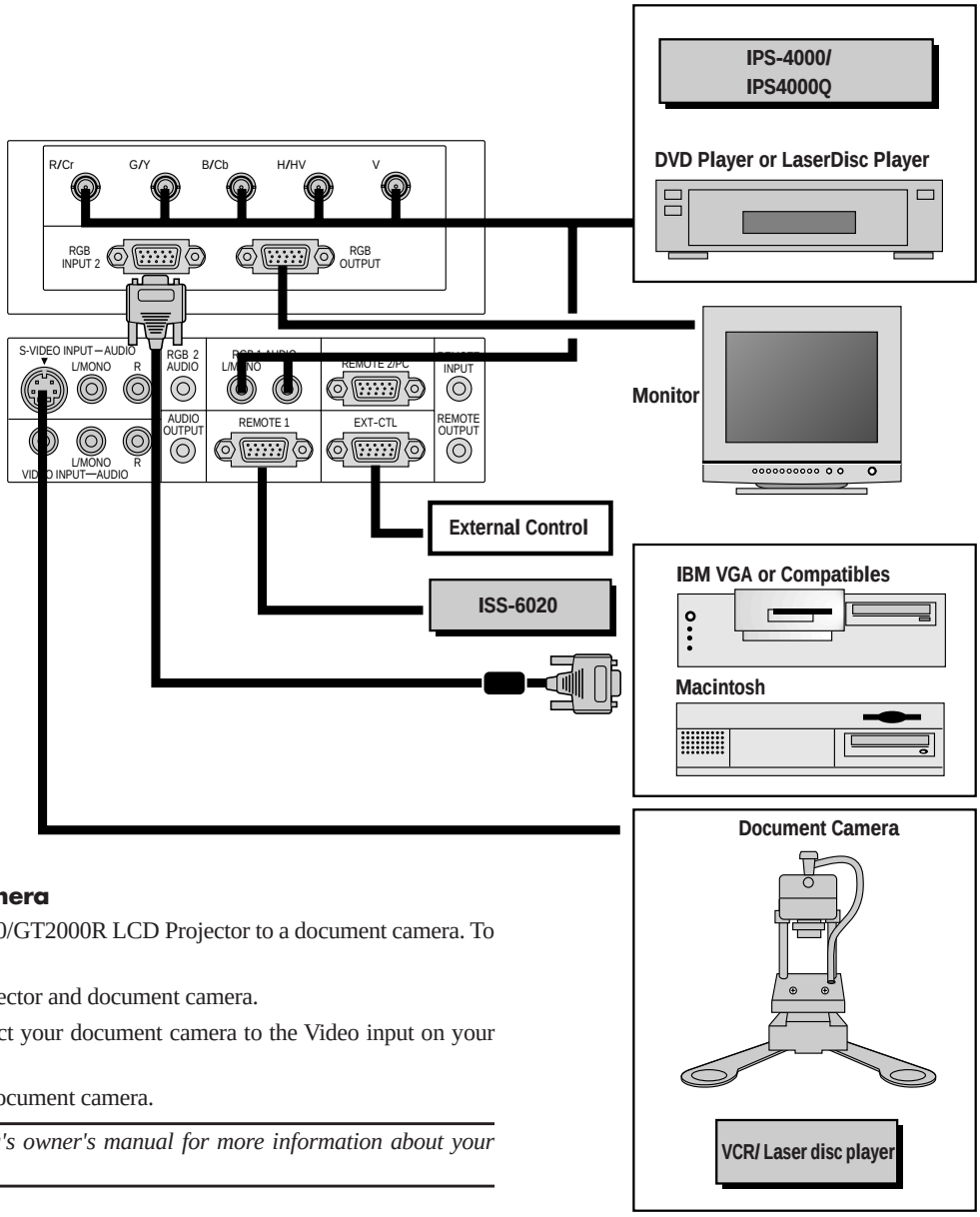

Connecting Your Document Camera

You can connect your MultiSync GT2000/GT2000R LCD Projector to a document camera. To do so, simply:

1. Turn off the power to your LCD projector and document camera.
2. Use a standard video cable to connect your document camera to the Video input on your projector.
3. Turn on the LCD projector and the document camera.

NOTE: *Refer to your document camera's owner's manual for more information about your camera's video output requirements .*

Connecting Your VCR Or Laser Disc Player

Use common RCA cables (not provided) to connect your VCR or laser disc player to your MultiSync GT2000/GT2000R LCD Projector. To make these connections, simply:

1. Turn off the power to your LCD projector and VCR or laser disc player.
2. Connect one end of your RCA cable to the video output connector on the back of your VCR or laser disc player, connect the other end to the Video input on your projector. Use standard RCA audio patch cords to connect the audio from your VCR or laser disc player to your projector (if your VCR or laser disc player has this capability). Be careful to keep your right and left channel connections correct for stereo sound.
3. Turn on the LCD projector and the VCR or laser disc player.

NOTE: *Refer to your VCR or laser disc player owner's manual for more information about your equipment's video output requirements.*

Connecting An External Monitor

You can connect a separate, external monitor to your LCD projector to simultaneously view on a monitor the image you're projecting. To do so:

1. Turn off the power to your LCD projector, monitor and computer, document camera or video source.
2. Use a 15-pin cable to connect your monitor to the RGB Monitor Output (Mini D-Sub 15 pin) connector on your LCD projector.
3. Turn on the LCD projector, monitor and the computer, document camera or video source.

PC Control

Interface

An RS-232C cable enables you to use your PC as a controller for your projector.

* RS-232C (Straight cable)
* Baud rate: ..... 9600 bps
* Data length: ..... 8 bits
* Parity: ..... Odd parity
* Stop bit: ..... 1 bit
* Communications procedure: ... Full duplex

REMOTE 2/PC Connector

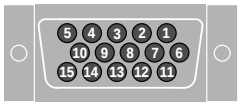

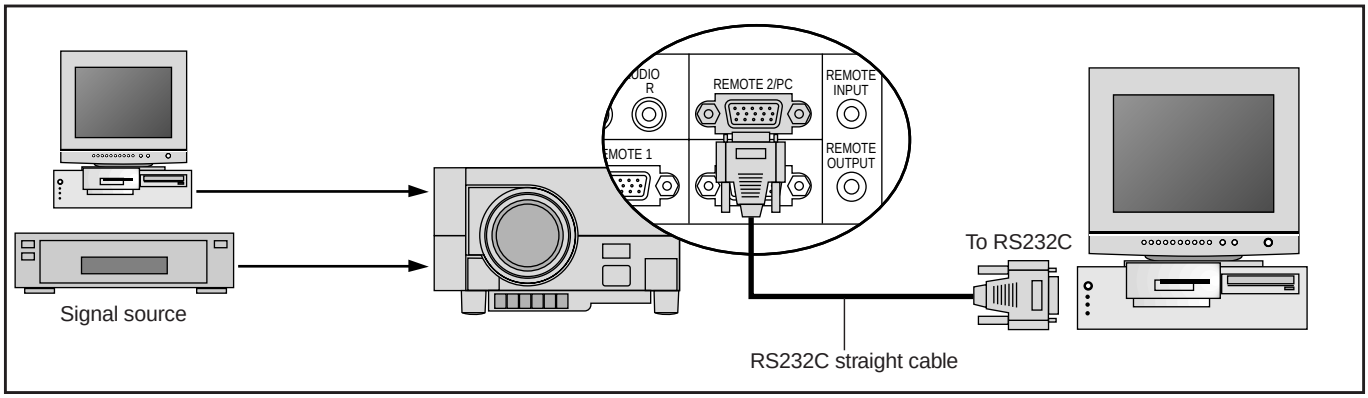

Pin No.	I/O	Signal Name	Function
9, 15	-	Signal Ground	Ground
6	I	Receive Data	Data reception
7	O	Transmit Data	Data transmission
12	I	Clear To Send	Reception interrupt
8	O	Request To Send	Transmission interrupt
1, 2	-		Used iside the projector (Should always be left open)
3-5, 10, 11, 13, 14	-	Not Connected	Not used

Control Data Format

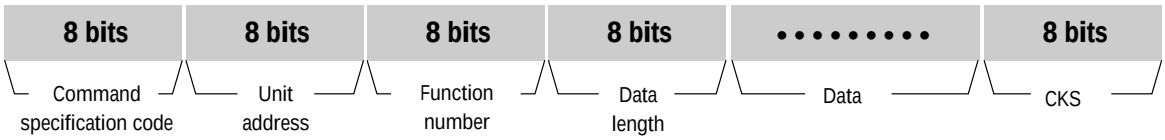

* **Command specification code:** This code specifies whether the command is a single control command or a multiple control command.
  A single control command (C0H) is valid for only the projector specified by the unit address.
  A multiple control command (C1H) is valid for all projectors which receive the command, regardless of the unit address. Note that only projectors in agreement with the unit address will return an ACK.
* **Unit address:** This code specifies the ID of the projector (0-64). You can select the [Settings Menu]->[Projector ID] under the main menu and specify the ID of projector.
  For a single projector, the ID should be set at 0.
* **Function number:** The function's identification code.
* **Data length:** This specifies the number of bytes of data (not including CKS).
* **Data:** The parameters attached to the function.
* **CKS (check sum):** The lower-order 8 bits of the calculation results from the first byte (i.e., the command specification code) to the byte in front of CKS.

Command Communications Sequence

When a command sent from the personal computer has been correctly received by the projector, an "ACK" is returned for the command. When the command has not been received correctly, a "Receive Error" is sent back. An invalid command will cause a "Command Error".

Note: *When an"ACK" from the projector is not confirmed and the next command is received by the projector, an error in communication can result.*

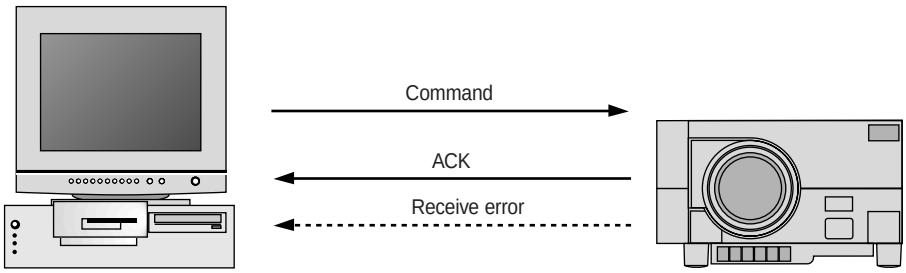

(1) Command (PC to Projector)

Command specification code Unit address Function number Data length Data ..... CKS

(2) ACK (Projector to PC)

*When there is return data

Command specification code Unit address Function number Data length Data ..... CKS

*When there is no return data

Command specification code Unit address Function number 00H CKS

(3) Receive error (Projector to PC)

Command specification code Unit address 00H 01H EC (Error code) CKS

EC (Receive Error Codes)
02H : Command error
04H : Checksum error
08H : Busy
10H : Parameter error
20H : Run error
40H : Receiving error on Projector

Note: *For a complete PC Control Command Reference, see page E-83.*

Connections with the ISS-6020

Connections with One ISS-6020 Switcher

Connecting your GT2000/GT2000R projector to a single ISS-6020 switcher (using a cable available separately) delivers a series of benefits:

- You can handle input from ten sources simultaneously.
- The ISS-6020 can be controlled by the remote provided with your GT2000/GT2000R or with the buttons on the projector cabinet. (Source selection without the use of a CTL-6010 cable must be performed with the GT2000 hand held remote control.)
- “Channel Memory” enables you to set optimal settings individually for as many as ten different sources.

When the GT2000/GT2000R is used with the ISS-6020 switcher in bundled operation, the indicator LED (STATUS) lights green after switching on the GT2000/GT2000R power.

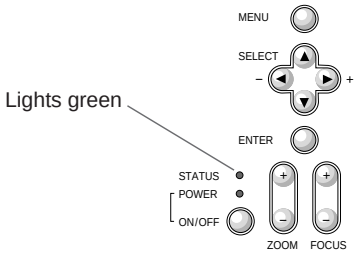

System Connections Diagram

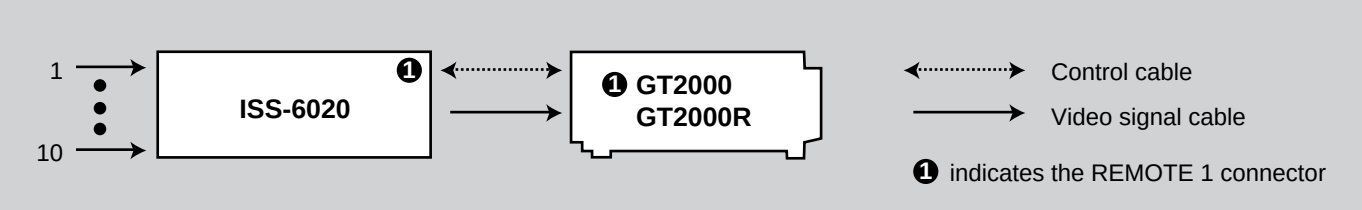

To use the ISS-6020 with the GT2000/GT2000R, do the following:

* Select the [Settings Menu]→[Switcher Control]→[SW 1 Level] under the main menu.(The factory default setting is "Standalone".)
* Select the [Memory]->[Channel Memory] under the main menu and perform the Signal Entry.
* When using the projector with the external equipment, select the [Memory]->[User Memory] under the main menu and perform the Signal Entry.
* Select the [Switcher] menu from the main menu and make some adjustments such as RGB gain, color, tint, sharpness, volume and audio control.

DIP Switch Settings

To use GT2000/GT2000R with an ISS-6020, the DIP switch (S8601) located inside the ISS-6020 System Control module should be set as shown here. (Leave the pins 5 to 7 in their original factory settings.)

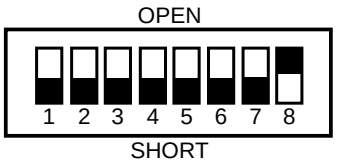

Pin No.8 must be set at "OPEN".

*** For more details about operating the ISS-6020, please see your ISS-6020 user's manual**

Connections with Multiple ISS-6020 Switcher

You can accommodate as many as 100 sources by connecting your GT2000/GT2000R to one ISS-6020 switcher that acts as "master" and ten more switchers that are "slaves."
To connect several ISS-6020s, the "Switcher Control" on the "Settings Menu" should be set to "SW 2 Level" for multiple projectors. (See page E-38.)

Note: *The more ISS-6020 switchers that are connected, the more time is needed for the projector to start up.*

System Connections Diagram

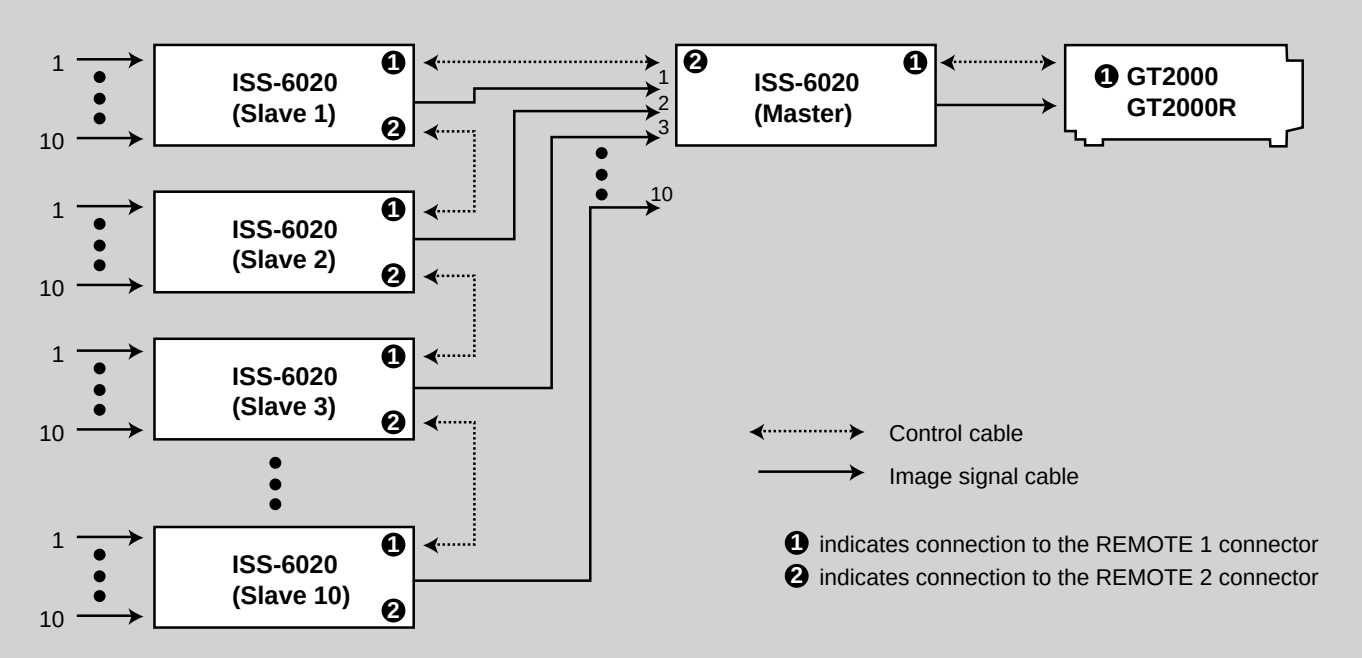

DIP Switch Settings

To use the GT2000/GT2000R with two ISS-6020 switchers or more, the DIP switch (S8601) inside the ISS-6020 System Control module should be set as shown here. The pin 8 should be set to "OPEN". (Leave the pins 5 to 7 in their original factory settings.)

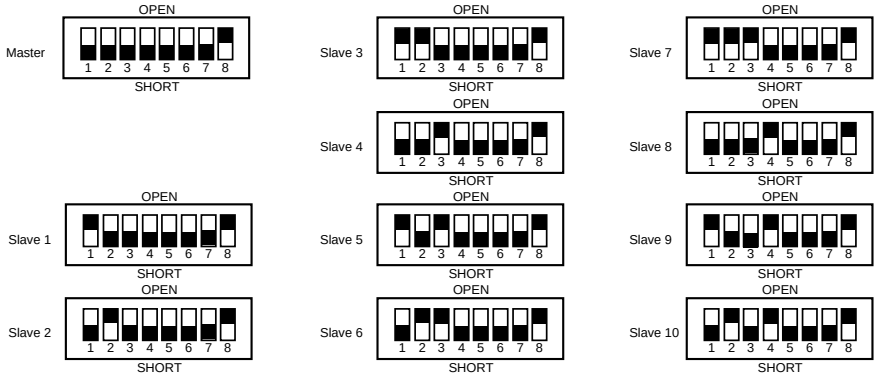

Slide Switch Settings

Set the slide switch located inside the ISS-6020 system control module to the RS-422 side.

* Select the [Settings Menu]→[Switcher Control]→[SW 2 Level] under the main menu.
* Select the [Memory]→[Channel Memory] under the main menu and perform the Signal Entry.
* When using the projector with the external equipment, select the [Memory]→[User Memory] under the main menu and perform the Signal Entry.
* Select the [Switcher] menu from the main menu and make some adjustments such as RGB gain, color, tint, sharpness, volume and audio control.

Connecting Multiple Projectors

As many as 64 projectors can be connected together and controlled by the same PC. For more information about managing multiple projectors. See page E-31.

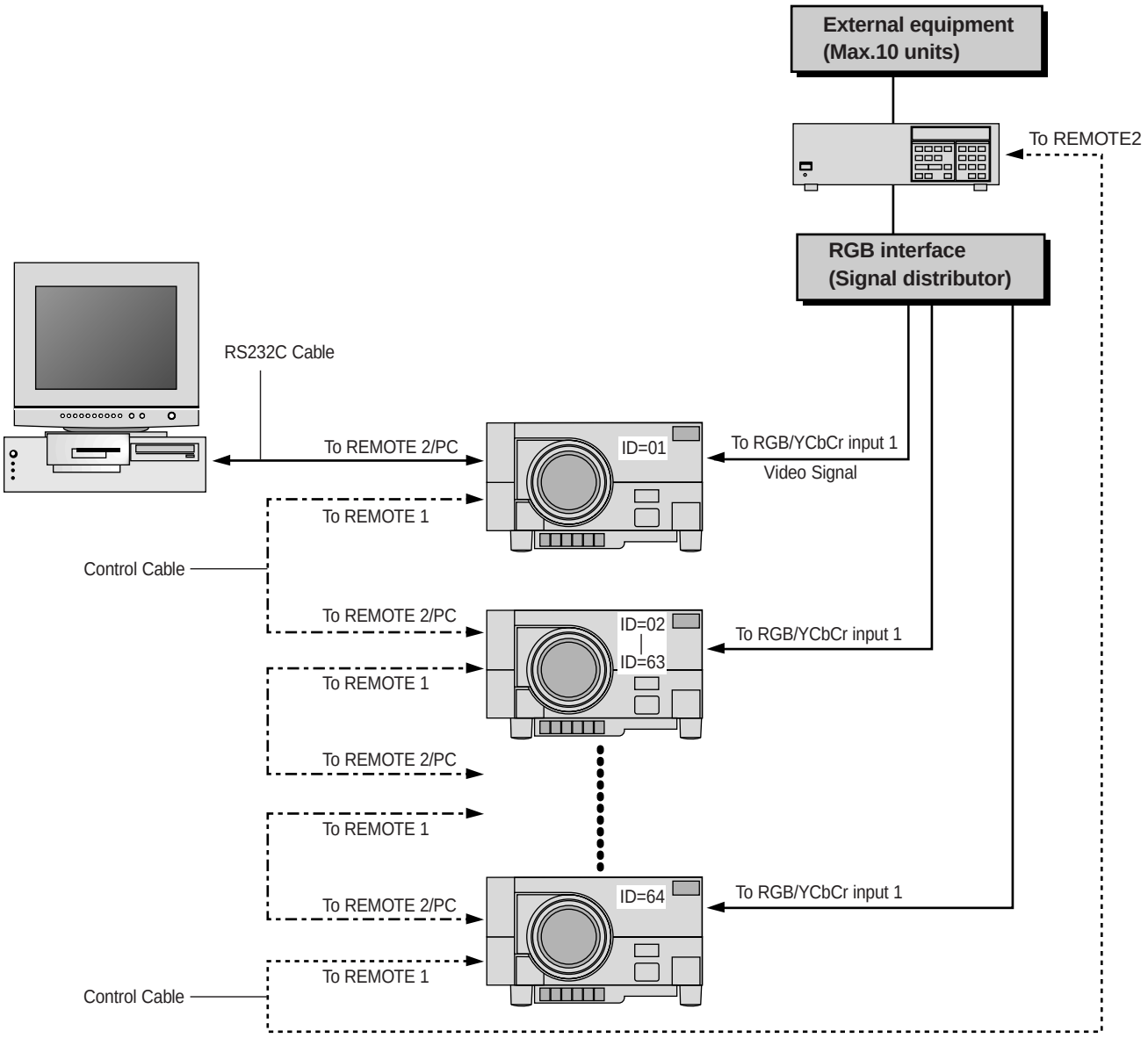

* When you connect multiple projectors, a different ID number (from 00 to 64) must be assigned to each. To specify an ID of the projector, select the [Settings Menu]→[Projector ID] under the main menu and enter the ID number.
* The sync termination must be set at "75Ω". To do this, select the [Settings Menu]→[Sync Termination] under the main menu and select "75Ω".
* The ID number "1" should be assigned to the projector which is connected with a PC and "64" to the projector which is connected with the ISS-6020 Switcher.
* When connecting the ISS-6020 Switcher with a control cable in connection of multiple projectors, connect the ISS-6020 Switcher to the last projector with an unused REMOTE 1 connector. The ID number of the last projector should be set at 64.

  Also you must set the "RS-232C/RS-422" slide switch inside the ISS-6020 system control module to "RS-422".

Operating Multiple Projector with Remote Control

You can operate as many as 64 projectors with the same remote control in wireless operation.

To do so:

1. Select [Settings Menu]→[Projector ID] under the main menu and assign an ID number to each projector.
2. Specify the remote ID number to the projector to be used. To do, press and hold the CTL and press Adr button to enter the ID number.

   You can operate the projector assigned the same ID number as the remote address.

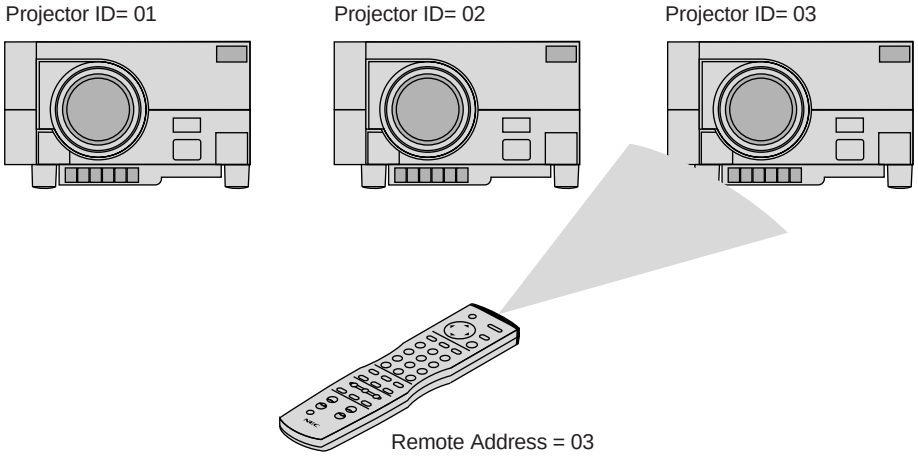

You can daisy-chain as many as 64 projectors and operate them separately with the same remote control in wired operation.

To do so:

Use the remote control cable supplied to connect the Remote Control Output of one projector to the Remote Control Input of the next until all the projectors are connected.

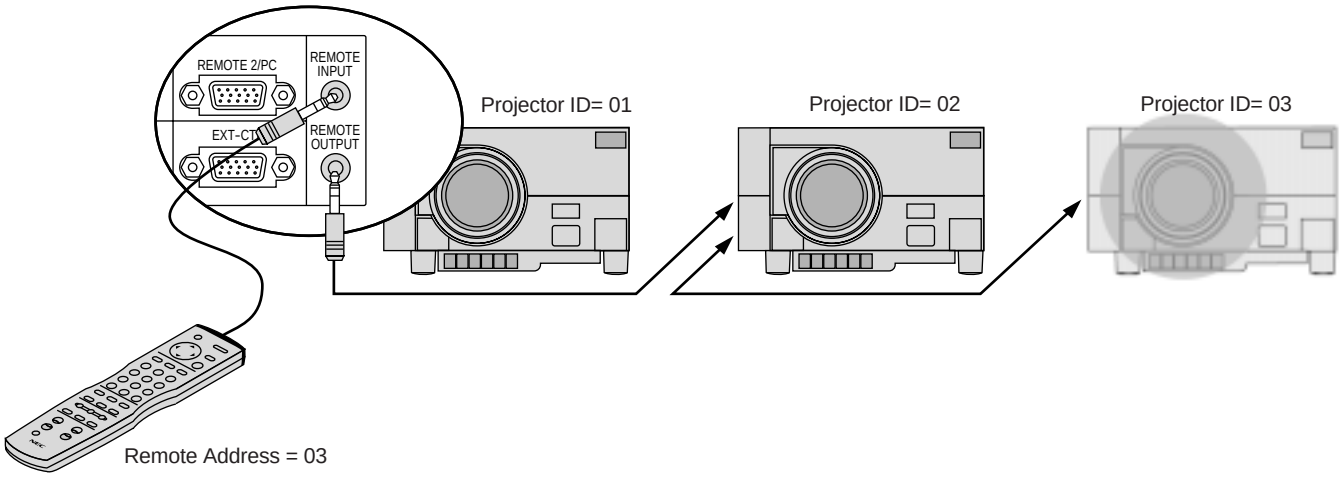

External Control

To turn your projector on and off, to turn the mute on or off and to switch video sources, use the EXT-CTL connector.

* When using the external control, do the following:

1. Select the [Settings Menu]→[Ext.Control] under the main menu and select "On".
2. Set the pin 8 of the DIP switch (S8601) to "SHORT". The DIP switch is located inside the ISS-6020 system control module.

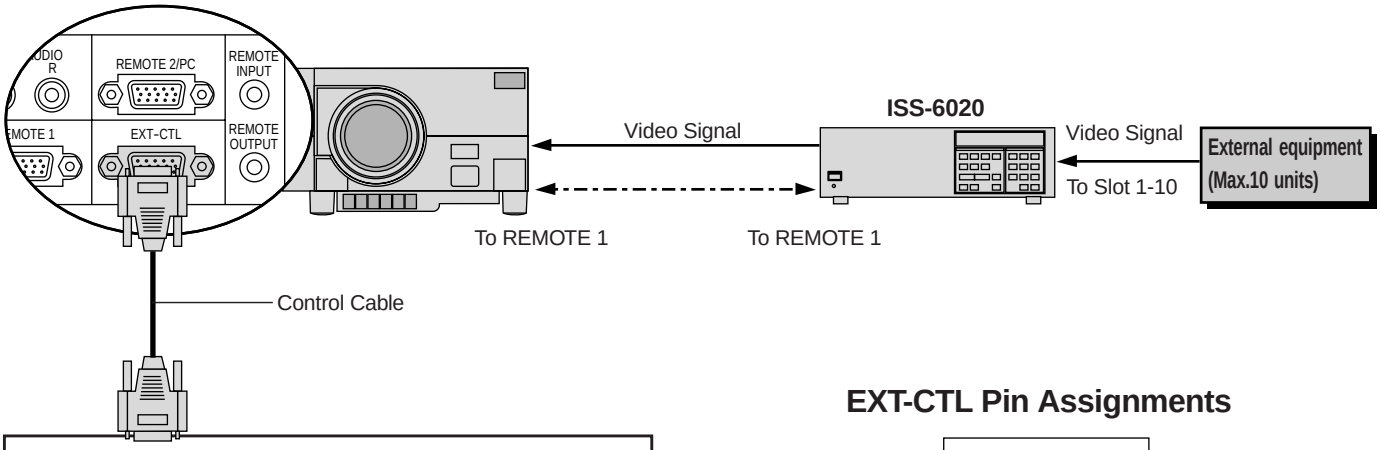

Console Control Unit Setup Example

* This example is when power is ON and channel 1, 2, and 3 switching is activated. The circuit setup is valid when the contacts of any of the switches are closed.

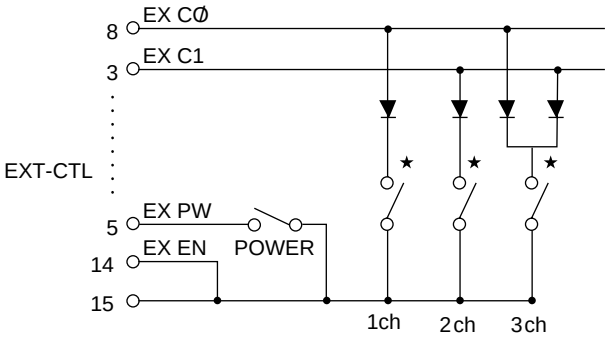

Small signal Silicone diodes are used.

* Switchs cannot be pressed simultaneously.
* Channel number means slot number on the ISS-6020.

EXT-CTL Pin Assignments

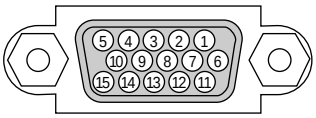

Pin No.	SignalName	Function
15	Signal Ground	Ground
14	EX EN	External control enable
5	EX PW	Power ON/OFF
10	EX MT	Mute ON/OFF
8	EX C/O	Source selection data bit
3	EX C1	Source selection data bit
9	EX C2	Source selection data bit
4	EX C3	Source selection data bit
11	EX C4	Source selection data bit
13	EX C5	Source selection data bit
12	EX C6	Source selection data bit
1,2,6,7	Not connected	Not used

Control Method

When the EX EN signal is low, the projector periodically polls the setting data.

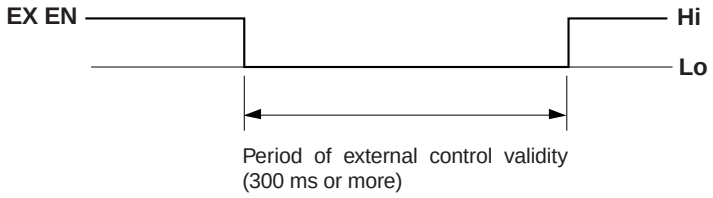

Setting The Data

When the EX PW pin is low, the power is on; when high, the power is off.

When the EX MT pin is low, Picture Mute is on; when high, Picture Mute is off.

Power	EX PW
ON	Low
OFF	High

Picture Mute	EX MT
ON	Lo
OFF	Hi

Note: *Channel settings are only valid when the ISS-6020 is connected.*

Note: *If a channel is switched to another using the remote control when the external control is valid, the channel is forced to switch to the one set by the external control.*

Connecting A Single ISS-6020 Switcher

Slot	Channel Number	EX C6	EX C5	EX C4	EX C3	EX C2	EX C1	EX C0
1	1	Hi	Hi	Hi	Hi	Hi	Hi	Lo
2	2	Hi	Hi	Hi	Hi	Hi	Lo	Hi
3	3	Hi	Hi	Hi	Hi	Hi	Lo	Lo
4	4	Hi	Hi	Hi	Hi	Lo	Hi	Hi
5	5	Hi	Hi	Hi	Hi	Lo	Hi	Lo
6	6	Hi	Hi	Hi	Hi	Lo	Lo	Hi
7	7	Hi	Hi	Hi	Hi	Lo	Lo	Lo
8	8	Hi	Hi	Hi	Lo	Hi	Hi	Hi
9	9	Hi	Hi	Hi	Lo	Hi	Hi	Lo
10	0	Hi	Hi	Hi	Hi	Hi	Hi	Hi

Connecting Multiple ISS-6020 Switchers

Master Slot	Slave Slot	Channel Number	EX C6	EX C5	EX C4	EX C3	EX C2	EX C1	EX C0
1	1	11	Hi	Hi	Hi	Lo	Hi	Lo	Lo
1	2	12	Hi	Hi	Hi	Lo	Lo	Hi	Hi
1	3	13	Hi	Hi	Hi	Lo	Lo	Hi	Lo
1	4	14	Hi	Hi	Hi	Lo	Lo	Lo	Hi
9	8	98	Lo	Lo	Hi	Hi	Hi	Lo	Hi
9	9	99	Lo	Lo	Hi	Hi	Hi	Lo	Lo
9	10	90	Lo	Hi	Lo	Lo	Hi	Lo	Hi
10	1	01	Hi	Hi	Hi	Hi	Hi	Hi	Lo
10	2	02	Hi	Hi	Hi	Hi	Hi	Lo	Hi
10	9	09	Hi	Hi	Hi	Lo	Hi	Hi	Lo
10	10	00	Hi	Hi	Hi	Hi	Hi	Hi	Hi

To calculate:

EX C6-EX C0 can be presented in binary; Lo=1 and Hi=0

Convert a decimal number (channel number) to the binary number.

Example: Channel number14 (master 1 and slave 4)=23 + 22+ 21. Set C3, C2 and C1 to "Lo".

In other words 14=26 x 0 + 25 x 0 + 24 x 0 + 23 x 1 + 22 x 1 + 21 x 1 + 20 x 0

Therefore you will get C6=Hi, C5=Hi, C4=Hi, C3=Lo, C2=Lo, C1=Lo, C0=Hi

General Controls

Getting started

This section describes the basic operation of the projector. The operation may differ depending on the makeup of the projector system; therefore, please follow the directions of your system administrator.

Operation using the remote control is described here. The following controls have the same function: the MENU button of the main unit and that of the remote control, the SELECT button of the main unit and the cursor button of the remote control, the ENTER button of the main unit and the ENTER button of the remote control.

1. Switch On the Main Power

   Press the "1" side of the POWER switch located on the front of the main unit.

   The POWER indicator will light up orange and the unit will be set to the standby mode.

   When the STATUS indicator is lit or flashing, see Page E-77.

2. Switch On the Power

   <Main unit operation>

   Press the POWER (ON/OFF) button.

   The lit POWER indicator will change to green and the power will be switched on.

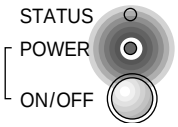

   <Remote control operation>

   Press the POWER ON button.

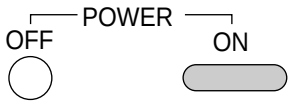

3. Select the Input

   <Select from among the input selection buttons>

   Select the desired input connector.

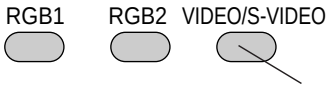

Each press toggles between S-VIDEO and VIDEO.

   <Select the input from the user memory>

   Directly specify and call the list of user memories in which the input signals and screen adjustment conditions have already been registered.

   This function is valid when the on-screen menu is not displayed.

   - Calling (Loading) Memory Lists "00 to 09"

     Hold down the CTL button and press the number keys that correspond with the numbers.

     (Remote control number buttons 0 through 9 correspond with memory lists 00 through 09.)

   - Calling (Loading) Memory Lists "00 to 99"

     Use the number buttons to enter the numbers that correspond with the memory lists, then press the LOAD button.

     When an entry mistake has been made, press the CLEAR button.

* See "Data Reading of Registration Signals (Load)" on Page E-60 when loading signal data while viewing the contents from the on-screen menu display as well as when loading the switcher signal data.

4. Adjusting the Volume of the Built-in Speaker

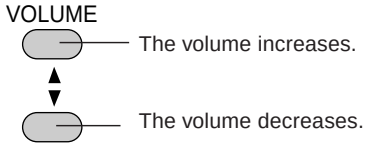

A press of the button will display the volume display for a while.

The volume adjustment range is from 0 to 63.

* To set the volume display so that it does not appear, see "Selecting the On-screen Display ON/OFF" on Page E-37.

* When the unit is connected with a switcher and [Audio Control] is set to [On], the volume button of the projector will control the volume of the equipment that is connected to AUDIO OUT of the switcher.

5. Adjust the Screen Size and then Adjust the Focus

When the projector is set up permanently, there is no need to make the usual adjustments.

(The Zoom and Focus buttons do not function on GT2000R.)

A) Press the ZOOM W/T button and adjust the screen size.

B) Press the FOCUS +/- button and adjust the focus.

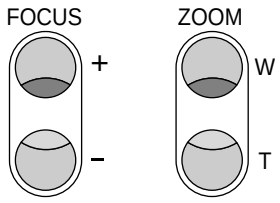

6. Adjust the Screen and Picture (Only When Required)

When the screen is not displayed properly, adjust the screen. When the tint of the picture or some other attribute is not correct, adjust the picture. See "Adjusting the Screen" on Page E-49 and "Adjusting the Picture" on Page E-44.

* When the input signal is selected with the user memory or the channel memory and the auto memory save function is set to [On], the adjustment data is overwritten.

See "Storing the Adjustment Data" on Page E-59 for information about registering the input signal and adjustment data that are currently being projected.

NOTE: *Selecting the Slot Directly When the ISS-6020 Is Connected*
When the ISS-6020 switcher is connected, the slot (channel) of the switcher can be directly specified. (Valid when the on-screen menu is not displayed)

When one switcher is connected
Enter the channel number with the number button of the remote control, then press the ENTER button.

When two or more switchers are connected
Enter the two-digit channel number with the number buttons of the remote control, then press the ENTER button.
See "Selecting the Various Items and Switchers" on Page E-58 for information about master switcher and slave switcher number specification.

7. Switch Off the Power

<Remote control operation>

A) Press the POWER OFF button.

The STATUS indicator will flash in green for 1 minute (and will be displayed while the cooling fan is turning).

The color of the POWER indicator will change to orange (indicating the standby mode).

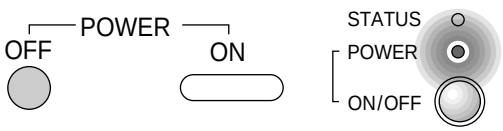

<Main unit operation>

B) Press the POWER button for at least 2 seconds. The "Power Off" message will be displayed.

* The cooling fan will continue to turn for about 1 minute after the power has been switched off. During this period, it will not be possible to switch on the power again.

8. Switch Off the Main Power

Press the "0" side of the POWER switch located on the front of the main unit.

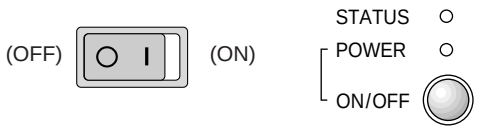

Also switch off the power to the equipment that is connected to the projector.

Note: *Do not switch off the main power before the fan has stopped. It will cause damage.*

On-screen Input Selection

Input selection is also permitted with the on-screen menu.

1. Press the MENU button to display the main menu.

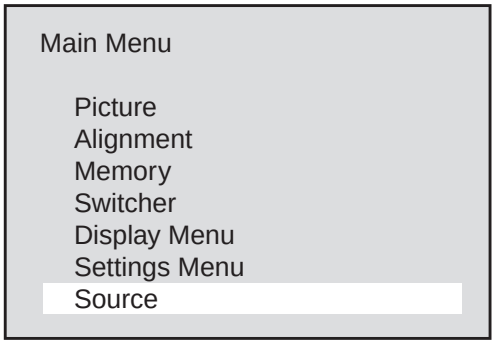

2. Select [Source] of the main menu and press the ENTER button. The source selection display will appear.

3. Press the cursor ▲/▼ button and select the target input connector (source), then press the ENTER button to set.

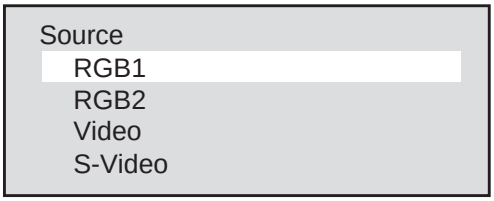

SETUP (Various Settings)

Please make settings in conjunction with both the projector and the system.

***NOTE:** To accommodate worldwide use of the projector, the default language setting for the projector is English. See below for the detailed setting procedure. Descriptions given here assume that the language setting of the unit has already been set to English.*

Default Settings of the Settings Menu

The unit is set as described below before it is shipped from the factory.

Please set any required items.

Press the MENU button to display [Main Menu], then select [Settings Menu] with the cursor button and press the ENTER button to display the various settings.

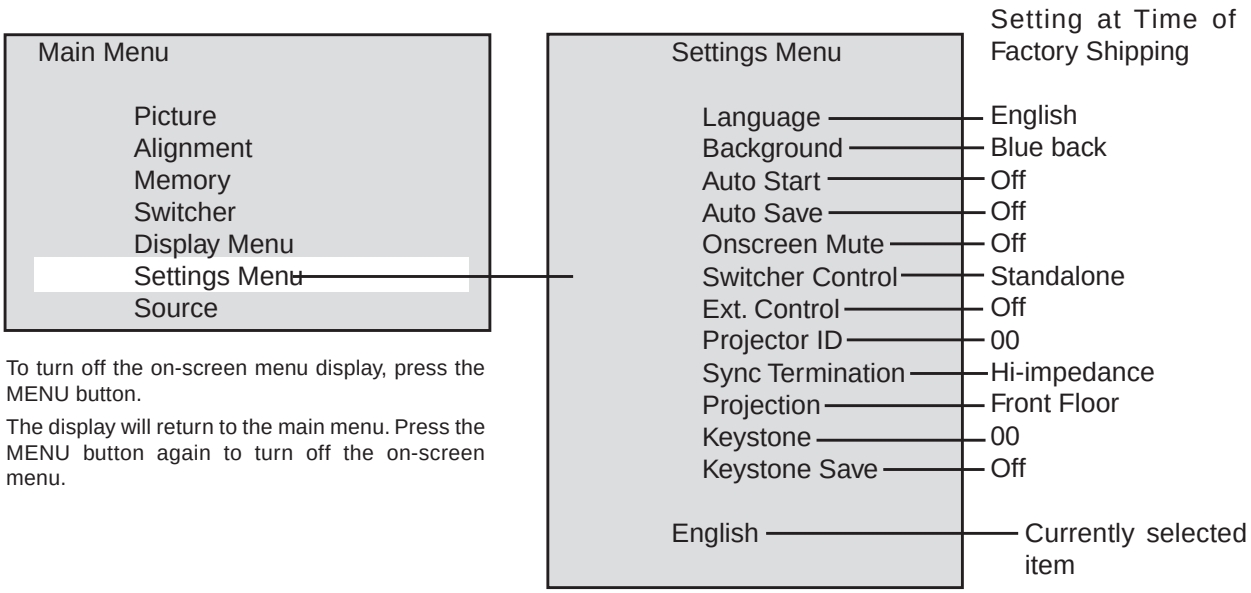

Selecting the On-screen Language [Language]

This is the language selection for the display characters of the on-screen menu and other displays.

1. Select [Settings Menu] → [Language] from the main menu.
2. Press the cursor ▲/▼ button and select the language, then press the ENTER button to set.

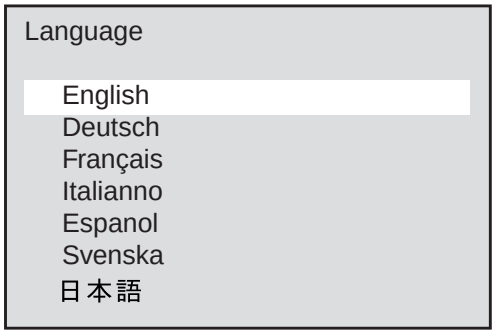

Selecting the Background Color When There Is No Signal [Background]

This is the setting of the background color when there is no input signal.

1. Select [Settings Menu] → [Background] from the main menu.
2. Press the cursor ▲/▼ button and select the background color, then press the ENTER button to set.

   Blue...The background color will be blue.

   Black...The background color will be black.

Background

Blue
Black

Selecting Auto Start [Auto Start]

When the main power switch is set to ON, this function switches on the power without the need to press the power button.

1. Select [Settings Menu] → [Auto Start] from the main menu.
2. Press the cursor ▲/▼ button and select On/Off, then press the ENTER button to set.

   On .... The projector will start up when the main power is switched on.

   Off .... The projector will enter the standby mode when the main power is switched on.

Auto Start

On
Off

Selecting the Automatic Memory Save Function [Auto Save]

This function automatically saves the adjustment conditions to the memory in use when screen adjustments or picture adjustments are performed while projecting the image of the input equipment using user memory or channel memory.

The auto save function saves the information when the MENU and ENTER buttons are used upon exiting from the various adjustment menus.

1. Select [Settings Menu] → [Auto Save] from the main menu.
2. Press the cursor ▲/▼ button and select On/Off, then press the ENTER button to set.

   On .... Auto memory saves are enabled.

   Off .... Auto memory saves are disabled.

Auto Save

On
Off

Selecting the On-screen Display ON/OFF [On-screen Mute]

This is a selection of whether or not to show displays other than on-screen menu displays (such as simple condition displays, the adjustment bar which is displayed when the remote control VOLUME button is used to make an adjustment, and when switching the input signal).

1. Select [Settings Menu] → [On-screen Mute] from the main menu.
2. Press the cursor ▲/▼ button and select On/Off, then press the ENTER button to set.

   On .... Displays will be muted.

   Off .... Displays will not be muted.

Onscreen Mute

On
Off

Selecting the Switcher Control Method [Switcher Control]

The switcher is a unit that switches the input equipment when a number of different video devices or computers are connected.

When the REMOTE 1 connector is used, input selection and adjustment are permitted by the projector. See "Using User Memory and Channel Memory" on Page E-56.

See "(Connections with the ISS-6020)" on Page E-28 for information about connections.

1. Select [Settings Menu] → [Switcher Control] from the main menu.
2. Press the cursor ▲/▼ button and select the switcher connection condition, then press the ENTER button to set.

   Settings will become effective the next time the power is switched on.

   Standalone ..... The projector used in stand alone operation.

   SW 1 Level ..... The projector used with one Switcher.

   SW 2 Level ..... The projector used with two or more Switchers.

Switcher Control

Standalone
SW 1 Level
SW 2 Level

The term switcher refers to the NEC ISS-6020 Switcher.

Selecting External Control Connections Settings [Ext. Control]

When using the EXT-CTL connector of the projector, set the external control setting to [On].

1. Select [Settings Menu] → [Ext. Control] from the main menu.
2. Press the cursor ▲/▼ button and select On/Off, then press the ENTER button to set.

   On .... Enables the EXT-CTL connector.

   Off .... Disables the EXT-CTL connector.

Ext. Control

On
Off

Setting the Projector ID Number [Projector ID]

Set identification numbers to the projectors when operating a number of projectors (GT2000/GT2000R) by remote control or when controlling a number of projectors by personal computer.

1. Select [Settings Menu] → [Projector ID] from the main menu.
2. Enter the ID number with the number buttons, then press the ENTER button to set.

   [00] will be set when using one projector.

   When using a number of projectors, set [01] to [64].

- To delete the entry, press the CLEAR button of the remote control. The setting will return to [00].

  When operating a number of projectors by remote control, also set the address of the remote control. See "Setting of the Remote Control Address" on Page E-43.

  Setting the ID of the projector to [00] permits remote control operation irrespective of the ID of the remote control.

Projector ID

No.0 - 64

Sync Signal Termination Setting [Sync Termination]

This sets the impedance of the RGB/YCbCr Input 1 connector.

This function sets whether or not the unit will accommodate a 75 ohm output (specification) impedance of the video or personal computer equipment.

1. Select [Settings Menu] → [Sync Termination] from the main menu.
2. Press the cursor ▲/▼ button and select the termination resistance value, then press the ENTER button to set.

   75 ohms ..... When the impedance of the output connector of the connected equipment is 75 ohm.

   High Impedance (Hi-Z) ..... When the impedance of the output connector of the connected equipment is not 75 ohm.

To turn off the on-screen menu display, press the MENU button. The display will return to the main menu. Press the MENU button again to turn off the on-screen menu.

Sync Termination

75Ω
Hi-Z

Selecting the Projector's Projection Method [Projection]

This selection of the projection method is made to suit the usage conditions.

Model GT2000 is designed for front projection and model GT2000R is designed for rear projection.

1. Select [Settings Menu] → [Projection] from the main menu.
2. Press the cursor ▲/▼ button and select the target projection, then press the ENTER button to set.

   Front floor ..... When the projector is placed on a table and projects from the front

   Rear ceiling ..... When the projector is suspended from the ceiling and projects from the rear

   Rear floor ..... When the projector is placed on a table and projects from the rear

   Front ceiling ..... When the projector is suspended from the ceiling and projects from the front

Projection

Front Floor
Rear Ceiling
Rear Floor
Front Ceiling

Selecting Correction and Storage of Keystone Distortion [Keystone]

Keystone distortion arises when the angles are off between the projector and screen in the vertical orientation at the time of setting up the projector. The keystone function is used in this distortion adjustment.

When the setting is permanent, setting the keystone save function to On will enable projection using this adjustment value from the next occasion.

• Adjusting Keystone Adjustment [Keystone]

1. Select [Settings Menu] → [Keystone] from the main menu.
   The adjustment bar will be displayed.
2. Press the cursor ◀ (–) / ▶ (+) button and adjust so that the left and right sides are parallel.

NOTE: *This function will not work when the input signal is not present. If this is the case, apply an signal and make the adjusment on it.*

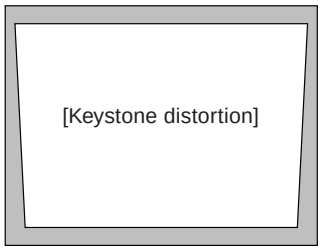

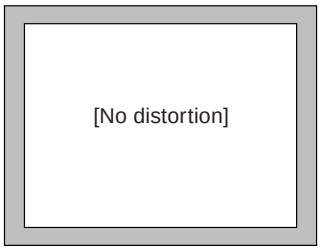

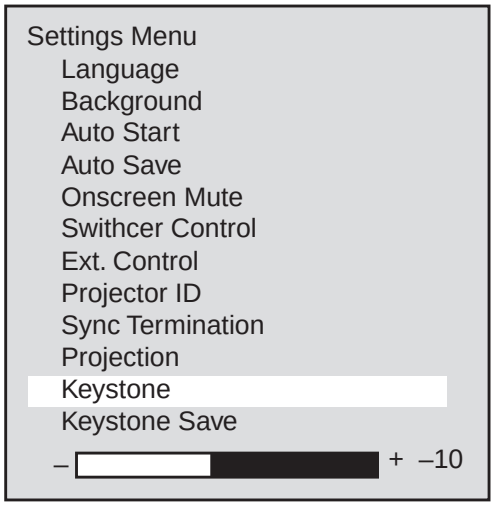

• Setting Keystone Save [Keystone Save]

1. Select [Settings Menu] → [Keystone Save] from the main menu.
2. Press the cursor ▲/▼ button and select On/Off, then press the ENTER button to set.
   On .... Enables the keystone correction value at starting time.
   Off .... Sets the keystone correction value to the default value at starting time.

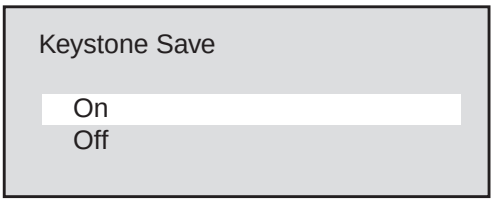

To return to the default value, press the NORMAL button of the remote control.

Press the cursor ▲/▼ button and select [Yes], then press the ENTER button to return to the default value.

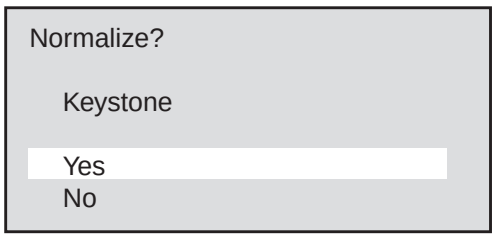

Adjustments and Settings with the Remote Control Buttons (Direct Operation)

Functions can be called directly using the remote control buttons to make adjustments and settings (without the use of the on-screen menu display).

Adjustment of the Picture

Adjustments can be made for the separate input sources (VIDEO, S-VIDEO, RGB1, and RGB2).

• Adjusting the contrast of the picture (Contrast)

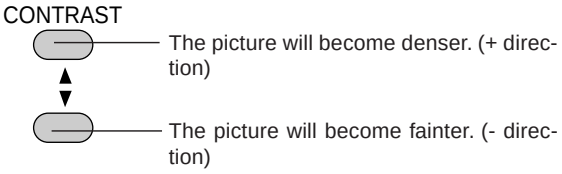

The adjustment range is from -31 to +32.

• Adjusting the brightness of the picture (Brightness)

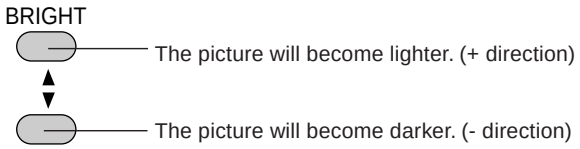

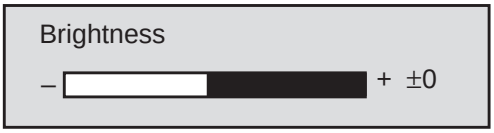

The adjustment range is from -31 to +32.

The picture adjustment data can be stored (i.e., saved) to that memory. See "Using User Memory and Channel Memory" on Page E-56.

• Returning to Standard Adjustments

Contrast and brightness will return to the standard settings.

This function is valid when the on-screen menu is not displayed.

Press the NORMAL button. The verification display will appear. Press the ENTER button to set.

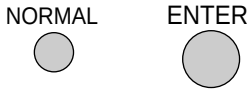

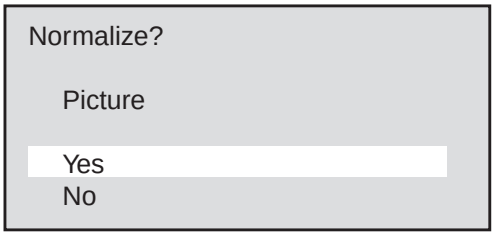

To cancel, press the cursor ▼ button, select [No], and press the ENTER button.

Display of Selected Input Information

This displays the currently selected input information.

Press the DISPLAY button to show this information.

The information remains for 10 seconds.

Press the CLEAR button to delete this display.

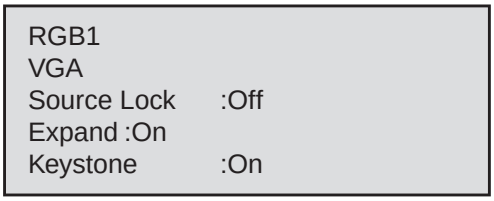

Temporarily Turning Off the On-screen Menu Display

This function is used to temporarily turn off the on-screen menu display.

This will be conveniently used when making fine picture or screen adjustments while viewing the whole screen.

Hold down the CTL button and press the DISPLAY button.

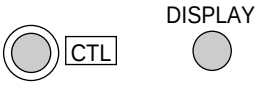

This function will also be cancelled by pressing a button other than the cursor ▲ / ▼ button, but the operation of the button that is pressed will take effect.

Using Digital Zoom Function

The LCD panel of the projector has 1366×1024 pixels.

The digital zoom function converts input signals with resolutions of less than 1366×1024 pixels to a number of pixels that is close to 1366×1024 to provide an enlarged display.

A press of the EXPAND button results in a display that corresponds to the resolution of the input signal.

A further press returns the display to the original condition.

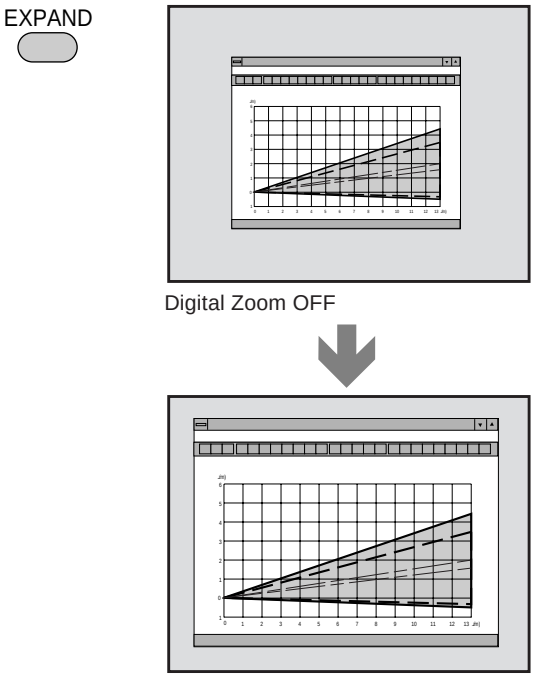

Digital Zoom OFF

Digital Zoom ON

NOTE: *When the Digital Zoom function is set to ON, the picture quality may deteriorate depending on the signal. The default setting of Digital Zoom is ON. When the Digital Zoom function is switched OFF, the Horizontal/Vertical amplitude and the Keystone adjustment are not available.*

Using Digital Enlargement

This function can provide an enlarged display of up to 8 times the size of a target portion. Hold down the CTL button and press the ZOOM button. To move the selected portion, use the cursor buttons.

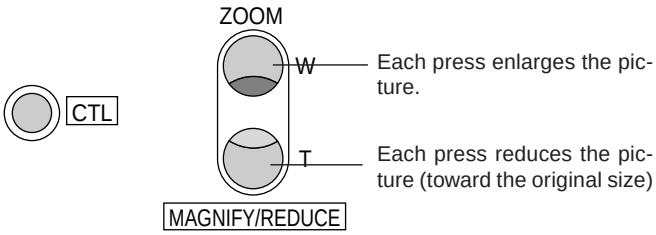

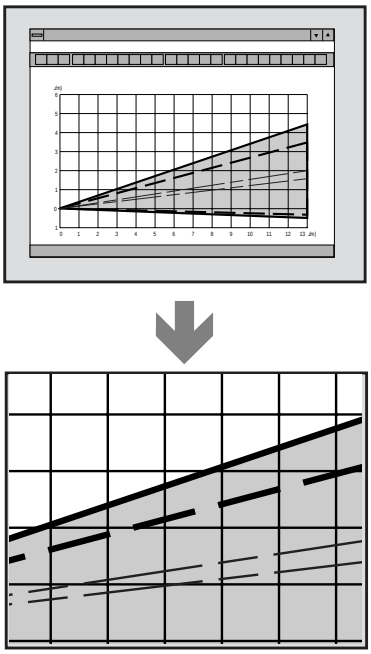

The cursor buttons are used to move the screen position.

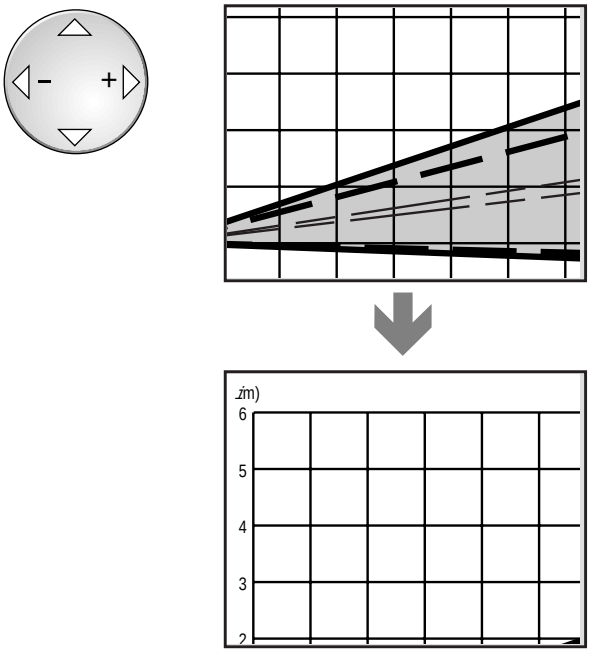

Adjusting Keystone Distortion

Keystone distortion arises when the angles are off between the projector and screen in the vertical orientation.

The keystone function is used in this distortion adjustment.

Hold the CTL button down and use the KEYSTONE +/- buttons to adjust the left and right sides so that they become parallel.

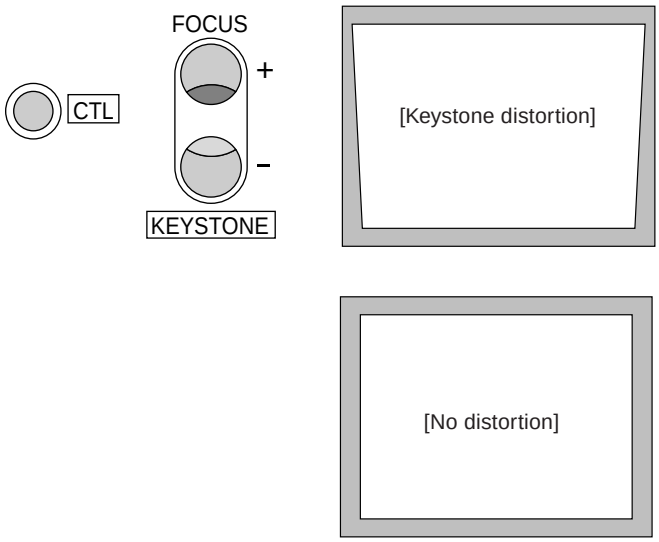

When the KEYSTONE item is set to [ON], this adjustment condition will take effect when the power is switched on. See "Selecting Keystone Distortion Correction and Storage" on Page E-40.

Temporarily Turning Off the Picture and Audio

This function is used to temporarily turn off the picture or the audio.

Picture ..... A press of the PICTURE button will turn off the picture. Another press will result in the picture being projected.

Audio ..... A press of the AUDIO button will turn off the audio. Another press will result in the audio being output.

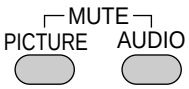

The background color of the screen will be black when the picture is turned off.

Returning the RGB Input Signal to the Standard Adjustment

This function is used when something has gone wrong with the screen at the time of RGB signal entry.

The function is valid when the on-screen menu is not being displayed.

Press the SETUP button, then press the ENTER button.

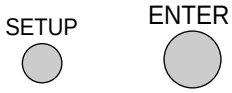

Select an item from among the adjustment data stored to standard memory that is close to the input signal.

When readjustment is necessary, adjust the screen or call up an item that is close to the input signal from within the user memory.

Upon a return to the standard adjustment, the YCbCr input setting becomes RGB input.

When a switcher is connected, the various items of the switcher return to the default settings. (The sync termination setting will be high impedance.)

Memory Search

This function is valid when the on-screen menu is not being displayed.

Press the SETUP button, then press the LOAD button.

If you've modified the settings in memory, use this function.

Remote Control Address Setting

When two or more projectors (GT2000/GT2000R) are used with wireless remote control operation, identification (ID) is given to the projectors and remote control so that other projectors are not controlled erroneously. Projectors having the same ID can be controlled.

A) Hold down the CTL button and press the Adr. button (VOLUME ▼). The address display appears.

```
Address

 RC Unit 01
```

B) Use the number buttons to enter a 2-digit ID that is the same as the ID of the projector that is being controlled. Addresses that can be specified are from 00 to 64.

Press the ENTER button to set.

When a mistake is made in the entry, press the CLEAR button and start the entry again from Step A).

* The projector ID of the main unit can be checked with [Settings Menu] → [Projector ID] of the main menu.
* Setting the ID of the remote control to 00 permits remote control operation irrespective of the ID of the projector.
* If the batteries are removed from the remote control, the remote ID will return to "00".

ADJUSTING THE PICTURE AND THE AUDIO (Picture)

These functions adjust the picture and audio with the on-screen menu display.

When the input signal is selected with the user memory or the channel memory and the auto memory save function is set to [On], the adjustment data is overwritten.

Default Picture Settings

Picture settings at the time of shipping from the factory are as described below.

Please set required items.

Press the MENU button to display [Main Menu], select [Picture] with the cursor button, then press the ENTER button to display the picture.

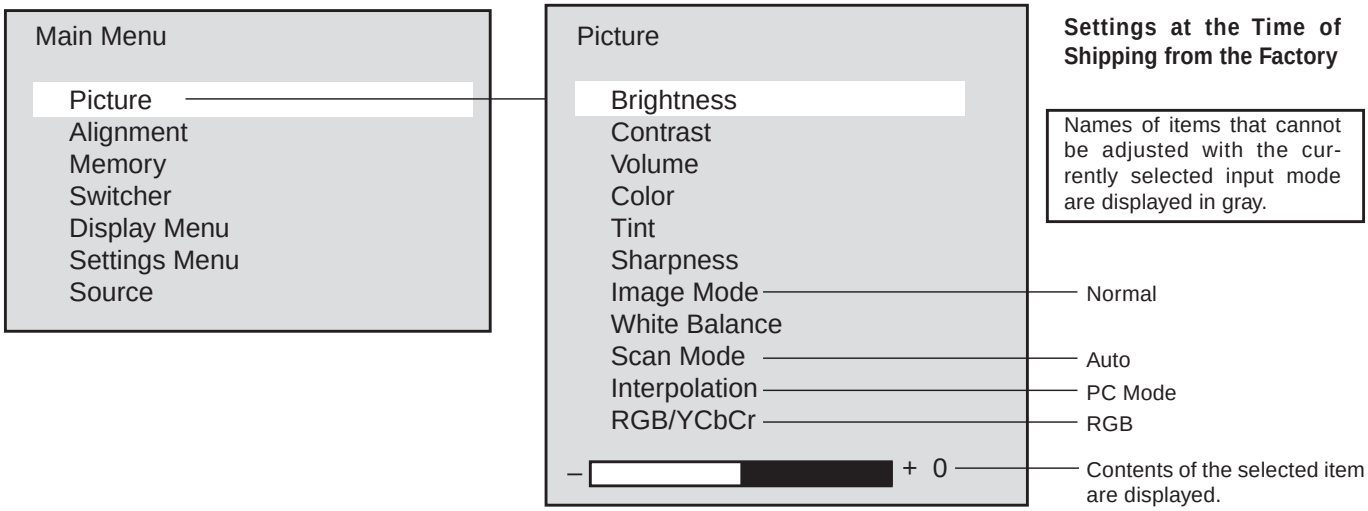

Adjusting the Picture (Brightness, Contrast, Color, Tint, and Sharpness)

Adjust these items to an optimum level in conjunction with the input image.

Select [Picture] from the main menu, then press the ENTER button.

When the item to be adjusted is selected, the adjustment bar of the selected item is displayed at the bottom edge of the display.

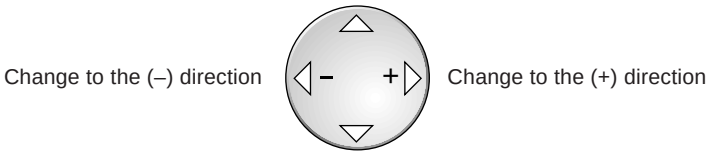

The various adjustment ranges are from -31 to +32.

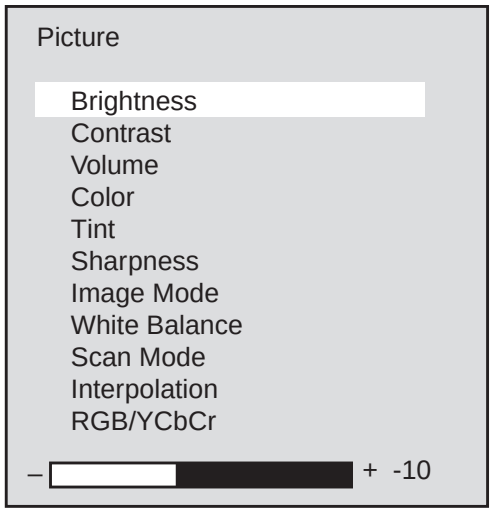

Item	◀ (–) Button	▶ (+) Button	Notes
Brightness	Becomes darker	Becomes lighter	——
Contrast	Picture becomes fainter	Picture becomes denser	——
Color	Color becomes paler	Color becomes deeper	RGB input does not apply
Tint	Becomes more reddish	Becomes more greenish	RGB, PAL and SECAM input do not apply
Sharpness	Picture becomes softer	Picture becomes more distinct	RGB input does not apply

Adjusting the White Balance (White Balance)

This function corrects the black and white level of the input signal and adjusts the color reproducibility.

Select [Picture] --> [White Balance] from the main menu.

Change to the (–) direction 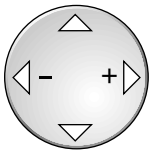

Change to the (+) direction

The various adjustment ranges are from -31 to +32.

Item	Contents
Brightness R	Adjustment of the black level of the picture
Brightness G	
Brightness B	
Contrast R	Adjustment of the white level of the picture
Contrast G	
Contrast B	

Adjusting the Volume (Volume)

Select [Picture]→[Volume] from the main menu.

When the item to be adjusted is selected, the adjustment bar of the selected item is displayed at the bottom edge of the display.

Adjust the volume with the cursor ◀ (–)/ ▶ (+) buttons.

The adjustment range is from 0 to 63.

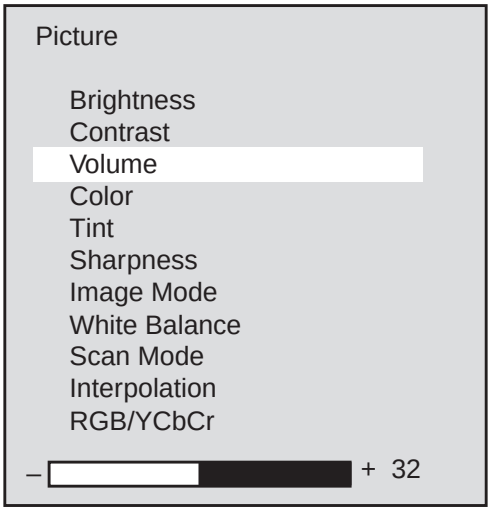

Returning the Picture Adjustments to the Standard Settings

This function returns the adjustments of the selected items (i.e., brightness, contrast, color, tint, sharpness, and white balance) to the standard adjustments suited to the input mode.

Example: Returning the contrast to the standard setting.

Select [Picture]→[Contrast] from the main menu.

Press the NORMAL button. The verification display will appear. Press the ENTER button to set.

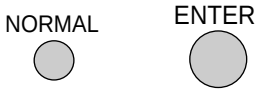

To cancel, press the cursor ▲ / ▼ button, select [No], then press the ENTER button.

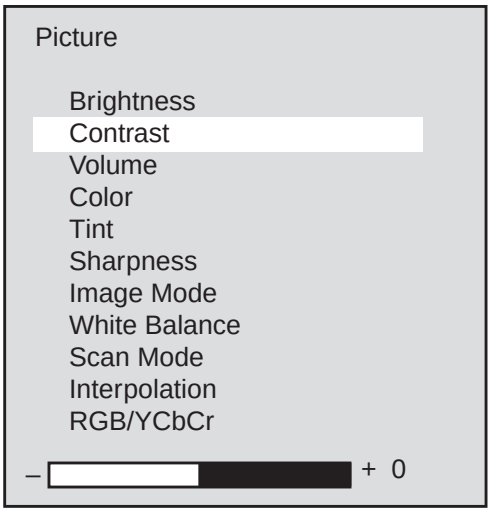

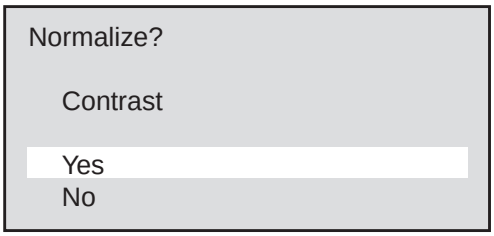

Selecting the Image Mode (Image Mode)

These are the picture adjustment modes available with the projector. Select the mode that is suited to personal computer text, or the projected image of a video, etc.

Select [Picture]→[Image Mode] from the main menu.

Select the image mode with the cursor ▲/▼ button. Press the ENTER button at the desired image mode.

Normal ..... This is set for RGB input.

Natural 1
Natural 2 — This is set for natural pictures.
Natural 3

DOC CAM ... This is set for the use of a monitor camera when the screen is dark.

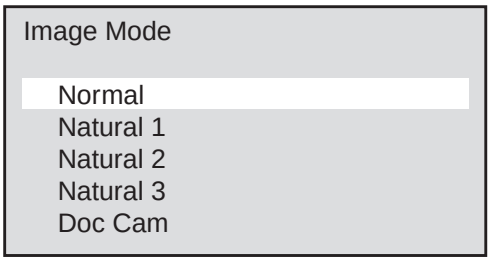

Selecting the Scan Mode (Scan Mode)

This function selects whether there is a skip to every other scanning line, or whether scanning lines are reproduced in order and projected.

Select [Picture]→[Scan Mode] from the main menu.

Select the scan mode with the cursor ▲/▼ button, then press the ENTER button.

Auto ..... Automatic switching to suit the image.

Non Interlaced ..... Scanning lines are scanned in order to reproduce the image.
Suited for still pictures.

Interlaced Video ..... Every other scanning line in skipped to reproduce the image.
Suited for moving pictures.

Interlaced PC ..... Every other scanning line of the picture of the personal computer input is skipped to reproduce the image.

Scan Mode

Auto
Non Interlace
Interlace Video
Interlace PC

Selecting Smoothing (Interpolation)

Select the item that suits the projected image of the personal computer or video signal, etc.

Select [Picture]→[Interpolation] from the main menu.

Select PC Mode or Video Mode with the cursor ▲/▼ button, then press the ENTER button.

PC Mode ..... Set this mode when importance is placed upon high-definition images such as with workstations.

Video Mode ..... Set this mode when importance is placed upon natural pictures such as with video images.

Interpolation

PC Mode
Video Mode

NOTE: *When a personal computer is selected and the Video Mode is set, the picture may be disturbed depending on the signal. Should this happen, please use the PC Mode.*

Selecting RGB/YCbCr (RGB/YCbCr)

This function sets the RGB 1/2 and YCbCr 1 input modes of the RGB input 1/2 connector.

These settings are selected when there is input of a color-difference signal from a DVD player, etc.

Select [Picture]→[RGB/YCbCr] from the main menu and press the ENTER button.

Select RGB/YCbCr with the cursor ▲/▼ button.

RGB ..... RGB input mode (when projecting from personal computers and work stations)

YCbCr ..... YCbCr input mode (when projecting from DVD players)

When the RGB input is returned to the standard adjustment with the SETUP and ENTER buttons of the remote control, the RGB/YCbCr setting will be RGB input.

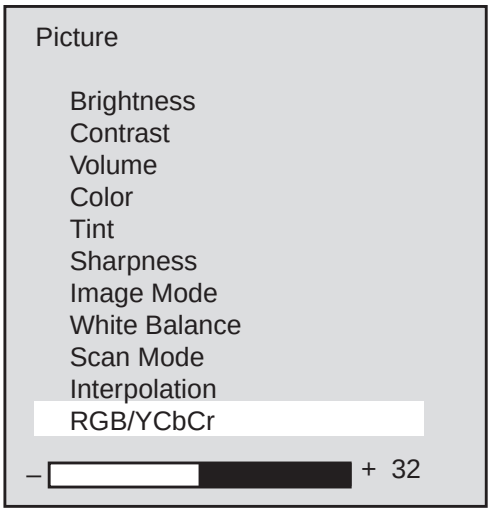

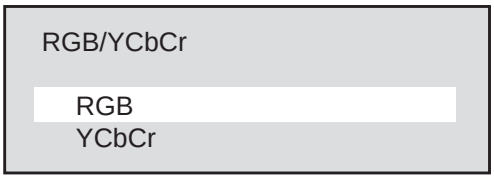

Direct Selection

You can select RGB or YCbCr input directly with the remote control.

To do, press and hold CTL, then press RGB1 (or RGB2).

A press of CTL and RGB 1 (or RGB 2) buttons toggles between RGB and YCbCr.

Note that this setting is not saved even though the auto save function is set to "ON".

ADJUSTING THE SCREEN (Alignment)

When the input signal is selected with the user memory or the channel memory and the auto memory save function is set to [On], the adjustment data is overwritten.

Default Screen Adjustment Settings

Settings at the time of shipping from the factory are as described below.

Please set required items.

Press the MENU button to display [Main Menu], select [Alignment] with the cursor button, then press the ENTER button to display the alignment.

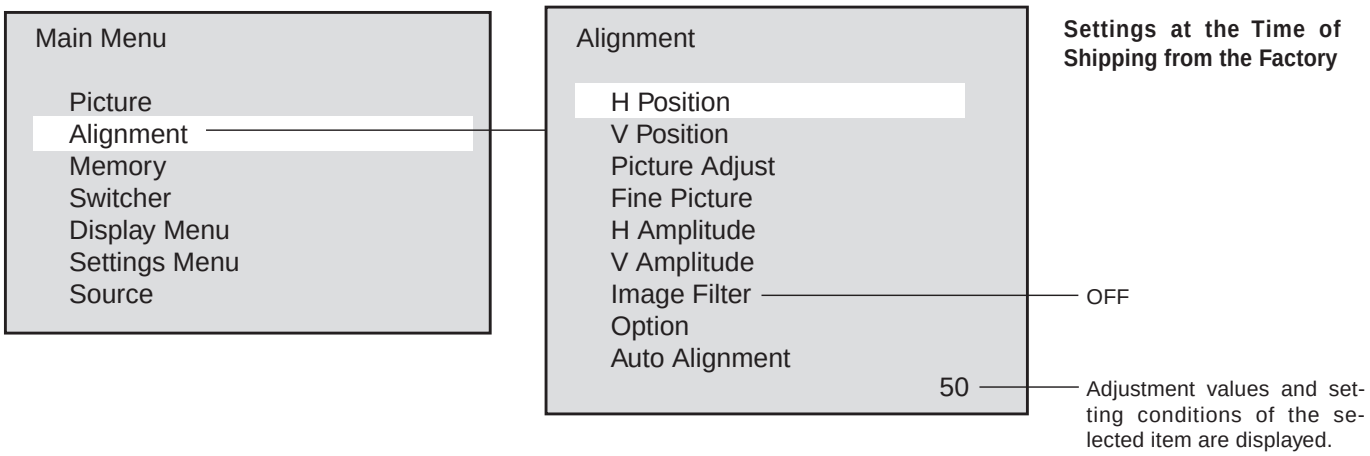

Screen Adjustment Procedure

1. Input an RGB signal.

   It will be projected as a standard signal.

2. Set Digital Zoom function to OFF.

   Press the EXPAND button to set this to OFF. See Page E-42

3. Adjust the clock frequency and the horizontal phase. See Page E-51 and E-52.

4. Set Digital Zoom function to ON.

   Press the EXPAND button to set this to ON.

5. Adjust the screen size and the display position.

   When the screen size is not suitable, adjust it with the horizontal amplitude and the vertical amplitude. See Page E-53.

   When the position is off, adjust the horizontal position and the vertical position. See Page E-50.

Adjusting the Screen Position (Horizontal Position and Vertical Position)

• Adjusting the Horizontal Position

Select [Alignment]→[H Position] from the main menu.

When the item to be adjusted is selected, the adjustment value of the selected item is displayed at the bottom edge of the display.

Adjust the horizontal position with the cursor ◀ (–)/ ▶ (+) button.

The adjustment range will differ depending on the input signal.

Each press will move the horizontal position one pixel. Holding down the button will move the horizontal position continuously.

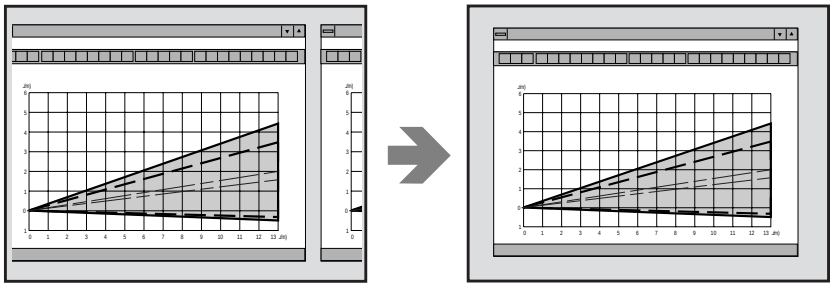

Alignment

H Position
V Position
Picture Adjust
Fine Picture
H Amplitude
V Amplitude
Image Filter
Option
Auto Alignment

50

• Adjusting the Vertical Position

Select [Alignment]→ [V Position] from the main menu.

When the item to be adjusted is selected, the adjustment value of the selected item is displayed at the bottom edge of the display.

Adjust the vertical position with the cursor ◀ (–)/ ▶ (+) button.

The adjustment range will differ depending on the input signal.

Each press will move the vertical position one pixel. Holding down the button will move the vertical position continuously.

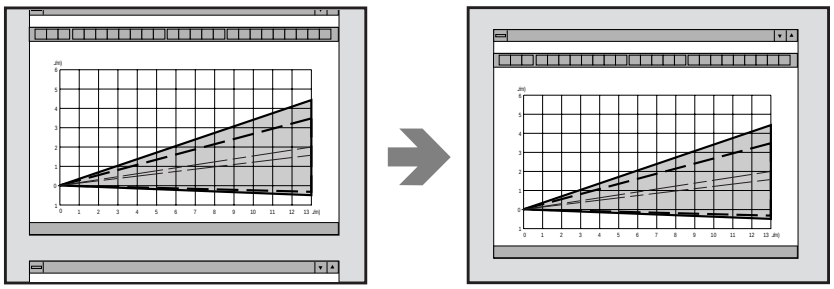

Alignment

H Position
V Position
Picture Adjust
Fine Picture
H Amplitude
V Amplitude
Image Filter
Option
Auto Alignment

120

Making Adjustments While Viewing the Entire Screen

Hold down the CTL button and press the DISPLAY button to temporarily turn off the on-screen menu display. Now, only the cursor ◀ (–)/ ▶ (+) button will function. When another button is pressed, the menu will come back on.

Adjusting the Horizontal Pixel Size and Phase (Picture Adjust and Fine Picture)

Before making the adjustment, press the EXPAND button and turn OFF the Digital Zoom function.

Adjust the clock frequency, then adjust the horizontal position.

• Adjusting the Clock Frequency (Picture Adjust)

This function adjusts the pixel size of the computer and the pixel size of the LCD of the projector so that they become the same size.

Select [Alignment]→ [Picture Adjust] from the main menu.

When the item to be adjusted is selected, the adjustment value of the selected item is displayed at the bottom edge of the display.

Adjust the clock frequency with the cursor ◀ (–) / ▶ (+) button.

The optimum adjustment value is where the brightness of the screen becomes constant (i.e., the bright and dark vertical bands disappear).

The adjustment range will differ depending on the input signal.

Holding down the button will change the clock frequency continuously. Fine adjustments can be made by single presses of the button.

Alignment

H Position
V Position
Picture Adjust
Fine Picture
H Amplitude
V Amplitude
Image Filter
Option
Auto Alignment

1420

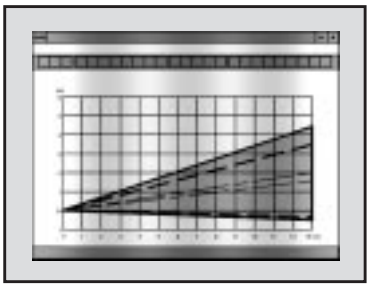

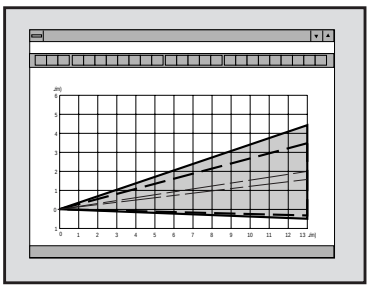

• Adjusting the Horizontal Phase (Fine Picture)

This function adjusts the phase of the pixels of the computer and the phase of the pixels of the LCD of the projector so that they are the same phase. The adjustment is made to the point at which the screen color infidelity and flicker are at a minimum.

Select [Alignment] → [Fine Picture] from the main menu.

When the item to be adjusted is selected, the adjustment value of the selected item is displayed at the bottom edge of the display.

Alignment

H Position
V Position
Picture Adjust
Fine Picture
H Amplitude
V Amplitude
Image Filter
Option
Auto Alignment

183

Adjust the horizontal phase with the cursor ◀ (–)/ ▶ (+) button.

The optimum adjustment value is where the screen color infidelity and flicker are at a minimum.

The adjustment range is from 0 to 255.

Holding down the button will change the horizontal phase continuously. Fine adjustments can be made by single presses of the button.

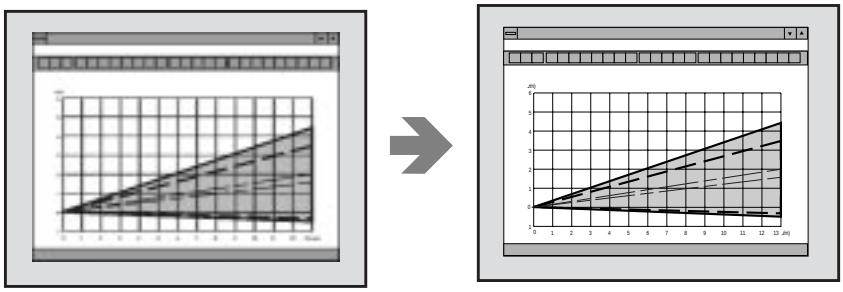

Making Adjustments While Viewing the Entire Screen

Hold down the CTL button and press the DISPLAY button to temporarily turn off the on-screen menu display. Now, only the cursor ◀ (–) / ▶ (+) button will function. When another button is pressed, the menu will come back on.

Last press the EXPAND button and turn on the Digital Zoom function.

Changing the Display Size (Horizontal Amplitude and Vertical Amplitude)

The projector already stores the standard personal computer and work station resolutions in standard memory. When an RGB signal is input, the closest resolution is selected from among those stored and the signal is displayed. (When the information is stored in the user memory, it is searched from the user memory.) It is for this reason that when the scanning frequency differs from the value of the standard memory, the display area or aspect ratio will also differ. The horizontal magnification and vertical magnification are used to adjust this.

• Adjusting the Horizontal Amplitude

This function adjusts the horizontal display size to suit the screen.

Select [Alignment] → [H Amplitude] from the main menu.

When the item to be adjusted is selected, the adjustment value of the selected item is displayed at the bottom edge of the display.

Adjust the horizontal amplitude with the cursor ◀ (–)/ ▶ (+) button.

The adjustment range will differ depending on the input signal.

Holding down the button will result in a continuous change. Fine adjustments can be made by single presses of the button.

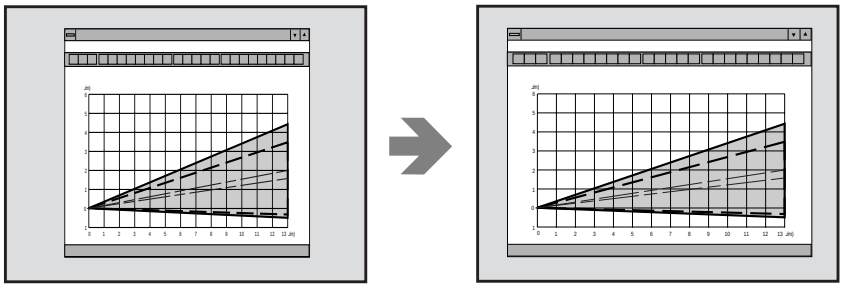

Alignment

H Position
V Position
Picture Adjust
Fine Picture
H Amplitude
V Amplitude
Image Filter
Option
Auto Alignment

1368

• Adjusting the Vertical Amplitude

This function adjusts the vertical display size to suit the screen.

Select [Alignment] → [V Amplitude] from the main menu.

When the item to be adjusted is selected, the adjustment value of the selected item is displayed at the bottom edge of the display.

Adjust the vertical amplitude with the cursor ◀ (–)/ ▶ (+) button.

The adjustment range will differ depending on the input signal.

Holding down the button will result in a continuous change. Fine adjustments can be made by single presses of the button.

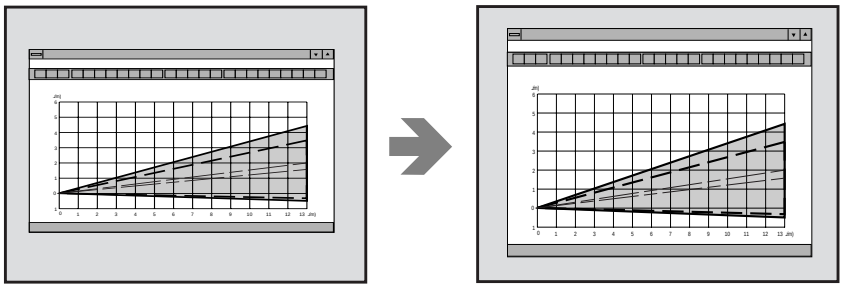

Alignment

H Position
V Position
Picture Adjust
Fine Picture
H Amplitude
V Amplitude
Image Filter
Option
Auto Alignment

1024

Change the horizontal or the vertical amplitude when the aspect ratio of the screen differs from normal (i.e., a circle has become and ellipse).

• Reducing Noise (Image Filter)

This function reduces video noise.

Select [Alignment] → [Image Filter] from the main menu, then press the ENTER button. The image filter selection display will appear.

Select On/Off with the cursor ▲/▼ button.

On ..... The low-pass filter is applied.

Off ..... The filter is removed.

Screen adjustments are possible even when the filter is On.

Alignment

H Position
V Position
Picture Adjust
Fine Picture
H Amplitude
V Amplitude
Image Filter
Option
Auto Alignment

Filter

On
Off

Other Screen Adjustments (Vertical Phase, Skew Correction, Sync Position, and Clamp Timing)

Select [Alignment] → [Option] from the main menu, then press the ENTER button. The option menu will be displayed.

• Vertical Phase

This function adjusts the vertical pixel phase when an irregularity arises while making fine vertical movements of the screen or in the interlaced display.

Select [V Phase] with the cursor ▲/▼ button.

When the item to be adjusted is selected, the adjustment value of the selected item is displayed at the bottom edge of the display.

Adjust to a normal condition with the cursor ◀ (–)/ ▶ (+) button.

The adjustment range is from 0 to 7.

• Skew Correction

This function adjusts the vertical bending of the screen.

Select [Skew Correction] with the cursor ▲/▼ button.

When the item to be adjusted is selected, the adjustment value of the selected item is displayed at the bottom edge of the display.

Adjust the bending with the cursor ◀ (–)/ ▶ (+) button.

The adjustment range is from 0 to 8.

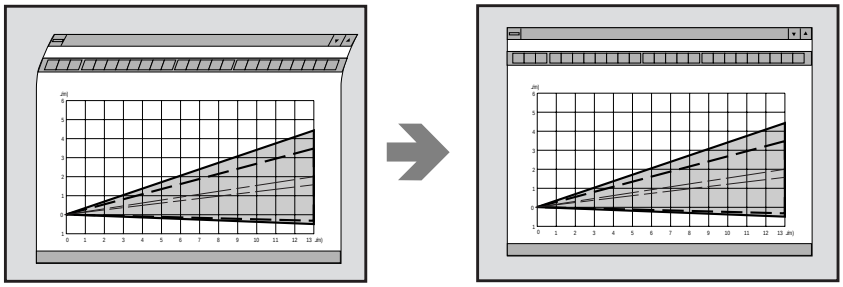

Alignment

H Position
V Position
Picture Adjust
Fine Picture
H Amplitude
V Amplitude
Image Filter
Option
Auto Alignment

Option

V Phase
Skew Correction
Sync Position
Clamp Timing

Option

V Phase
Skew Correction
Sync Position
Clamp Timing

• Sync Position

This function selects whether the leading edge or the trailing edge of the horizontal sync pulse is set to the standard position (i.e., the PLL phase basis of comparison) and switches the sync position when jitter appears on the screen.

Select [Sync Position] with the cursor ▲/▼ button.

When an item is selected, its adjustment values are indicated on the right bottom of the menu.

While viewing the screen, select the item that results in the least distortion with the cursor ◀ (–)/ ▶ (+) button.

The adjustment values are 0 or 1.

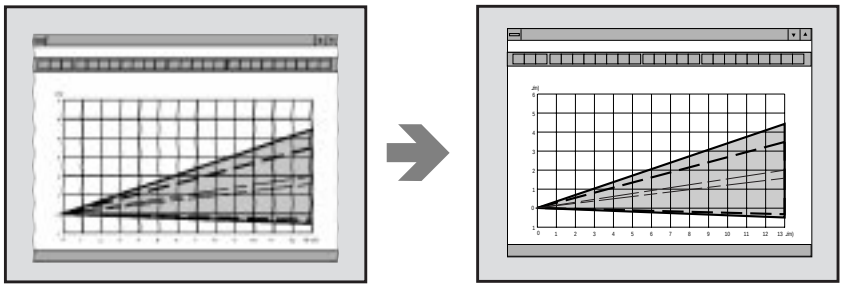

Option

V Phase
Skew Correction
Sync Position
Clamp Timing

• Clamp Timing

This function sets the standard position of the black level of the picture and is used to set the level of screen brightness to an optimum level.

Select [Clamp Timing] with the cursor ▲/▼ button.

Selecting sync position moves the horizontal position. Adjust the horizontal position.

While viewing the screen, select 0 or 1 with the cursor ◀ (–)/ ▶ (+) button.

Option

V Phase
Skew Correction
Sync Position
Clamp Timing

Adjusting the Alignement Automatically (Auto Alignment)

This function automatically adjusts the clock frequency, the horizontal/vertical position and H/V amplitude.

Depending on the pattern, adjustment may not be possible.

Select [Alignment] → [Auto Alignment] from the main menu, then press the ENTER button. The verification display will appear.

Select Yes/No with the cursor ▲/▼ button.

Repeat until an optimum screen is obtained.

NOTE: *Automatic adjustment will not function with VIDEO or S-VIDEO input. When using RGB input, automatic adjustment will not function when NTSC, PAL/SECAM, or HDTV is input.*

Alignment

H Position
V Position
Picture Adjust
Fine Picture
H Amplitude
V Amplitude
Image Filter
Option
Auto Alignment

Auto Alignment

On
Off

USING USER MEMORY AND CHANNEL MEMORY (Memory)

Before Using the Memory Function

The projector uses a microprocessor to automatically identify the input signal. Therefore, it is necessary to set and store in the microprocessor the adjustment conditions of such settings as the alignments and picture settings that match the input signal and that an optimum picture can be reproduced.

The projector is equipped with five kinds of memory. There is standard memory that cannot be overwritten, user memory to which the user can freely write or overwrite (and to which switcher channels can be registered), special switcher channel memory that is used when this main unit and a number of switchers are connected and used together , the default area in a one-to-one correspondence with areas of the standard memory, and last memory that stores the latest settings for each source (RGB1, RGB2, Video, and S-Video)

Types of Memory

• Standard Memory (Preset at Time of Shipping)

Video signals of the type used in personal computers and work stations currently on the market have been registered in the projector as standard data (and cannot be overwritten). See "Displayable Video Signals" on Page E-82.

When displaying personal computer video signals (resolution/frequency) that have not been registered to standard memory, make the screen and picture adjustments and then register them to user memory.

• User Memory

When data that has been adjusted by the user is stored to user memory, it can be called back and used at any time.

A maximum of 100 items of screen and/or picture adjustment or setting data can be registered.

• Channel Memory

This special memory for switchers is used to simultaneously register the screen adjustment data and the data of the switcher when the projector is used in conjunction with a switcher.

A maximum of 100 channels (10 per switcher with max. of 10 switchers) of setting data (for the various pieces of equipment that are connected to the switchers) and the screen and picture adjustment data (adjusted by the projector) can be registered.

• Default Area

This is a rewritable memory that is in a one-to-one correspondence with areas of the standard memory.

The projector searches the settings in the default area before the standard memory.

The factory shipped default area settings are the same as in the standard memory.

• Last Memory

This is a memory that stores the last settings for each source (RGB1, RGB2, Video, and S-Video).

Switching sources will store the settings in memory. For this reason, even if the memory is not used, returning to its original source will store the adjustments in memory.

Automatic Searches of Memory

The channel memory is searched first when used with the switcher (s).

When the input is switched, the projector searches the user memory for the existence of applicable registration memory during input selection (of input source) or switcher slot selection (RGB and RGB2 only). When more than one such memory item appear, the most recent memory number is selected. When there is no such memory item, the unit searches irrespective of input selection or slot selection. When there is no applicable memory item in user memory, the default area and a standard memory search is performed in this order (but there will not be a search when there is a skip setting).

Selecting Memory Display

The user memory is displayed by pressing the MENU button and displaying [Main Menu], selecting [Memory] with the cursor button, and then pressing the ENTER button.

To switch between user memory and channel memory displays, hold down the CTL button and select with the cursor ▲/▼ button.

Switch pages with the cursor ◀ (–)/ ▶ (+) button. (There are 10 pages of user memory and 10 pages of channel memory.)

To display the list number selection and the registration menu, use the cursor ▲/▼ button to align the selection bar with the desired list number, then press the ENTER button.

Main Menu

- Picture
- Alignment
- Memory
- Switcher
- Display Menu
- Settings Menu
- Source

User Memory

No	Name	Source	Slot	P01/10 Lock
00	CUTOM 0001	RGB1		Off
01				
02				
03	CUTOM 0004	S-VIDEO		Off
04				
05				
06	CUTOM 0007	YCbCr1		On
07	CUTOM 0008	RGB2		On
08				
09	CUTOM 0010	VIDEO		Off

Channel Memory

No	Name	Source	P01/10 Lock
00	CUTOM 0001	RGB1	Off
01			
02			
03	CUTOM 0004	S-VIDEO	Off
04			
05			
06	CUTOM 0007	YCbCr1	On
07	CUTOM 0008	RGB2	On
08			
09	CUTOM 0010	VIDEO	Off

Signal Entry

- Entry Copy
- Entry Move
- Entry Delete
- Change Defalut
- Memory edit
- Load
- Store

Selecting the Various Items and Switchers

• Selecting User Memory

No ..... List number

Name ..... Signal name entered by the user

Source ..... This is the set input mode.
(RGB 1, RGB 2, YCbCr1, YCbCr2, VIDEO, and S-VIDEO)

Slot ..... This is the slot number of the channel. It is termed the channel in this manual.

04 indicates the selection of the equipment that is connected to the number 04 slot of the switcher.

Currently selected page

User Memory

P01/10 — Total number of pages

No		Name	Source	Slot
Lock				
00	*	CUTOM 0007	RGB1	04
On				
01		CUTOM 0008	RGB2	07/08
Off				
02				

The [*] display appears when the skip setting is on.

07/08 indicates the selection of the equipment that is connected to the number 8 slot of the master switcher, which is connected to the number 7 slot of the slave switcher.

Lock ..... This is the on/off setting of the auto scan function at the time of input signal switching. It is selected with the edit menu.

• Selecting Channel Memory

In user memory, the slot specification differs.

Currently selected page

Channel Memory

P01/10 — Total number of pages

No	Name	Source
Lock		
00	CUTOM 0007	RGB1
On		
01	CUTOM 0008	RGB2
Off		

In channel memory, the memory number becomes the channel number, which corresponds with the slot number of the switcher.

In signal registration, this number is selected and registration is made to this number.

Settings will differ depending on the switcher connection method. See "Changing the Slot Number of the Switcher (slot) Switcher Control" on Page E-67.

When the Setting is [SW 1 Level] (One Unit)

When the Setting is [SW 1 Level] (One Unit)

Channel numbers 10 through 19 correspond with switcher slot numbers 01 through 10. (Note that channel 10 will be slot 10, and channel 11 will be slot 01.)

When the Setting is [SW 2 Level] (Two or More Units)

Channel numbers 00 through 09 correspond with slot numbers 1 through 10 of the slave switcher that is connected to slot 10 of the master switcher.

Channel numbers 10 through 19 correspond with slot numbers 1 through 10 of the slave switcher that is connected to slot 1 of the master switcher.

Channel numbers 90 through 99 correspond with slot numbers 1 through 10 of the slave switcher that is connected to slot 9 of the master switcher.

Storing the Adjustment Data (Store)

This function is used to store the screen and picture adjustment data currently being projected.

The signal name and other data can be edited later.

1. Project the Picture of the Input Equipment

   Select [Memory] → [User Memory] or [Channel Memory] from the main menu.

   The user memory or channel memory will be displayed.

   See "Selecting Memory Display" on Page E-57 for details.

User Memory

P01/10

No	Name	Source	Slot	Lock
00	CUTOM 0001	RGB1		Off
01				
02				
03	CUTOM 0004	S-VIDEO		Off
04				
05				
06	CUTOM 0007	YCbCr1		On
07	CUTOM 0008	RGB2		On
08				
09	CUTOM 0010	VIDEO		Off

2. Select the Number to Be Stored

   Press the remote control ▲/▼ button and select the list number or the channel number, then press the ENTER button.

   The display will change to the signal registration menu.

   (When input selection and projection are conducted from the user memory or the channel memory, the selection cursor will move to that number.)

User Memory

P01/10

No	Name	Source	Slot	Lock
00	CUTOM 0001	RGB1		Off
01				
02				
03	CUTOM 0004	S-VIDEO		Off
04				
05				
06	CUTOM 0007	YCbCr1		On
07	CUTOM 0008	RGB2		On
08				
09	CUTOM 0010	VIDEO		Off

3. Storing the Adjustment Data

   1) Press the remote control ▲/▼ button, select [Store], then press the ENTER button.

      The display will change to the store verification display.

   2) Press the remote control ▲/▼ button, select Yes/No, then press the ENTER button.

   * When a registered number is selected, the overwrite verification display will appear.

Signal Entry
- Entry Copy
- Entry Move
- Entry Delete
- Change Defalut
- Memory edit
- Load
- Store

Store?
- Yes
- No

Overwrite?
- Yes
- No

   This ends the data storage procedure.

   To turn off the display, press the MENU button. When the display has returned to the main menu, press the MENU button again to turn off the display.

Data Reading of Registration Signals (Load)

Adjustment and setting data are registered to suit the purpose of the external equipment in the user memory and channel memory. This allows the input to be switched and projected immediately when the projector is used in a system or some other configuration. The desired adjustment and setting data can also be called without switching the input.

1. Displaying the Memory Display

   Select [Memory] → [User Memory] or [Channel Memory] from the main menu.

   The user memory or channel memory will be displayed.

   See "Selecting Memory Display" on Page E-57 for details.

User Memory

P01/10

No	Name	Source	Slot	Lock
00	CUTOM 0001	RGB1		Off
01				
02				
03	CUTOM 0004	S-VIDEO		Off
04				
05				
06	CUTOM 0007	YCbCr1		On
07	CUTOM 0008	RGB2		On
08				
09	CUTOM 0010	VIDEO		Off

2. Select the Desired Number

   Press the remote control ▲/▼ button and select the list number or the channel number, then press the ENTER button.

   The display will change to the signal registration menu.

User Memory

P01/10

No	Name	Source	Slot	Lock
00	CUTOM 0001	RGB1		Off
01				
02				
03	CUTOM 0004	S-VIDEO		Off
04				
05				
06	CUTOM 0007	YCbCr1		On
07	CUTOM 0008	RGB2		On
08				
09	CUTOM 0010	VIDEO		Off

3. Retrieving the Signal Data

   Press the remote control ▲/▼ button and select [Load].

   Retrieving All the Data

   Press the ENTER button.

   The display will change to the load verification display.

   Press the remote control ▲/▼ button, select Yes/No, then press the ENTER button.

   Retrieving Data Other than Source Data

   (Data is called without performing input switching.)

   Hold down the CTL button and press the ENTER button.

   The display will change to the data load verification display.

   Press the remote control ▲/▼ button, select Yes/No, then press the ENTER button.

   This ends the data retrieving procedure.

   At this time, auto search during input signal switching will be invalid. (Lock On condition.)

Signal Entry
- Entry Copy
- Entry Move
- Entry Delete
- Change Defalut
- Memory edit
- Load
- Store

Load?
- Yes
- No

Data Load?
- Yes
- No

Copying All the Data (Entry Copy)

This function copies the registered signal data (i.e., the copy source) to the selected number (i.e., the copy destination).

1. Displaying the Signal Registration Menu Display

   Select [Memory] → [User Memory] or [Channel Memory] from the main menu, then press the ENTER button.

   The signal registration menu display will appear.

   See "Selecting Memory Display" on Page E-57 for details.

```
Signal Entry

  Entry Copy
  Entry Move
  Entry Delete
  Change Defalut
  Memory edit
  Load
  Store
```

2. Copying

   Press the remote control ▲/▼ button and select [Entry Copy], then press the ENTER button.

   The display will change to the user memory or the channel memory display.

   "Copy: Copy Source Selection" will appear at the bottom of the display.

```
User Memory
                                    P01/10
No   Name          Source    Slot   Lock
00   CUTOM 0001    RGB1             Off
01
02
03   CUTOM 0004    S-VIDEO          Off
04
05
06   CUTOM 0007    YCbCr1           On
07   CUTOM 0008    RGB2             On
08
09   CUTOM 0010    VIDEO            Off
Entry Copy: Select Source
```

   1) Press the remote control ▲/▼ button and select the copy source number, then press the ENTER button.

      "Copy: Copy Destination Selection" will appear at the bottom of the display.

```
User Memory
                                    P01/10
No   Name          Source    Slot   Lock
00   CUTOM 0001    RGB1             Off
01
02
```

   2) Press the remote control ▲/▼ button and select the copy destination number, then press the ENTER button.

      When the signal data has already been registered to the copy destination, the verification display will appear. Press the remote control ▲/▼ button and select Yes/No, then press the ENTER button.

```
User Memory
P01/10
No   Name          Source    Slot   Lock
00   CUTOM 0001    RGB1             Off
01   CUTOM 0007    YCbCr1           On
02
```

This ends the copy procedure.

To turn off the display, press the MENU button. The display will return to the main menu. A further press of the MENU button will turn off the display.

```
Overwrite?

  Yes
  No
```

Moving Data (Entry Move)

This function moves the registered signal data (i.e., the move source) to the selected number (i.e., the move destination).

1. Displaying the Signal Registration Menu Display

   Select [Memory] → [User Memory] or [Channel Memory] from the main menu, then press the ENTER button.

   The signal registration menu display will appear.

   See "Selecting Memory Display" on Page E-57 for details.

```
Signal Entry
   Entry Copy
   Entry Move
   Entry Delete
   Change Defalut
   Memory edit
   Load
   Store
```

2. Moving

   Press the remote control ▲/▼ button and select [Entry Move], then press the ENTER button.

The display will change to the user memory or the channel memory display.

"Move: Move Source Selection" will appear at the bottom of the display.

1) Press the remote control ▲/▼ button and select the move source number, then press the ENTER button.

   "Move: Move Destination Selection" will appear at the bottom of the display.

```
User Memory
                                P01/10
No  Name        Source   Slot   Lock
00  CUTOM 0001  RGB1           Off
01
02
03  CUTOM 0004  S-VIDEO        Off
04
05
06  CUTOM 0007  YCbCr1         On
07  CUTOM 0008  RGB2           On
08
09  CUTOM 0010  VIDEO          Off
Entry Move: Select Source
```

2) Press the remote control ▲/▼ button and select the move destination number, then press the ENTER button.

   When the signal data has already been registered to the move destination, the verification display will appear. Press the remote control ▲/▼ button and select Yes/No, then press the ENTER button.

```
User Memory
                                P01/10
No  Name        Source   Slot   Lock
00  CUTOM 0001  RGB1           Off
01
02
```

This ends the move procedure.

To turn off the display, press the MENU button. The display will return to the main menu. A further press of the MENU button will turn off the display.

```
User Memory
P01/10
No  Name        Source   Slot   Lock
00  CUTOM 0001  RGB1           Off
01  CUTOM 0007  YCbCr1         On
02
03  CUTOM 0004  S-VIDEO        Off
04
05
06
07  CUTOM 0008  RGB2           On
08
09  CUTOM 0010  VIDEO          Off
```

```
Overwrite?

   Yes
   No
```

Deleting a Range of Data (Entry Delete)

This function specifies the range that is to be deleted and deletes the signal data.

1. Displaying the Signal Registration Menu Display

   Select [Memory] → [User Memory] or [Channel Memory] from the main menu, then press the ENTER button.

   The signal registration menu display will appear.

   See "Selecting Memory Display" on Page E-57 for details.

```
Signal Entry
    Entry Copy
    Entry Move
    Entry Delete
    Change Defalut
    Memory edit
    Load
    Store
```

2. Deleting

   Press the remote control ▲/▼ button and select [Entry Delete], then press the ENTER button.

   The display will change to the user memory or the channel memory display.

   "Delete: Starting No. Selection" will appear at the bottom of the display.

   1) Press the remote control ▲/▼ button and select the starting number of the deletion, then press the ENTER button.

      "Delete: Ending No. Selection" will appear at the bottom of the display.

```
User Memory
                                                P01/10
No   Name          Source    Slot        Lock
00   CUTOM 0001    RGB1                  Off
01
02
03   CUTOM 0004    S-VIDEO               Off
04
05
06   CUTOM 0007    YCbCr1                On
07   CUTOM 0008    RGB2
On
08
09   CUTOM 0010    VIDEO                 Off
Delete: Select Start Line
```

   2) Press the remote control ▲/▼ button and select the ending number of the deletion, then press the ENTER button.

      When only one digit is to be deleted, just press the ENTER button.

      A verification display to the effect of Delete? will appear. Press the remote control ▲/▼ button and select Yes/No, then press the ENTER button.

This ends the deletion procedure.

To turn off the display, press the MENU button. The display will return to the main menu. A further press of the MENU button will turn off the display.

```
User Memory
P01/10
No   Name          Source    Slot        Lock
00   CUTOM 0001    RGB1                  Off
01
02
03   CUTOM 0004    S-VIDEO               Off
04
05
06   CUTOM 0007    YCbCr1                On
07   CUTOM 0008    RGB2                  On
08
09   CUTOM 0010    VIDEO                 Off
Delete: Select End Line
```

```
User Memory
P01/10
No   Name          Source    Slot        Lock
00
01
02
03
04
05
06   CUTOM 0007    YCbCr1                On
07   CUTOM 0008    RGB2                  On
08
09   CUTOM 0010    VIDEO                 Off
```

```
Delete?
NO. 00-03
    Yes
    No
```

Changing the Default Values of the Screen Data (Change Default)

The projector is equipped with default area that stores screen data having a one- to - one correspondence with the standard memory. At the start, this memory contains the screen data of the standard memory.

When the display area of the personal computer that is being projected with the standard memory is not normal, the correct screen data can be written to the default area.

1. Projecting Input Signals that Are to Be Default Values

   Input the signal of the computer and adjust the screen to a proper screen.

   This will be the default value of the screen data at this resolution.

2. Displaying the Signal Registration Menu Display

   Select [Memory] → [User Memory] or [Channel Memory] from the main menu, then press the ENTER button.

   The signal registration menu display will appear.

   See "Selecting Memory Display" on Page E-57 for details.

Signal Entry
- Entry Copy
- Entry Move
- Entry Delete
- Change Defalut
- Memory edit
- Load
- Store

3. Changing the Default Values of the Screen Data

   1) Press the remote control ▲/▼ button and select [Change Default], then press the ENTER button.

      The default change verification display will appear.

   2) Press the remote control ▲/▼ button and select the Yes/No, then press the ENTER button.

Normalize?
- Change Defalut
- Yes
- No

The defaults have now been changed.

To turn off the display, press the MENU button twice. The display will return to the main menu. A further press of the MENU button will turn off the display.

To initialize the default area (or to become the same as the standard memory)

1) Press the NORMAL button.

2) Press the remote control ▲/▼ button and select the Yes/No, press the ENTER button.

The default area has now been returned to its original factory settings.

Editing the Memory Contents (Source Edit)

This function edits the registration contents of the user memory and the channel memory.

Skip and Source lock settings are made with Source Edit.

Note: *The changes you make to the memory contents will take effect at the next time you use the memory.*

Preparations Prior to Editing and Closing the Editing

1) Select the Memory Number to Be Edited

Select [Memory] → [User Memory] or [Channel Memory] from the main menu.

User Memory
P01/10

No	Name	Source	Slot	Lock
00	CUTOM 0001	RGB1		Off
01				

Press the cursor ▲/▼ button and select the memory number that is to be edited, then press the ENTER button.

The signal registration menu display will appear.

Signal Entry
- Entry Copy
- Entry Move
- Entry Delete
- Change Defalut
- Memory edit
- Load
- Store

2) Display the Editing Menu

Press the cursor ▲/▼ button and select [Source Edit], then press the ENTER button.

Display the edit menu.

Advance to the desired item.

Memory edit
- Name
- Slot
- Image Mode
- Skip
- Source Lock
- Sync Termination

CUSTOM0001

3) Turn Off the On-screen Menu Display

To turn off the display, press the MENU button 3 times. The display will return to the main menu.

Press the button once more to turn off the display.

* Changing the Signal Name (Name)

1) Select [Source Edit] → [Name], then press the ENTER button.

The name entry display will appear.

Memory edit
- Name
- Slot
- Image Mode
- Skip
- Source Lock
- Sync Termination

CUSTOM0001

2) Change the Name

Use the remote control cursor ◀ (–)/ ▶ (+) button to align the cursor with the character that is to be changed, then use the remote control number buttons to select the character.

(To cancel, press the MENU button.)

Press the ENTER button when the change has been completed.

The display will return to the editing menu.

Name Input
CUSTOM0001

Signal Name Entry Method

Select [Source Edit] → [Name], then press the ENTER button to change to the signal name entry display.

Here, the character entry and deletion methods will be described.

A maximum of 10 characters can be entered for the signal name.

Use the remote control number buttons and CTL button to enter the letters.

Example: Enter XGA

1) Enter X. (X is on the 8 button.)

   Each press of the 8 button moves the selection through the sequence of V→W→X→8 which repeats. Select X. To enter lower case and other characters, hold down the CTL button and select the characters.

2) Use the cursor ▲/▼ button to move the cursor to the next position.

   Enter G and A using the same method as in Step 1).

* If a mistake is made, use the cursor ▲/▼ button to align the cursor with the error, select the character, and correct it. To delete a character, press the CLEAR button.

3) Press the ENTER button to set.

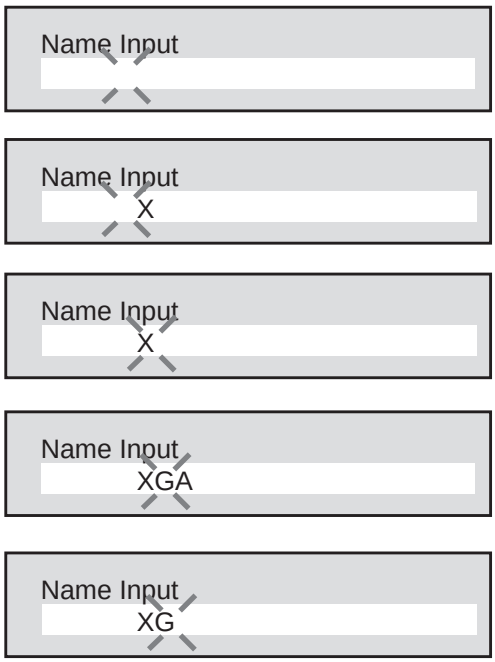

Correrspondence Table for Number Buttons and Letters

Number Buttons	Press Directly	Used with CTL
1	ABC1	a b c !
2	DEF2	d e f ”
3	GHI3	g h i #
4	JKL4	j k l $
5	MNO5	m n o %
6	PQR6	p q r &
7	STU7	s t u ’
8	VWX8	v w x (
9	YZ?9	y z /)
0	* , . 0	

Changing the Slot Number of the Switcher (Slot)

The slot number can be changed with user memory when the source setting is RGB 1 / YCbCr 1 or RGB 2 / YCbCr 2.

1) Select [Source Edit] → [Slot], then press the ENTER button.

   The switcher control display will appear.

```
Memory edit
   Name
   Slot
   Image Mode
   Skip
   Source Lock
   Sync Termination
```

2) Change the Switcher Control Condition

   Press the cursor ▲/▼ button and select the slot number, then press the ENTER button.

   The display will change to the slot master display.

   When [Standalone] is selected, the display returns to the editing menu.

```
Switcher Control
   Standalone
   SW 1 Level
   SW 2 Level
```

3) Changing the Slot

   Press the cursor ▲/▼ button and select the slot number, then press the ENTER button.

   The display will change to the slot slave display.

   When [SW 1 Level] (one unit) is selected, the display will return to the editing menu.

```
Slot    Master
   Slot-01
   Slot-02
```

```
Slot    Slave
   Slot-01
   Slot-02
```

Press the cursor ▲/▼ button and select the slot slave number, then press the ENTER button.

The display will return to the editing menu.

Changing the Image Mode (Image)

Select [Source Edit] → [Image], then press the ENTER button.

The image mode display will appear. See "Selecting the Image Mode" on Page E-46.

Setting the Skip (Skip)

When the input signal is switched, the unit automatically performs a memory search.

When a list number that you wish to skip has been set, the unit will skip over it.

1) Select [Source Edit] → [Skip], then press the ENTER button.

   The skip display will appear.

```
Memory edit
   Name
   Slot
   Image Mode
   Skip
   Source Lock
   Sync Termination
```

2) Setting the Skip

   Press the cursor ▲/▼ button and select On/Off.

   On .... The setting will be beyond the object of the search. The line is marked with an asterisk (*).

   Off .... The setting will be the object of the search.

(To cancel, press the MENU button.)

Press the ENTER button.

The display will return to the edit menu.

```
Skip
   On
   Off
```

Setting Auto Search Forced Lock (Source Lock)

When the input signal is switched, the unit automatically performs a memory search.

This setting mandatorily invalidates auto search.

1) Select [Source Edit] → [Source Lock], then press the ENTER button.

   The source lock display will appear.

Memory edit
- Name
- Slot
- Image Mode
- Skip
- Source Lock
- Sync Termination

2) Setting the Source Lock

   Press the cursor ▲/▼ button and select On/Off.

   On .... Auto search will be invalidated.

   (Auto search will not be performed even when the input signal changes.)

   Off .... Auto search will be effective. (Normal)

Source Lock
- On
- Off

(To cancel, press the MENU button.)

Press the ENTER button.

The display will return to the edit menu.

Sync Signal Termination Setting (Sync Termination)

This sets the termination resistance for the input sync of the RGB1/YCbCr1 Input connector.

Select [Source Edit]→ [Sync], then press the ENTER button.

The sync termination display appears. See "Sync Signal Termination Setting" on Page E-39.

Viewing the Details of the Input Signal (Display Menu)

This function is convenient for checking the condition of the signal that is currently being input.

Select [Display Menu] from the main menu and press the ENTER button.
The display will change to the Display menu.

Press the remote control ▲/▼ button to select [Input Signal], then press the ENTER button.
The details of the input signal will be displayed.

To turn off the display, press the MENU button. The display will return to the previous menu.
Press the MENU button from the main display to turn off the display.

Memory number .... This is the list number or channel number of the user registration, channel registration, the standard memory, and the default are:
S : Standard memory, U : Default area, U : User memory, C : Channel memory

Horizontal frequency ..... This is the horizontal scanning frequency.

Vertical frequency ..... This is the vertical scanning frequency.

Pixel Clock ..... This is the clock frequency.

Sync Polarity ..... This is the polarity of the horizontal sync signal and the vertical sync signal.

Default Area ..... This is the location number where the default data is stored.

Resolution ..... This is the horizontal and vertical resolution for the currently displayed signal.

Scan Mode ..... This is the currently selected scan mode.

Main Menu
- Picture
- Alignment
- Memory
- Switcher
- Display Menu
- Settings Menu
- Source

Display
- Lamp Usage
- Input Signal

Input Signal
Memory No. U--00
Frequency fH 37.5kHz
Frequency fV 75Hz
Pixel Clock 30.0MHz
Sync Polarity HD(-) VD(-)
Default Area 06
Resolution 640×480
Scan Mode Non Interlace

• Detailed list of memory

This function displays detailed information about the registered memory.

1. Call up the memory display.

   Select [Memory]→[User Memory] or [Channel Memory] from the main menu.

2. Select the memory number you wish to view.

   Press the remote control ▲/▼ button and select the list number or channel number.

3. Display the contents of the memory.

   Press and hold the remote control CTL button, then press the DISPLAY button.

To turn off the diplay, press the MENU button.

Memory No.	U-02	
Frequency	fH 80.3 kHz	
Frequency	fV 75 Hz	
Pixel Clock	135.6 MHz	
Sync Polarity	HD (+) VD (-)	
Default Area	02	
Scan Mode	Non Interlace	Currently selected Scan mode
Interpolation	PC Mode	Currently selected Interpolation mode
Sync Termination	Hi-Z	Currently selected Sync termination mode
Image Mode	Normal	Currently selected Image mode
Image Filter	Off	Currently selected Image filter mode

CONTROLLING THE SWITCHER (Switcher)

Before Using the Switcher Control Functions...

Connecting a switcher (ISS-6020) to the projector permits a number of external pieces of equipment to be connected. (A maximum of 100 channels can be controlled with the projector.)

To integrate and manage the picture adjustments of these pieces of equipment, the adjustment values are registered to channel memory and any piece of equipment can be reproduced with the same picture conditions.

To use the switcher functions, connect the projector with the switcher and also connect a control cable between the REMOTE 1 connectors of the units. See "Selecting the Switcher Control Method [Switcher Control]" on page E-38.

The switcher is a unit that switches the input equipment when a number of different video devices or computers are connected.

When the REMOTE 1 connector is used, input selection and adjustment are permitted by the projector. See "Connections with ISS-6020" on Page E-28.

After the connections have been made, perform the [Switcher Control] in conjunction with the switcher and the system. See "Selecting the Switcher Control Method" on Page E-38.

These steps now permit switcher input selection, picture adjustment, and volume adjustment from the projector.

Make adjustments with the signals being input from the external equipment that is connected to the switcher.

When there is no signal, adjustment and setting of [Volume] and [Audio Select] are permitted.

Default Settings of the Switcher

Picture settings at the time of shipping from the factory are as described below.

Please adjust and set required items.

Press the MENU button to display [Main Menu], select [Switcher] with the cursor button, then press the ENTER button to display the switcher menu.

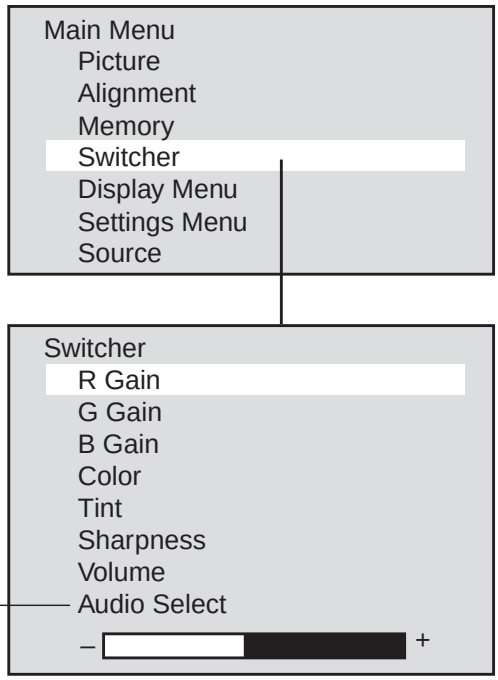

Setting at the time of shipping from the factory is 'Projector".

Switcher Picture Adjustment

Select [Switcher] from the main menu.

Press the cursor ▲/▼ button and select the adjustment item.

When the item to be adjusted is selected, the adjustment bar of the selected item is displayed at the bottom edge of the display.

Adjust with the cursor ◀ (–)/ ▶ (+) button.

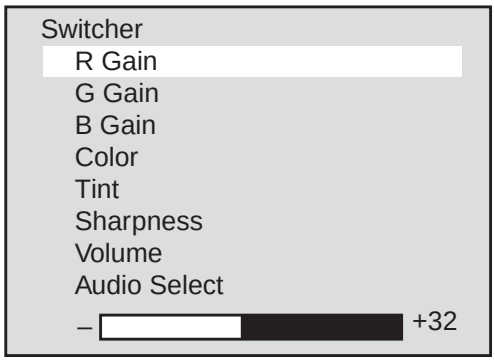

Returning the Picture Adjustment to the Standard Settings

This function returns the adjustments of the R, G, and B gains, the color, tint, and sharpness to the standard settings.

Example: Return the R Gain to the Standard Setting.

Press the cursor ▲/▼ button and select [R Gain].

When the item to be adjusted is selected, the adjustment bar of the selected item is displayed at the bottom edge of the display.

Press the NORMAL button. A verification display "Normalize ?" will appear. Press the cursor ▲/▼ button, select Yes/No, then press the ENTER button.

The setting will return to the factory setting value of the switcher.

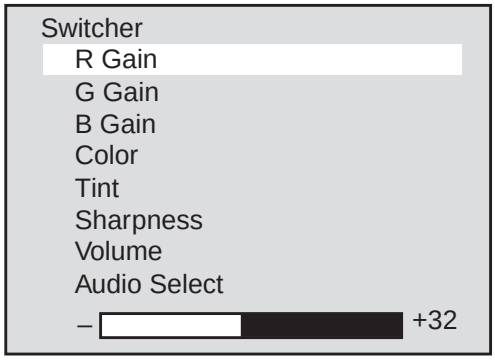

Audio Control of the Switcher

This is the audio adjustment of the switcher AUDIO OUTPUT.

Setting the Volume (Volume)

This function sets the volume adjustment data that corresponds to the slot.

Select [Switcher] from the main menu.

Press the cursor ▲/▼ button and select [Volume].

When the item to be adjusted is selected, the adjustment bar of the selected item is displayed at the bottom edge of the display.

Adjust with the cursor ◀ (–)/ ▶ (+) button.

The adjustment range is from 0 to 63.

(–) Direction ..... The volume decreases.

(+) Direction ..... The volume increases.

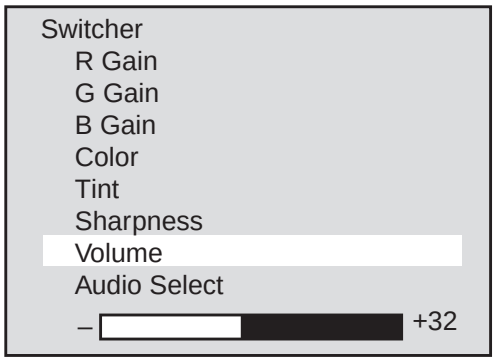

Adjusting Volume of Switcher with Remote Control (Audio Select)

This is a setting that adjusts the volume of the switcher with the VOLUME button on the remote control.

Select [Switcher] → [Audio Select] of the main menu.

When the item to be adjusted is selected, the setting condition is displayed at the bottom edge of the display.

A press of the ENTER button changes the display to the audio control display.

Press the cursor ▲/▼ button and select Switcher / Remote control.

Switcher ..... Permits volume adjustment of the switcher using the VOLUME button of the remote control.

Projector ..... Permits volume adjustment of the projector using the VOLUME button of the remote control.

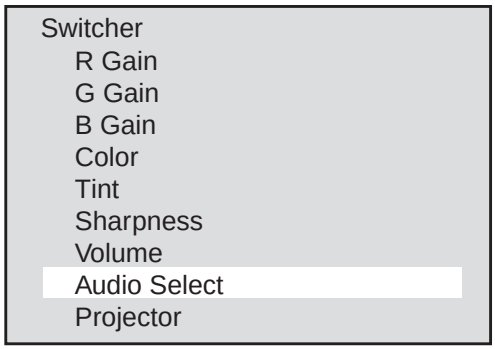

* The Switcher menu displays only when the switcher is connected with the GT2000/GT2000R and Switcher Control mode is set to either SW 1 Level or SW 2 Level.

Note: *When the switcher is not connected, "Switcher" cannot be selected.*

5 MAINTENANCE

This section describes the simple maintenance procedures you should follow to replace the lamp, clean or replace the filter, and replace the batteries in the remote control.

Replacing The Lamp

After your lamp has been operating for 2000 hours or longer, the red "status" light in the cabinet will go on and the lamp icon will appear on the above right of the screen whenever the projector is turned on. The lamp icon remains on after 2100 hours of service. Even though the lamp may still be working, replace it at 2000 hours to maintain optimal projector performance.

⚠ CAUTION

- DO NOT TOUCH THE LAMP immediately after it has been used. It will be extremely hot. Allow at least one hour for the lamp to cool before handling.
- DO NOT REMOVE ANY SCREWS except the lamp cover set screw and two lamp case screws. You could receive an electric shock.
- Do not touch the front surface portion of the replacement lamp body in which glass is used.
  Touching the glass portion or bulb tip may result in a drop of the brightness or shortened bulb life.
- Turn off the main power to the projector and disconnect the power cord. Allow at least one hour for the lamp to cool.
- If you continue to use the lamp after 2000 hours of use, the lamp bulb may shatter, and pieces of glass may be scattered in the lamp case. Do not touch them as the pieces of glass may cause injury. If this happens, contact your NEC dealer for lamp replacement.

To replace the lamp:

1. Loosen the single captive screw that secures the lamp housing cover and remove the cover.
2. Loosen the two captive screws securing the lamp case.
3. Remove the lamp by pulling out the complete assembly.
4. Install a new lamp case assembly and secure it in place with the two captive screws.

⚠ CAUTION: Do not use a lamp other than the NEC replacement lamp. Order this from your NEC dealer using your projector's model number.

5. Reattach the lamp housing cover and tighten the single captive screw.
6. After you install a new lamp, select [Display] from the main menu, and press the ENTER button. Then press the remote ▲/▼ button to select [Lamp Usage], then press the NORMAL button to display the Reset menu. Press the remote ▲/▼ button to select [Yes] and press the ENTER button.
   This resets the lamp clock back to zero.

Note: *When you replace the lamp, it is also wise to replace the filter. The filter comes in the same package with your replacement lamp.*

To check and reset the lamp usage time

To view the lamp usage time:

1. Select [Display Menu] from the main menu and press the ENTER button.
2. Press the remote ▲/▼ button to select [Lamp Usage].
   The usage time will be displayed at the bottom right of the menu.

Note: *After your lamp has been operating for 2000, a warning icon will appear.*

To reset the lamp clock back to zero:

1. Select [Display] from the main menu, and press the ENTER button.
2. Press the remote ▲/▼ button to select [Lamp Usage], then press the NORMAL button.
3. Press the remote ▲/▼ button to select [Yes] and press the ENTER button.
   This resets the lamp clock back to zero. Also the STATUS indicator goes off.

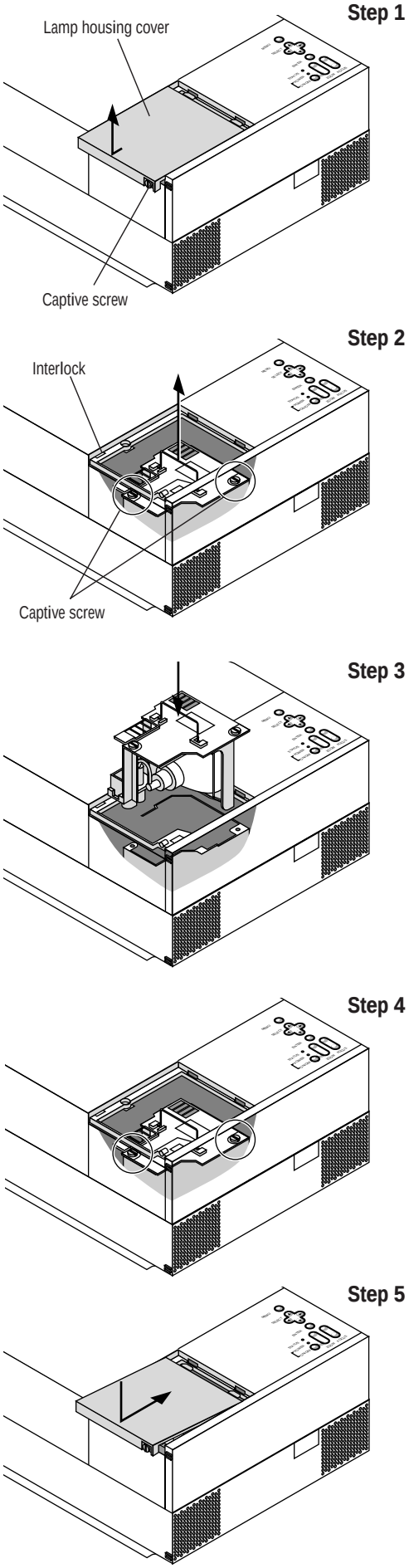

Cleaning Or Replacing The Filter

The air-filter sponge keeps the inside of the MultiSync GT2000/ GT2000R LCD Projector free from dust or dirt and should be cleaned after every 100 hours of operation (more often in dusty conditions). If the filter is dirty or clogged, your projector may overheat.

NOTE: *Clean your filter after every 100 hours of operation.*

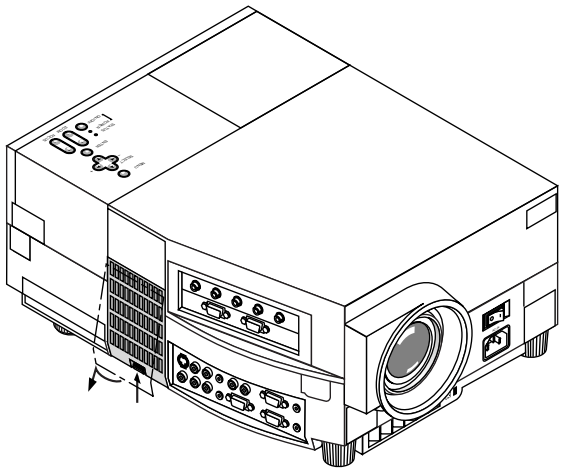

⚠ CAUTION

- Turn off the main power and unplug the projector before replacing the filter.
- Only clean the outside of the filter cover with a vacuum cleaner.
- Do not attempt to operate the projector without a filter cover.
- Your LCD projector will not operate unless the filter cover is installed correctly.

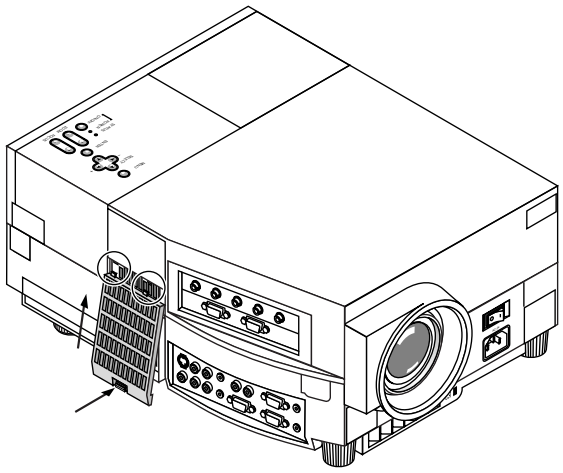

To clean the air-filter:

Vacuum the filter through the filter cover.

To replace the air-filter:

1. Remove the filter cover by pushing up on the catch of the cover until you feel it detach.
2. Reinstall the new filter cover.

NOTE: *Do not detach the sponge from the filter cover. Do not wash the filter cover with soap and water. Soap and water will damage the filter membrane.*
Before replacing the filter cover, remove dust and dirt from the projector cabinet. Keep out dust and dirt during filter replacement.

Remote Control Battery Installation

Installing the Remote Control Batteries

When it comes time to replace the batteries, two "AAA" type will be required.

1. Press and open the cover.
2. Align the batteries according to the (+) and (-) indications inside the case.
3. Replace the cover.

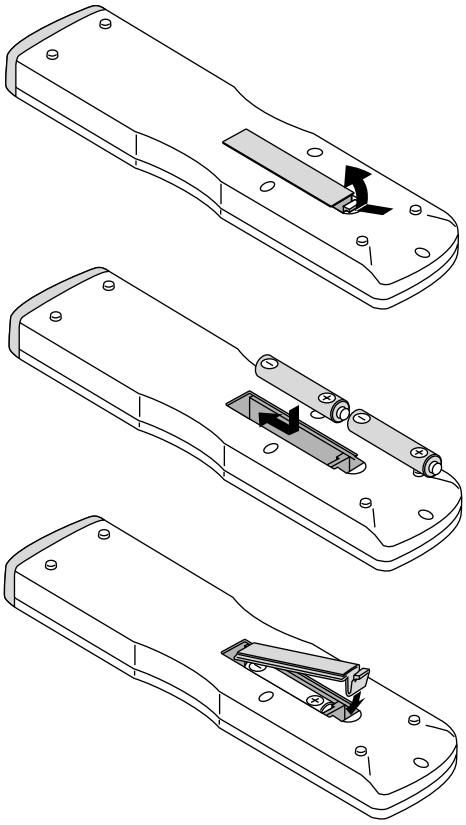

Cette section décrit les procédures simples d'entretien que vous aurez à suivre pour remplacer la lampe, nettoyer ou remplacer le filtre et remplacer les piles de la télécommande.

Remplacement de la lampe

Lorsque la lampe a été utilisée pendant 2000 heures ou plus, le voyant "Status" (état) du coffret s'allume. Même si la lampe peut encore fonctionner, remplacez-la au bout de 2000 heures pour conserver une performance optimale de votre projecteur.

⚠ PRECAUTION

- NE TOUCHEZ PAS A LA LAMPE juste après qu'elle a été utilisée. Elle est très chaude. Laissez-la refoidir pendant au moins une heure avant de la manipuler..
- NE RETIREZ AUCUNE VIS mis à part la vis qui fixe le couvercle de lampe et les deux vis du compartiment de lampe. Vous risquez de recevoir une décharge éléctrique.
- Mettez le projecteur hors circuit et débranchez le cordon d'alimentation. Laissez refroidir la lampe pendant au moins une heure.
- Le projecteur s'éteindra et restera en attente après 2100 heures d'utilisation. Dans ce cas, remplacez la lampe. Si vous continuez d'utiliser la lampe après 2000 heures d'utilisation, l'ampoule peut se briser et des brisures de verre peuvent être éparpillées dans le compartiment de la lampe. Ne les touchez pas car elles peuvent vous blesser. Dans ce cas, contactez votre revendeur NEC afin de procéder au remplacement de la lampe.

Pour remplacer la lampe:

1. Retirez l'unique vis qui fixe le couvercle de lampe et retirez le couvercle
2. Retirez les deux vis qui fixent le compartiment de lampe. (Afin de prévenir contre un risque de décharge électrique, il y a un enclenchement sur ce compartiment. Ne tentez pas de détourner cet enclenchement.)
3. Retirez la lampe en tirant tout l'assemblage.
4. Installez un nouvel assemblage de compartiment lampe et fixez-le avec les deux vis.

⚠ **PRECAUTION:** N'utilisez pas d'autres lampes qu'une lampe de rechange NEC
Commandez-la auprès de votre vendeur NEC en donnant le numéro de modèle du projecteur.

5. Fixez de nouveau le couvercle de lampe et replacez la vis unique.
6. Une fois la nouvelle lampe installée.

REMARQUE: *Réinitialiser la durée totale d'usage de lampe. (Se rperorter à la page E-73.)*

REMARQUE: *Lorsque vous remplacez la lampe, Lorsque vous remplacez la lampe, il est recommandé de changer également le filtre. Le filtre se trouve dans le même emballage que la lampe de rechange .*

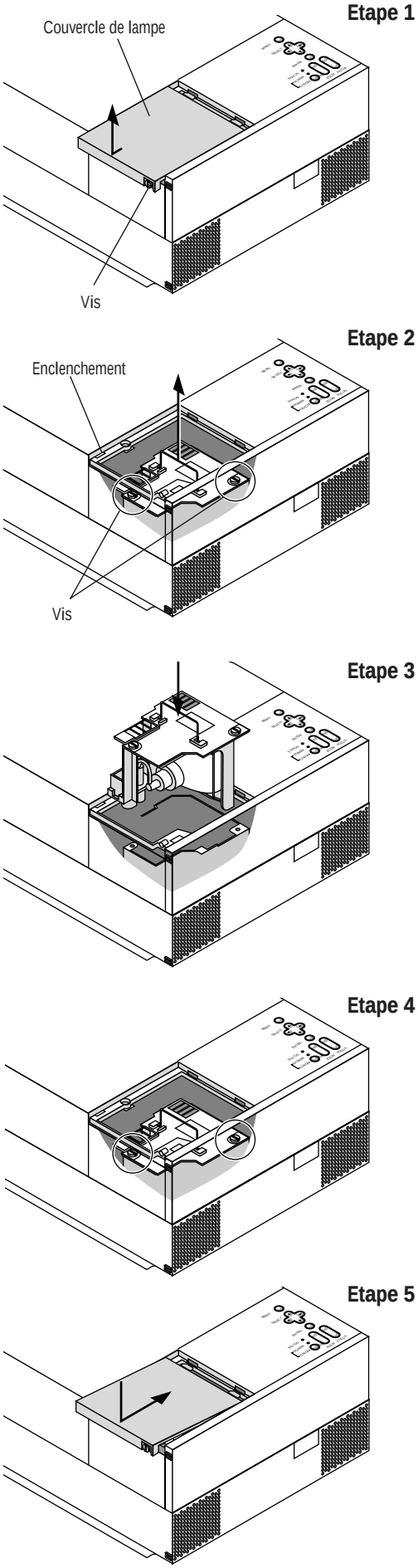

Nettoyage ou remplacement du filtre

Le coussin éponge du filtre à air maintient l'intérieur du projecteur à affichage à cristaux liquides MultiSync GT2000 / GT2000R à l'abri de la poussière ou de la saleté et doit être nettoyé toutes les 100 heures d'utilisation (plus souvent dans les endroits poussiéreux). Si le filtre est sale ou bouché, le projecteur risque de surchauffer.

REMARQUE: *Nettoyez le filtre toutes les 100 heures d'utilisation.*

⚠ PRECAUTION

- Coupez l'alimentation et débranchez le projecteur avant de remplacer le filtre.
- Nettoyez uniquement le couvercle extérieur du filtre avec un aspirateur.
- N'essayez pas de faire fonctionner le projecteur sans filtre.
- Votre projecteur à affichage à cristaux liquides ne fonctionnera pas tant que le filtre ne sera pas installé correctement.

Pour nettoyer le filtre à air:

Aspirez le filtre à travers le couvercle de filtre.

Pour remplacer le filtre à air:

1. Retirez le panneau du filtre en poussant vers le haut sur le cliquet du couvercle à l'aide d'un tournevis à tête plate jusqu'à ce que vous sentiez qu'il se détache.
2. Réinstallez le panneau du filtre.

REMARQUE: *Ne détachez pas le coussin éponge du couvercle de filtre. Ne lavez pas le filtre au savon et à l'eau. Le savon et l'eau endommageront la membrane du filtre.*
Avant de remplacer le filtre à air, dépoussiérez et nettoyez le coffret du projecteur. Maintenez propre pendant le remplacement du filtre.

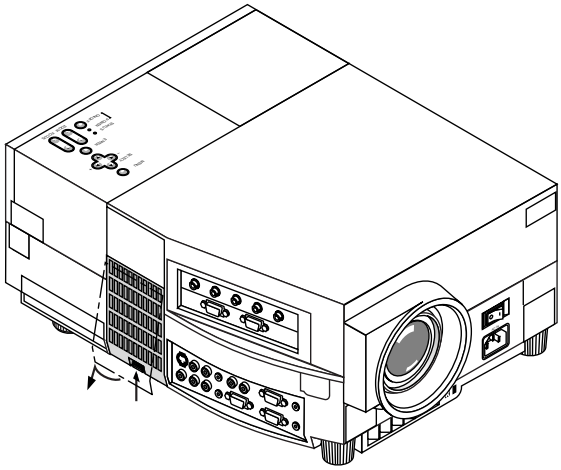

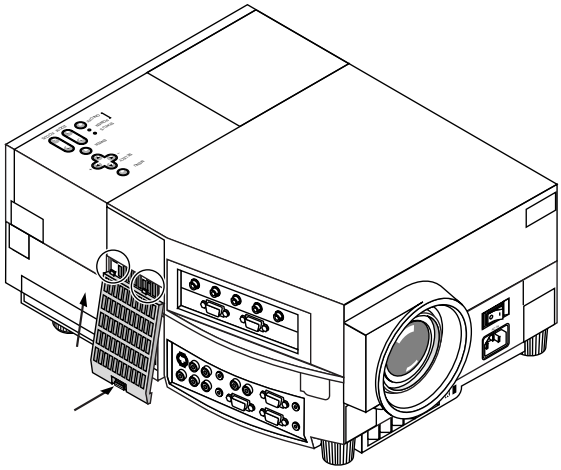

Installation des piles de la télécommande

1. Appuyez fermement et retirez le couvercle des piles en le faisant glisser.
2. Retirez les deux piles usagées et installez de nouvelles piles (AA). Assurez-vous de respecter la polarité (+/–) des piles.
3. Remettez le couvercle des piles en le faisant glisser, jusqu'à ce qu'il s'emboîte.

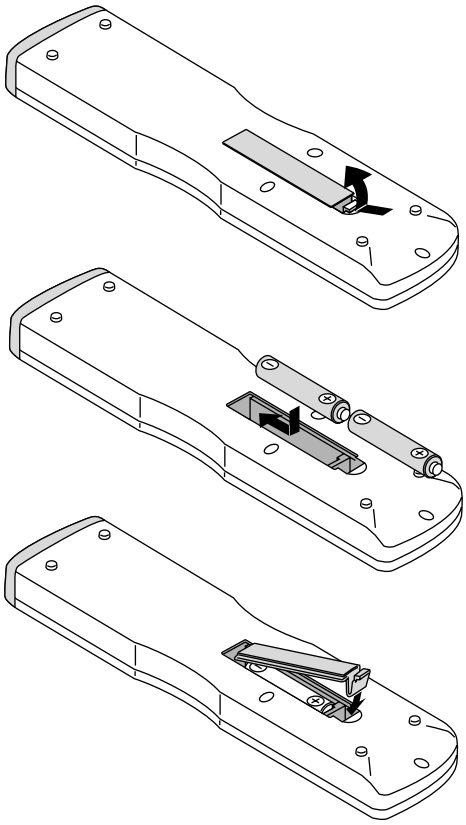

6 TROUBLESHOOTING

This section helps you resolve problems you may encounter while setting up or using your MultiSync GT2000/GT2000R LCD Projector.

Status Light Messages

Condition		Status
Red	OFF	■ Normal
	On continually	■ The projector lamp has exceeded 2000 hours of operation and should be replaced.
	Blinking very rapidly (On and off in a cycle of 1 sec.)	■ Either the lamp cover or filter cover is not fastened properly. Check each and reattach them if necessary.
	Blinking slowly (On and off in a cycle of 8 sec.)	■ The cooling fan has stopped. Contact your NEC dealer for service.
	Blinking very slowly (On and off in a cycle of 12 sec.)	■ The lamp is not turned on. • The projector was turned off and back on too quickly. Turn off the projector, wait one minute, then turn the projector back on. Or the lamp is burnt out.
Green	On continually	■ Normal (The projector is used with the ISS-6020 switcher in bundled operation.)
	Blinking very slowly (On and off in a cycle of 12 sec)	■ The projector is not connected with the ISS-6020.

Common Problems & Solutions

Problem	Check These Items
Does not turn on	• Check that the cord is plugged in and that the power switch on the front panel is on. • Ensure that the filter cover is installed correctly. • Check to see if the projector has overheated or the lamp usage exceeds 2100 hours. If there is insufficient ventilation around the projector or if the room where you're presenting is particularly warm, move the projector to a cooler location. Check the filter and clean it if necessary.
No picture	• Select your source (Video, S-Video, RGB1, or RGB2). • Ensure your cables are connected properly. • Adjust the brightness and contrast. • Remove the lens cap. • Check if RGB/YCbCr mode is set to YCbCr when a DVD player with component output is connected. (See page E-48.) • Check if the Source Lock is set to Off. If not, select [Memory Edit] ->[Source Lock] and set to Off. If the Source Lock is set to ON, search is not performed when you switch to another input. (See page E-68.) • Adjust alignment correctly when RGB input is selected. (See page E-49.)
Image isn't square to the screen	• Reposition the projector to improve its angle to the screen. • Correct the keystone distortion. (See page E-40.) • Set Sync position to "0" or "1" to correct the wave pattern. (See page E-55.)
Picture is blurred	• Adjust the focus. • Reposition the projector to improve its angle to the screen. • Ensure that the distance between the projector and screen is within the adjustment range of the lens. • Condensation may form on the lens when the cold projector is brought into a warm place and is turned on. Should this happen, let the projector stand until there is no condensation on the lens.
Image is scrolling vertically, horizontally or both	• Select the source you want to input. • Make sure the recalled user memory or channel memory supports the current input signal. (See page E-56.)
Volume button does not work	• Check if Audio Select is set to Switcher when the switcher is connected. (See page E-72.)
Remote control does not work	• Install new batteries. (See page E-74.) • Make sure there are no obstacles between you and the projector. • Stand within 7m of the projector. • Check if the projector ID is the same as the remote ID. Or check if the remote ID is set to "00". (See page E-43.)
Status indicator is lit or blinking	See the Status Light message chart on page E-77.
Cross color in RGB mode	Adjust the image with the Picture Adjustment and Fine Picture Adjustment.

7 SPECIFICATIONS

This section provides technical information about the MultiSync GT2000/GT2000R LCD Projector's performance.

Model Number	GT2000 / GT2000R

Optical

LCD Panel	1.3", p-Si TFT active-matrix, 1366×1024 dots
Lens	GT2000 : F 2.5 f = 52 – 68 mm (Power zoom, power focus) GT2000R: F2.5 f = 30 mm (Fixed focus)
Lamp	New short arc high pressure lamp 150 W
Image Size	GT2000 : 20 – 300 inches (50.8 – 762 cm) diagonal GT2000R : 40 – 200 inches (102 – 508 cm) diagonal
Projection Distance	GT2000 : 1.0 – 12.0 m (3.08 - 39.37 ft) GT2000R : 0.8 – 4.6 m (2.75 - 15.2 ft)

Electrical

Inputs	Video (NTSC / PAL / SECAM / NTSC4.43) RGB (H : 15 – 107 kHz, V : 50 – 105 Hz)
Video Bandwidth	RGB: 150 MHz
Color Reproduction	Full color, 16.7 million colors simultaneously.
Horizontal Resolution	550 TV lines at S-Video : NTSC / PAL 300 TV lines : SECAM / NTSC 4.43 1000 TV lines : Y/Cb/Cr RGB 1366 dots horizontal, 1024 dots vertical
Power Requirement	100 – 120 / 220 – 240 VAC, 50 / 60 Hz
Input Current	5 / 2 A

Mechanical

Dimensions	GT2000 : 29.3 cm (W)×17. 1 cm (H)×40. 5 cm (D) with lens 11. 6” (W)×6. 8” (H)×16. 0” (D) with lens GT2000R : 29.3 cm (W)×17.1 cm (H)×47.8 cm (D) with lens 11. 6” (W)×6. 8” (H)×18. 9” (D) with lens
Net Weight	GT2000 : 8. 0 kg / 17. 7 lbs GT2000R : 10. 0 kg / 22. 1 lbs
Operational Temperatures	LCD projector: 0° to 40°C / 32° to 104° F, 20 – 80% humidity Remote control: 0° to 60°C / 32° to 140° F
Regulations	UL Approved (UL 1950, CSA 950) Meets DOC Canada requirements Meets FCC Class A requirements Meets EMC Directive (EN55022, EN61000-3-2, EN61000-3-3, EN50082-1) Meets Low Voltage Directive (EN60950, TÜV GS Approved)

CE

Cabinet Dimensions

GT2000

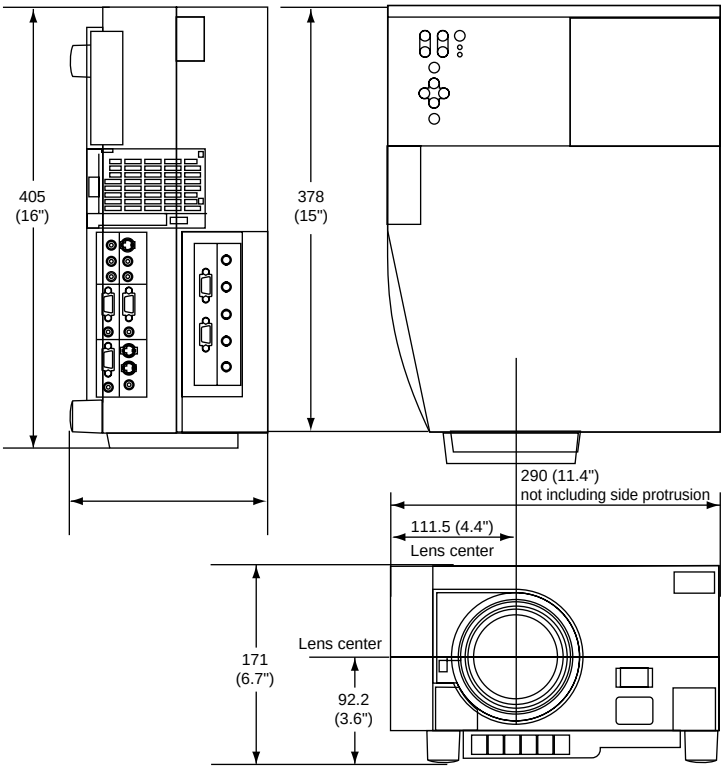

GT2000R

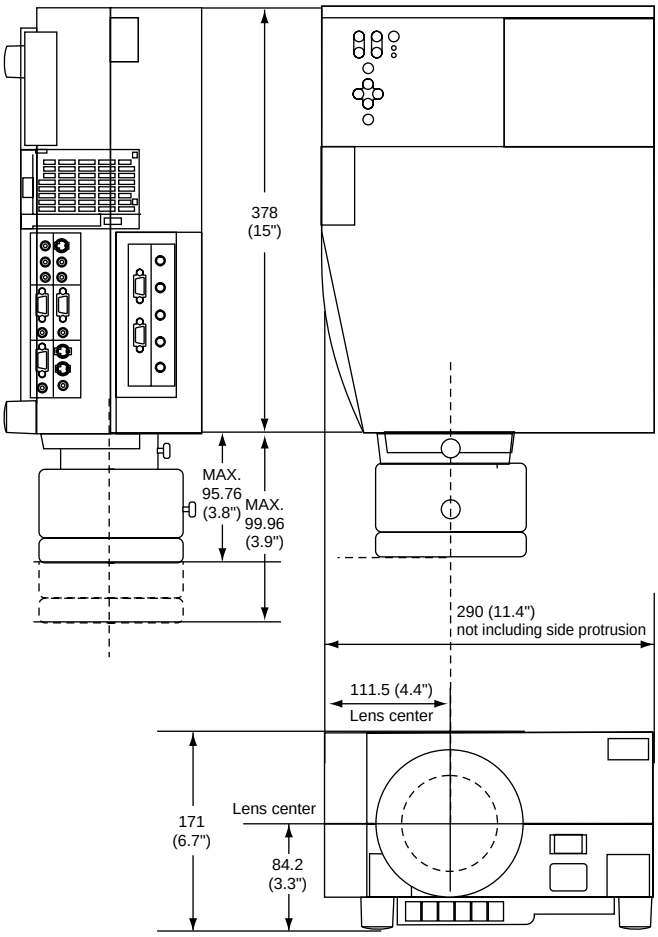

Unit : mm (inch)

D-Sub Pin Assignments

PC 15-Pin mini D-Sub

Pin No.	RGB (Analog)	YCbCr
1	Red	Cr
2	Green or Sync. on Green	Y
3	Blue	Cb
4	GND	
5	GND	
6	Red Return (GND)	Cr (GND)
7	Green Return (GND)	Y (GND)
8	Blue Return (GND)	Cb (GND)
9	No Connection	
10	Sync Return (GND)	
11	GND	
12	Bi-dirctional DATA (SDA)	
13	H. or Composite sync	
14	V. SYNC (VCLK)	
15	Data Clock	

PC 15-Pin mini D-Sub

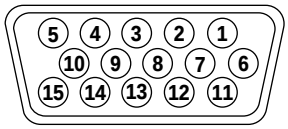

Signal level

Video signal : 0.7 Vp-p (analog)

Sync. signal : TTL level

Displayable Video Signals

The video signals that can be displayed with your LCD projector fall between a horizontal frequency of 15 to 107 kHz, a vertical frequency of 50 to 105 Hz.

Typical workstations, personal computers, and video signals that can be projected are as follows:

Signal	Resolution	Horizontal Frequency	Vertical Frequency
NTSC	337 × 480	15.73	29.9
PAL/SECAM	372 × 574	15.63	25.0
HDTV	1920 × 517	33.75	25.0
	640 × 480	31.5	60.0
	800 × 600	37.9	60.3
	800 × 600	46.9	75.0
	1024 × 768	56.5	70.1
	1024 × 768	60.0	75.0
	1280 × 1024	64.6	59.9
	640 × 480	37.9	72.8
	640 × 480	37.5	75.0
IBM PC or Compatibles	640 × 480	43.3	85.0
	800 × 600	35.2	56.3
	800 × 600	48.1	72.2
	800 × 600	53.7	85.1
	1024 × 768	48.4	60.0
	1024 × 768	58.1	72.0
	1024 × 768	68.7	85.0
	1280 × 1024	80.0	75.0
	1600 × 1200	75.0	60.0
	1600 × 1200	81.3	65.0
	1600 × 1200	87.5	70.0
Apple Macintosh	640 × 480	35.0	66.7
	832 × 624	49.7	74.5
	1024 × 768	60.2	74.9*
	1152 × 870	68.7	75.6*
	1280 × 1024	81.1	76.1*
NEC EWS4800	1280 × 1024	64.6	59.9
	1280 × 1024	75.1	71.0
Sun	1152 × 900	61.8	66.0
	1280 × 1024	74.9	69.9
	1280 × 1024	81.1	76.1
SGI	1024 × 768	49.7	60.4
	1280 × 1024	63.9	60.0
	1152 × 900	71.7	76.1
HP	1280 × 1024	78.1	72.0

* 1600×1200 images are compressed into 1366×1024 with AccuBlend.

PC Control Command Reference

Command Codes

1. Power ON

```
[function]  Switching ON the projector power
[Command]   C0   00   01   00   CKS
[ACK]       C0   00   01   00   CKS
```

2. Power OFF

```
[function]  Switching OFF the projector power
[Command]   C0   00   02   00   CKS
[ACK]       C0   00   02   00   CKS
```

3. Focus

```
[function]  Focus adjustment
[Command]   C0   00   03   01   PARA CKS
[ACK]       C0   00   03   00   CKS
            "PARA=01:+, FF:-"
```

4. Zoom

```
[function]  Zoom adjustment
[Command]   C0   00   04   01   PARA CKS
[ACK]       C0   00   04   00   CKS
            "PARA=01:Wide, FF:Tele"
```

5. Digital Zoom

```
[function]  Digital Magnifying function
[Command]   C0   00   05   01   PARA CKS
[ACK]       C0   00   05   00   CKS
            "PARA=01:+, FF:-, 00:Off"
```

6. Key Cursor

```
[function]  Cursor keys
[Command]   C0   00   06   01   PARA CKS
[ACK]       C0   00   06   00   CKS
            "PARA=00:Up, 01:Down, 02:Right,
            03:Left"
            available at the time of Digital
            Zoom only
```

7. Expand

```
[function]  Digital Enlagement function
[Command]   C0   00   07   01   PARA CKS
[ACK]       C0   00   07   00   CKS
            "PARA=00:Off, 01:On"
```

8. Input Select

```
[function]  Video source selection
[Command]   C0   00   08   01   PARA CKS
[ACK]       C0   00   08   00   CKS
            "PARA=00:RGB1, 01:RGB2, 02:VIDEO,
            03:S-VIDEO"
```

9. Brightness

```
[function]  Brightness adjustment
[Command]   C0   00   09   01   DATA CKS
[ACK]       C0   00   09   00   CKS
            DATA= -31 - +32 (decimal)
```

10. Contrast

```
[function]  Contrast adjustment
[Command]   C0   00   0A   01   DATA CKS
[ACK]       C0   00   0A   00   CKS
            DATA= -31 - +32 (decimal)
```

11. Volume

```
[function]  Volume adjustment
[Command]   C0   00   0B   01   DATA CKS
[ACK]       C0   00   0B   00   CKS
            DATA= 00 - 63 (decimal)
```

12. Color

```
[function]  Color adjustment
[Command]   C0   00   0C   01   DATA CKS
[ACK]       C0   00   0C   00   CKS
            DATA= -31 - +32 (decimal)
```

13. Tint

```
[function]  Tint adjustment
[Command]   C0   00   0D   01   DATA CKS
[ACK]       C0   00   0D   00   CKS
            DATA= -31 - +32 (decimal)
```

14. Sharpness

```
[function]  Sharpness adjustment
[Command]   C0   00   0E   01   DATA CKS
[ACK]       C0   00   0E   00   CKS
            DATA= -31 - +32 (decimal)
```

15. Brightness R/G/B

```
[function]  Brightness adjustment for RGB
[Command]   C0   00   0F   02   RGB DATA CKS
[ACK]       C0   00   0F   00   CKS
            "RGB=00:R, 01:G, 02:B"
            DATA= -31 - +32 (decimal)
```

16. Contrast R/G/B

```
[function]  Contrast adjustment for RGB
[Command]   C0   00   10   02   RGB DATA CKS
[ACK]       C0   00   10   00   CKS
            "RGB=00:R, 01:G, 02:B"
            DATA= -31 - +32 (decimal)
```

17. Image Mode

```
[function]  Image mode selection
[Command]   C0   00   11   01   PARA CKS
[ACK]       C0   00   11   00   CKS
            "PARA=00:Normal, 01:Normal 1,
            02:Normal 2,03:Normal 3, 04:Doc Cam"
```

18. Scan Mode

```
[function]  Scan mode selection
[Command]   C0   00   12   01   PARA CKS
[ACK]       C0   00   12   00   CKS
            "PARA=00:Auto, 01:Non Interlace,
            02:Interlace Video, 03:Interlace
            PC"
```

19. Interpolation

```
[function]  Interpolation selection
[Command]   C0   00   13   01   PARA CKS
[ACK]       C0   00   13   00   CKS
            "PARA=00:PC Mode, 01:Video Mode"
```

20. Picture Normalize

```
[function]  Picture normalization
[Command]   C0   00   14   01   PARA CKS
[ACK]       C0   00   14   00   CKS
            "PARA=00:Brightness&Contrast,
            01:Picture All Data"
```

21. H Position

```
[function]  Horizontal display position ad
            justment
[Command]   C0   00   15   01   PARA CKS
[ACK]       C0   00   15   00   CKS
            "PARA=01:Right, FF:Left"
```

22. V Position

```
[function]  Vertical display position adjust
            ment
[Command]   C0   00   16   01   PARA CKS
[ACK]       C0   00   16   00   CKS
            "PARA=01:Up, FF:Down"
```

23. Picture Adjust

```
[function]  Clock frequency adjustment
[Command]   C0   00   17   01   PARA CKS
[ACK]       C0   00   17   00   CKS
            "PARA=01:+, FF:-"
```

24. Fine Picture

```
[function]  Horizontal phase adjustment
[Command]   C0   00   18   01   PARA CKS
[ACK]       C0   00   18   00   CKS
            "PARA=01:+, FF:-"
```

25. H Amplitude

```
[function]  Horizontal magnifying adjustment
[Command]   C0   00   19   01   PARA CKS
[ACK]       C0   00   19   00   CKS
            "PARA=01:+, FF:-"
```

26. V Amplitude

```
[function]  Vertical magnifying adjustment
[Command]   C0   00   1A   01   PARA CKS
[ACK]       C0   00   1A   00   CKS
            "PARA=01:+, FF:-"
```

27. Image Filter

```
[function]  Image Filter function
[Command]   C0   00   1B   01   PARA CKS
[ACK]       C0   00   1B   00   CKS
            "PARA=00:Off, 01:On"
```

28. V Phase

```
[function]  Vertical phase adjustment
[Command]   C0   00   1C   01   PARA CKS
[ACK]       C0   00   1C   00   CKS
            "PARA=01:+, FF:-"
```

29. Skew Correction

```
[function]  Skew adjustment
[Command]   C0   00   1D   01   PARA CKS
[ACK]       C0   00   1D   00   CKS
            "PARA=01:+, FF:-"
```

30. Sync Position

```
[function]  Sync position adjustment
[Command]   C0   00   1E   01   PARA CKS
[ACK]       C0   00   1E   00   CKS
            "PARA=01:+, FF:–"
```

31. Clamp Timing

```
[function]  Clamp timing selection
[Command]   C0   00   1F   01   PARA CKS
[ACK]       C0   00   1F   00   CKS
            "PARA=01:+, FF:–"
```

32.RGB/YCbCr

```
[function]  RGB/YCbCr selection
[Command]   C0   00   20   01   PARA CKS
[ACK]       C0   00   20   00   CKS
            "PARA=00:RGB, 01:YCbCr"
```

33. Auto Alignment

```
[function]  Automatic adjustment
[Command]   C0   00   21   00   CKS
[ACK]       C0   00   21   00   CKS
```

34. Projector Mute ON/OFF

```
[function]  Projector mute ON/OFF
[Command]   C0   00   22   02   PARA DATA CKS
[ACK]       C0   00   22   00   CKS
            "PARA=00:Picture, 01:Audio"
            "DATA=00:Off, 01:On"
```

35. Memory Store

```
[function]  Memory store
[Command]   C0   00   23   02   MEM NO CKS
[ACK]       C0   00   23   00   CKS
            MEM:type of target storage
            "=00:Channel Memory, 01:User
            Memory"
            NO:memory number for target
            storage=00-99 (decimal)
```

36. Memory Load

```
[function]  Memory load
[Command]   C0   00   24   02   MEM NO CKS
[ACK]       C0   00   24   01   DATA CKS
            MEM: type of memory to load
            "=00:Channel Memory, 01:User
            Memory"
            NO:number for memory to load
            =00 - 99 (decimal)
            "DATA=01:OK, FF:No Data"
```

37. Memory Copy

```
[function]  Memory copy
[Command]   C0 00 25 04 SRCMEM SRCNO DESTMEM DESTNO CKS
[ACK]       C0 00 25 01 DATA CKS
            SRCMEM:type of memory to copy from
            "=00:Channel Memory, 01:User
            Memory"
            SRCNO:number for memory to copy
            from = 00 - 99 (decimal)
            DESTMEM:type of memory to copy to
            "=00:Channel Memory, 01:User
            Memory"
            DESTNO:number for memory to copy
            to = 00 - 99 (decimal)
            "DATA=01:OK, FF:No Data"
```

38. Memory Move

```
[function]  Memory move
[Command]   C0 00 26 04 SRCMEM SRCNO DESTMEM DESTNO CKS
[ACK]       C0 00 26 01 DATA CKS
            SRCMEM:type of memory to copy from
            "=00:Channel Memory, 01:User
            Memory"
            SRCNO:number for memory to copy
            from =00 - 99 (decimal)
            DESTMEM:type of memory to copy to
            "=00:Channel Memory, 01:User
            Memory"
            DESTNO:number for memory to copy
            to =00 - 99 (decimal)
            "DATA=01:OK, FF:No Data"
```

39. Memory Delete

```
[function]  Memory delete
[Command]   C0 00 27 03 MEM STARTNO ENDNO CKS
[ACK]       C0 00 27 00 CKS
            MEM:type of memory to be deleted
            "=00:Channel Memory, 01:User
            Memory"
            STARTNO:number for memory to be
            deleted (Start) =00 - 99 (decimal)
            ENDNO:number for memory to be
            deleted (End) =00 - 99 (decimal)
```

40. Change Default

```
[function]  Changing default area
[Command]   C0   00   28   00   CKS
[ACK]       C0   00   28   00   CKS
```

41. Normalize Default Area

```
[function]  Initializing default area
[Command]   C0   00   29   00   CKS
[ACK]       C0   00   29   00   CKS
```

42. Memory Edit(Name)

```
[function]  Editing memory (name)
[Command]   C0  00  2A  0C  MEM NO NAME1 NAME2 - NAME10 CKS
[ACK]       C0 00 2A 01 DATA CKS
            MEM:type of memory to edit
            "=00:Channel Memory, 01:User
            Memory"
            NO:number for memory to edit
            =00 - 99 (decimal)
            NAME1 - NAME10:Memory Name(ASCII)
            "DATA=01:OK, FF:No Data"
```

43. Memory Edit(Slot)

```
[function]  Editing memory (slot)
[Command]   C0 00 2B 04 NO LEVEL MASTER SLAVE CKS
[ACK]       C0 00 2B 01 DATA CKS
            NO:number for memory to edit
            =00 - 99 (decimal)
            "LEVEL=00:Standalone,
            01:SW 1 Level, 02:SW 2 Level"
            MASTER=00 - 09
            SLAVE=00 - 09
            "DATA=01:OK, FF:No Data"
```

44. Memory Edit(Image Mode)

```
[function]  Editing memory (Image mode)
[Command]   C0   00   2C   03   MEM NO IM CKS
[ACK]       C0   00   2C   01   DATA CKS
            MEM:type of memory to edit
            "=00:Channel Memory, 01:User
            Memory"
            NO:number for memory to edit
            =00 - 99 (decimal)
            "IM=00:Normal, 01:Natural 1,
            02:Natural 2, 03:Natural 3, 04:Doc
            Cam"
            "DATA=01:OK, FF:No Data"
```

45. Memory Edit(Skip)

[function] Editing memory (Skip)
[Command] C0 00 2D 03 MEM NO PARA CKS
[ACK] C0 00 2D 01 DATA CKS
MEM:type of memory to edit
"=00:Channel Memory, 01:User Memory"
NO:number for memory to edit
=00 - 99 (decimal)
"PARA=00:Off, 01:On"
"DATA=01:OK, FF:No Data"

46. Memory Edit(Source Lock)

[function] Editing (Lock)
[Command] C0 00 2E 03 MEM NO PARA CKS
[ACK] C0 00 2E 01 DATA CKS
MEM:type of memory to edit
"=00:Channel Memory, 01:User Memory"
NO:number for memory to edit
=00 - 99 (decimal)
"PARA=00:Off, 01:On"
"DATA=01:OK, FF:No Data"

47. Memory Edit(Sync Termination)

[function] Editing memory (Sync termination)
[Command] C0 00 2F 03 MEM NO PARA CKS
[ACK] C0 00 2F 01 DATA CKS
MEM:type of memory to edit
"=00:Channel Memory, 01:User Memory"
NO:number for memory to edit
=00 - 99 (decimal)
"PARA=00:75ohm, 01:Hi-Z"
"DATA=01:OK, FF:No Data"

48. Memory Information

[function] Information on memory
[Command] C0 00 30 03 MEM NO PARA CKS
[ACK] C0 00 30 0B DATA DATA1 DATA2 ... DATA10 CKS
MEM:type of memory
"=00:Channel Memory, 01:User Memory"
NO:Memory number
=00 - 99 (decimal)
"PARA=00:Name, 01:Slot, 02:Image Mode, 03:Skip, 04:Source Lock"
05:Sync Termination
"DATA=01:OK, FF:No Data"
DATA1 - DATA10:Data

49. Standard Memory Search

[function] Force standard memory research
[Command] C0 00 31 00 CKS
[ACK] C0 00 31 00 CKS

50. Switcher Channel Select

[function] Selecting switcher channel
[Command] C0 00 32 01 CH CKS
[ACK] C0 00 32 00 CKS
CH=0 - 99 (decimal)

51. Switcher Gain

[function] Switcher gain adjustment
[Command] C0 00 33 02 PARA DATA CKS
[ACK] C0 00 33 00 CKS
"PARA=00:R Gain, 01:G Gain, 02:B Gain, 03:Color, 04:Tint"
"05:Sharpness, 06:Volume"
DATA= 00 - 3F

52. Switcher Information

[function] Switcher level adjustment
[Command] C0 00 34 01 PARA CKS
[ACK] C0 00 34 01 DATA CKS
"PARA=00:R Gain, 01:G Gain, 02:B Gain, 03:Color, 04:Tint"
"05:Sharpness, 06:Audio, 07:Switcher Level, 08:Channel No., 09:Audio Select"
DATA:Data

53. Switcher Normalize

[function] Switcher normalization
[Command] C0 00 35 00 CKS
[ACK] C0 00 35 00 CKS

54. Audio Select

[function] Switching Audio Control
[Command] C0 00 36 01 PARA CKS
[ACK] C0 00 36 00 CKS
"PARA=00:Projector, 01:Switcher"

55. Lamp Usage

[function] Readout of lamp usage time
[Command] C0 00 37 00 CKS
[ACK] C0 00 37 03 TIME1 TIME2 MIN CKS
TIME1:Time(Low order)
TIME2:Time(High order)
MIN:Minute

56. Lamp Usage Reset

[function] Resetting of lamp usage time
[Command] C0 00 38 00 CKS
[ACK] C0 00 38 00 CKS

57. Language

[function] On-screen language selection
[Command] C0 00 39 01 PARA CKS
[ACK] C0 00 39 00 CKS
"PARA=00:English, 01:German, 02:French, 03:Italian"
"04:Spanish, 05:Swedish, 06:Japanese"

58. Background

[function] Back ground color selection at time of no signal
[Command] C0 00 3A 01 PARA CKS
[ACK] C0 00 3A 00 CKS
"PARA=00:Blue, 01:Black"

59. Auto Start

[function] Setting of Automatic startup function
[Command] C0 00 3B 01 PARA CKS
[ACK] C0 00 3B 00 CKS
"PARA=00:Off, 01:On"

60. Auto Save

[function] Setting of Auto save
[Command] C0 00 3C 01 PARA CKS
[ACK] C0 00 3C 00 CKS
"PARA=00:Off, 01:On"

61. Onscreen Mute

[function] On-screen mute ON/OFF
[Command] C0 00 3D 01 PARA CKS
[ACK] C0 00 3D 00 CKS
"PARA=00:Off, 01:On"

62. Switcher Control

[function] Changing the number of switcher connected
[Command] C0 00 3E 01 PARA CKS
[ACK] C0 00 3E 00 CKS
"PARA=00:Standalone, 01:SW 1 Level, 02:SW 2 Level"

63. Ext. Control

[function] Enabling/disabling external control
[Command] C0 00 3F 01 PARA CKS
[ACK] C0 00 3F 00 CKS
"PARA=00:Off, 01:On"

64. Projector ID

[function] Setting the projector' s ID number
[Command] C0 00 40 01 PARA CKS
[ACK] C0 00 40 00 CKS
PARA=00-64 (decimal)

65. Sync Termination

[function] Setting of sync termination
[Command] C0 00 41 01 PARA CKS
[ACK] C0 00 41 00 CKS
"PARA=00:75ohm, 01:Hi-Z"

66. Projection

[function] Setting of projector's orientation
[Command] C0 00 42 01 PARA CKS
[ACK] C0 00 42 00 CKS
"PARA=00:Front Floor, 01:Rear Ceiling, 02:Rear Floor, 03:Front Ceiling"

67. Keystone

[function] Keystone correction
[Command] C0 00 43 01 DATA CKS
[ACK] C0 00 43 00 CKS
DATA= -31 - +32

68. Keystone Save

[function] Setting of Keystone save
[Command] C0 00 44 01 PARA CKS
[ACK] C0 00 44 00 CKS
"PARA=00:Off, 01:On"

69. PJ Condition Check

[function] Checking of projector' s status
[Command] C0 00 45 00 CKS
[ACK] C0 00 45 01 DATA CKS
"DATA=00:Standby, 02:PowerOn, 03:Cooling Down, 04:Error Standby"

70. PJ Condition Read

[function] Readout of projector's status
[Command] C0 00 46 01 PARA CKS
[ACK] C0 00 46 01 DATA CKS
"PARA=00:Brightness, 01:Contrast, 02:Volume, 03:Color, 04:Tint"
"05:Sharpness, 06:Image Mode, 07:Brightness R, 08:Brightness G"
"09:Brightness B, 0A:Contrast R, 0B:Contrast G, 0C:Contrast B"
"0D:Scan Mode, 0E:Interpolation, 0F:Image Filter, 10:Sync Position"
"11:Clamp Timing, 12:RGB/YCbCr, 13:Audio Select, 14:Language"
"15:Background, 16:Auto Start, 17:Auto Save, 18:Onscreen Mute"
"19:SW Control, 1A:Ext. Control, 1B:Sync Termination, 1C:Projection"
"1D:Keystone, 1E:Keystone Save, 1F:Input Source, 20:Picture Mute"
"21:Audio Mute, 22:Expand, 23:Source Lock"
DATA:Data

Hexadecimal notation unless otherwise specified.