NEC

iS15-2K

Super High Brightness Digital Cinema Projector
User Manual

104-597A

Important Information

Please read this user manual carefully before using the projector, and keep the manual handy for future reference.

A serial number is located on the side of the projector. Record it here:

Symbols used in this manual

Warnings

ELECTRICAL WARNING: this symbol indicates that there is a danger of electrical shock unless the instructions are closely followed.

WARNING: this symbol indicates that there is a danger of physical injury to yourself and/or damage to the equipment unless the instructions are closely followed.

NOTE: this symbol indicates that there is some important information that you should read.

Trademarks

- IBM is a registered trademark of International Business Machines Corporation.
- Macintosh and PowerBook are registered trademarks of Apple Computer, Inc.
- Other product and company names mentioned in this user's manual may be the trademarks of their respective holders.

Product revision

- Because we continually strive to improve our products, we may change specifications and designs, and add new features without prior notice. Projectors built prior to this revision of the User Manual may therefore not include all the features described.

Manual revision

Date	Description	Revision

Notes

General precautions

Do not open the cabinet. There are no user serviceable parts inside.

Use only the power cable provided.

Ensure that the power outlet includes a Ground connection, as this equipment MUST be earthed.

Take care to prevent small objects such as paper or wire from falling into the projector. If this does happen, switch off immediately, and have the objects removed by authorised service personnel.

Do not expose the projector to rain or moisture, and do not place any liquids on top of the projector.

Unplug before cleaning, and use a damp, not wet, cloth.

Do not touch the power plug with wet hands.

Do not touch the power plug during a thunder storm.

Handle the power cable carefully and avoid sharp bends. Do not use a damaged power cable.

There are no user-serviceable parts inside the lamp module. The whole module should be replaced by your provider.

Do not use the lamp for more than 750 hours, as this may cause serious lamp failure, damage the lamp module and cause extra cost on replacement.

Warranted lamp life is determined by the reading on the Lamp-hours meter on the face of the Lamp module, - NOT the reading available via the Information menus.

Xenon lamps produce high intensity light. Do not look directly at the light coming from the lamp housing, or the lens, or allow items such as magnifying lenses to be placed in the light path. This could result in serious eye damage.

Do not touch the ventilation outlets, as they will become hot in use.

Do not cover the ventilation outlets or inlets.

Do not cover the lens whilst the projector is switched on. This could cause a fire

Always allow the lamp to cool for 5 minutes before switching off the power, moving the projector or changing the lamp. If, as a result of an extreme mains supply variation, the projector goes into Standby mode during normal operation, allow the lamp to cool for at least 15 minutes before moving the projector. Alternatively, switch the projector ON to restart the cooling fan, then switch into Standby mode and wait for 5 minutes.

The projector must be switched OFF before removing the air filter, otherwise dust could be sucked into the projector by the ventilation fan.

Never use strong detergents or solvents such as alcohol or thinners to clean the projector and lens.

Notes

Installation precautions

Connect the LAN cable only to a computer LAN connection. Other similar connectors may have a dangerously high voltage source.

A ferrite-core clamp must be fitted to each SDI cable used, to ensure protection from radio frequency interference.

The projector must be installed only by suitably qualified personnel, in accordance with local building codes.

The projector should be installed as close to the power outlet as possible.

The power connection should be easily accessible, so that it can be disconnected in an emergency.

Ensure that there is at least 30cm (12in) of space between the ventilation outlets and any wall, and 10cm (4in) on all other sides.

Do not install the projector close to anything that might be affected by its operational heat, for instance, polystyrene ceiling tiles, curtains etc.

If the projector must be mounted close to people or heat sensitive equipment, then external ducting will be required to remove the hot exhaust air safely.
For more information about external ducting, see **Fitting the lamp duct box***, in* **section 6. Installation.**

The projector weighs over 100kg (200lbs). Use safe handling techniques when lifting the projector.

Before installation, make sure that the surface that is to support the projector is capable of supporting the combined weight of the projector and lens (see specification for exact weights)**.**

Do not place heavy objects on top of the projector chassis. The projector chasis is NOT capable of withstanding the weight of another projector.

Do not drop or jarr the projector.

Place the projector in a dry area away from sources of dust, moisture, steam, smoke, sunlight or heat.

Each time a new lens is fitted to the projector, or the zoom drive lever is operated, the calibration procedure MUST be carried out. See Using the Menus in Section 4. Controlling the projector.

The zoom drive mechanism should always be set to the engaged position, even when using the non-zoom lens, as it provides an extra level of protection, should the lens release lever fail.

Installation of the lamp duct box should be carried out ONLY by certified service personnel.

Do not tilt the projector more than ±12° from side to side when in use, as this may cause serious lamp failure, damage the lamp module and cause extra cost on replacement. The projector my be tilted forwards and backwards as necessary.

Notes

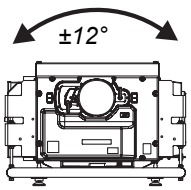

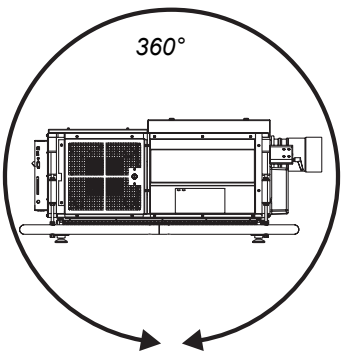

Operation and configuration precautions

The lamp should be changed ONLY by certified service personnel.

Do NOT open the lamp compartment door whilst a film is being shown - safety interlocks on the door will shut down the projector without warning.

Do not make changes to the networking configuration unless you understand what you are doing, or have taken advice from your Network Manager. If you make a mistake, it is possible that you will lose contact with the projector. Always double-check your settings before pressing the APPLY button. Always keep a written note of the original settings, and any changes you have made.

Software update should NOT be carried out except by, or with the supervision of certified service personnel.

WARNING TO CALIFORNIA RESIDENTS

Handling the cables supplied with this product will expose you to lead, a chemical known to the State of California to cause birth defects or other reproductive harm. Wash hands after handling.

Notes

Compliance with international standards

Noise

GSGV Acoustic Noise Information Ordinance

The sound pressure level is less than 70 dB (A) according to ISO 3744 or ISO 7779.

RF Interference

FCC

The Federal Communications Commission does not allow any modifications or changes to the unit EXCEPT those specified in this manual. Failure to comply with this government regulation could void your right to operate this equipment.

This equipment has been tested and found to comply with the limits for a Class A digital device, pursuant with Part 15 of the FCC Rules. These limits are designed to provide reasonable protection against harmful interference when the equipment is operated in a commercial environment. This equipment generates, uses, and can radiate radio frequency energy and, if not installed and used in accordance with the instruction manual, may cause harmful interference to radio communications. Operation of this equipment in a residential area may cause harmful interference, in which case the user will be responsible for correcting any nterference.

Notes

iS15-2K Cinema Projector: User Manual
CONTENTS

1. Introduction 1.1

What's in the box? 1.2
Key features of the projector 1.3
Getting to know the projector 1.4
Chassis – lamp, lens and filter 1.4
Connection panels – input and control 1.5

2. Installation 2.1

Fitting the image to the screen 2.2
Fitting the image to the DMD 2.2
Fitting the projected image to the screen 2.3
Using the anamorphic lens 2.5
Choosing the projection lens 2.6
Method one: using the lens charts 2.6
Lens charts 2.7
Method two: Choosing a lens by calculation 2.15
Useful lens formulae and constants 2.16
Fitting the projection lens 2.17
Calibrating the lens 2.17
Shifting the image 2.18
Fitting the anamorphic lens 2.19
Adjusting the anamorphic lens 2.20
Positioning the screen and projector 2.21
Mounting the projector 2.22
Levelling 2.22
Fitting the lamp duct box 2.23
Connecting the projector 2.24
Typical connections 2.24
Cinema Inputs (SMPTE 292 / HD-SDI) 2.26
DVI-D Inputs 2.27
Control connections 2.28
Power connections 2.30

3. Getting started 3.1

Switching the power on 3.2
Selecting a title 3.3
Displaying a test pattern 3.4
Adjusting the projected image 3.5
To adjust the position of the image on the screen: 3.5
To adjust the size of the image on the screen: 3.5
To adjust the focus of the image on the screen: 3.5
Switching the power off 3.6

4. Controlling the projector 1.1

Introduction 1.2
- Using the control panel 1.2
- Using the remote control 1.3
- Using the menus 1.4

Menu trees 1.8
- Source Select menus 1.9
- Configuration menus 1.10
- Information menus 1.14

5. Maintenance 5.1

Changing the air filter material 5.2

Changing the lamp 5.4
- Lamp-hours meter 5.4

Cleaning the projector and lens 5.5

6. Appendix 6.1

Troubleshooting 6.2

Specifications 6.4
- Part numbers 6.4
- Optical 6.5
- Physical 6.5
- Electrical 6.5
- Control Inputs 6.5
- Cinema Inputs 6.6
- DVI-D Inputs 6.8
- Projection lens data 6.9

Connections 6.10
- Cinema Input (SMPTE 292 / HD-SDI) connection 6.10
- DVI-D Input connection 6.11
- LAN connection 6.12
- Serial control input 6.13
- Remote Control 2 ..... 6.14
- General Purpose Input/Output (GPIO) 6.15

Dimensions 6.16
- without anamorphic lens 6.16

Dimensions 6.17
- with anamorphic lens fitted 6.17

1. Introduction

Contents

What's in the box? 1.2
Key features of the projector 1.3
Getting to know the projector 1.4
Chassis – lamp, lens and filter 1.4
Connection panels – input and control 1.5

What's in the box?

- Make sure your box contains everything listed. If any pieces are missing, contact your dealer.
- You should save the original box and packing materials, in case you ever need to ship your Projector.

Projector
(USA: 102-566 ***or*** *01164028)*
(Rest of World: 102-859 ***or*** *01164029)*

Power cable - USA ***or*** *(LA00098)*

Power cable - Rest of World (LA00097)

2 x DVI-D cable (2 m) (LA00205 ***or*** *73893286)*

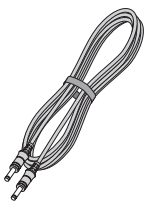

Remote control cable (2m: 7N520019 and 16m: 73499217)

Memory card (7N960191)

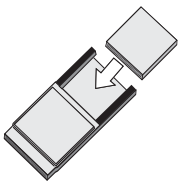

PC adaptor card (79646181)

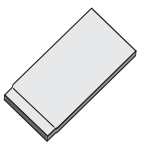

dummy PC adaptor card (24FT8871)

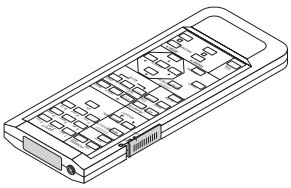

Remote control (7N900122)

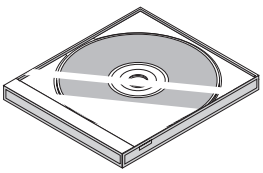

User manual (104-597)

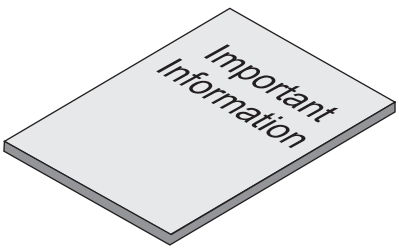

Important Information (104-598)

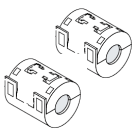

2 x Ferrite-core clamps (61605095)

Notes

Lenses are optional. Order lenses from your provider.

For more detailed information about lenses, see **Using the anamorphic lens** *and* **Choosing the projection lens,** *in* **Section 2. Installation**, *and* **Specification, Lens data** *in* **6. Appendix**.

Key features of the projector

Congratulations on your purchase of an integrated Series iS15-2K Digital Cinema Projector.

This world leading Digital Cinema projector is a third generation development based upon Texas Instruments' 3-chip DLP™ technology; producing incredibly bright, high resolution images, and exceptional contrast with extended colour performance; to meet the very demanding standards of the film community. This large screen movie theatre projector delivers the finest digital images with unprecedented clarity and precision.

The integrated Series iS15-2K harnesses the power of Texas instruments' new 2048x1080 pixel HPO DMD's™, delivering a greyscale and contrast previously unknown in movie theatres. With the security of de-encryption to decode digital movie material, protection is ensured right up to the point it turns into light. A Sub-title engine enables sharp text scaled according to projected image size.

Key Features

- High resolution, large screen projector
- For screens up to 50ft wide (15m)
- Optical performance to meet or exceed the TI DLP Cinema guidelines
- True 2K (2048x1080) resolution
- Film-like colour gamut matching
- 110kg, 4kW single phase
- Compact size, light weight
- Intelligent Lens Mount for precision pixel accurate pre-sets
- LAN and RS232 connection for network operation
- SMPTE 292 serial Digital Input
- DVI-D - Single and Twin for alternative inputs for corporate or live events
- LCD display for local setup and system status
- Shutter
- Electronic non-linear cropping
- Electronic linear resizing

Notes

For inputs other than Cinema, including analog or digital, composite or component, RGB and S-video, and for DVI sources needing features such as scaling, soft-edge blend, cross-fade, and user definable geometric warp:

use in conjunction with the MMS 1000 multi-media switcher.

Getting to know the projector

Chassis – lamp, lens and filter

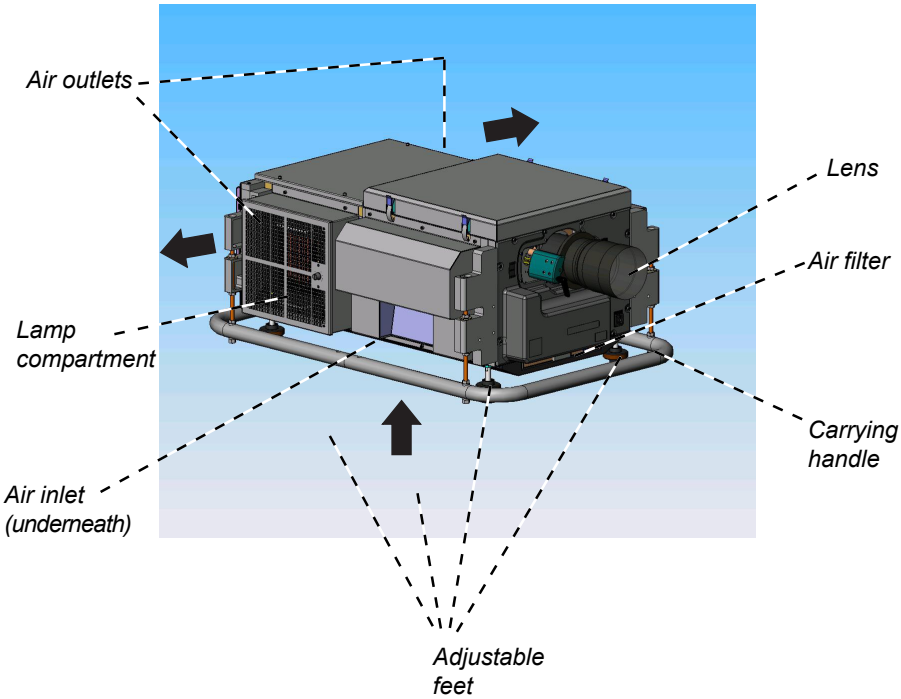

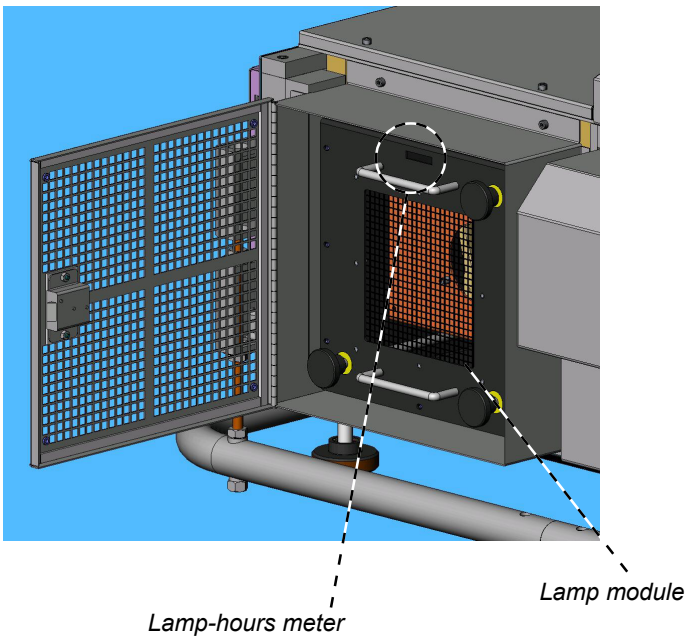

Notes

For information about the LCD lamp-hours meter, and how to change the lamp or the filter, see ***section*** **5. Maintenance**.

For more detailed information about lenses, see **section 2. Installation** *and* **section 6. Specification**.

Do NOT open the lamp compartment door whilst a film is being shown - safety interlocks on the door will shut down the projector without warning.

Warranted lamp life is determined by the reading on the Lamp-hours meter on the face of the Lamp module, shown here - NOT the reading available via the Information menus.

Connection panels – input and control

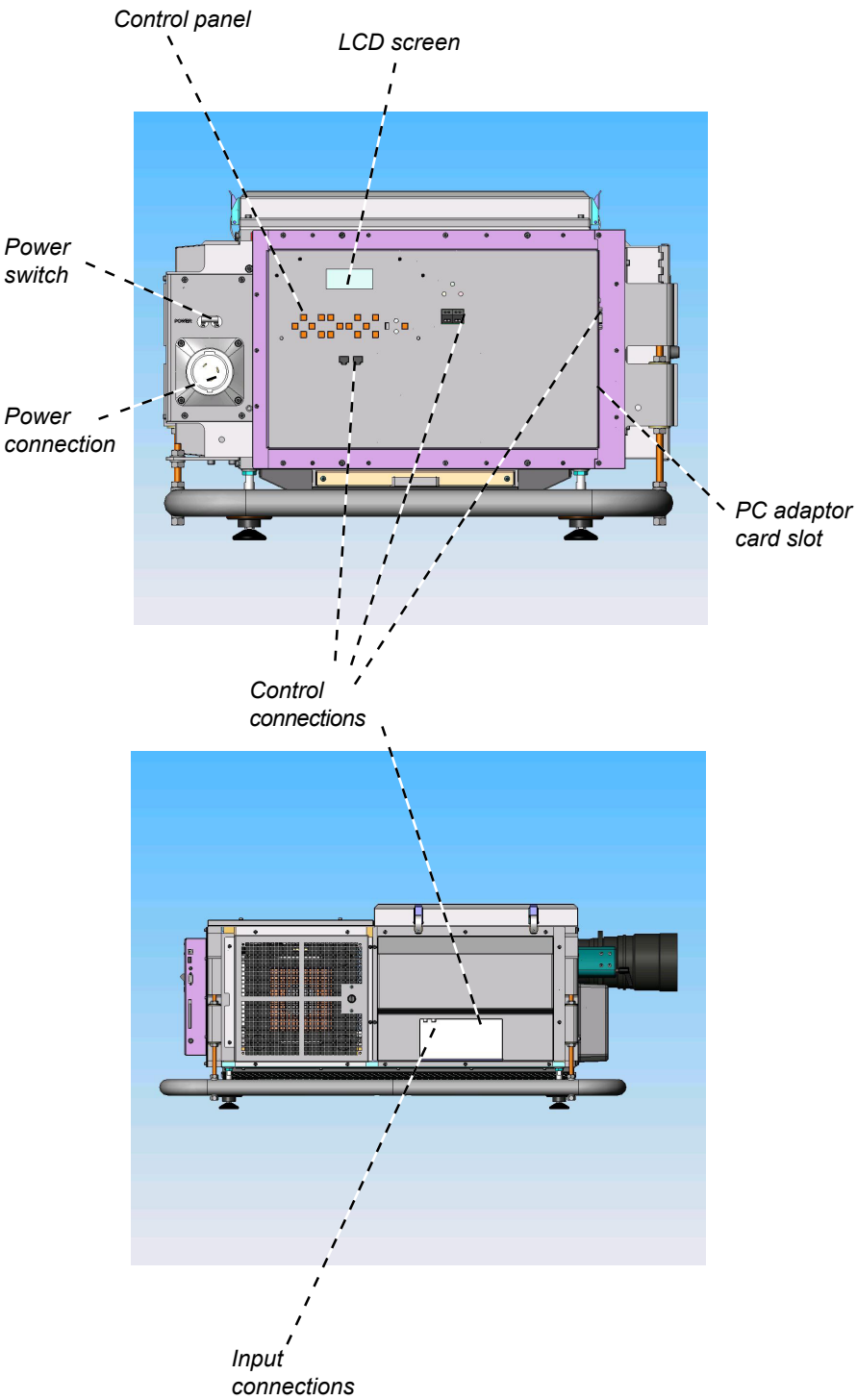

Notes

For information about how to use the control panel, see section **4. Controlling the projector**.

For information about how to connect the projector, see **Connecting the projector** *in section* **2. Installation**, *and* ***Connections*** *in section* ***6. Appendix***.

2. Installation

Contents

Fitting the image to the screen **2.2**
- **Fitting the image to the DMD** **2.2**
  - *Without anamorphic lens* *2.2*
  - *With anamorphic lens* *2.2*
- **Fitting the projected image to the screen** **2.3**
  - *Diagonal screen sizes* *2.4*

Using the anamorphic lens **2.5**
  - *Projecting 2.35:1 format images* *2.5*

Choosing the projection lens **2.6**
- **Method one: using the lens charts** **2.6**
- **Lens charts** **2.7**
  - *Native resolution 2048x1080, no anamorphic lens* *2.7*
  - *2.35:1 full width image with anamorphic lens* *2.8*
  - *2.35:1 full width image, no anamorphic lens* *2.9*
  - *1.85:1 full height image, no anamorphic lens* *2.10*
  - *16:9 full height image, no anamorphic lens* *2.11*
  - *1.66:1 full height image, no anamorphic lens* *2.12*
  - *4:3 full height image, no anamorphic lens* *2.13*
  - *5:4 full height image, no anamorphic lens* *2.14*
- **Method two: Choosing a lens by calculation** **2.15**
- **Useful lens formulae and constants** **2.16**

Fitting the projection lens **2.17**
- **Calibrating the lens** **2.17**

Shifting the image **2.18**

Fitting the anamorphic lens **2.19**
- **Adjusting the anamorphic lens** **2.20**

Positioning the screen and projector **2.21**

Mounting the projector **2.22**
- **Levelling** **2.22**

Fitting the lamp duct box **2.23**

Connecting the projector **2.24**
- **Typical connections** **2.24**
- **Cinema Inputs (SMPTE 292 / HD-SDI)** **2.26**
  - *Fitting a ferrite-core clamp* *2.26*
- **DVI-D Inputs** **2.27**
  - *EDID handshaking* *2.27*
- **Control connections** **2.28**
  - *LAN 1 and LAN 2* *2.28*
  - *Interlocks* *2.28*
  - *USB* *2.29*
  - *Remote Control 1* *2.29*
  - *Remote Control 2* *2.29*
  - *PC Control* *2.29*
  - *PC Control T* *2.29*
  - *General Purpose Input/Output (GPIO)* *2.29*
  - *PC adaptor card slot* *2.29*
- **Power connections** **2.30**
  - *USA power input* *2.30*
  - *Rest of World power input* *2.30*

Fitting the image to the screen

Fitting the image to the DMD

Without anamorphic lens

The projector can be configured by your installer to display a number of standard image formats using the full height of the DMD. This means that the projected screen height can be constant for all image formats, which is preferable for theatres that employ only side-masking.

The exception to this is the 2.35:1 format, which can use the full width, but not the full height of the DMD. Therefore any other image formats would have to be zoomed down to maintain the same height.

With anamorphic lens

The projector can be configured by your installer to correctly display images that have been compressed horizontally (or stretched vertically) by an anamorphic lens when filmed. When the anamorphic lens is deployed, the image will be restored to its correct aspect ratio.

In this configuration, the 2.35:1 format can use the full height of the DMD, and no zooming will be necessary between this and other image formats.

examples of DMD usage when configured for display ***without*** *anamorphic lens*

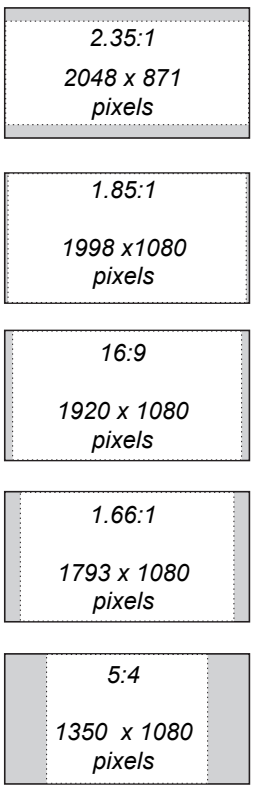

DMD usage when configured for 2.35:1 display ***with*** *anamorphic lens*

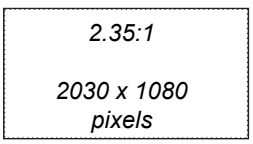

Notes

For more information on how to connect the projector, see **Connecting the projector**, *later in this section, and* **Connections**, *in* **6. Appendix**

The resolution of the DMD fitted to the projector is 2048 x 1080 pixels.

For more information on how the use of the anamorphic lens will affect your choice of projection lens, see **Choosing the lens combination**, *later in this section.*

Fitting the projected image to the screen

It is important that your screen is of sufficient height and width to display images at all the aspect ratios you are planning to use.

Use the conversion chart, or the sample calculations below to check that you are able to display the full image on your screen. If you have insufficient height or width, you will have to reduce the overall image size in order to display the full image on your screen.

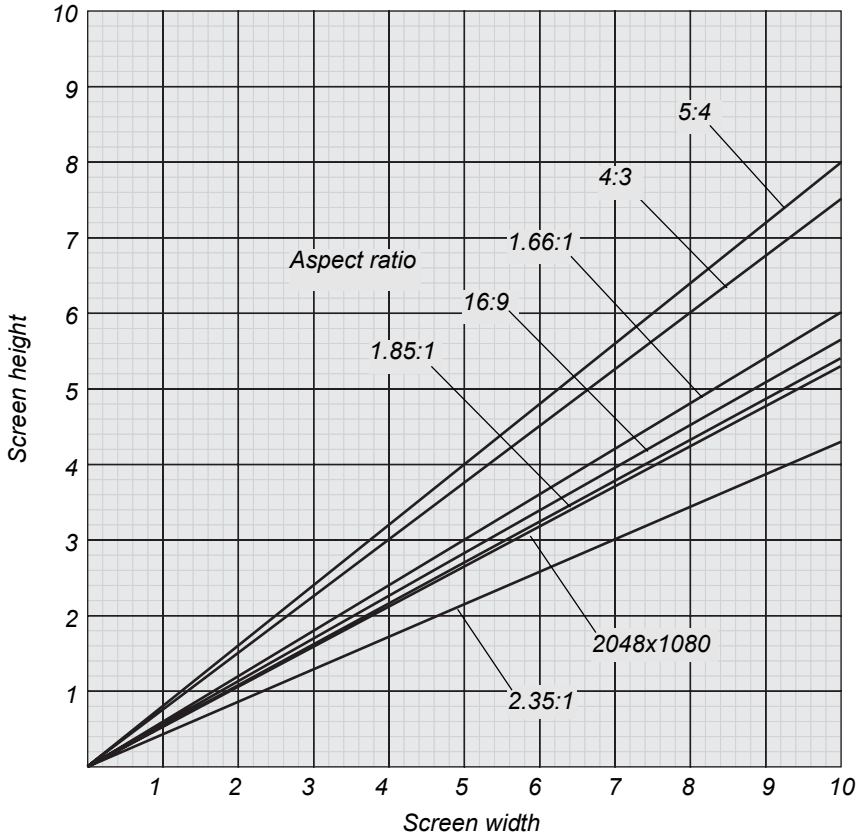

2.35:1 aspect ratio
W = H x 2.35 ***H*** = W x 0.43

2048x1080, native resolution
W = H x 1.9 ***H*** = W x 0.53

1.85:1 aspect ratio
W = H x 1.85 ***H*** = W x 0.54

16:9 aspect ratio
W = H x 1.77 ***H*** = W x 0.56

1.66:1 aspect ratio
W = H x 1.66 ***H*** = W x 0.6

4:3 aspect ratio
W = H x 1.33 ***H*** = W x 0.75

5:4 aspect ratio
W = H x 1.25 ***H*** = W x 0.8

Notes

Diagonal screen sizes

Screen sizes are sometimes specified by their *diagonal size in inches* (D). When dealing with large screens and projection distances at different aspect ratios, it is more convenient to measure screen width (W) and height (H).

The example calculations below show how to convert *diagonal sizes in inches* into *width and height in inches or metres*, at various aspect ratios.

2.35:1 aspect ratio
W = D x 0.92 in = D x .023 m ***H*** = D x 0.39 in = D x .01 m

2048x1080, native resolution
W = D x 0.88 in = D x .022 m ***H*** = D x 0.47 in = D x .012 m

1.85:1 aspect ratio
W = D x 0.88 in = D x .022 m ***H*** = D x 0.48 in = D x .012 m

16:9 aspect ratio
W = D x 0.87 in = D x .022 m ***H*** = D x 0.49 in = D x .0125 m

1.66:1 aspect ratio
W = D x 0.86 in = D x .022 m ***H*** = D x 0.52 in = D x .013 m

4:3 aspect ratio
W = D x 0.8 in = D x .02 m ***H*** = D x 0.6 in = D x .015 m

5:4 aspect ratio
W = D x 0.78 in = D x .02 m ***H*** = D x 0.625 in = D x .016 m

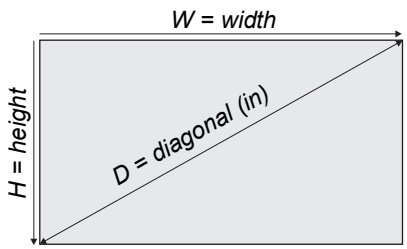

Notes

Using the anamorphic lens

The projector can be configured by your installer to correctly display images that have been compressed horizontally (or stretched vertically) by an anamorphic lens when filmed.

This can be achieved with or without the use of the anamorphic lens.

As can be seen in the examples in **Fitting the image to the DMD**, earlier in this section:

When using the anamorphic lens, all images (including 2.35:1) can be displayed using the full height of the DMD. Therefore the projection lens would not have to be zoomed to display 2.35:1 images.

Projecting 2.35:1 format images

We recommend the use of the anamorphic lens **only** when the mix of images to be displayed includes 2.35:1 format. This will enable all images to be displayed at the same screen height without needing to zoom the projection lens.

Example

If the anamorphic lens is not available:

Where the mix of images to be displayed includes 2.35:1 format, then all other images will need to be zoomed to 80.6% (871/1080) in order to maintain the same screen height. As this is only just within the range of the available zoom lenses, some compromise will be necessary to pick a suitable screen size (see the **Lens Chart** for 2.35:1 images, later in this section).

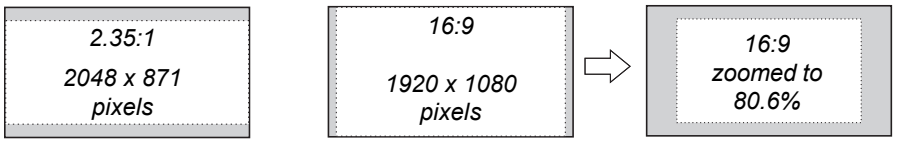

Example

Alternatively, the projector could be configured to reduce all other images to a height of 871 pixels.

Notes

For more information about how the use of the anamorphic lens will affect the way the image is processed, see **Fitting the image to the DMD***, earlier in this section.*

For more information about how to fit and adjust the anamorphic lens, see **Fitting the anamorphic lens***, later in this section.*

Choosing the projection lens

A number of lenses are available for use with the projector. Which lens you choose will depend on the screen size, image aspect ratio and projection distance.

If the mix of images to be displayed includes images of varying aspect ratio, then you should base your choice of lens on the **widest** image that is to be projected.

Method one: using the lens charts

For the image sizes listed below, use one of the charts on the following pages, to choose a lens.

full width images, including:

native resolution	2048 x 1080 pixels
2.35:1 full width	2048 x 871 pixels

If the image does not fill the full width of the DMD, this effectively increases the throw ratio of the lens. This can be corrected for by applying a Throw Ratio Factor.

A Throw Ratio Factor (TRF) has been applied to the following charts:

1.85:1 full height	1998 x 1080 pixels
16:9 full height	1920 x 1080 pixels
1.66:1 full height	1793 x 1080 pixels
4:3 full height	1440 x 1080 pixels
5:4 full height	1350 x 1080 pixels

Method two: by calculation

See the calculations, on the page immediately following the lens charts.

Notes

For more information about how to fit and adjust the projection lens, see **Fitting the projection lens***, later in this section.*

For more information about how to determine the image size in pixels, see **Fitting the image to the DMD***, earlier in this section.*

For more information about Throw ratio factor (TRF), see **Useful lens calculations***, later in this section.*

This projector does not perform any image processing on signals connected to the DVI-D inputs - an external image processor such as the MMS 1000 is recommended for this purpose.

If the anamorphic lens is being used, then the images will be projected with a 1.25x increase in width. This can be corrected by scaling the signal using an external image processor.

Lens charts

Native resolution** 2048x1080**, no anamorphic lens

Use the chart below to choose which lens best suits your application.

example

- *For a screen width of 15m at a distance of 25m, the 1.45 - 1.8: 1 lens would be best suited.*
- *For the same screen size at a distance of 32m, the 1.8 - 2.4: 1 lens would be best suited.*

if you need to be more precise, then use the calculations on the page immediately following the lens charts.

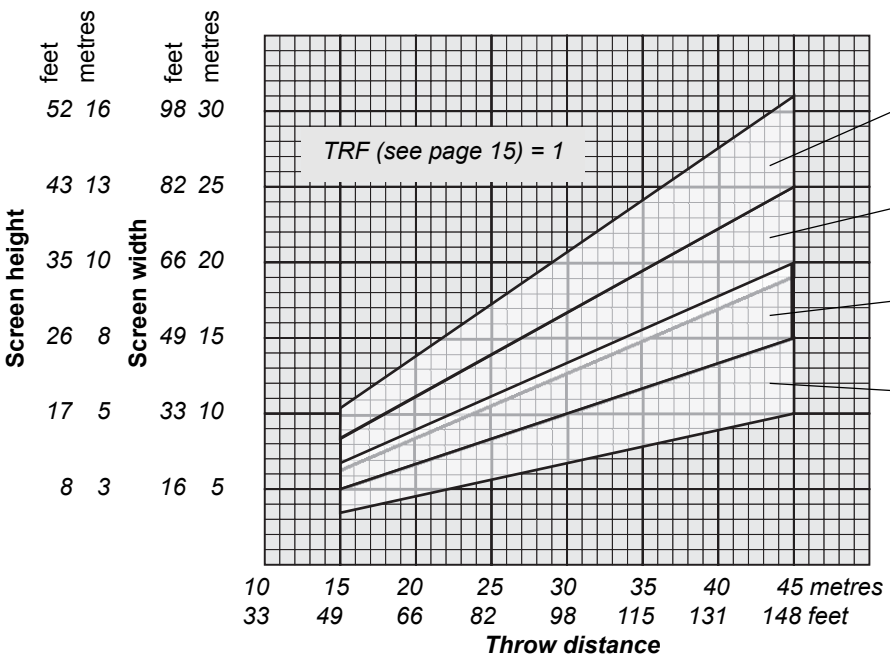

Notes

*If the mix of images to be displayed includes images of varying aspect ratio, then you should base your choice of lens on the **widest** image that is to be projected.*

The lenses available and their part numbers are listed below:

1.45 - 1.8: 1 zoom lens	*102-933*
1.8 - 2.4: 1 zoom lens	*102-934*

(note: these two lenses overlap)

2.2 - 3.0: 1 zoom lens	*102-935*
3.0 - 4.3: 1 zoom lens	*102-936*

Lens charts, continued

2.35:1 full width image with anamorphic lens

Use the chart below to choose which lens best suits your application.

if you need to be more precise, then use the calculations on the page immediately following the lens charts.

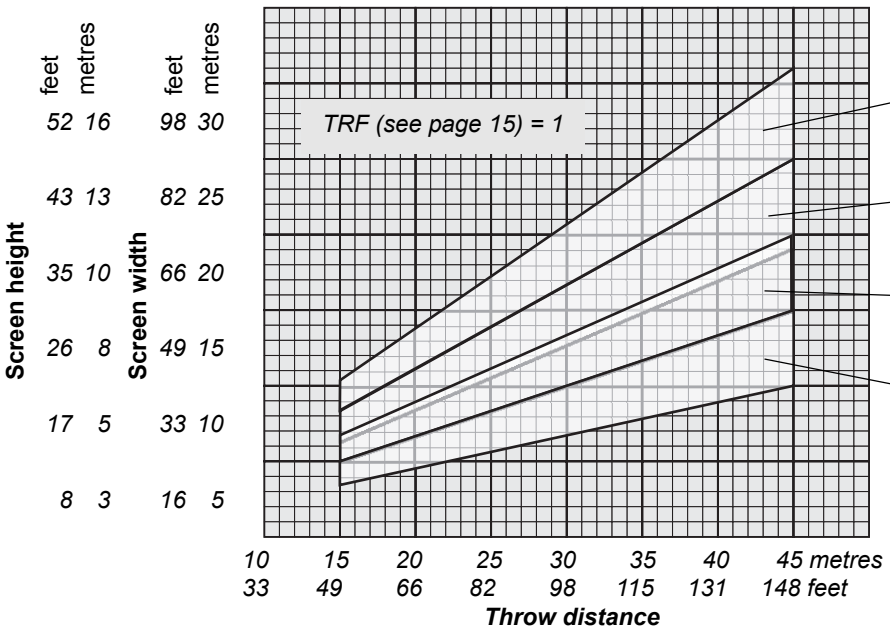

Notes

*If the mix of images to be displayed includes images of varying aspect ratio, then you should base your choice of lens on the **widest** image that is to be projected.*

The lenses available and their part numbers are listed below:

1.45 - 1.8: 1 zoom lens *102-933*

1.8 - 2.4: 1 zoom lens *102-934*

(note: these two lenses overlap)

2.2 - 3.0: 1 zoom lens *102-935*

3.0 - 4.3: 1 zoom lens *102-936*

Lens charts, continued

2.35:1 full width image, no anamorphic lens

Use the chart below to choose which lens best suits your application.

if you need to be more precise, then use the calculations on the page immediately following the lens charts.

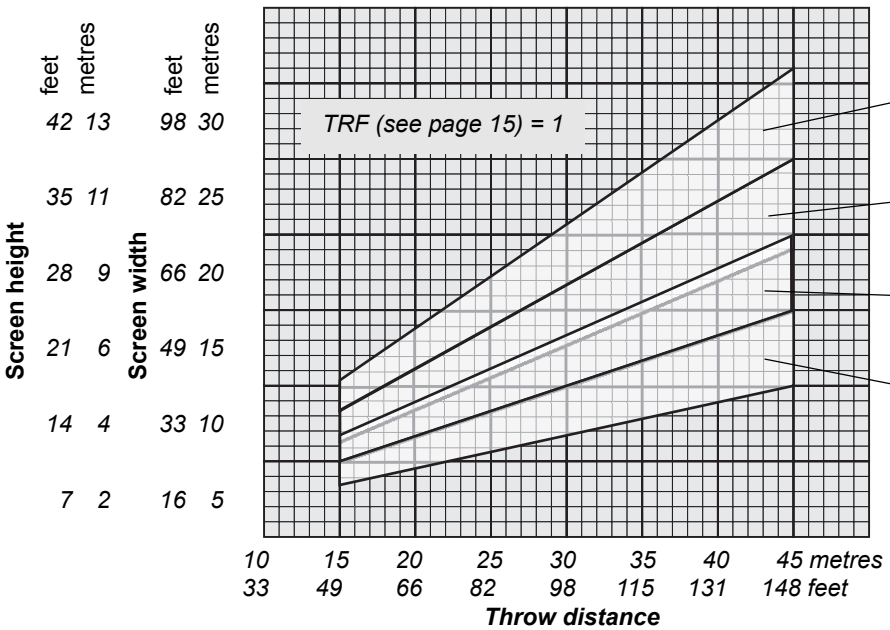

2.35:1 full width image without anamorphic lens

Where the mix of images to be displayed includes 2.35:1 format, and there is no anamorphic lens, then:

- all other images will need to be zoomed to 80.6% (871/1080) in order to maintain the same screen height.

As this is only just within the range of the available zoom lenses, some compromise will be necessary to pick a suitable screen size.

example

- *at a distance of 40m, the 1.45 - 1.8 lens will zoom only from 27.5m to 22m screen width*
- *at a distance of 24m, the 3.0 - 4.3 lens will zoom only from 8.0m to 5.5m screen width*

Notes

*If the mix of images to be displayed includes images of varying aspect ratio, then you should base your choice of lens on the **widest** image that is to be projected.*

The lenses available and their part numbers are listed below:

1.45 - 1.8: 1 zoom lens *102-933*

1.8 - 2.4: 1 zoom lens *102-934*

(note: these two lenses overlap)

2.2 - 3.0: 1 zoom lens *102-935*

3.0 - 4.3: 1 zoom lens *102-936*

Lens charts, continued

1.85:1 full height image, no anamorphic lens

Use the chart below to choose which lens best suits your application.

if you need to be more precise, then use the calculations on page 5:

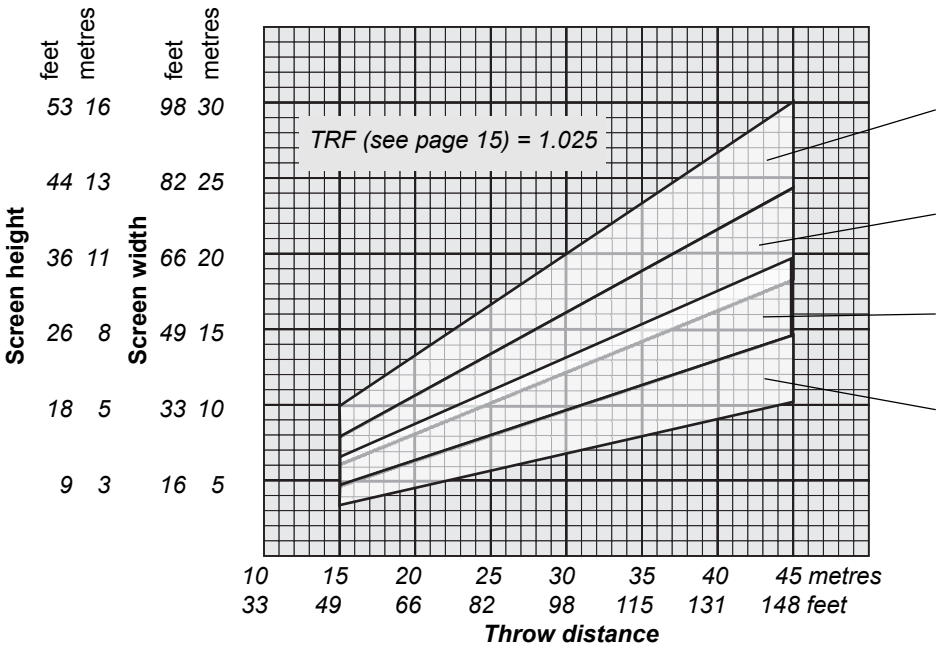

Notes

For an example of how to use the lens charts, see the first chart.

The lenses available and their part numbers are listed below:

1.45 - 1.8: 1 zoom lens *102-933*

1.8 - 2.4: 1 zoom lens *102-934*

(note: these two lenses overlap)

2.2 - 3.0: 1 zoom lens *102-935*

3.0 - 4.3: 1 zoom lens *102-936*

Lens charts, continued

16:9 full height image, no anamorphic lens

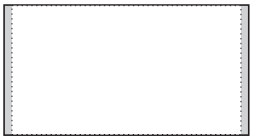

Use the chart below to choose which lens best suits your application.

if you need to be more precise, then use the calculations on page 5:

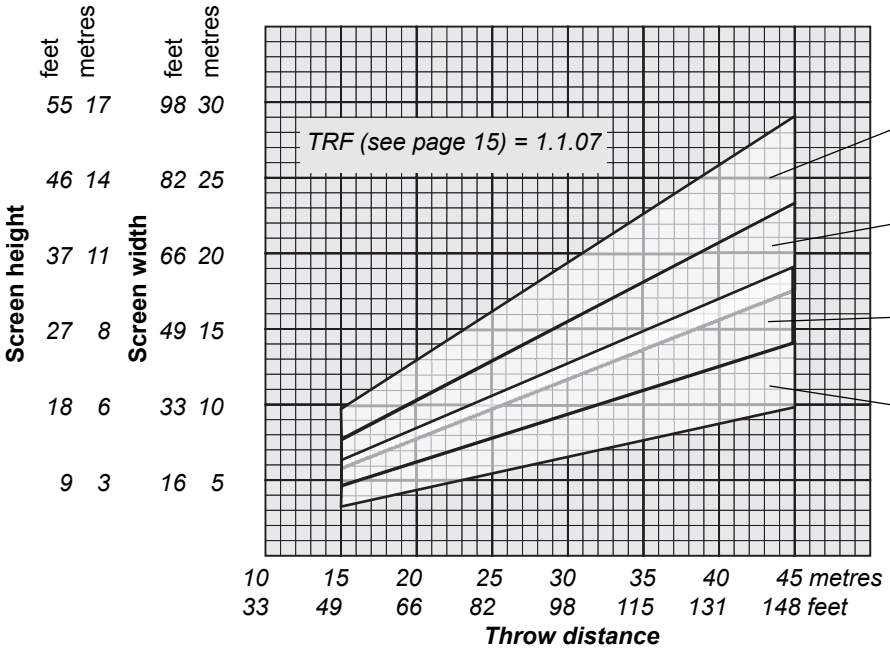

Notes

For an example of how to use the lens charts, see the first chart.

The lenses available and their part numbers are listed below:

1.45 - 1.8: 1 zoom lens *102-933*

1.8 - 2.4: 1 zoom lens *102-934*

(note: these two lenses overlap)

2.2 - 3.0: 1 zoom lens *102-935*

3.0 - 4.3: 1 zoom lens *102-936*

Lens charts, continued

1.66:1 full height image, no anamorphic lens

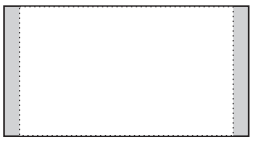

Use the chart below to choose which lens best suits your application.

if you need to be more precise, then use the calculations on page 5:

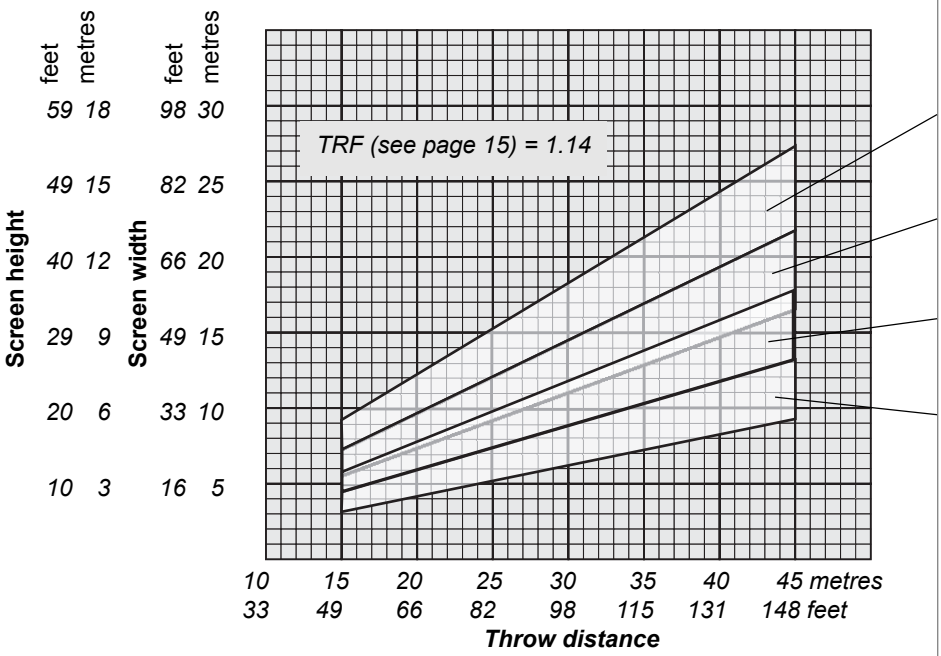

Notes

For an example of how to use the lens charts, see the first chart.

The lenses available and their part numbers are listed below:

1.45 - 1.8: 1 zoom lens *102-933*

1.8 - 2.4: 1 zoom lens *102-934*

(note: these two lenses overlap)

2.2 - 3.0: 1 zoom lens *102-935*

3.0 - 4.3: 1 zoom lens *102-936*

Lens charts, continued

4:3 full height image, no anamorphic lens

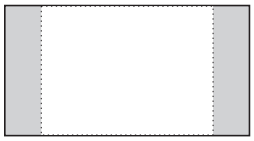

Use the chart below to choose which lens best suits your application.

if you need to be more precise, then use the calculations on page 5:

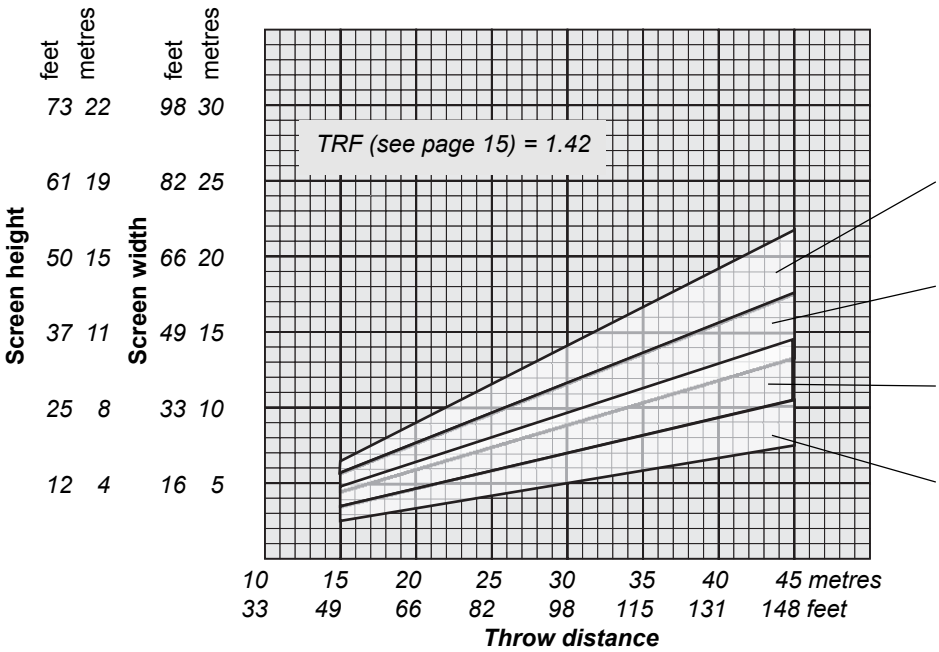

Notes

For an example of how to use the lens charts, see the first chart.

The lenses available and their part numbers are listed below:

1.45 - 1.8: 1 zoom lens *102-933*

1.8 - 2.4: 1 zoom lens *102-934*

(note: these two lenses overlap)

2.2 - 3.0: 1 zoom lens *102-935*

3.0 - 4.3: 1 zoom lens *102-936*

Lens charts, continued

5:4 full height image, no anamorphic lens

Use the chart below to choose which lens best suits your application.

if you need to be more precise, then use the calculations on page 5:

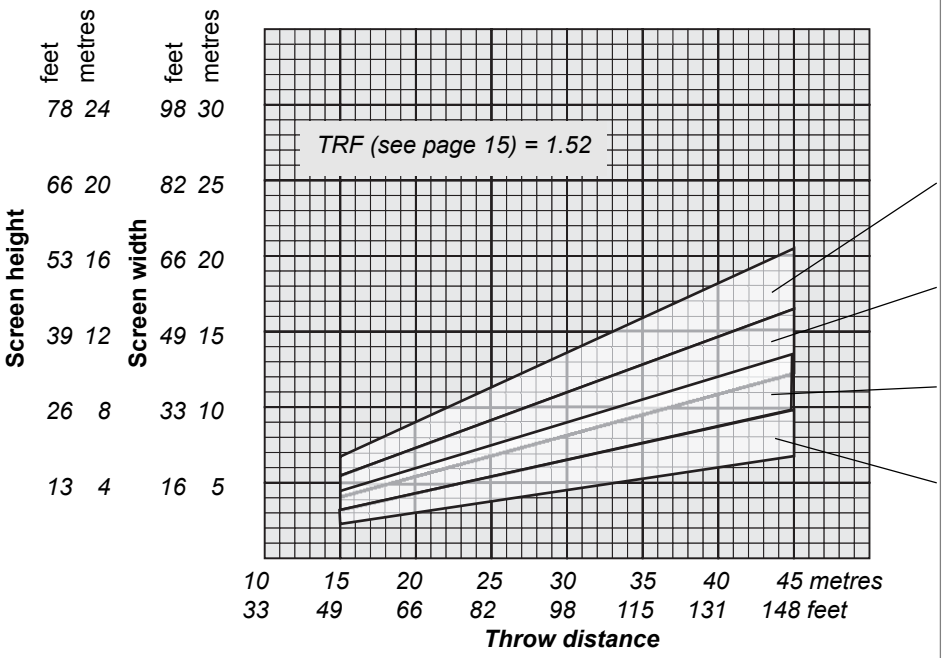

Notes

For an example of how to use the lens charts, see the first chart.

The lenses available and their part numbers are listed below:

Method two: Choosing a lens by calculation

For any screen size not covered by the lens charts, or if you need to be more precise, then use the calculations below.

- Identify actual width of the image in pixels.
- Calculate the Throw Ratio Factor: $TRF = \frac{\text{DMD width (2048)}}{\text{Image width in pixels}}$
- Identify the screen width required.
- Identify the throw distance required.

  Throw distance calculations are based on the distance from the outer end of the lens, which will vary from lens to lens. Once a lens has been chosen, the figures can be checked using the more accurate figures given on the next page.

- Calculate the throw ratio required. $\text{Throw ratio} = \frac{\text{Throw distance}}{\text{Screen width x TRF}}$
- Choose a lens with the required throw ratio from the list to the right.

example

- A 1.66:1 full height image, 1793 x 1080 pixels, screen width 11m, throw distance 26m from the outer end of the lens.
- Throw Ratio Factor (TRF) = $\frac{2048}{1793} = 1.142$
- Throw ratio required = $\frac{26}{11 \times 1.142} = 2.07$
- Choose the **1.8 - 2.4: 1 zoom lens**

Notes

The Throw ratio for a particular lens is fixed, but assumes that the image fills the width of the DMD.

For images that do not fill the width of the DMD, the Throw ratio is effectively increased. To correct for this in these calculations, a Throw Ratio Factor (TRF) is used.

The lenses available and their part numbers are listed below:

1.45 - 1.8: 1 zoom lens *102-933*

1.8 - 2.4: 1 zoom lens *102-934*

(note: these two lenses overlap)

2.2 - 3.0: 1 zoom lens *102-935*

3.0 - 4.3: 1 zoom lens *102-936*

Useful lens formulae and constants

The following lens calculations may be useful:

Throw ratio = $\frac{\text{Throw distance}}{\text{Screen width}}$

Throw ratio factor (TRF) = $\frac{\text{DMD width in pixels}}{\text{image width in pixels}} = \frac{2048}{\text{image width in pixels}}$

Therefore:

Screen width = $\frac{\text{Throw distance (from outer end of lens)}}{\text{Throw ratio x TRF}}$

Throw distance = Screen width x Throw ratio x TRF

The throw distance calculated above is to the outer end of the lens. For each lens, the nominal distance between the front of the projector and the outer end of the lens (lens extension) will be as listed below:

		lens extension
1.45 - 1.8: 1 zoom lens	*102-933*	109mm (4.3in)
1.8 - 2.4: 1 zoom lens	*102-934*	97mm (3.8in)
2.2 - 3.0: 1 zoom lens	*102-935*	53mm (2.1in)
3.0 - 4.3: 1 zoom lens	*102-936*	98mm (3.9in)

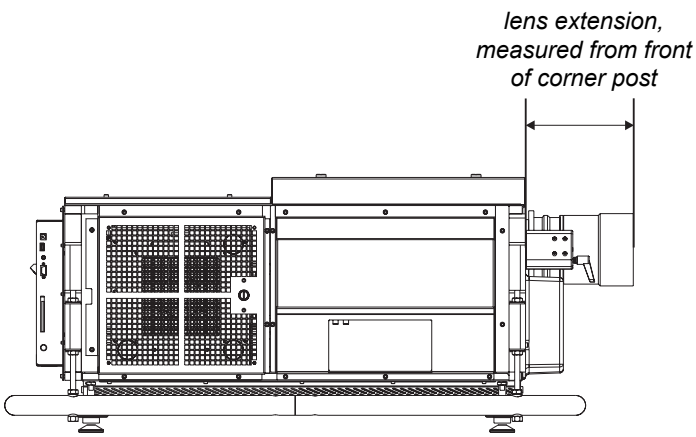

Notes

Lens extension is measured when the lens is focussed at infinity, and fully extended. At other focus settings, the extension could be up to 10mm less

Fitting the projection lens

- Turn the lens release lever anti-clockwise to open the lock.
- Turn the zoom drive lever anti-clockwise to disengage the drive.
- Insert the lens into the lens aperture, making sure that the two notches on the lens engage with the locating tab inside the lens mount.
- Turn the lens release lever clockwise to lock the lens in place. When the lock is fully closed, the lever should feel loose.
- Turn the zoom drive lever clockwise to engage the drive.

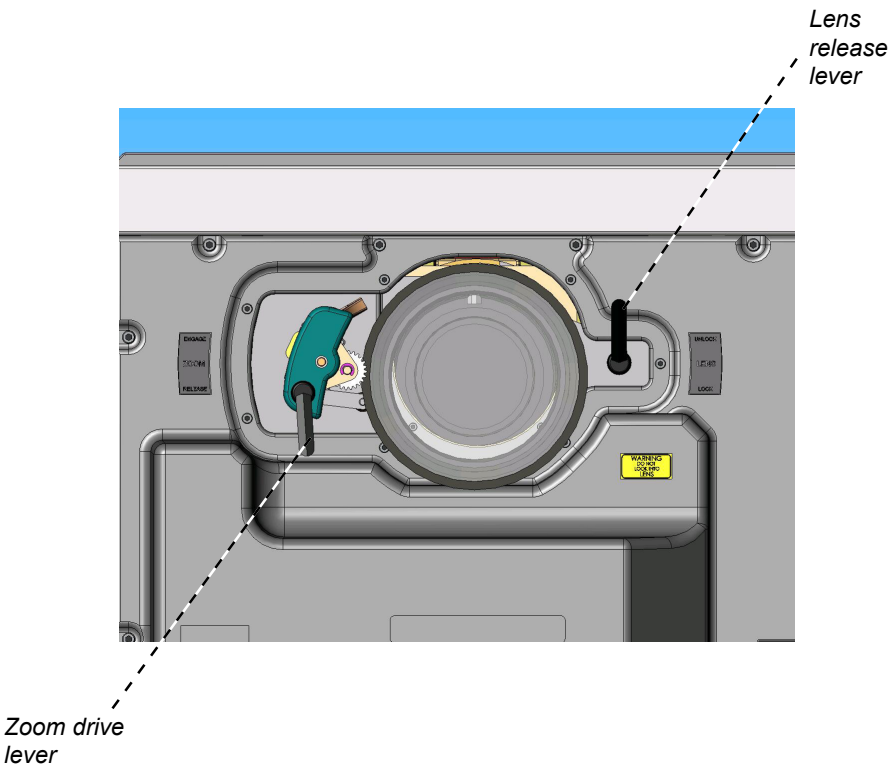

Calibrating the lens

- **Each time a new lens is fitted to the projector, or the zoom drive lever is operated, the calibration procedure MUST be carried out.**

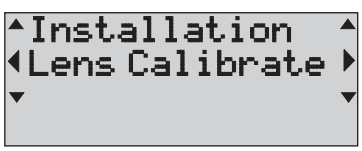

- For more information about how to do this, see the example in **Using the Menus** in **Section 4. Controlling the projector.**

Notes

Each time a new lens is fitted to the projector, or the zoom drive lever is operated, the calibration procedure MUST be carried out. See Using the Menus in Section 4. Controlling the projector.

Be careful not to scratch the lens surfaces. If you do accidentally touch a lens, then clean the surface using a lens paper.

The zoom drive mechanism should always be set to the engaged position, even when using the non-zoom lens, as it provides an extra level of protection, should the lens release lever fail.

Shifting the image

The normal position for the projector is at the centre of the screen. However, you can set the projector above or below the centre, or to one side, and adjust the image using the **Lens shift** feature to maintain a geometrically correct image.

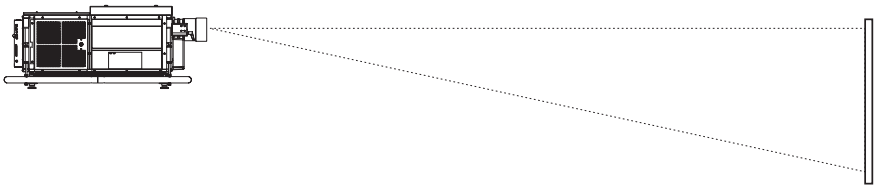

- Any single adjustment outside the ranges specified below may result in an unacceptable level of distortion, paricularly at the corners of the image, due to the image passing through the periphery of the lens optics.
- If the lens is to be shifted in two directions combined, the maximum range without distortion will be somewhat less, as can be seen in the diagrams to the right.

The maximum range available with no distortion is dependent on which lens is used. The tables below show the maximum range for images that fill the DMD. For images which do not use the full height or width, extra shift will be possible, up to the limit of the lens mount movement.

vertical (pixels)	*horizontal (pixels)*	*vertical (vs DMD height)*	*horizontal (vs DMD width)*
± 282	*± 172*	*± 0.26H*	*± 0.085W*

It is physically possible to shift the lens further than this, up to the number of pixels shown in the diagram to the right. However:

- There will be some distortion of the image beyond the ranges specified above.
- Due to internal hardware layout, the shift towards the upper-right is limited as shown in the diagram.
- Due to continuing product development, these figures may vary by ±25 pixels.

Notes

For more information on adjusting the projection lens, see **Displaying a test pattern** *and* **Adjusting the projected image** *in* ***section 3. Getting started****.*

If the lens is to be shifted in two directions combined, the maximum range is somewhat less, as can be seen below.

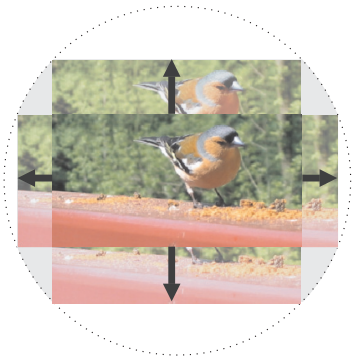

full horizontal and vertical shift without distortion

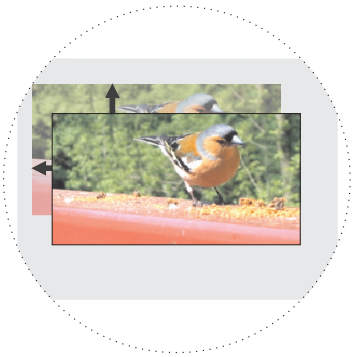

combined shift without distortion is reduced

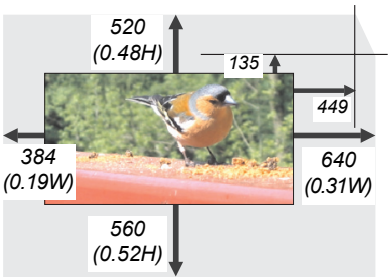

total lens mount shift available in pixels and vs DMD size

Fitting the anamorphic lens

The anamorphic lens mount may be supplied as a partially disassembled kit . If necessary, follow these instructions to assemble:

- Attach the two support arms to the front corner posts of the projector, ensuring that the slide poles are parallel to each other.
- Loosen the two slide clamps and slide the lens carriage onto the slide poles.
- Attach the cross brace to the ends of the support poles.
- Connect the flying lead into the socket below and to the right of the lens.

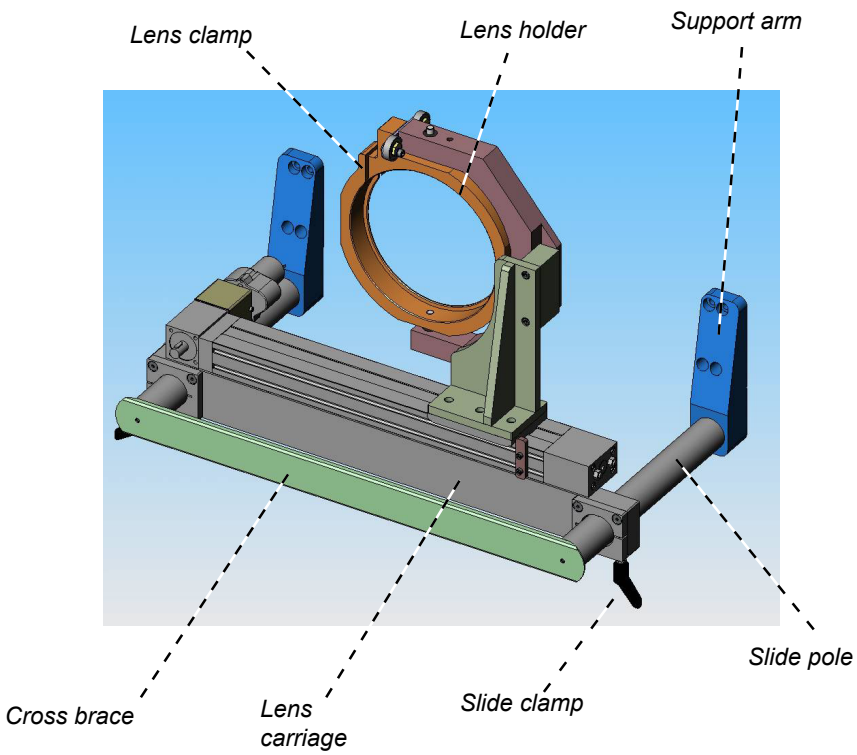

If the projection lens has not already been fitted, fit it now, and adjust the position and focus. This will ensure that the lens is in the right position, so that the position of the anamorphic lens can be adjusted correctly.

- Loosen the lens clamp, position the anamorphic lens in the lens holder, and tighten the clamp screws.
- Loosen the slide clamp and slide the carriage in until the anamorphic lens is approximately 2-5mm from projection lens. Tighten the slide clamp screws.
- Re-check the projection lens clearance after adjusting the alignment (overleaf).

Notes

Be careful not to scratch the lens surfaces. If you do accidentally touch a lens, then clean the surface using a lens paper.

The projection lens should be fitted and adjusted before fitting the anamorphic lens into the lens holder.

For more information on adjusting the projection lens, see **Displaying a test pattern** *and* **Adjusting the projected image** *in* ***section 3. Getting started****.*

Adjusting the anamorphic lens

Before use, the anamorphic lens needs to be adjusted so that:

- it is parallel to the projection lens in both horizontal and vertical planes,
- the centres of the two lenses are in line, and
- the anamorphic image expansion is horizontal.

Vertical plane

- Adjust the two screws, ensuring that after adjustment, both screws are in contact with the vertical support.

Horizontal plane

- Loosen the locking screws, and rotate the two bearings, ensuring that after adjustment, both bearings are in contact with the horizontal support.

Vertical position

- Adjust the two screws, ensuring that after adjustment, both screws are in contact with the lens holder.

Horizontal position

Two microswitches are located at each end of the lens carriage, on the side nearest the projector. The central bracket determines the horizontal position of the lens when the lens is moved into position.

- Adjust the position of the central microswitch bracket.

Lens rotation

- Loosen the lens clamp and rotate the lens within the lens holder.

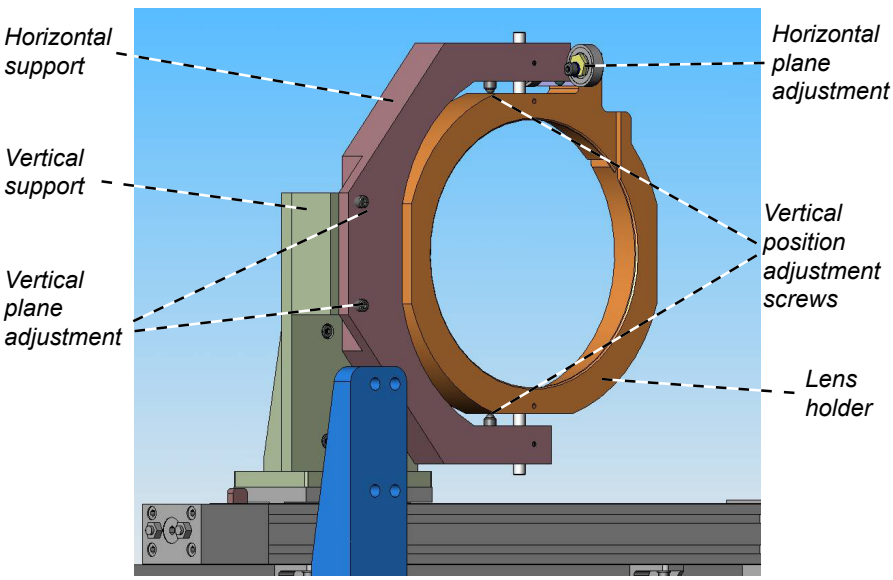

Notes

Re-check the projection lens clearance (see previous page) after making these adjustments.

Positioning the screen and projector

For optimum viewing, the screen should be a flat surface perpendicular to the floor. The bottom of the screen should be 1.2m (4 feet) above the floor and the front row of the audience should not have to look up more than 30° to see the top of the screen.

The distance between the front row of the audience and the screen should be at least twice the screen height and the distance between the back row and the screen should be a maximum of 8 times the screen height. The screen viewing area should be within a 60° range from the face of the screen.

The image can be flipped for rear projection (see **section *4. Using the menus***, ***Menu trees***) and displayed without the need for extra mirrors or equipment. However, you must ensure that there is sufficient distance behind the screen for the projector to be correctly located.

Rear installation is generally more complicated and advice should be sought from your provider before attempting it.

Notes

The projector should be installed as close to the power outlet as possible.

The power connection should be easily accessible, so that it can be disconnected in an emergency.

Ensure that there is at least 30cm (12in) of space between the ventilation outlets and any wall, and 10cm (4in) on all other sides.

Do not install the projector close to anything that might be affected by its operational heat, for instance, polystyrene ceiling tiles, curtains etc.

If the projector must be mounted close to people or heat sensitive equipment, then external ducting will be required to remove the hot exhaust air safely.
For more information about external ducting, see **Fitting the lamp duct box***, later in this section.*

Mounting the projector

The four adjustable feet under the chassis allow the projector to be lowered onto a flat surface without any danger of hands being trapped between the carrying handle and the surface.

Levelling

Once in position, adjustment of projector level should be made by turning the four feet under the chassis

Adjustable foot

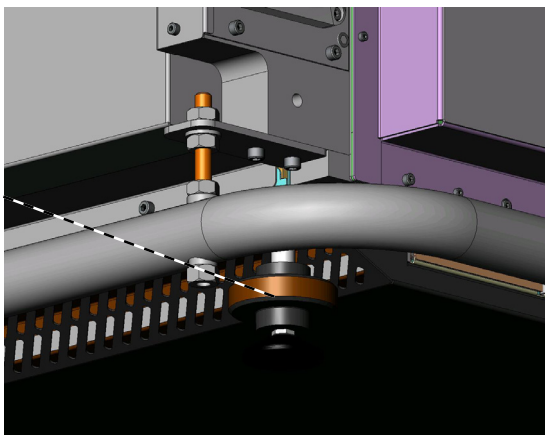

Notes

BEFORE INSTALLING THE PROJECTOR, READ ALL THE WARNINGS BELOW AND ALL THOSE IN *IMPORTANT INFORMATION* AT THE FRONT OF THIS MANUAL.

The projector weighs over 100kg (200lbs). Use safe handling techniques when lifting the projector.

Make sure that the surface that is to support the projector is capable of supporting the combined weight of the projector and lens (see specification for weights)**.**

Do not place heavy objects on top of the projector chassis. The projector chasis is NOT capable of withstanding the weight of another projector.

Do not tilt the projector more than ±12° from side to side when in use, as this may cause serious lamp failure, damage the lamp module and cause extra cost on replacement. The projector my be tilted forwards and backwards as necessary.

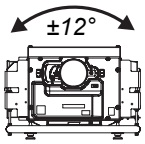

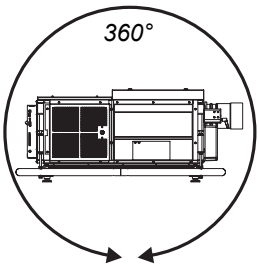

Fitting the lamp duct box

If the lamp duct box is to be used to duct the hot exhaust air from the lamp, this should be fitted using the four screw holes in the lamp compartment door.

Standard 200mm ducting can be used to connect the box to the projection room air extraction system.

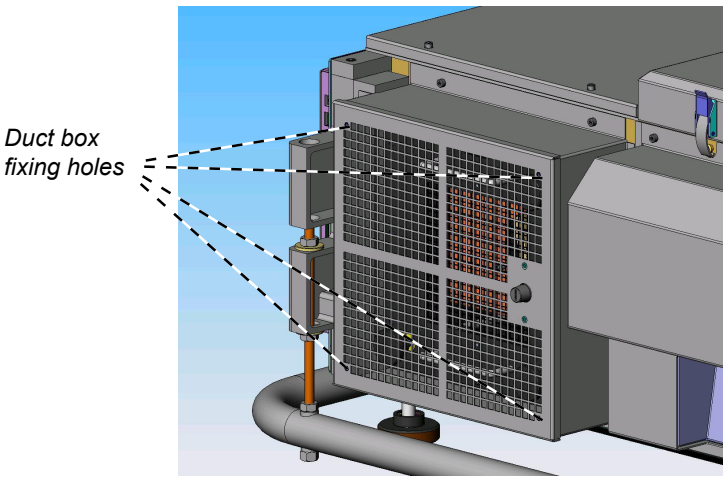

Notes

If the projector must be mounted close to people or heat sensitive equipment, then external ducting will be required to remove the hot exhaust air safely.

Installation of the lamp duct box should be carried out ONLY by certified service personnel.

Connecting the projector

Typical connections

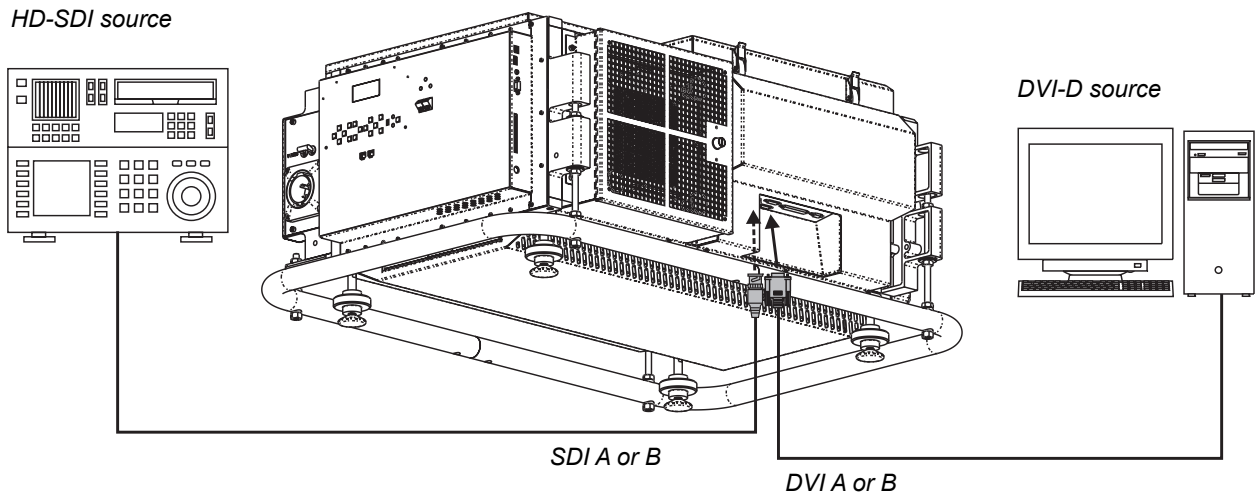

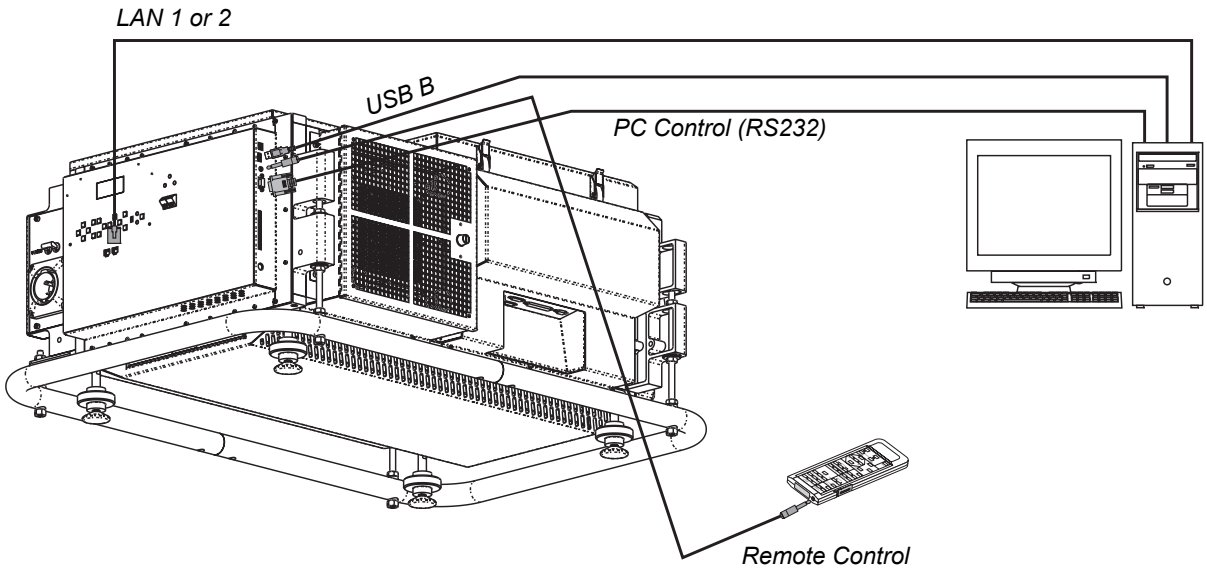

Signal inputs

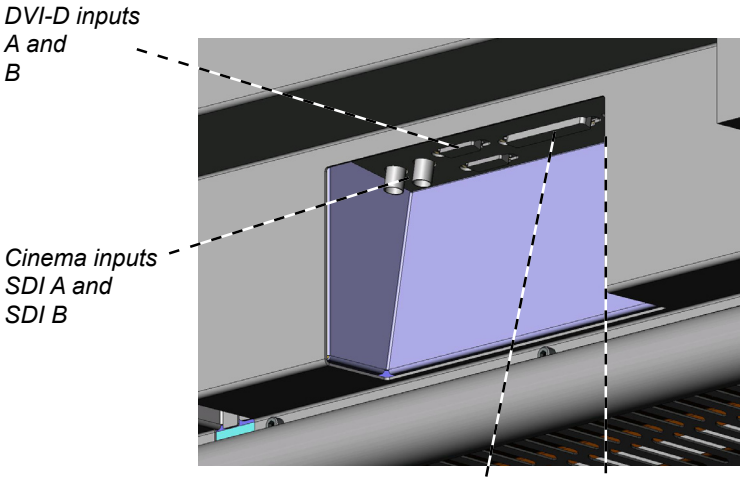

Control inputs

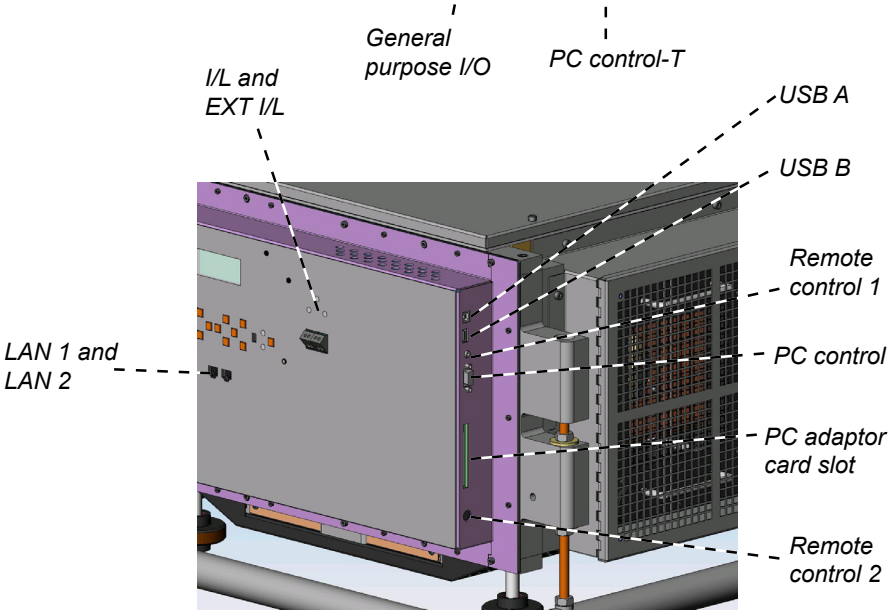

Notes

For more information about input connections see the following pages, and also **Connections**, *in* **section 6. Appendix**.

For more information about supported input formats see **Specification**, *in* **section 6. Appendix**.

For more information about control input connections see the following pages, and also **Connections**, *in* **section 6. Appendix**.

For more information about controlling the projector from a computer, see your provider.

Cinema Inputs (SMPTE 292 / HD-SDI)

For cinema use, this will be the main input port for the projector. The two inputs can be configured as follows:

- one dual SMPTE 292 port
- two separate, individually selectable single SMPTE 292 ports.

The following source formats will be recognised and decoded by the projector electronics:

- SMPTE 274M
- SMPTE RP211
- SMPTE 295M
- SMPTE 260M
- SMPTE 296M

HDSDI is a 1.4Gb link, therefore the following or similar cable specification should be used to ensure fault free communication between source and projector.

- Belden 8281 or equivalent with 75ohm BNC

Cinema inputs SDI A and SDI B

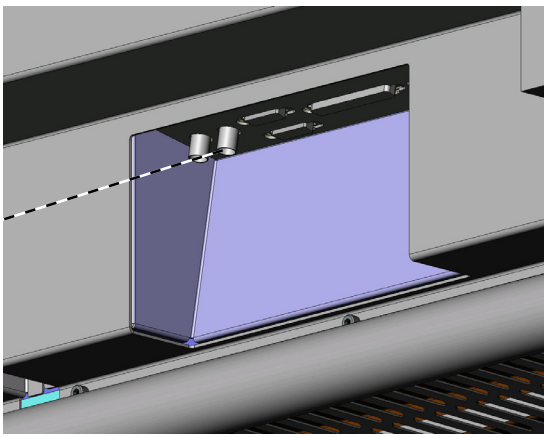

Fitting a ferrite-core clamp

Fit a ferrite-core clamp to each SDI cable used.

- Prise open the catches to open the clamp.
- Position the clamp close to the *projector end* of the SDI cable, and close it firmly around the cable, so that the catches snap shut.
- Fasten a cable tie close to the clamp, to ensure that the clamp stays in place.

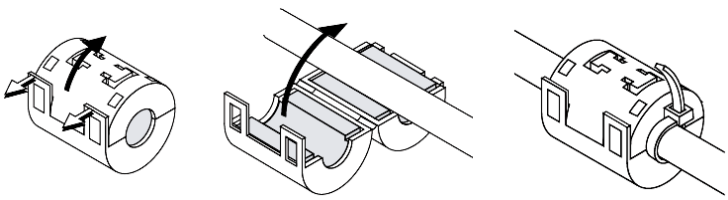

Notes

For more information about input connectors see **Connections**, *in* **section 6. Appendix**.

For more information about supported input formats see **Specification**, *in* **section 6. Appendix**.

A ferrite-core clamp must be fitted to each SDI cable used, to ensure protection from radio frequency interference.

DVI-D Inputs

The projector can also accept signals from a variety of alternative sources, via the two DVI-D inputs. An external image processing unit can be located close to source equipment such as computers, video tape players and DVD players etc. Therefore, only the projector needs to be located in the projection booth.

The two inputs can be configured for use as:

- two separate, individually selectable Single DVI-D inputs
- one Twin link DVI-D input

For short distances, a regular DVI-D cable may be used, but for distances greater than 5 metres the **DigiLink** high bandwidth optical connection system is recommended.

EDID handshaking

If you are using a computer DVI card or other DVI source that obeys the EDID handshaking protocol, then the card or source will automatically configure itself to suit the projector.

If not, then you should refer to the documentation supplied with the DVI source to manually set the resolution to 2048 x 1080 or the nearest suitable setting.

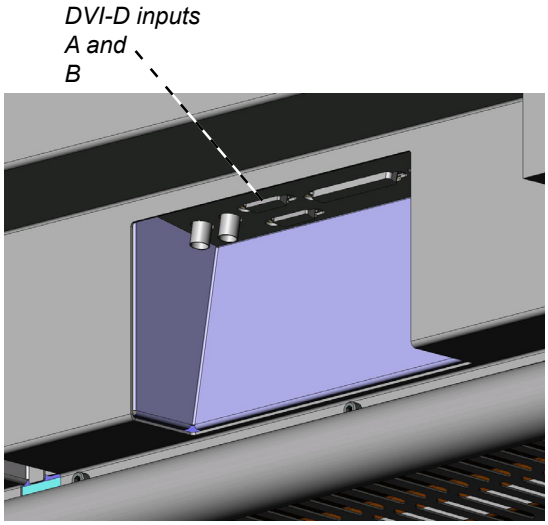

Notes

For more information about input connectors see **Connections**, *in* **section 6. Appendix**.

For more information about supported input formats see **Specification**, *in* **section 6. Appendix**.

Cable complexity and interference can be reduced by using the **Digilink** *high bandwidth optical connection system. Contact your dealer for more information.*

The resolution of the DMD fitted to the projector is 2048 x 1080 pixels.

This projector does not perform any image processing on signals connected to the DVI-D inputs - an external image processor such as the MMS 1000 is recommended for this purpose.

The MMS multimedia switcher does not use EDID protocols, therefore you should use the MMS menus to manually set the output resolution as follows:

- *Switcher Options → Page 5 →Output Resolution → 2k x 1k (2048 x 1080)*

Control connections

LAN 1 and LAN 2

The projector can be controlled from a computer via a LAN connection, using a standard ethernet cable (not supplied).

Interlocks

I/L is a pair of relay contacts, which are normally closed, but are open under the following conditions:

- lamp door open
- insufficient air flow
- over-temperature
- other internal fault (see LCD screen for error message)

The **I/L** contacts can be used for remote monitoring of the projector status (active/ inactive).

The two I/L indicators above the connector block show:

- projector active (green)
  - all interlocks closed
- projector inactive (amber)
  - an internal interlock is open. Lamp off and projector in standby

EXT I/L can be connected to the output contacts of a theatre safety system. If the projector is not connected to a theatre safey system, EXT I/L must be shorted by a wire link, otherwise the projector will go into the inactive state.

The EXT I/L indicator above the connector block shows:

- interlock fail (red)
  - an external interlock is open. Lamp off and projector in standby

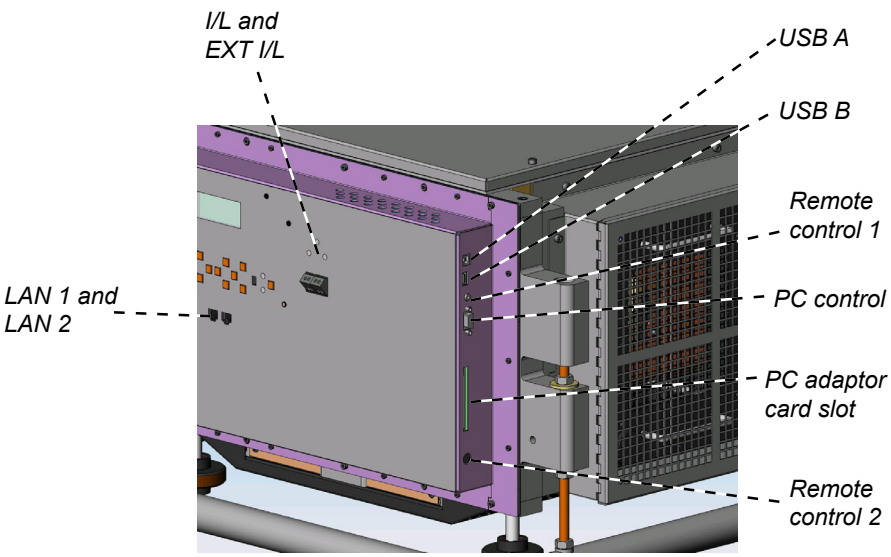

Notes

For more information about control input connections see **Connections**, *in* **section 6. Appendix**.

For more information about controlling the projector from a computer, see your provider.

USB

USB Type A is reserved for future expansion.

USB type B can be used to connect to a computer, using a standard USB cable.

Remote Control 1

Connect the Remote Control (supplied) to this socket.

Remote Control 2

An external switching unit (not supplied) can be connected to this socket.

PC Control

The projector can be controlled from a computer via a serial connection, using a standard RS232 cable (not supplied).

PC Control T

Service or Installation personnel can use this serial connection, to perform advanced setup functions.

General Purpose Input/Output (GPIO)

For future expansion.

PC adaptor card slot

A PC adaptor card can be inserted here including:

- memory card, for firmware updates (supplied)
- wireless network adaptor card, to control the projector from a computer.

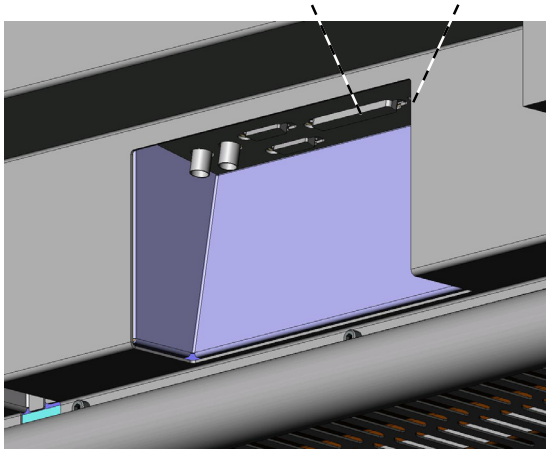

Notes

For more information about control input connections see **Connections**, *in* **section 6. Appendix**.

For more information about controlling the projector from a computer, see your provider.

Power connections

USA power input

Make sure the main power switch is off before connecting the power cable.

Firmly push in the **Hubbell** connector, then turn clockwise to lock.

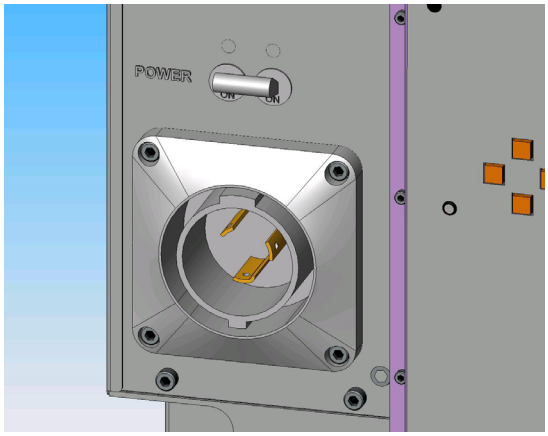

Rest of World power input

Make sure the main power switch is off before connecting.

Lift the lid of the **C-form** connector then firmly push in the connector.

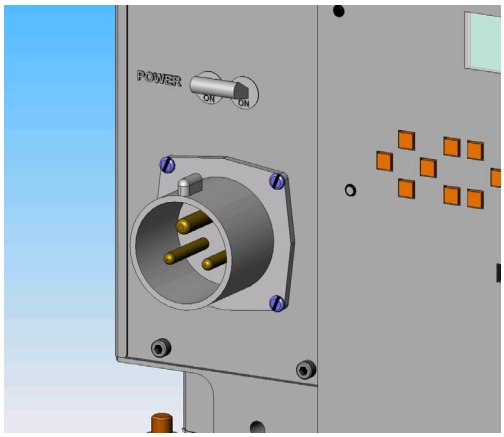

Notes

Use only the power cable provided.

Ensure that the power outlet includes a Ground connection, as this equipment MUST be earthed.

Handle the power cable carefully and avoid sharp bends. Do not use a damaged power cable.

3. Getting started

Contents

Switching the power on 3.2
Selecting a title 3.3
Displaying a test pattern 3.4
Adjusting the projected image 3.5
To adjust the position of the image on the screen: 3.5
To adjust the size of the image on the screen: 3.5
To adjust the focus of the image on the screen: 3.5
Switching the power off 3.6

Switching the power on

- Connect the power cable between the mains supply and the projector.
- Push the main power switch upwards to switch on the power.

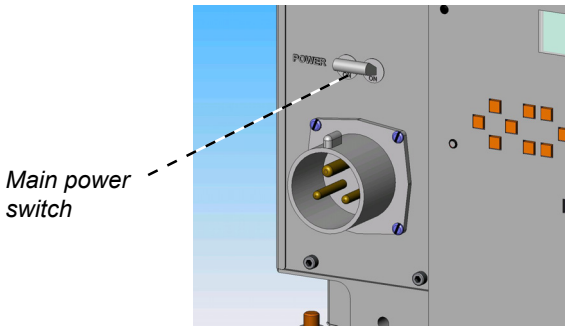

- The projector will initially be in **Standby mode.** The **ON/STANDBY** indicator on the control panel will show orange, and the LCD screen will show Standby:

```
Standby
```

- To switch the projector **ON** from **Standby mode**, press the **POWER** button on the control panel or the **POWER ON** button on the remote control for two seconds.

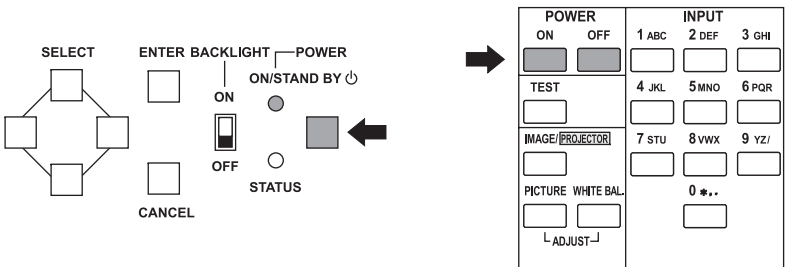

- After about 30 seconds, the **ON/STANDBY** indicator on the control panel will change to green, and the display will show the lamp settings as follows:

```
LampTime     0H
LampPower   60%
   Film One
     292-A
```

Notes

For more information about connecting the power cable, see **Power Connections**, *in* **Section 2. Installation**.

For more detailed information about how to use the control panel and the remote control, see the next section: ***Controlling the projector***.

Selecting a title

- Press the **MENU** button on the control panel or on the remote control.

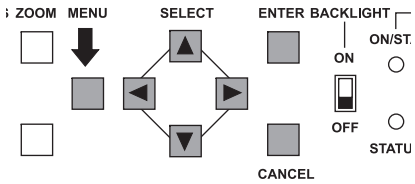

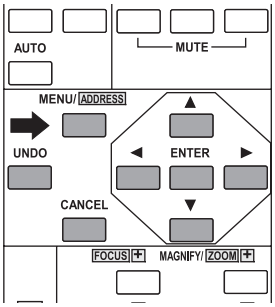

- Press the **SELECT** ◄ or **SELECT** ► buttons until **Source Select** is displayed, as shown below:

- Press the **SELECT** ▼ button, to see the first available title.
- Press the **SELECT** ◄ or **SELECT** ► buttons until the LCD screen shows the name of the title you want to project:

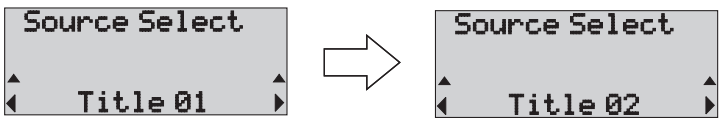

- Press the **SELECT** ▼ button or the **ENTER** button to select the title. The '*' mark shows that this is the currently selected title:

Notes

For more detailed information about how to use the control panel and the remote control, see the next section: ***Controlling the projector****.*

Displaying a test pattern

EITHER

- Use the **Source Select menu** as described on the previous page:
- Press the **SELECT ◄** or **SELECT ►** buttons until **Test Pattern** is displayed, as shown below:

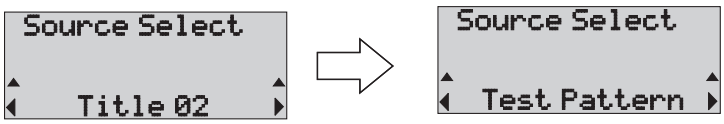

- Press the **SELECT ▼** button or the **ENTER** button to select the **Test Pattern menu**.

OR

- Press the **TEST** button on the remote Control.

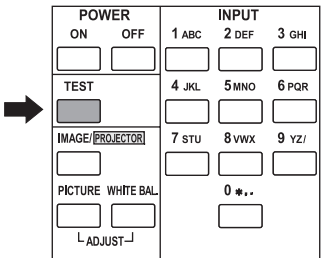

THEN

- Press the **SELECT ◄** or **SELECT ►** buttons until the LCD screen shows the name of the Test Pattern you want to use:

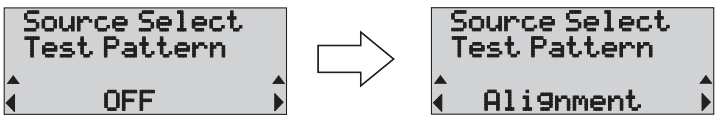

- Press the **SELECT ▼** button or the **ENTER** button to select the test pattern.

Notes

For more detailed information about how to use the control panel and the remote control, see the next section: ***Controlling the projector****.*

Adjusting the projected image

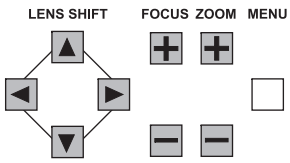

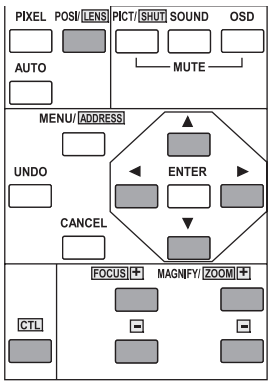

To adjust the position of the image on the screen:

- **EITHER**

  on the control panel, press the **LENS SHIFT** ◄ ► ▲ or ▼ buttons,

  OR

  on the remote control, press **CTL** and *POSI* **LENS** together, release, then press the ◄ ► ▲ and ▼ buttons.

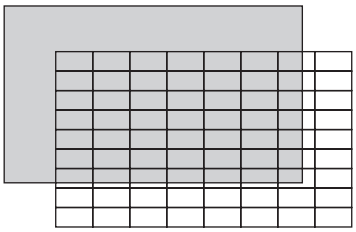

To adjust the size of the image on the screen:

- **EITHER**

  on the control panel, press the **ZOOM +** or **ZOOM –** buttons,

  OR

  on the remote control, press **CTL** with the **ZOOM +** or **ZOOM –** buttons.

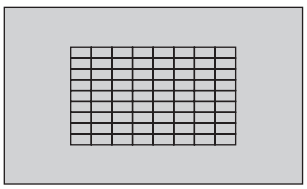

To adjust the focus of the image on the screen:

- **EITHER**

  on the control panel, press the **FOCUS +** or **FOCUS–** buttons,

  OR

  on the remote control, press **CTL** with the **FOCUS +** or **FOCUS –** buttons.

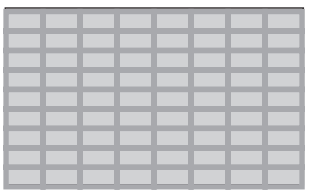

Notes

For more detailed information about all the touch screen menus, see the next section: ***Using the menus****.*

Switching the power off

- To switch the projector back into **Standby mode**, press the **POWER** button on the control panel or the **POWER OFF** button on the remote control for two seconds.

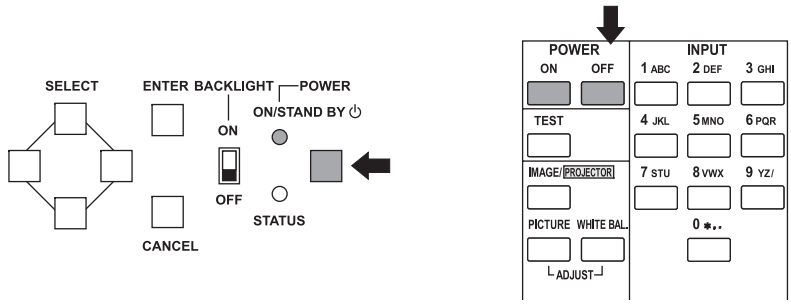

- The **ON/STANDBY** indicator on the control panel will change to orange, and flash on and off.

  The display will show the Cooldown timer, which will count down from 300 seconds to zero.

  At the end of the cooling period, the projector will go into **Standby mode**.

- Push the main power switch downwards to switch off the power.
- Disconnect the power cable.

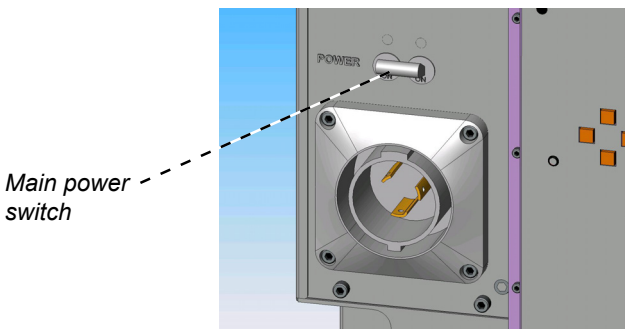

Notes

Always allow the lamp to cool for 5 minutes before:

Switching off the power

Moving the projector

Changing the lamp

4. Controlling the projector

Contents

Introduction **1.2**
- **Using the control panel** **1.2**
- **Using the remote control** **1.3**
  - *Using the alpha-numeric keys* *1.3*
- **Using the menus** **1.4**
  - *At switch on* *1.4*
  - *Navigation through the menu trees* *1.5*
  - *Example: Using the Information menus* *1.6*
  - *Example: Lens Calibration* *1.7*

Menu trees **1.8**
- **Source Select menus** **1.9**
- **Configuration menus** **1.10**
- **Information menus** **1.14**

Introduction

There are three ways to control the projector:

- the buttons and menus available on the control panel;
- the buttons on the remote control
  (in conjunction with the menus on the control panel LCD screen);
- a reduced set of menus on a remote computer using a web browser
  (with the IP address of the projector typed into the browser address field).

None of the menus are ever displayed on the projection screen.

Notes

For information about how to connect the projector, see **Connecting the projector** *in section* **2. Installation***, and* **Connections** *in section* **6. Appendix***.*

For more information about how to use the menus, see **Using the menus***, later in this section.*

For a full listing of all the menus, see **Menu trees***, later in this section.*

When using any menu that requires text or numeric input, you will need to use the remote control.

Using the control panel

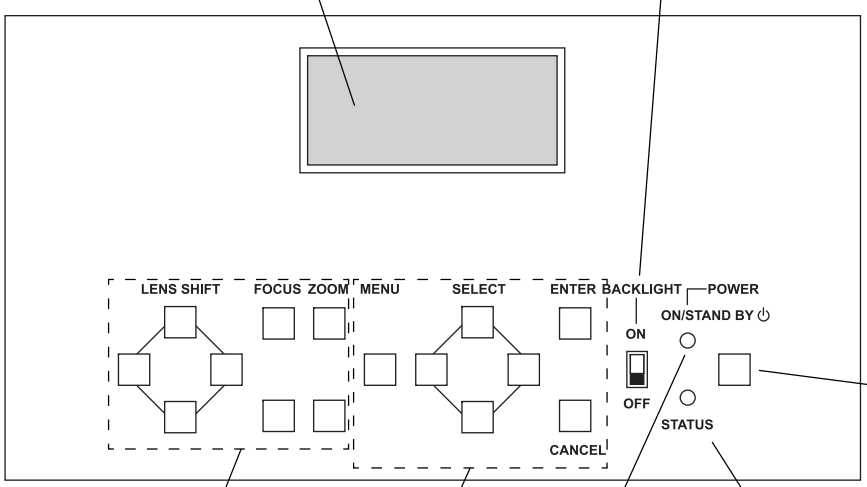

LCD Screen

Backlight switch
for LCD screen

Power button:
On/ Standby

Lens
adjustment buttons

Menu
selection buttons

Status indicator:
off = normal
green flashing = error
(see error code on LCD screen)

Power indicator:
green = power on
green flashing = shutter closed
orange = standby
orange flashing = cooling fans running

Using the remote control

Notes

For more information about how to use the menus, see **Using the menus***, later in this section.*

For a full listing of all the menus, see **Menu trees***, later in this section.*

When using any feature that requires further menu selection, you will need to be within view of the LCD screen on the control panel.

Power: *ON = On*
OFF = Standby

Test *opens Test Pattern menu*

Remote control *ON/OFF*

KEYST (R), AMP (G), ELIST (B)
RGB Mute
Press with ***CTL*** *to turn off Red, Green or Blue component of Test Pattern. Press again to turn back on.*

POSI
LENS

AUTO
Lens Memory
Press with ***CTL*** *to store lens position.*

CTL

Alpha-numeric keys *for text and numbers.*

HELP
Direct Menu Selection *(see* **Menu trees***, later in this section)*

PICT/SHUT
Picture mute
Press to turn picture off. Press again to turn back on.

Shutter
Press with ***CTL*** *to operate shutter.*

Menu *selection buttons*

Lens Shift
Press ***CTL*** *and* POSI ***LENS*** *together, release, then use ◄ ► ▲ ▼ buttons to position the image on the screen.*

Focus and Zoom
Press with ***CTL*** *to adjust focus and zoom.*

Using the alpha-numeric keys

example:

- For **1** press the key marked **1ABC** once.
- For **A** press the key marked **1ABC** twice.
- For **a,** hold the **CTL** key and press the key marked **1ABC** twice.
- For **5** press the key marked **5MNO** once.
- For **n,** hold the **CTL** key and press the key marked **5MNO** twice.

etc

Direct Menu selection*:*

In the **Menu trees** on the following pagees, some menus are marked with a number. To jump directly to those menus using the remote control:

1 Press the HELP ***Direct Menu selection*** *button.*

2 Use the ***Alpha-numeric keys*** *to enter the menu number, including any leading zeroes, eg 005.*

3 Press ***Enter****.*

Using the menus

The menus can be accessed from either the control panel or the remote control, using the menu selection buttons.

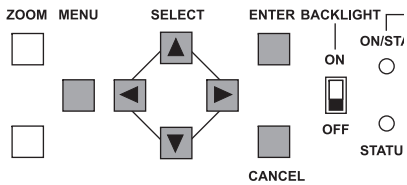

Control panel buttons

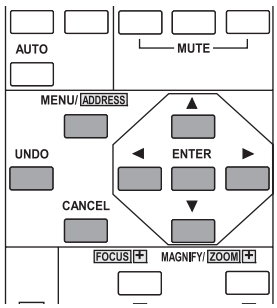

Remote Control buttons

At switch on

The projector will initially be in **Standby mode.** The **ON/STANDBY** indicator on the control panel will show orange, and the LCD screen will show Standby:

- To switch the projector **ON** from **Standby mode**, press the **POWER** button on the control panel or the **POWER ON** button on the remote control for two seconds.

  After about 30 seconds, the **ON/STANDBY** indicator on the control panel will change to green, and the display will show the lamp settings as follows:

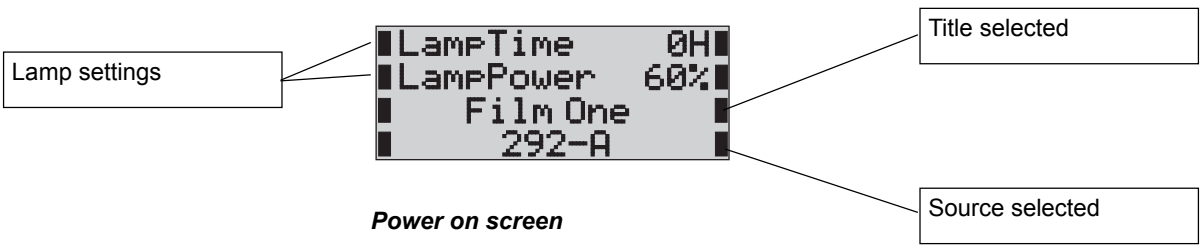

Power on screen

Notes

None of the menus are ever displayed on the projection screen.

For a full listing of all the menus, see **Menu trees***, later in this section.*

When using any menu that requires text or numeric input, you will need to use the remote control.

When using any feature that requires further menu selection, you will need to be within view of the LCD screen on the control panel.

Navigation through the menu trees

- At any time, to see the first item of the **Main menu** , press the **MENU** button.
- To navigate through the Menus and Sub-menus, use the **SELECT** ◄ ► ▲ ▼ **ENTER**, **CANCEL** and **UNDO** buttons, as shown below.

  A full listing of all the menus available is given in **Menu trees**, later in this section.

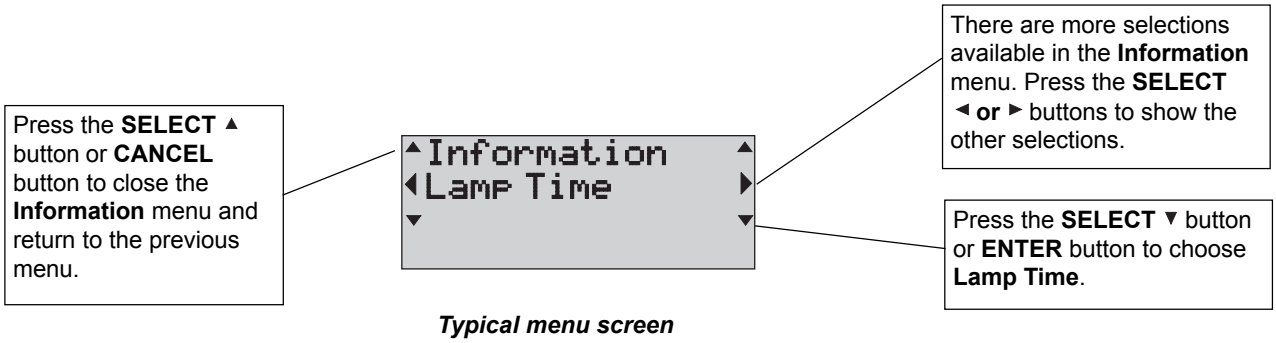

Typical menu screen

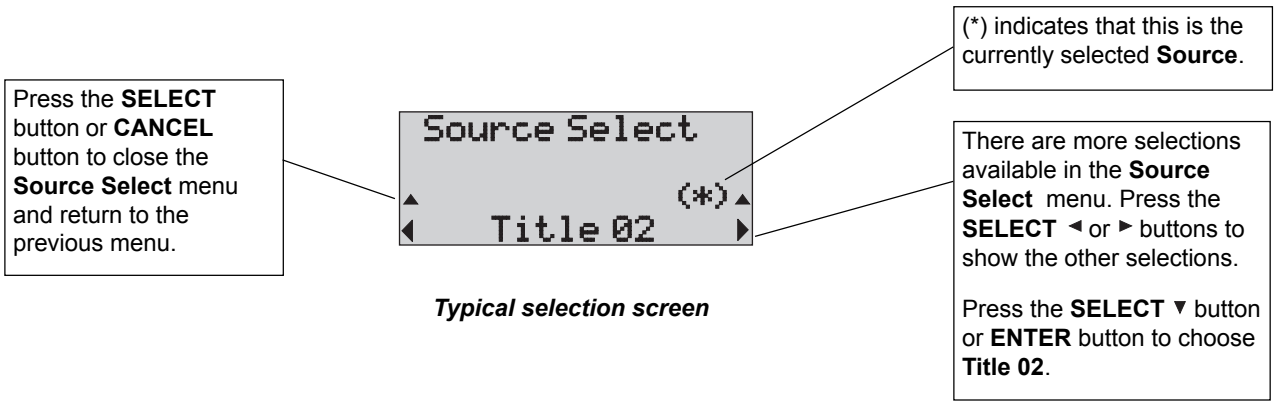

Typical selection screen

Typical data entry screen

Example: Using the Information menus

- Press the **MENU** button on the control panel or on the remote control. The first item of the **Main menu** opens:

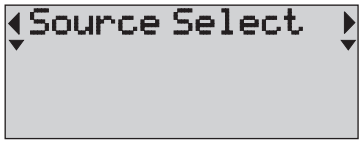

- Press the **SELECT** ◄ or ► buttons to show the sub-menus available:

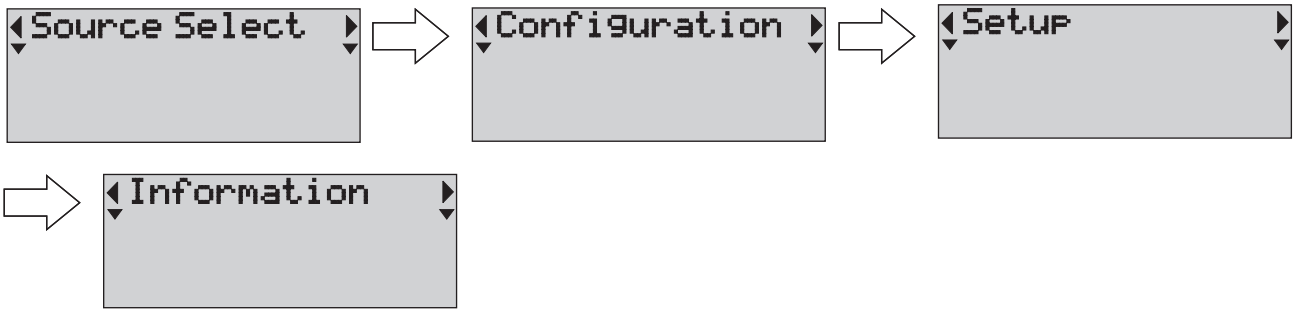

- Press the **SELECT** ▼ button or the **ENTER** button, to open one of the menus for example, the **Information menu**:

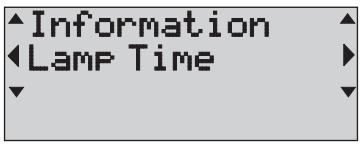

- Press the **SELECT** ▲ button or **CANCEL** button to close the menu

  OR press the **SELECT** ◄ or ► buttons to show the sub-menus available:

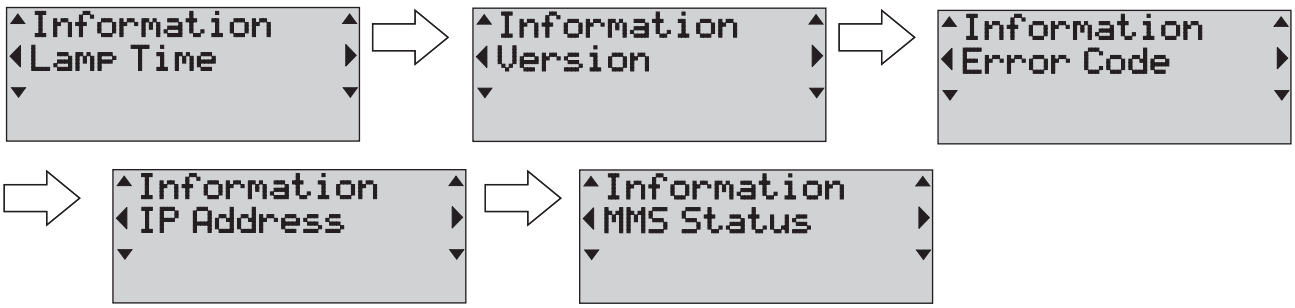

- Press the **SELECT** ▼ button or the **ENTER** button, to open one of the menus for example, the **Version menu**:

Notes

To return to the Main Menu at any time, press the **MENU** *button.*

For a full listing of all the menus, see **Menu trees**, *later in this section.*

- Press the **SELECT** ▲ button or **CANCEL** button to close the menu

  OR press the **SELECT** ◄ or ► buttons to show the sub-menus available:

- Press the **SELECT** ▼ button or the **ENTER** button, to open one of the menus for example, the **Firmware menu**:

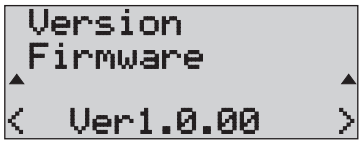

- This is the end of this menu branch.

  Press the **SELECT** ▲ button or the **CANCEL** button to close the menu and work your way back up the menu tree.

  OR press the **MENU** button to return to the **Main Menu**.

Example: Lens Calibration

- From the **Main menu**, select the **Configuration** menu.
- From the **Configuration menu**, select the **Installation** menu.
- From the **Installation menu**, select the **Lens Calibrate** menu.
- From the **Lens Calibrate menu**, select **Zoom or Fixed**.

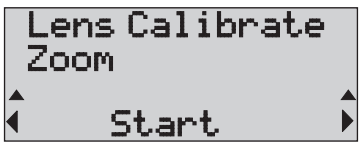

- Press the **SELECT** ▲ button or the **CANCEL** button to close the menu

  OR press the **ENTER** button to start, then again to confirm.

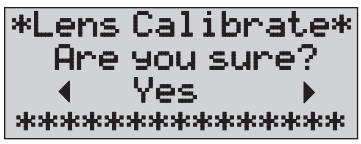

- If **Zoom** was selected, the projector will calibrate the lens, and initialise the lens memory. If **Fixed** was selected, then the zoom buttons will be disabled.
- Press the **SELECT** ▲ button or the **CANCEL** button to close the **Lens Calibrate** menu and work your way back up the menu tree.

  OR press the **MENU** button to return to the **Main Menu**.

Notes

☞ *To return to the Main Menu at any time, press the* **MENU** *button.*

☞ *For a full listing of all the menus, see* **Menu trees***, later in this section.*

☞ *Lens memory will be initialized when* ***Lens calibrate*** *is executed.*

Menu trees

The menus can be accessed from either the control panel or the remote control, using the menu selection buttons.

The **Main Menu** has four major sub-menus:

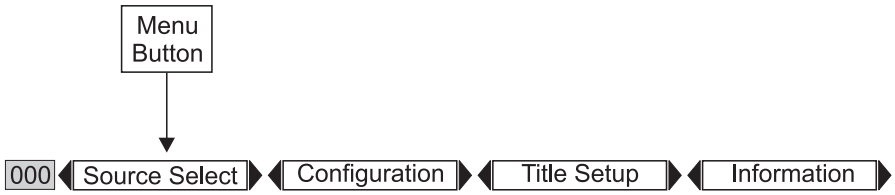

see page 9

The Source Select menus allow you to select from:

- up to 100 pre-defined titles
- a range of test patterns.

see pages 10 & 11

The Configuration menus allow you to carry out basic projector settings, such as:

- lamp setup
- shutter mode
- MMS control
- panel key lock
- GPIO control
- date, time and ON/OFF timer
- reset to factory defaults
- image orientation
- lens calibration and centering
- MCGD file creation
- test pattern setup
- turret control
- connection baud rate

see pages 12 & 13

The Title Setup menus allow you to carry out setup for up to 100 titles:

- edit titles
- make new titles
- delete titles
- create PCF and source files

and for each title, specify:

- signal port
- signal configuration
- PCF, MCGD and screen file selection

see page 14

The Information menus allow you to access to:

- lamp time
- BIOS, firmware and data versions
- error codes
- IP addresses for controlling the projector via a network
- MMS settings

Notes

*To see the first item of the **Main menu** , press the **MENU** button.*

*To navigate through the Menus and Sub-menus, use the **SELECT** ◄ ► ▲ ▼ **ENTER**, **CANCEL** and **UNDO** buttons, as shown in* **Using the menus***, earlier in this section.*

Some menus are marked with a number. To jump directly to those menus using the remote control:

1 Press the HELP ***Direct Menu selection** button.*

*2 Use the **Alpha-numeric keys** to enter the menu number, including any leading zeroes, eg 005.*

*3 Press **Enter**.*

Source Select menus

Notes

***Direct Menu selection**:*

*1 Press the HELP **Direct Menu selection** button.*

*2 Use the **Alpha-numeric keys** to enter the menu number, including any leading zeroes, eg 005.*

*3 Press **Enter**.*

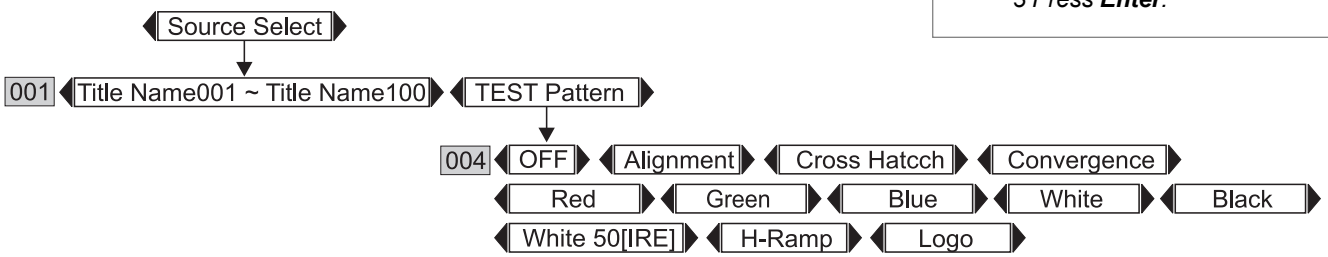

Configuration menus

Notes

***Direct Menu selection**:*

*1 Press the HELP **Direct Menu selection** button.*

*2 Use the **Alpha-numeric keys** to enter the menu number, including any leading zeroes, eg 005.*

*3 Press **Enter**.*

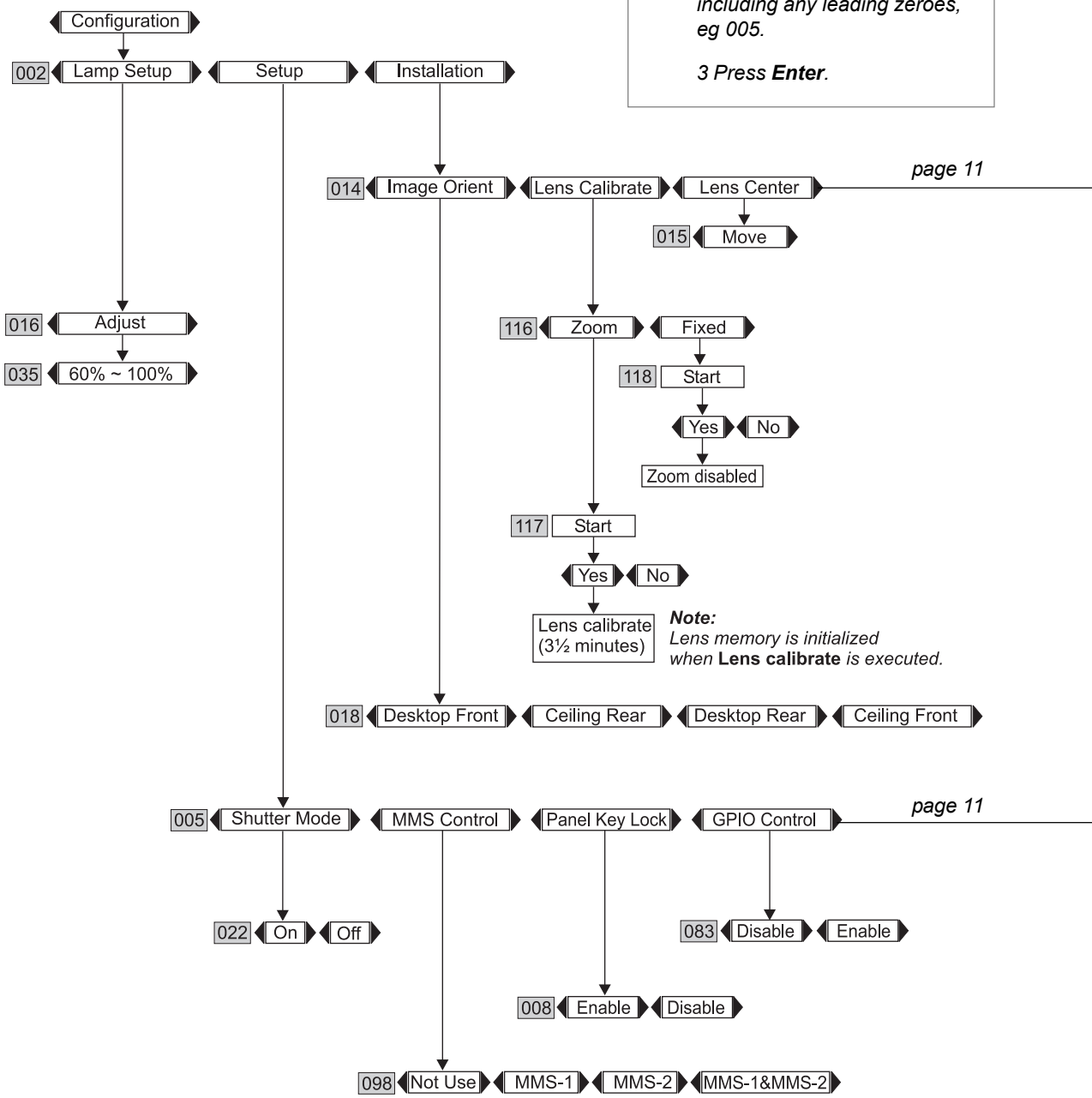

Configuration menus

continued

Notes

***Direct Menu selection**:*

*1 Press the HELP **Direct Menu selection** button.*

*2 Use the **Alpha-numeric keys** to enter the menu number, including any leading zeroes, eg 005.*

*3 Press **Enter**.*

page 10

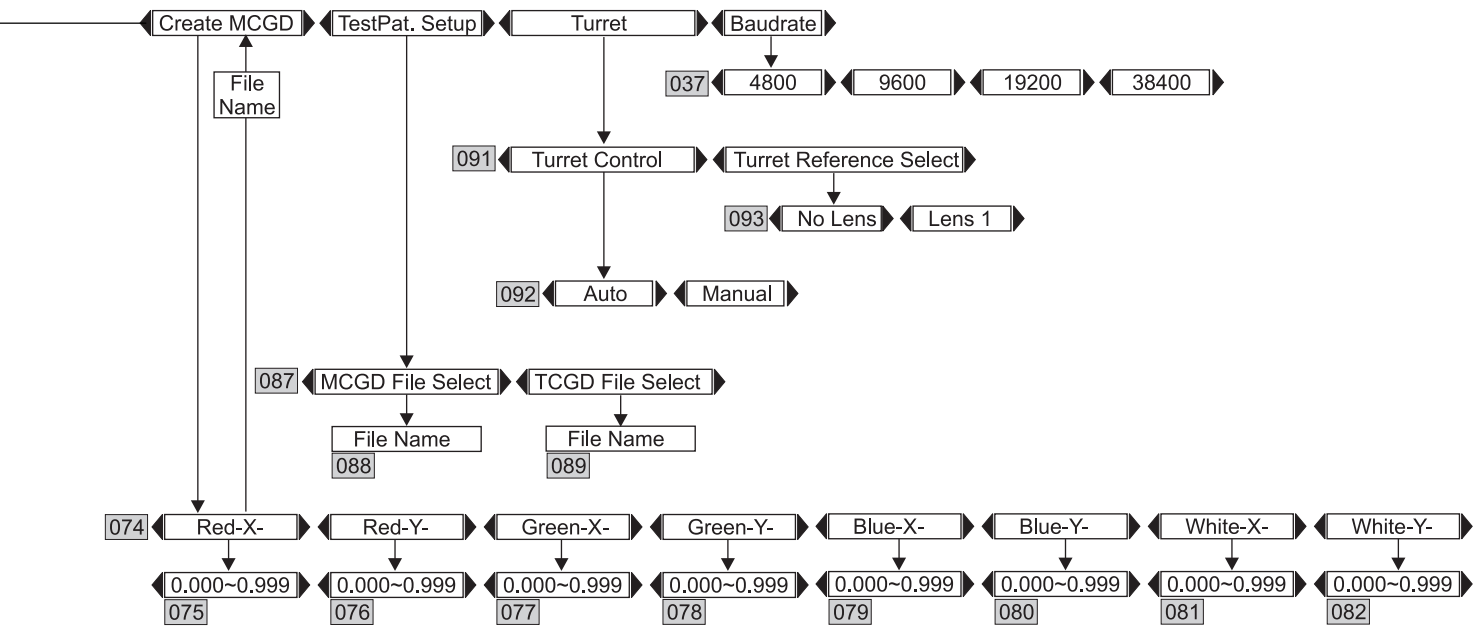

page 10

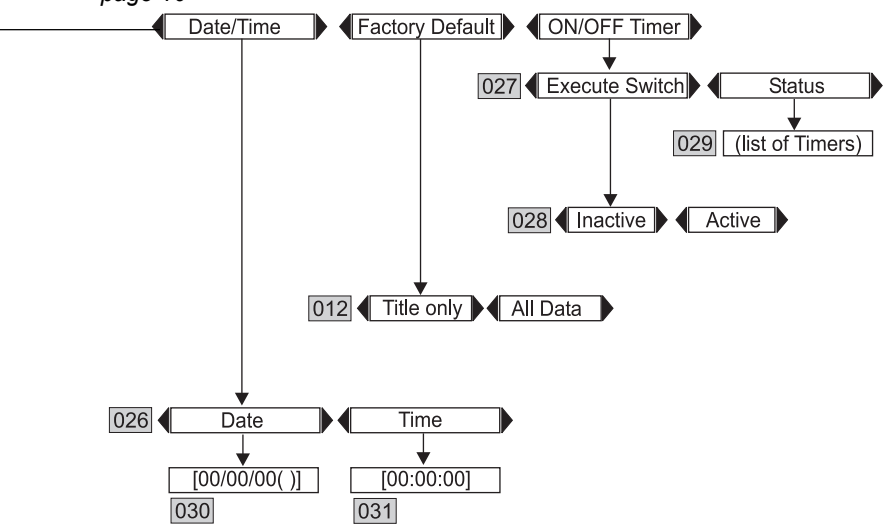

Title Setup menus

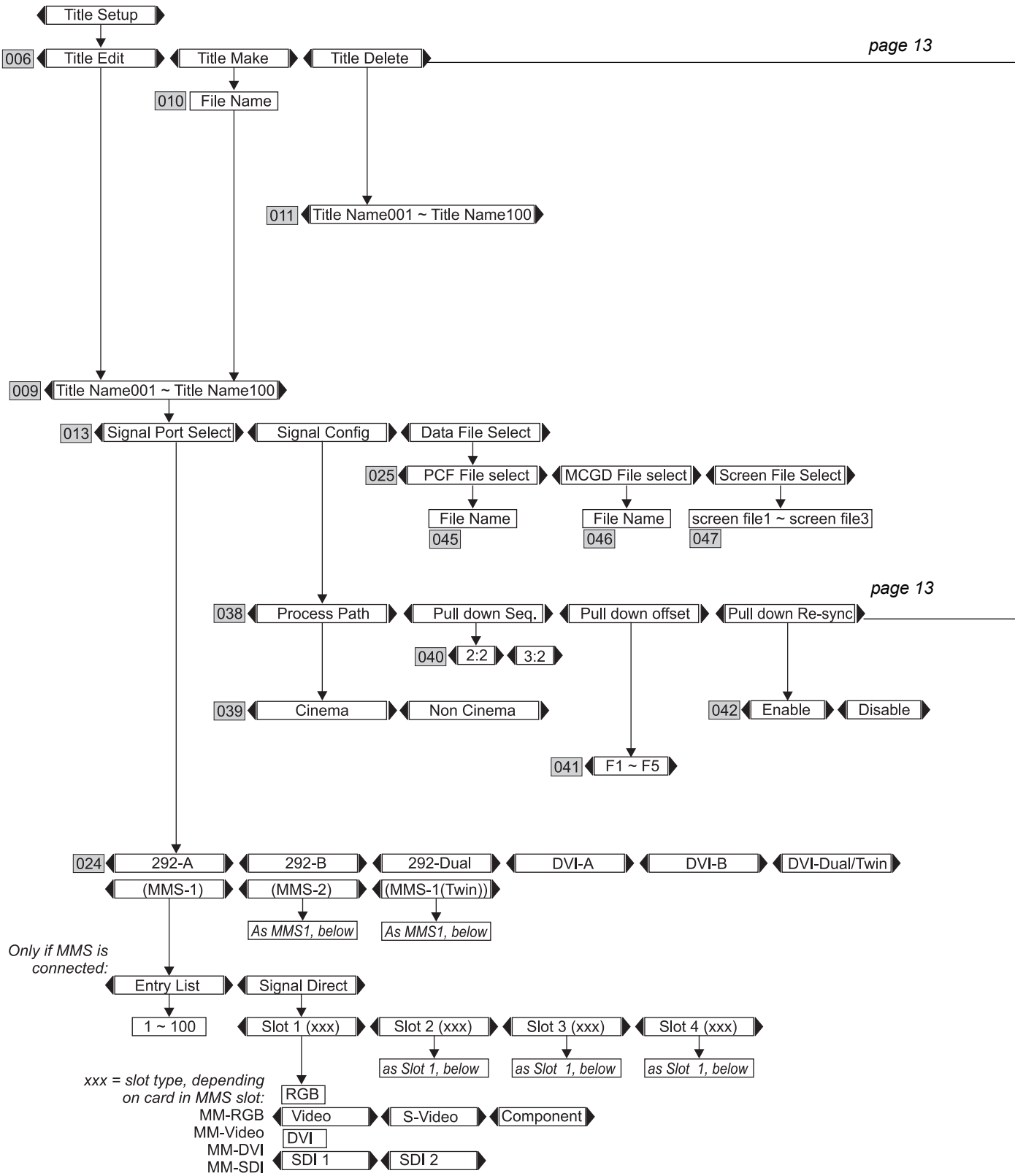

Title Setup menus

continued

Notes

***Direct Menu selection**:*

*1 Press the HELP **Direct Menu selection** button.*

*2 Use the **Alpha-numeric keys** to enter the menu number, including any leading zeroes, eg 005.*

*3 Press **Enter**.*

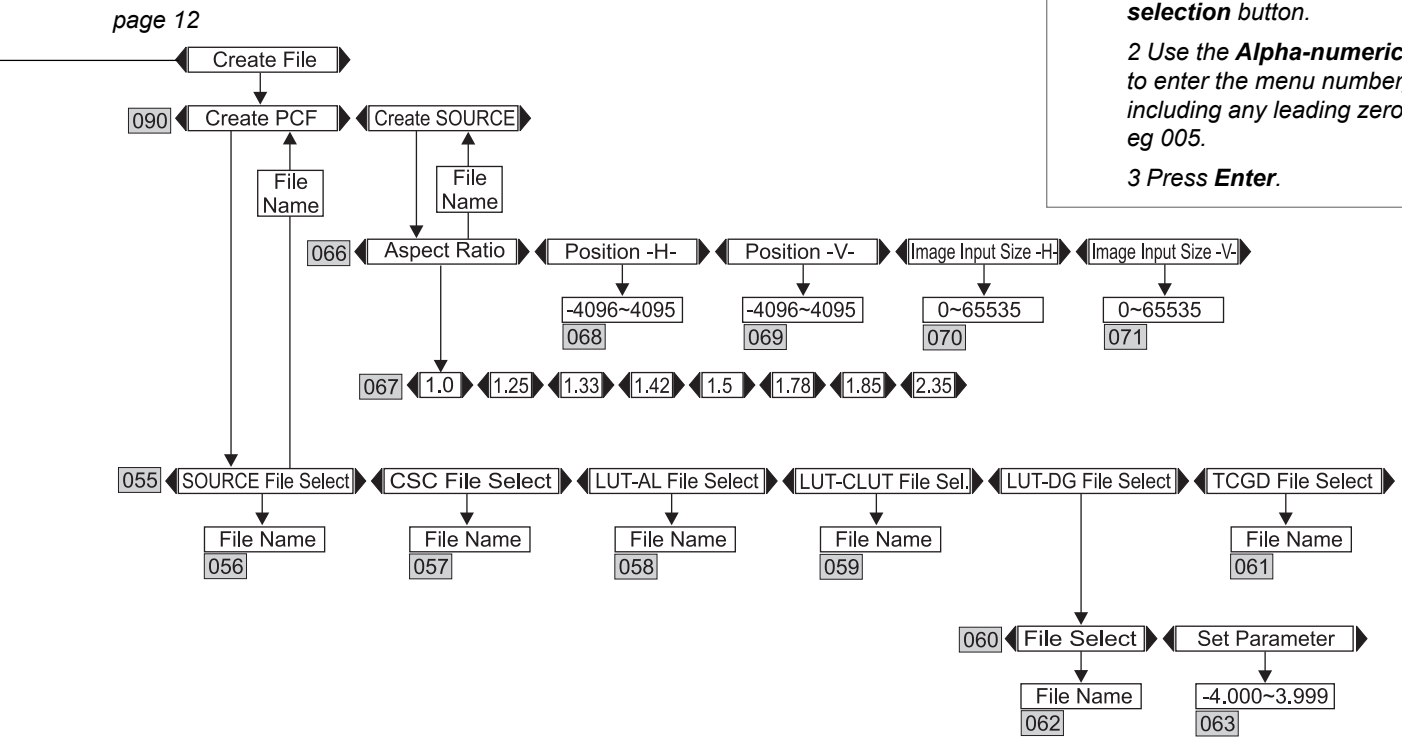

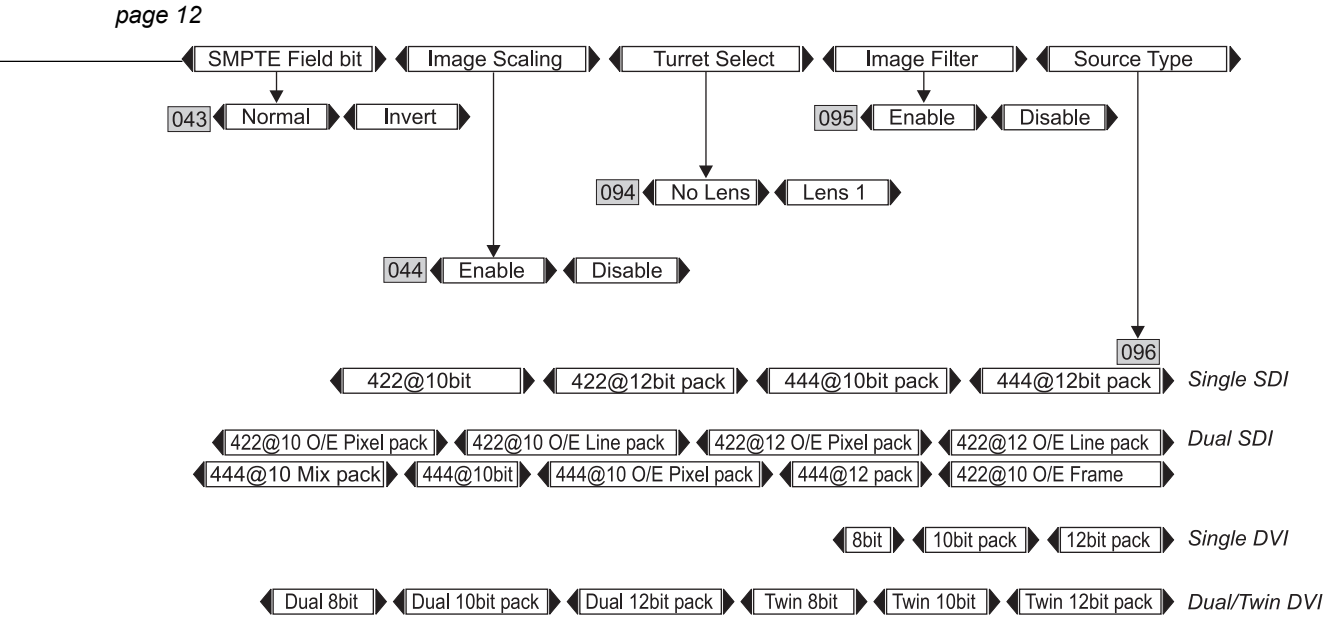

Information menus

Notes

***Direct Menu selection**:*

*1 Press the HELP **Direct Menu selection** button.*

*2 Use the **Alpha-numeric keys** to enter the menu number, including any leading zeroes, eg 005.*

*3 Press **Enter**.*

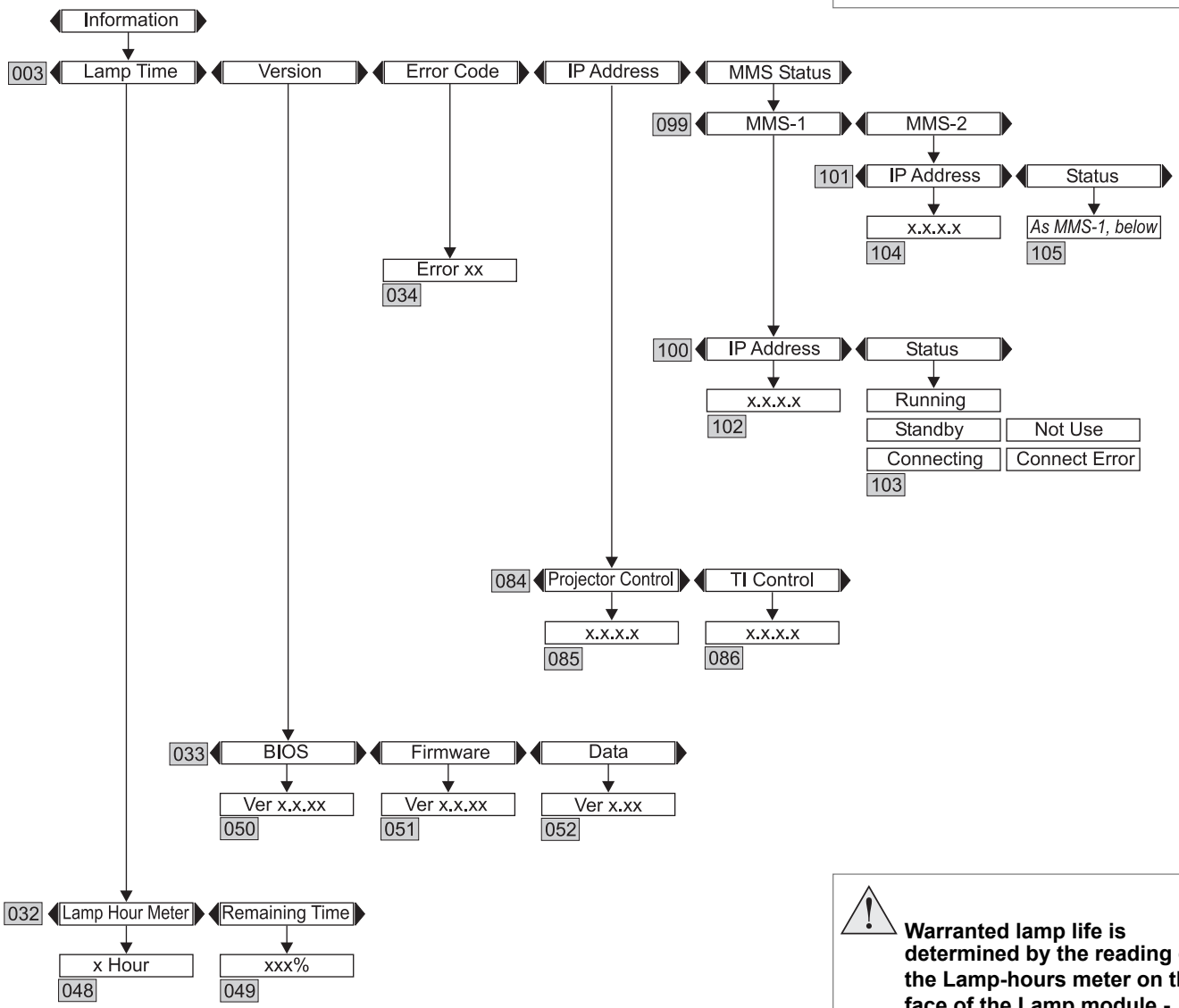

Warranted lamp life is determined by the reading on the Lamp-hours meter on the face of the Lamp module - NOT the reading available via the Lamp menu shown here.

5. Maintenance

Contents

Changing the air filter material 5.2
Changing the lamp 5.4
Lamp-hours meter 5.4
Cleaning the projector and lens 5.5

Changing the air filter material

To change the filter:

Switch the projector into **Standby mode**, by pressing the **POWER** button on the control panel or the **POWER OFF** button on the remote control for two seconds.

- The **ON/STANDBY** indicator on the control panel will change to orange, and flash on and off.

  The display will show the Cooldown timer, which will count down from 300 seconds to zero. At the end of the cooling period, the projector will go into **Standby mode**.

- Push the main power switch downwards to switch off the power.
- Pull the filter out from under the front of the projector, under the lens, by pulling on the strap.

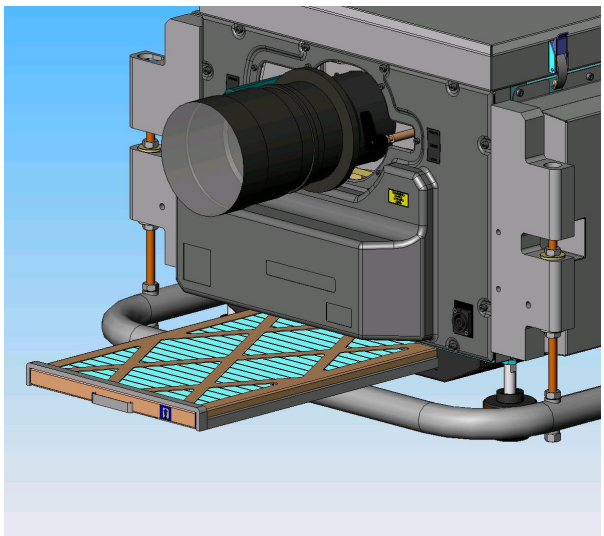

- Inspect the foam sealing strips at the ends and sides of the filter. If they are damaged, then the whole filter should be replaced.
- Dismantle the filter:

  - Remove the two screws securing the strap-end of the frame.
  - HInge up the top of the frame and unhook from the bottom end.
  - Remove the filter material.

Notes

The projector must be switched OFF before removing the air filter, otherwise dust could be sucked into the projector by the ventilation fan.

The filter material should be changed regularly:

- *In a clean environment such as a projection room, change after 750 hours, at the same time as the lamp is changed.*
- *In a dusty or smoky environment such as a theatre or public area, more frequent changes may be necessary.*

- Replenish the filter, taking care to fit the new material correctly, as shown below:

  - the cut edge of the wire lattice must be against the sealing strip,
  - the wire lattice must face downwards,
  - the first pleat of material must overhang the strap-end of the frame.

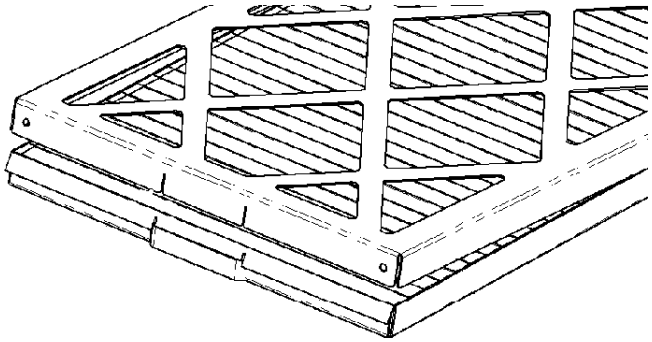

- Re-assemble the frame:

  - Hook the bottom end on first.
  - Re-fasten the two screws at the strap end.

- Push the replenished filter firmly back into the slot, taking care to fit it the right way up, as shown by the arrow.

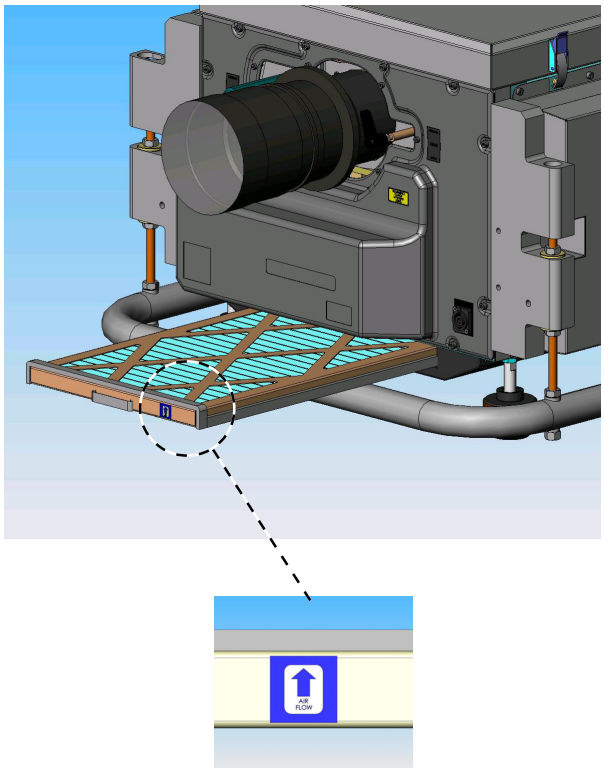

Notes

Changing the lamp

The lamp should be changed, by certified service personnel, after 750 hours of use, as indicated on the lamp-hours meter. The meter is located on the front of the lamp module, and is accesible inside the lamp compartment door.

Lamp-hours meter

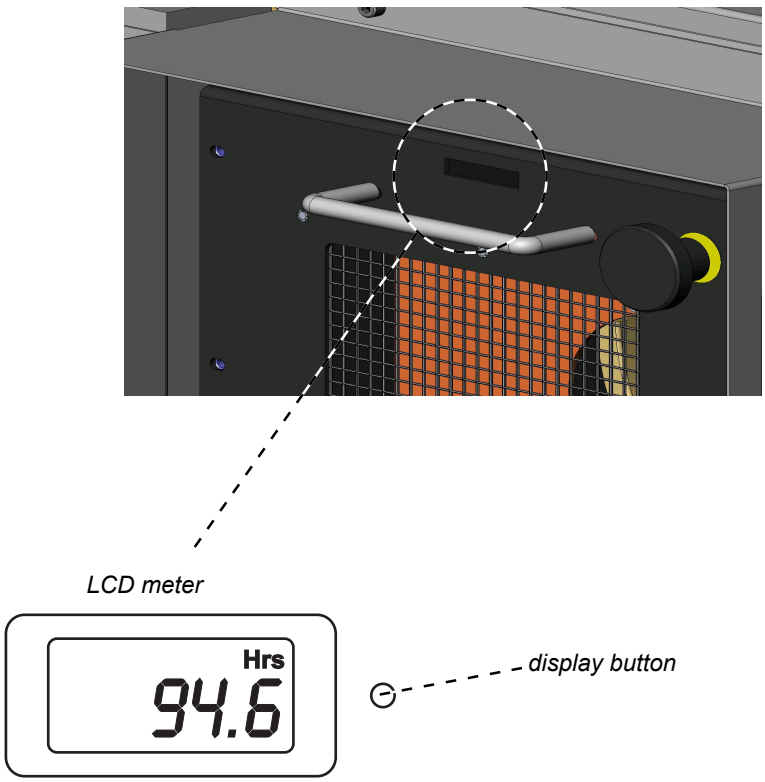

The Lamp-hours meter has two modes of operation:

- When the projector is running, the LCD will show lamp run hours.
- When the projector is in Standby mode, the LCD will be blank. To display lamp run hours press the button and hold for 5 seconds.

Notes

The lamp should be changed ONLY by certified service personnel.

Always allow the lamp to cool for 5 minutes before removing the lamp module.

Do NOT open the lamp compartment door whilst a film is being shown - safety interlocks on the door will shut down the projector without warning.

Do not use the lamp for more than 750 hours, as this may cause serious lamp failure, damage the lamp module and cause extra cost on replacement.

Warranted lamp life is determined by the reading on the Lamp-hours meter on the face of the Lamp module, shown here - NOT the reading available via the Information menus.

There are no user-serviceable parts inside the lamp module. The whole module should be replaced and returned to your provider for re-furbishment.

Xenon lamps produce high intensity light. Do not look directly at the light coming from the lamp housing or the lens.

Cleaning the projector and lens

Turn the projector off before cleaning:

- Switch the projector into **Standby mode**, by pressing the **POWER** button on the control panel or the **POWER OFF** button on the remote control for two seconds.
- The **ON/STANDBY** indicator on the control panel will change to orange, and flash on and off.

  The display will show the Cooldown timer, which will count down from 300 seconds to zero. At the end of the cooling period, the projector will go into **Standby mode**.
- Push the main power switch downwards to switch off the power.
- Disconnect the power cable.

Clean the cabinet periodically with a damp cloth. If heavily soiled, use a mild detergent.

Use a blower or lens paper to clean the lens, taking care not to scratch the glass.

Notes

Never use strong detergents or solvents such as alcohol or thinners to clean the projector and lens.

6. Appendix

Contents

Troubleshooting **6.2**
Specifications **6.4**
- **Part numbers** **6.4**
- **Optical** **6.5**
- **Physical** **6.5**
- **Electrical** **6.5**
- **Control Inputs** **6.5**
- **Cinema Inputs** **6.6**
- **DVI-D Inputs** **6.8**
- **Projection lens data** **6.9**

Connections **6.10**
- **Cinema Input (SMPTE 292 / HD-SDI) connection** **6.10**
- **DVI-D Input connection** **6.11**
- **LAN connection** **6.12**
  - *10BaseT Unshielded Twisted Pair cable* *6.12*
- **Serial control input** **6.13**
  - *Null-modem cable* *6.13*
  - *Modem settings* *6.13*
- **Remote Control 2** **6.14**
- **General Purpose Input/Output (GPIO)** **6.15**

Dimensions **6.16**
- **without anamorphic lens** **6.16**

Dimensions **6.17**
- **with anamorphic lens fitted** **6.17**

Troubleshooting

Problem	*Possible solutions*
The projector will not power up.	Check that the mains plug is plugged in and that the mains supply is switched on. Check any external fuses or breakers.
The projector shuts down after it has been in use for some time.	The projector may be overheating. Check that the air inlets and outlets are clear of any obstruction. Check that the air filter is clean, and if it is dirty, fit a new one. See **Section 1. Introduction, Getting to know the projector**
The amber I/L indicator is lit.	The projector has shut down for one of the following reasons: - The lamp compartment door is open, - There is insufficient air flow to cool the lamp, - The projector is overheating. - Some other error - see LCD screen for error code, and contact your supplier.
The red I/L indicator is lit.	The theatre safety system has shut down the projector. or The EXT I/L connection has become disconnected.
The lamp is not lit.	Check the lamp-hours meter. If the lamp has been in use for over 750 hours, the lamp module should be changed. See **Section 5. Maintenance, Changing the lamp** The lamp may be faulty. Check by fitting a new lamp module. See **Section 5. Maintenance, Changing the lamp** The lamp power may be turned down. See **Section 4. Using the menus, Setup menu**
The lamp is lit but no image is displayed.	Check that the input source is switched on and connected to the projector correctly. Check that the correct image source is selected. See **Section 4. Using the menus, Source Select menu** Check that the shutter is open and the image settings are set correctly. See **Section 4. Using the menus, Setup menu** The projector may be overheating. Check that the air inlets and outlets are clear of any obstruction. Check that the air filter is clean, and if it is dirty, fit a new one.

Always allow the lamp to cool for 5 minutes before switching off the power, moving the projector or changing the lamp. If, as a result of an extreme mains supply variation, the projector goes into Standby mode during normal operation, allow the lamp to cool for at least 15 minutes before moving the projector. Alternatively, switch the projector ON to restart the cooling fan, then switch into Standby mode and wait for 5 minutes.

Problem	*Possible solutions*
The image does not fit the screen correctly.	If the image is smaller than 2048 x 1080 pixels, then the image will NOT fill the screen. The projector does not perform any image processing - the MMS 1000 is recommended for this purpose. Check that the correct lens is being used for the combination of screen size and projection distance. See **Section 1. Introduction, Choosing a lens** Check the image settings are set correctly. See **Section 4. Using the menus, Setup menu**
Uneven image quality.	Check that the projector is parallel to the screen. Check that the screen is flat, and securely mounted.
Projector does not respond to remote control commands from a computer.	Check that the LAN or serial cable is connected correctly. See **this section 6. Appendix, Connections** If using a LAN, check that the address setting is made correctly. See **Section 4. Using the menus, Configuration menu** If using a serial cable, check that the modem settings are made correctly. See **this section 6. Appendix, Connections**
	In the event that this troubleshooting guide has not solved the problem, then contact your provider or service centre.

Specifications

Part numbers

Projector

USA model	102-566	**or**	01164028
Rest of World model	102-859	**or**	01164029

Accessories (included in box)

Power cable USA version	LA00098	**or**	
Power cable Rest of World version	LA00097		
DVI-D to DVI-D cable 2m	LA00205	**or**	73893286
Remote control			7N900122
Remote control cable 2m	---		7N520019
Remote control cable 16m	---		73499217
PC adapter card	---		79646181
Memory card	---		7N960191
Dummy PC adaptor card	---		24FT8871
Ferrite-core clamps	61605095		
This User Manual (CD-ROM)	104-597		
Important Information (printed)	104-598		

Options

Motorised Anamorphic Lens mount *iS15AT* *(with associated Title memory for screen set-ups)*	103-548	**or**	01165081
Lamp duct box *iS15DA*	104-167		01165084
Lamp bulb 3kW (without module) *iS15LP*	103-239	**or**	01165080

Replacement parts

Lamp module 3kW *iS15LH*	104-577	**or**	01165079
Air filter material *iS15AF*	103-609B	**or**	01165086

Lenses

1.45 - 1.8:1 (40.7-50.9mm) *L2K-14ZG*	102-933	**or**	01165056
1.8 - 2.4:1 (50.7-67.8mm) *L2K-18ZG*	102-934	**or**	01165057
2.2 - 3.0:1 (62.4-84.8mm) *L2K-22ZG*	102-935	**or**	01165058
3.0 - 4.3:1 (84.8-125mm) *L2K-30ZG*	102-936	**or**	01165059
x1.25 Anamorphic lens	102-130	**or**	01165077

Optical

Digital Light Processor	3 x 1.26” Texas Instruments DMD™, resolution 2048 x 1080 pixels
Lamp power	3kW
Lamp life (typical)	750 hours
Brightness	12,000 ANSI lumens (±10%) for screens up to 50ft (15m) wide
Colour gamut	Meets or exceed TI Cinema guidelines
Contrast ratio	Meets or exceed TI Cinema guidelines
Pixel fill factor	87%

Physical

Operating Temperature	10 to 35°C
Storage Temperature	-10 to 50°C
Thermal Dissipation	13640 BTU
Operating Humidity	up to 80% non-condensing
Weight	114kg (249lbs)

Electrical

Mains voltage	200-240 VAC (±10%), 48-62Hz (single phase)
Power consumption	4000 W
International Regulations	Meets FCC Class A requirements Meets EMC Directives (EN 50081-1, EN 50082-1, EN 55022) Meets Low Voltage Directive (EN60950)

Control Inputs

2 x LAN

1 x RS232 serial

Cinema Inputs

2 x SMPTE 292 / HD-SDI single or

1 x SMPTE 292 / HD-SDI dual

Maximum rates:

Port Protocol	*Source Format*	*# of Bits*	*Maximum Input Rate*	*Scan Type*	*Color Format*	*Processing Path (1)*	*Display Format*
				Dual SMPTE 292			
SMPTE 292	1920 x 1080	10	35.55 Hz	Progressive	4:2:2	DLP Cinema™	2048 x 1080
SMPTE 292	2048 x 1080	10	33.34 Hz	Progressive	4:2:2	DLP Cinema™	2048 x 1080
SMPTE 292	1920 x 1080	10	23.75 Hz (2)	Progressive	4:4:4	Standard DLP™	2048 x 1080
SMPTE 292	2048 x 1080	10	22.27 Hz (2)	Progressive	4:4:4	Standard DLP™	2048 x 1080
				Dual SMPTE 292			
SMPTE 292	1920 x 1080	10	48.78 Hz	Progressive	4:2:2	DLP Cinema™	2048 x 1080
SMPTE 292	2048 x 1080	10	48.78 Hz	Progressive	4:2:2	DLP Cinema™	2048 x 1080
SMPTE 292	1920 x 1080	10	47.45 Hz	Progressive	4:4:4	Standard DLP™	2048 x 1080
SMPTE 292	2048 x 1080	10	44.50 Hz	Progressive	4:4:4	Standard DLP™	2048 x 1080

Note 1: Processing path selectable via software.

Note 2: Can be displayed at twice this rate

Some single SMPTE 292 source formats that will be auto-detected and displayed:

Source Standard	*Source Format*	*Source Vertical Rate (Hz)*	*Scan Type*	*Display Vertical Rate Hz*
SMPTE 274M	1920 x 1080	24 / 23.98	Progressive	24 / 23.97 Hz; Progressive
	1920 x 1080	25	Progressive	25 Hz; Progressive
	1920 x 1080	30 / 29.97	Progressive	30 / 29.97 Hz; Progressive
	1920 x 1080	50	Interlaced (1)	25 Hz; Progressive
	1920 x 1080	60 / 59.94	Interlaced (2)	24 / 23.97 Hz; Progressive
SMPTE RP 211 (3)	1920 x 1080	24 / 23.98	Segmented Frame	24 / 23.97 Hz; Progressive
	1920 x 1080	25	Segmented Frame	25 Hz; Progressive
	1920 x 1080	30 / 29.97	Segmented Frame	30 / 29.97 Hz; Progressive
SMPTE 295M	1920 x 1080	50	Interlaced (1)	25 Hz; Progressive
SMPTE 260M	1920 x 1035	60 / 59.94	Interlaced (2)	24 / 23.97 Hz; Progressive
SMPTE 296M	1280 x 720	60 / 59.94	Progressive	60 / 59.94 Hz; Progressive
Other	1280 x 1024	48 / 47.95	Progressive	48 / 47.95 Hz; Progressive
	1280 x 720	72	Progressive	72 Hz; Progressive

Note 1: Requires source to be encoded with 2:2 Pull-Down, and assumes field one (1) dominance

Note 2: Requires source to be encoded with 3:2 Pull-Down, and requires time code information

Note 3: Proposed SMPTE standard

Some dual SMPTE 292 source formats that will be auto-detected and displayed:

Example Vertical Rates (Hz)	*Maximum Active Pixels / Frame (1) (2)*	*Examples (2) (Active : Active + overhead)*	*Aspect Ratio*
24 / 23.97	3,437,500	2662 x 1024 : (2,767,376)	2.6:1
		2048 x 1106 : (2,306,580)	1.85:1
		1920 x 1080 : (2,113,800)	1.78:1
25	3,300,000	2662 x 1024 : (2,767,376)	2.6:1
		2048 x 1106 : (2,306,580)	1.85:1
		1920 x 1080 : (2,113,800)	1.78:1
30 / 29.97	2,750,000	2048 x 1106 : (2,306,580)	1.85:1
		1920 x 1080 : (2,113,800)	1.78:1
36	2,291,667	1920 x 1080 : (2,113,800)	1.78:1
48 / 47.95	1,718,750	1280 x 1024 : (1,346,680)	1.25:1
50	1,650,000	1280 x 1024 : (1,346,680)	1.25:1
60 / 59.94	1,375,000	1280 x 1024 : (1,346,680)	1.25:1
72	1,145,833	1280 x 720 : (943,200)	1.78:1

Note : If the maximum number of active pixels is exceeded, the electronics will truncate the excess data. There may be image artifacts where this data truncation occurs.

Note : For all dual channel configurations, the two channels must be synchronized to be within 215ns.

Note 1: Max Active Pixels per Frame = 82.5 x 10^6 / Vertical Rate.

Note 2: The Maximum Active Pixels/Frame must include an overhead which is the greater of 30 clocks per line at 82.5Mhz OR 27 clocks per line at the input clock rate AND 4 lines per field/frame.

DVI-D Inputs

2 x DVI-D single or

1 x DVI-D twin

DVI supported and E-EDID reported source formats

Port Protocol	*Source Format*	*Vertical Rate*	*Clock Rate (max)*	*Scan Type*	*Color Space*
DDWG DVI	640 x 480	60 Hz	25.175 MHz	Progressive	RGB
DDWG DVI	640 x 480	72 Hz	31.500 MHz	Progressive	RGB
DDWG DVI	800 x 600	60 Hz	40 MHz	Progressive	RGB
DDWG DVI	800 x 600	72 Hz	50 MHz	Progressive	RGB
DDWG DVI	1024 x 768	60 Hz	65 MHz	Progressive	RGB
DDWG DVI	1024 x 768	70 Hz	75 MHz	Progressive	RGB
DDWG DVI	1280 x 1024 (2)	50 Hz	89.970 MHz	Progressive	RGB
DDWG DVI	1280 x 1024	60 Hz	108 MHz	Progressive	RGB
DDWG DVI	1920 x 1080 (3)	60 Hz	138.5 MHz	Progressive	RGB
DDWG DVI	2048 x 1080 (3)	60 Hz	122 MHz	Progressive	RGB

Note : For all twin configurations, the two channels must be synchronized to be within 215ns.

Note 1: VESA standard compliant

Note 2: Timing is extrapolated from VESA standard timing

Note 3: Listed under Detailed Timing. Native for DC2K based systems.

Format for Generic Inputs to DVI-D Port – Series 0

Port Protocol	*Source Format*	*Vertical Rate*	*Clock Rate (max)*	*Scan Type*	*Color Space*	*Processing Path (1)*	*Display Format*
DDWG DVI	1280 x 1024	23 – 61 Hz	82.5 Mhz	Progressive	RGB	DLP Cinema™	1280 x 1024
DDWG DVI	1280 x 1024	23 – 96 Hz	165 Mhz	Progressive	RGB	Standard DLP ™	1280 x 1024

Note 1: Processing path selectable via software.

Format for Generic Inputs to DVI-D Port – Series 1

Port Protocol	*Source Format*	*# of Bits*	*Vertical Rate*	*Scan Type*	*Color Space*	*Processing Path (1)*	*Display Format*
			Single Link DVI				
DDWG DVI	1920 x 1080	10	23 – 48 Hz	Progressive	RGB	DLP Cinema™	2048 x 1080
DDWG DVI	2048 x 1080	10	23 – 48 Hz	Progressive	RGB	DLP Cinema™	2048 x 1080
DDWG DVI	1920 x 1080	10	23 – 62 Hz	Progressive	RGB	Standard DLP™	1920 x 1080
DDWG DVI	2048 x 1080	10	23 – 58 Hz	Progressive	RGB	Standard DLP™	2048 x 1080
			Twin Link DVI				
DDWG DVI	1920 x 1080	10	23 – 48 Hz	Progressive	RGB	DLP Cinema™	2048 x 1080
DDWG DVI	2048 x 1080	10	23 – 48 Hz	Progressive	RGB	DLP Cinema™	2048 x 1080
DDWG DVI	1920 x 1080	10	23 – 77 Hz	Progressive	RGB	Standard DLP™	1920 x 1080
DDWG DVI	2048 x 1080	10	23 – 72 Hz	Progressive	RGB	Standard DLP™	2048 x 1080

Note 1: Processing path selectable via software.

Projection lens data

	L2K-14ZG	L2K-18ZG	L2K-22ZG	L2K-30ZG
part numbers	102-933 01165056	102-934 01165057	102-935 01165058	102-936 01165059
throw ratio	**1.45 - 1.8 :1 zoom**	**1.8 - 2.4 :1 zoom**	**2.2 - 3.0 :1 zoom**	**3.0 - 4.3 :1 zoom**
full DMD image width	3 - 25m (9 - 82ft)	2 - 19m (7 - 62ft)	2 - 15m (5 - 49ft)	1 - 11m (4 - 34ft)
throw distance	5 - 45m (16 - 148ft)	5 - 45m (16 - 148ft)	2.2m - 6.9m (7.4 - 22.6ft)	5 - 45m (16 - 148ft)
lens shift vertical	± 282	± 282	± 282	± 282
(vs DMD height)	± 0.26H	± 0.26H	± 0.26H	± 0.26H
lens shift horizontal	± 172	± 172	± 172	± 172
(vs DMD width)	± 0.085W	± 0.085W	± 0.085W	± 0.085W
Aperture	F/2.5	F/2.5	F/2.5	F/2.5
Max object field size	36.0mm dia	36.0mm dia	36.0mm dia	36.0mm dia
Effective focal length	40.71 - 50.89mm ((1.6 - 2.0in)	50.72 - 62.12mm (2 - 2.5in)	62.35 - 84.79mm (2.46 - 3.34in)	84.0 - 120.5mm (3.31 - 4.74in)
Distortion	<1.5%	<1.5%	<1.5%	<1.5%
Transmission	>88% avg	>88%	>88% avg	>88% avg

Mechanical

*Lens extension**	109mm (4.3in)	97mm (3.8in)	53mm (2.1in)	98mm (3.9in)
Length	381mm (15in)	368.4mm (14.5in)	324.9mm (12.8in)	370.8mm (14.6in)
Maximum diameter	139mm 5.47in)	139mm (5.47in)	139mm (5.47in)	139mm (5.47in)

* Lens extension is the distance from the outer end of the lens to the front of the projector. It is measured when the lens is focussed at infinity and fully extended. At other focus settings, the extension could be up to 10mm less.

It is important for calculating throw distance accurately (see ***Useful lens calculations***, in ***Section 2. Installation***).

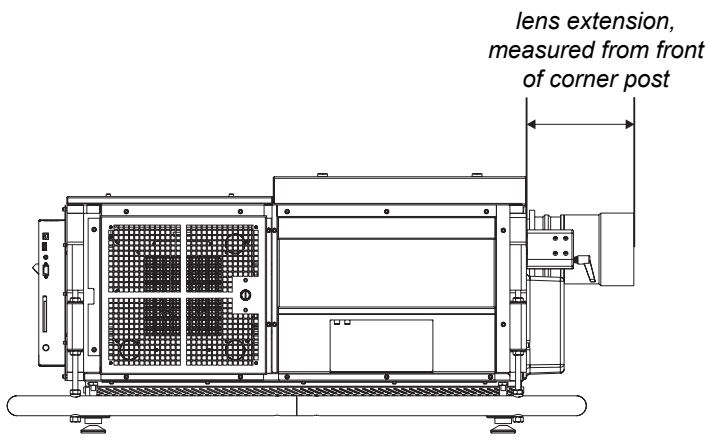

Connections

Cinema Input (SMPTE 292 / HD-SDI) connection

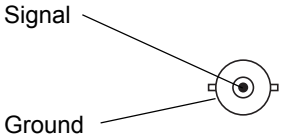

SMPTE 292 / HD-SDI signals are very high speed digital signals which require better quality coaxial cable than conventional analogue video. The data rate is 1.5 Gigabits per second.

In choosing cable length and connectors for any installation the frequency response loss in decibels should be proportional to 1√f, from 1MHz, to 1.5GHz. The following or similar cable specification should be used to ensure fault free communication between source and projector.

- Belden 8281 or equivalent with 75ohm BNC

Notes

For more information about supported input formats see **Specification***, earlier in this section.*

For more information about connecting the projector, see **Connecting the projector***, in* **2. Installation**.

DVI-D Input connection

1	TMDS Data 2-
2	TMDS Data 2+
3	TMDS Data 2 Shield
4	unused
5	unused
6	DDC Clock
7	DDC Data
8	unused
9	TMDS Data 1-
10	TMDS Data 1+
11	TMDS Data 1 Shield
12	unused
13	unused
14	+5 V Power
15	Ground
16	Hot Plug Detect*
17	TMDS Data 0-
18	TMDS Data 0+
19	TMDS Data 0 Shield
20	unused
21	unused
22	TMDS Clock Shield
23	TMDS Clock+
24	TMDS Clock-

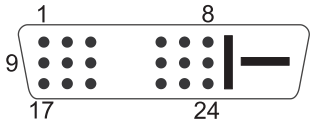

pin view of female connector

* Hot plug detect (HPD) is fully DVI compliant. DVI sources detect the presence of a display device by providing +5V on pin 14 and looking for +5V on pin 16. Whenever the projector is operational, and 5V is present on pin 14, pin 16 will be held at +5V.

EDID is available even when the projector is switched off.

Operational means that the projector is powered up. Non operational states are powered down and some self test and reprogramming modes.

Notes

For more information about supported input formats see **Specification***, earlier in this section.*

For more information about connecting the projector, including examples of DVI input configurations, see **Connecting the projector***, in* **2. Installation**.

Cable complexity and interference can be reduced by using the **Digilink** *high bandwidth optical connection system. Contact your dealer for more information.*

LAN connection

10BaseT Unshielded Twisted Pair cable

The standard wire colours as as follows:

1 White / Orange stripe
2 Orange
3 White / Green stripe
4 Blue
5 White / Blue stripe
6 Green
7 White / Brown stripe
8 Brown

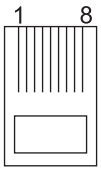

top view of cable connector (clip is underneath)

Notes

For more information about connecting the projector, including examples of control input configurations, see **Connecting the projector**, *in* **2. Installation**.

As this projector incorporates a builit -in hub, only a standard, uncrossed cable should be used to connect to an external hub, network or computer.

Serial control input

1	unused
2	Received Data
3	Transmitted Data
4	Data Terminal Ready
5	Signal Ground
6	Data Set Ready
7	Request To Send
8	Clear To Send
9	unused at present

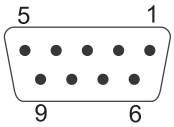

pin view of female connector

Null-modem cable

(used to connect the projector to a computer)

RD	2	---	3	TD
TD	3	---	2	RD
DTR	4	---	6	DSR
GND	5	---	5	GND
DSR	6	---	4	DTR
RTS	7	---	8	CTS
CTS	8	---	7	RTS

Modem settings

- Baud rate 38,400 bps
- Data length 8 bits
- Parity none
- Stop bits one
- Handshaking Full duplex RTS/CTS
  Xon/Xoff not supported

Notes

For more information about connecting the projector, see **Connecting the projector**, *in* **2. Installation**.

The projector is a DTE, so use:

- *a straight cable to connect to a modem, or*
- *a null-modem cable as shown here to connect to another DTE such as a computer.*

Remote Control 2

6-4	short	external control mode ON
6	open	external control mode OFF
3-4	short	power ON
3	open	power OFF
8-4	short	shutter CLOSED
8	open	shutter OPEN

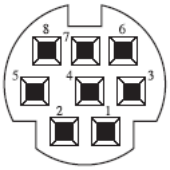

pin view of female connector

When GPIO control is enabled, the remote shutter control on pin 8 will not work.

Notes

For more information about connecting the projector, see **Connecting the projector**, *in* **2. Installation**.

General Purpose Input/Output (GPIO)

37 way D-Connector

1	Ext_GPIN_1_P	20	Ext_GPIN_1_N
2	Ext_GPIN_2_P	21	Ext_GPIN_2_N
3	Ext_GPIN_3_P	22	Ext_GPIN_3_N
4	Ext_GPIN_4_P	23	Ext_GPIN_4_N
5	Ext_GPIN_5_P	24	Ext_GPIN_5_N
6	Ext_GPIN_6_P	25	Ext_GPIN_6_N
7	Ext_GPIN_7_P	26	Ext_GPIN_7_N
8	Ext_GPIN_8_P	27	Ext_GPIN_8_N
9	Ext_GPOUT_1_P	28	Ext_GPOUT_1_N
10	Ext_GPOUT_2_P	29	Ext_GPOUT_2_N
11	Ext_GPOUT_3_P	30	Ext_GPOUT_3_N
12	Ext_GPOUT_4_P	31	Ext_GPOUT_4_N
13	Ext_GPOUT_5_P	32	Ext_GPOUT_5_N
14	Ext_GPOUT_6_P	33	Ext_GPOUT_6_N
15	Ext_GPOUT_7_P	34	Ext_GPOUT_7_N
16	Ext_PROJ_GOOD_P	35	Ext_PROJ_GOOD_N
17	N/C	36	N/C
18	Ext_TCODE_P	37	Ext_TCODE_N
19	Ext_TCODE_SHIELD		

Notes

For more information about connecting the projector, see **Connecting the projector**, *in* **2. Installation**.

GPI	Reccomended Operating Current	5mA
	Absolute Maximum Current	50mA
	Forward Voltage drop @ 5mA	1.1V

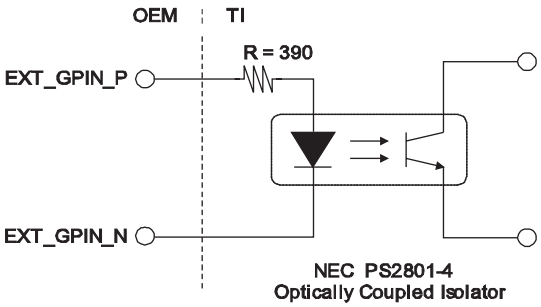

GPO	Absolute Maximum Current	50mA

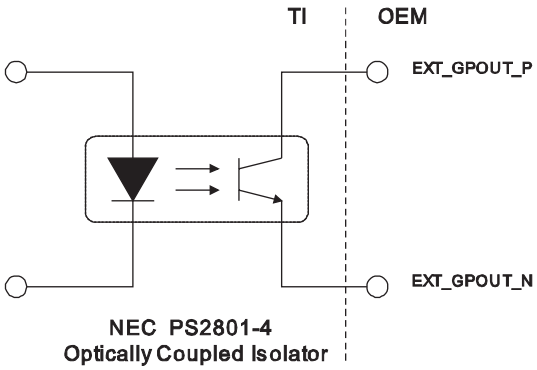

Dimensions

without anamorphic lens

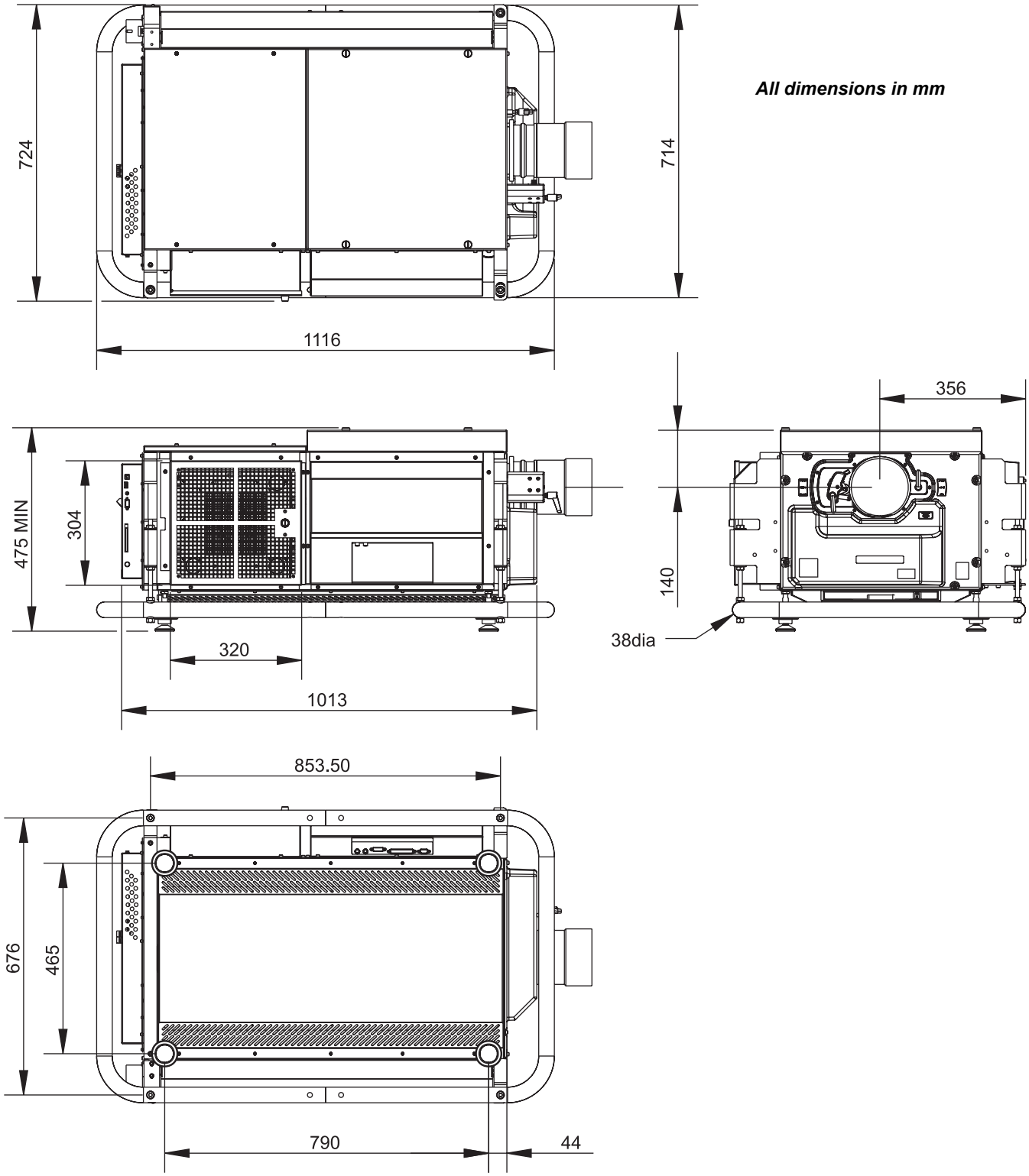

Dimensions
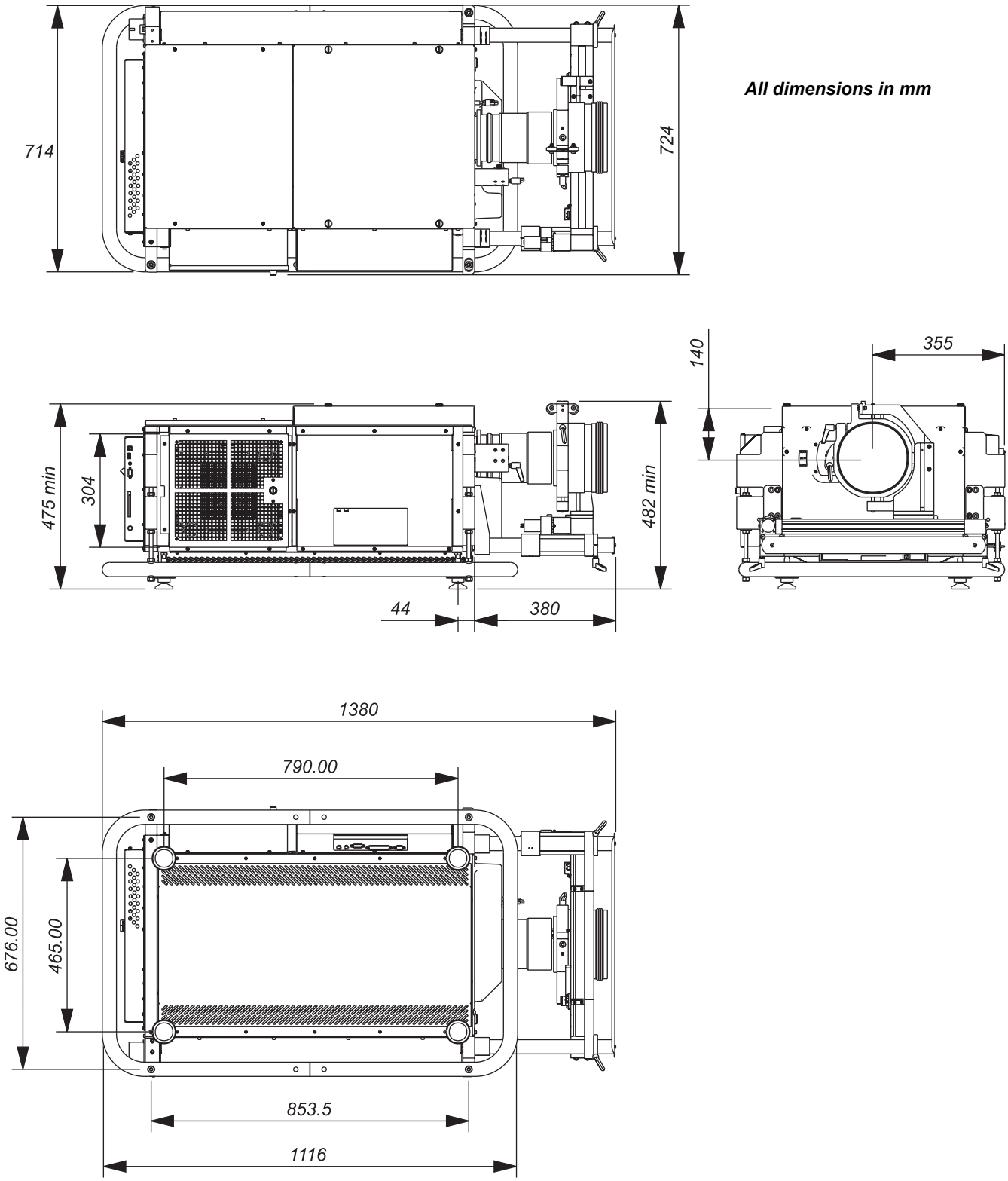
with anamorphic lens fitted