myprojectorlamps.com

The most trusted, dependable name in projector lamp sales.

http://www.myprojectorlamps.com

http://www.myprojectorlamps.ca

http://www.myprojectorlamps.eu

The following projector manual has not been modified or altered in any way.

MITSUBISHI ELECTRIC

sRGB

LCD PROJECTOR

MODEL

XL5950U
XL5900U
XL5950LU
XL5900LU

User Manual

ENGLISH

FRANÇAIS

DEUTSCH

ITALIANO

ESPAÑOL

中文

XL5950

XL5900

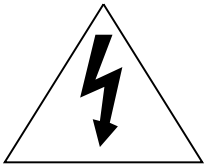

CAUTION

RISK OF ELECTRIC SHOCK
DO NOT OPEN

CAUTION: TO REDUCE THE RISK OF ELECTRIC SHOCK,
DO NOT REMOVE COVER (OR BACK)
NO USER-SERVICEABLE PARTS INSIDE
REFER SERVICING TO QUALIFIED
SERVICE PERSONNEL.

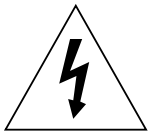

The lightning flash with arrowhead symbol, within an equilateral triangle, is intended to alert the user to the presence of uninsulated "dangerous voltage" within the product's enclosure that may be of sufficient magnitude to constitute a risk of electric shock.

The exclamation point within an equilateral triangle is intended to alert the user to the presence of important operating and maintenance (servicing) instructions in the literature accompanying the appliance.

WARNING:

TO PREVENT FIRE OR SHOCK HAZARD, DO NOT EXPOSE THIS APPLIANCE TO RAIN OR MOISTURE.

CAUTION:

TO PREVENT ELECTRIC SHOCK, DO NOT USE THIS (POLARIZED) PLUG WITH AN EXTENSION CORD, RECEPTACLE OR OTHER OUTLET UNLESS THE BLADES CAN BE FULLY INSERTED TO PREVENT BLADE EXPOSURE.

NOTE:

SINCE THIS PROJECTOR IS PLUGGABLE EQUIPMENT, THE SOCKET-OUTLET SHALL BE INSTALLED NEAR THE EQUIPMENT AND SHALL BE EASILY ACCESSIBLE.

WARNING
Use the attached specified power supply cord. If you use another power-supply cord, it may cause interference with radio and television reception.

Use the attached RGB cable, RS-232C cable with this equipment so as to keep interference within the limit of a FCC Class A device.

This apparatus must be grounded.

DO NOT LOOK DIRECTLY INTO THE LENS WHEN PROJECTOR IS IN THE POWER ON MODE.

CAUTION
Not for use in a computer room as defined in the Standard for the Protection of Electronic Computer/ Data Processing Equipment, ANSI/NFPA 75.

When using the projector in Europe
COMPLIANCE NOTICE
This LCD Video Projector complies with the requirements of the EC Directive 89/336/EEC "EMC Directive" as amended by Directive 93/68/EEC and 73/23/ EEC "Low Voltage Directive" as amended by Directive 93/68/EEC.

The electro-magnetic susceptibility has been chosen at a level that gains proper operation in residential areas, on business and light industrial premises and on small-scale enterprises, inside as well as outside of the buildings. All places of operation are characterised by their connection to the public low voltage power supply system.

WARNING
Use the attached RGB cable or RS-232C cable with this equipment so as to keep interference within the limits of a EN55022 Class B. Use the shielded D-SUB/5 BNC cable with this equipment so as to keep interference within the limits of a EN55022 Class B. Please follow WARNINGS instructions.

Contents

Important safeguards 4
Overview 6
Using the remote control 8
Battery installation 8
Installation 9
Basic connections 10
Projector + AV device 10
Projector + DVD player or HDTV decoder 10
Projector + computer 11
Preparing the projector for operation 12
To operate projector power ON 13
Menu operation 15
Picture adjustment 18
Advanced feature for presentation 20
Expand 20
PinP (Picture in Picture) 20
Still 20
Mouse remote control 21
Lamp replacement 22
Maintenance 23
About the terminal cover (with Anti-Theft Alarm device) 24
Troubleshooting 25
Indicators 26
Specifications 27
Kensington Lock 27
Connectors 28
Dimensional drawings 28
What's included in the box 28
Replacement part 28
Specification of RGB signals in each computer mode of the projector 29
Specification of the attached lens (for XL5950LU and XL5900LU) 30

Trademark, Registered trademark

Macintosh is registered trademark of Apple Computer Inc.
Other brand or product names are trademarks or registered trademarks of their respective holders.

Important safeguards

Please read all these instructions regarding your LCD projector and retain them for future reference. Follow all warnings and instructions marked on the LCD projector.

1. Read instructions
   All the safety and operating instructions should be read before the appliance is operated.
2. Retain instructions
   The safety and operating instructions should be retained for future reference.
3. Warnings
   All warnings on the appliance and in the operating instructions should be adhered to.
4. Instructions
   All operating instructions must be followed.
5. Cleaning
   Unplug this projector from the wall outlet before cleaning it. Do not use liquid aerosol cleaners. Use a damp soft cloth for cleaning.
6. Attachments and equipment
   Never add any attachments and/or equipment without the approval of the manufacturer as such additions may result in the risk of fire, electric shock or other personal injury.
7. Water and moisture
   Do not use this projector near water or in contact with water.
8. Accessories
   Do not place this projector on an unstable cart, stand, tripod, bracket or table. Use only with a cart, stand, tripod bracket, or table recommended by the manufacturer or sold with the projector. Any mounting of the appliance should follow the manufacturer's instructions and should use a mounting accessory recommended by the manufacturer.

   An appliance and cart combination should be moved with care. Quick stops, excessive force and uneven surfaces may cause the appliance and cart combination to overturn.
9. Ventilation
   Slots and openings in the cabinet are provided for ventilation, ensuring reliable operation of the projector and to protect it from overheating. Do not block these openings or allow them to be blocked by placing the projector on a bed, sofa, rug, or bookcase. Ensure that there is adequate ventilation and that the manufacturer's instructions have been adhered to.
10. Power sources
    This projector should be operated only from the type of power source indicated on the marking label. If you are not sure of the type of power, please consult your appliance dealer or local power company.
11. Power-cord protection
    Power-supply cords should be routed so that they are not likely to be walked on or pinched by items placed upon or against them. Pay particular attention to cords at plugs, convenience receptacles, and points where they exit from the appliance. Do not put the power cord under a carpet.
12. Overloading
    Do not overload wall outlets and extension cords as this can result in a fire or electric shock.
13. Objects and liquids
    Never push objects of any kind through openings of this projector as they may touch dangerous voltage points or short-out parts that could result in a fire or electric shock. Never spill liquid of any kind on the projector.
14. Servicing
    Do not attempt to service this projector yourself. Refer all servicing to qualified service personnel.
15. Damage requiring service
    Unplug this projector from the wall outlet and refer servicing to qualified service personnel under the following conditions:
    (a) If the power-supply cord or plug is damaged.
    (b) If liquid has been spilled, or objects have fallen into the projector.
    (c) If the projector does not operate normally after you follow the operating instructions. Adjust only those controls that are covered by the operating instructions. An improper adjustment of other controls may result in damage and may often require extensive work by a qualified technician to restore the projector to its normal operation.
    (d) If the projector has been exposed to rain or water.
    (e) If the projector has been dropped or the cabinet has been damaged.
    (f) If the projector exhibits a distinct change in performance - this indicates a need for service.
16. Replacement parts
    When replacement parts are required, be sure that the service technician has used replacement parts specified by the manufacturer or parts having the same characteristics as the original part. Unauthorized substitutions may result in fire, electric shock or other hazards.
17. Safety check
    Upon completion of any service or repair to this projector, ask the service technician to perform safety checks determining that the projector is in a safe operating condition.

WARNING:

Unplug immediately if there is something wrong with your projector.
Do not operate if smoke, strange noise or odor comes out of your projector. It might cause fire or electric shock. In this case, unplug immediately and contact your dealer.

Never remove the cabinet.
This projector contains high voltage circuitry. An inadvertent contact may result in an electric shock. Except as specifically explained in the Owner's Guide, do not attempt to service this product yourself. Please contact your dealer when you want to fix, adjust or inspect the projector.

Do not modify this equipment.
It can lead to fire or electric shock.

If you break or drop the cabinet.
Do not keep using this equipment if you break or drop it. Unplug the projector and contact your dealer for inspection. It may lead to fire if you keep using the equipment.

Do not face the projector lens to the sun.
It can lead to fire.

Use correct voltage.
If you use incorrect voltage, it can lead to fire.

Do not place the projector on uneven surface.
Place the projection on a leveled and stable surface only. Please do not place equipment on unstable surfaces.

Do not look into the lens when it is operating.
It may hurt your eyes.Never let children look into the lens when it is on.

Do not turn off the main power abruptly or unplug the projector during operation.
It can lead to lamp breakage, fire, electric shock or other trouble. It is best to wait for the fan to turn off before turning main power off.

Do not touch Air outlet grille and Bottom plate which becomes hot.
Do not touch them or put other equipment in front of Air outlet grille. The heated Air outlet grille and Bottom plate may cause injury or damage to other equipment. Also, do not set the projector on the desk which is easily affected by heat.

Clean the air-filter once a month.
Clean the air-filter frequently. If the filter or ventilation slots become clogged with dirt or dust, the temperature inside of the projector may rise and cause some troubles, such as damage of inside parts, and shortening the life of panel.

Do not look into the air outlet grille when projector is operating.
Heat, dust etc. may blow out of it and hurt your eyes.

Do not insert your fingers in the space between the lens and the cabinet.
The lens may shift causing injury or damage to the projector.

Place of installation
For safety's sake, refrain from setting the projector at any place subjected to high temperature and high humidity. Please maintain an operating temperature, humidity, and altitude as specified below.

- Operating temperature: between +41°F (+5°C) and +104°F (+40°C)
- Operating humidity: between 30 and 90%
- Never put any heat-producing device under the projector so that the projector does not overheat.
- Do not attach the projector to a place that is unstable or subject to vibration.
- Do not install the projector near any equipment that produces a strong magnetic field. Also refrain from installing near the projector any cable carrying a large current.
- Place the projector on a solid, vibration free surface: otherwise it may fall, causing serious injury to a child or adult, and serious damage to the product.
- Do not stand the projector: it may fall, causing serious injury and damage to the projector.
- Slanting the projector more than ±15°(right and left or front and rear) may cause trouble or explosion of the lamp.
- Do not place the projector near air-conditioning unit or heater to avoid hot air to the exhaust and ventilation hole of the projector.

COMPLIANCE NOTICE OF FCC

This equipment has been tested and found to comply with the limits for a Class A digital device, pursuant to Part 15 of the FCC Rules. These limits are designed to provide reasonable protection against harmful interference when the equipment is operated in a commercial environment. This equipment generates, uses, and can radiate radio frequency energy and, if not installed and used in accordance with the instruction manual, may cause harmful interference to radio communications. Operation of this equipment in a residential area is likely to cause harmful interference in which case the user will be required to correct the interference at his own expense.
This digital apparatus does not exceed the Class A limits for radio noise emissions from digital apparatus as set out in the interference-causing equipment standard entitled "Digital Apparatus", ICES-003 of the Department of Communications.

Changes or modifications not expressly approved by Mitsubishi could void the user's authority to operate this equipment.

COMPLIANCE NOTICE OF INDUSTRY CANADA

This Class A digital apparatus complies with Canadian ICES-003.

Overview

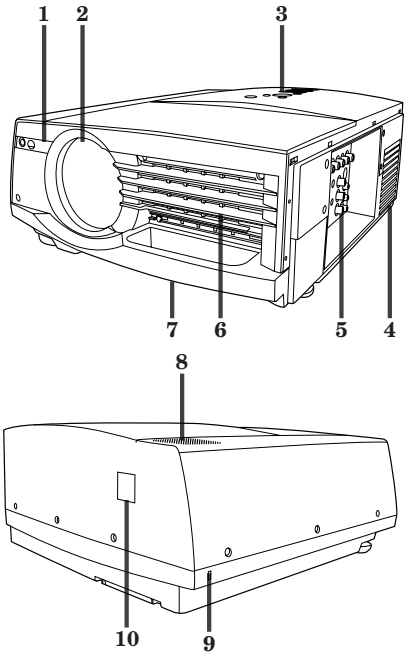

1 Remote control sensor (Front)
2 Lens
3 Control area
4 Air outlet grille
5 Terminal panel
6 Air inlet grille
7 Easy-carry handle
8 Speaker
9 Kensington Security Lock Standard connector
10 Remote control sensor (Rear)

Control area

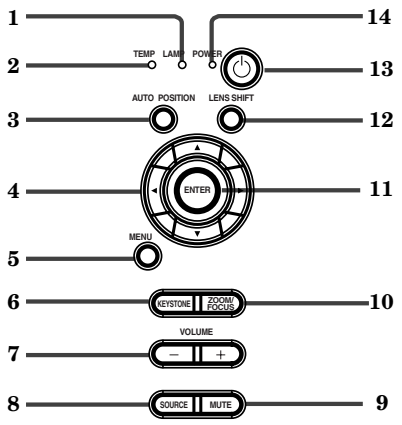

1 LAMP indicator
2 TEMP (temperature) indicator
3 AUTO POSITION button
4 Direction buttons
5 MENU button
6 KEYSTONE button
7 VOLUME (+, –) buttons
8 SOURCE button
9 MUTE button (Audio/Video)
10 ZOOM/FOCUS button
11 ENTER button
12 LENS SHIFT button
13 POWER button
14 POWER indicator

- The + and - buttons are used in the KEYSTONE and ZOOM/FOCUS adjustment in addition to the volume control.

Terminal panel

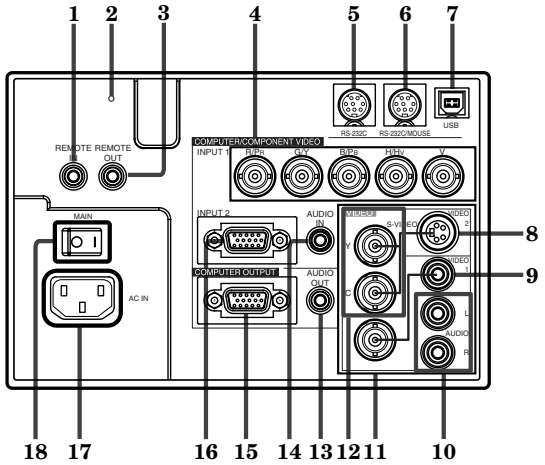

1 REMOTE IN jack
2 Reset button
3 REMOTE OUT jack
4 COMPUTER / COMPONENT VIDEO INPUT 1 terminal (R/PR, G/Y, B/PB, H/HV, V)(BNC)
5 RS-232C terminal(8P)
6 RS-232C/MOUSE terminal(8P)
7 USB terminal
8 VIDEO 2 terminal (S-Video)
9 VIDEO 1 terminal (RCA)
10 AUDIO terminals
11 VIDEO 1 terminal (BNC)
12 VIDEO 2 terminals (Y,C)(BNC)
13 COMPUTER AUDIO OUT jack
14 COMPUTER AUDIO IN jack
15 COMPUTER OUTPUT terminal (D-SUB mini 15P)
16 COMPUTER / COMPONENT VIDEO INPUT 2 terminal (D-SUB mini 15P)
17 Power jack
18 Main power
O : OFF I : ON

Bottom side

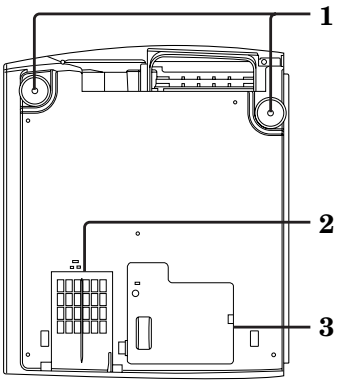

1 **Adjustment foot (Left/Right)**
2 **Air inlet grille/Filter cover**
3 **Lamp cover**

Caution:
Do not replace the lamp immediately after using the projector because the lamp has got extremely hot.

Remote control

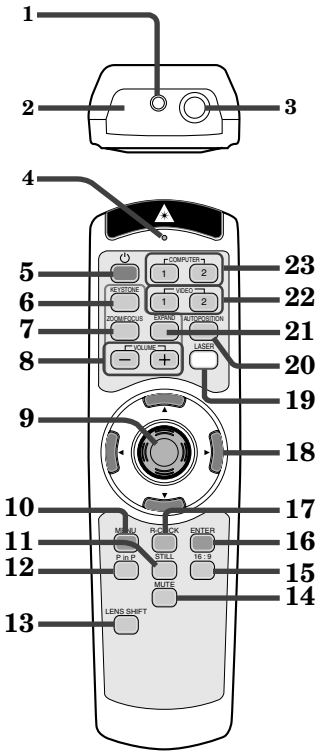

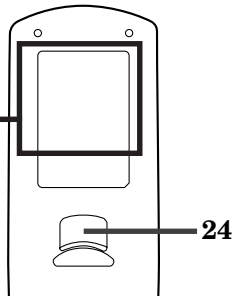

1 **Laser aperture**
2 **Transmission window**
3 **Wired remote control jack**
4 **Indicator**
5 **POWER button**
6 **KEYSTONE button**
7 **ZOOM/FOCUS button**
8 **+ , – (VOLUME) buttons**
9 **Mouse pointer**
10 **MENU button**
11 **STILL button**
12 **PinP button**
13 **LENS SHIFT button**
14 **MUTE button (Audio/Video)**
15 **16 : 9 button**
16 **ENTER button**
17 **R-CLICK button (For mouse)**
18 **Direction buttons**
19 **LASER button**
20 **AUTO POSITION button**
21 **EXPAND button**
22 **VIDEO 1, 2 button**
23 **COMPUTER 1, 2 button**
24 **Left click button (For mouse)**

- The + and - buttons are used in the KEYSTONE and ZOOM/FOCUS adjustment and the EXPAND mode in addition to the volume control.
- Pressing the LASER button emits a laser beam. Even when you keep holding down the LASER button, it is emitted only one minute. To keep emitting it longer, press the LASER button again.
- You can disable the LASER button to prevent laser radiation due to misuse of the button.

  How to disable the LASER button
  While holding the LASER button down, press the ▼ button three times.

  How to enable the LASER button
  While holding the LASER button down, press the ▲ button three times.

About the laser beam

This remote control is a Class 2 laser product. (Max. output : 1 mW, Wavelength : 640-660 nm)
Beam Divergence : 6m distance about 10.0mm x 10.0mm (±6.0mm)

CAUTION :

- Pressing the LASER button on the remote control emits a laser beam. Do not look into the laser beam directly. Do not point the laser beam at anyone. Looking at the laser beam directly may damage eyesight.
- Use of controls or adjustments or procedures other than those specified herein may result in hazardous radiation exposure.

Using the remote control

Battery installation

Use two AA size batteries.

1. Remove the back cover of the remote control by pushing the battery compartment door in the direction of the arrow.
2. Load the batteries making sure that they are positioned correctly (+ to +, and - to -).
   - Load the batteries from - spring side, and make sure to set them tightly.
3. Replace the back cover.

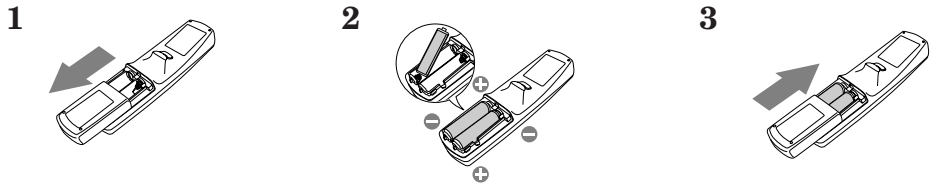

Important:

- Do not use a new battery with an old one.
- Load batteries in the correct position.
- Do not heat, take apart, or throw batteries into fire.
- Do not try to recharge batteries. Do not use rechargeable batteries.
- If the solution of batteries comes in contact with your skin or clothes, rinse with water. If the solution comes in contact with your eyes, rinse them with water and then consult your doctor.

Operation area (for wireless control system)

The range for operation is about 10 m (about 32 feet) when the remote control points to the projector. The distance to the screen back to the projector must be less than 7 m (about 23 feet). Depending on the type of the screen, the distance will be different.

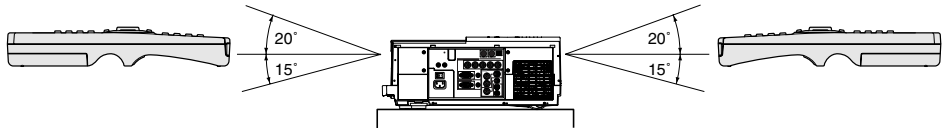

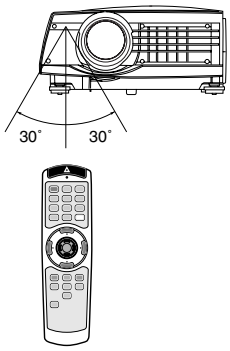

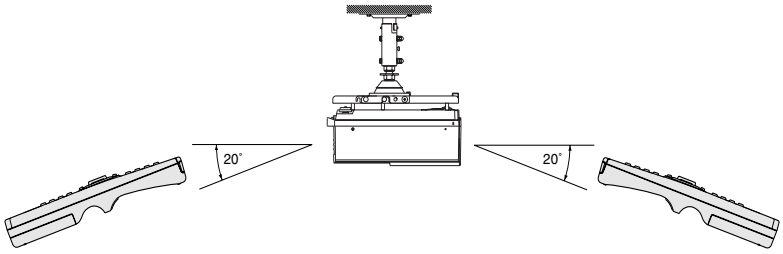

Important:

Avoid the direct sunlight or fluorescent light to the remote control sensor. Also keep the distance of more than 2 m (6.5 feet) between the remote control sensor and fluorescent lamp on the remote control may not work correctly.

Using the wired remote control

Attached remote control for this projector can be used as a wired remote control with remote control cable. Wired remote control is useful for operating in a distance or outside of the operating area.

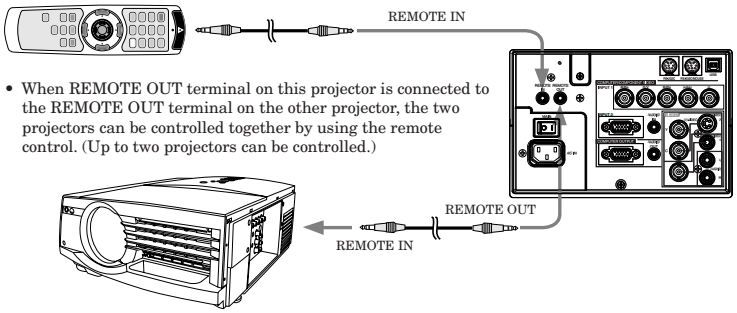

- When the remote control is connected with remote control cable, it does not work as a wireless remote control.
- For connection, use the pin-pin cable of ø3.5 stereo type, which is commercially available. However, some cable may not work correctly.
- When using the wired remote control, the laser beam may be darker. It is normal.

Installation

Orientation of the projector

Picture size can be set by changing the distance between the screen and the projector.

Front projection

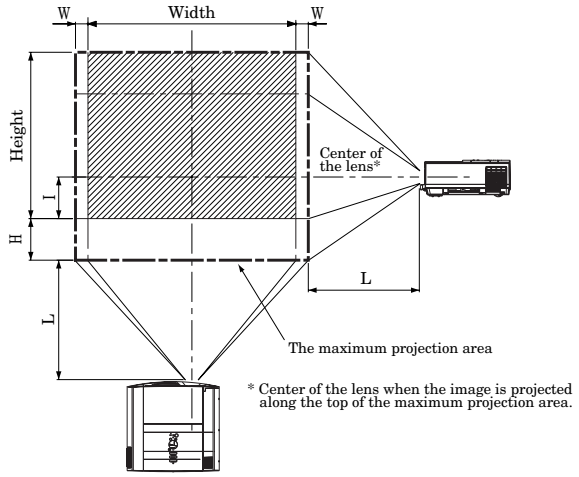

Front projection, ceiling mount

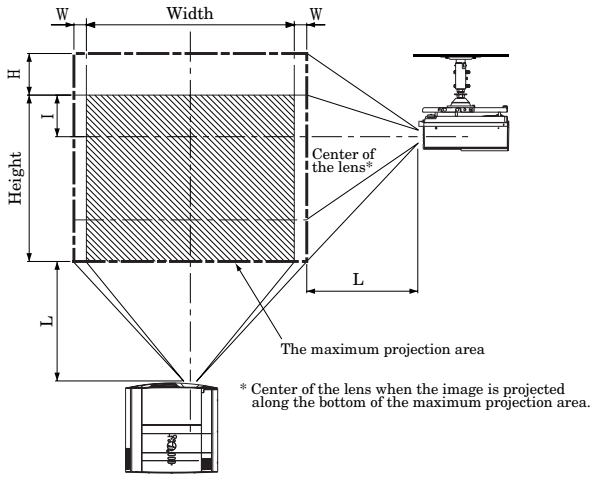

For XL5950U and XL5900U only. About for XL5950LU and XL5900LU, please refer to page 30.

Screen						Distance from the screen : L				Lens shift height				Lens shift width : W	
Diagonal size		Width		Height		Maximum zoom (WIDE)		Minimum zoom (TELE)		Standard : I		Movement Distance : H			
inch	cm	inch	cm	inch	cm	inch	m	inch	m	inch	cm	inch	cm	inch	cm
60	152	48	122	36	91	89	2.3	114	2.9	1.8	4.6	16.6	42.0	2.5	6.2
80	203	64	163	48	122	120	3.0	153	3.9	2.4	6.1	22.0	55.8	3.3	8.3
100	254	80	203	60	152	150	3.8	191	4.9	3.0	7.6	27.4	69.5	4.1	10.3
150	381	120	305	90	229	227	5.8	289	7.3	4.5	11.4	40.9	103.8	6.1	15.4
200	508	160	406	120	305	304	7.7	386	9.8	6.0	15.2	54.4	138.1	8.1	20.5
250	635	200	508	150	381	381	9.7	483	12.3	7.5	19.1	67.9	172.4	10.1	25.5
300	762	240	610	180	457	458	11.6	-	-	9.0	22.9	81.4	206.6	12.1	30.6

- The above numbers are approximate, and may be slightly different from the actual measurements.

Front projection, ceiling mount

For ceiling mount, you need the ceiling mount kit. Ask a specialist for installation. For more details, consult your dealer.

- This warranty does not cover damage caused by the use of any unrecommended ceiling mount kit and the installation of the ceiling mount kit at an improper location.
- When using the ceiling mount, set IMAGE REVERSE in the INSTALLATION menu to MIRROR INVERT. See Page 16.
- Projected images may appear darker when the unit is used as a ceiling installation than when it is used in the tabletop position. This does not signify a product malfunction.

Rear projection

Ask a specialist for installation. For more details, consult your dealer.

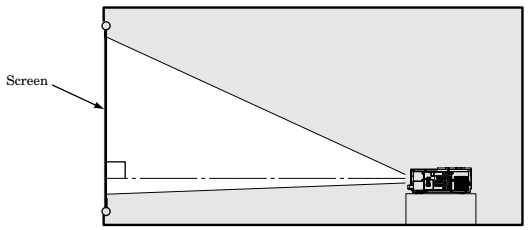

- For rear projection, set IMAGE REVERSE in the INSTALLATION menu to MIRROR. See Page 16.

Caution:

- Placing the projector on a carpet reduces ventilation from the fan at the bottom and might cause problems. Place a hard board or similar item under the projector to facilitate ventilation of the unit.
- Place the projector more than 50 cm (20 inch) from the wall to prevent blocking the intake, exhaust slots and ventilation of this projector because hot air comes out of it.
- Do not use the projector under the following circumstances, which may cause fire or electric shock.
  - in a dusty or humid place
  - while the projector is lying sideways or upside down
  - near a heater
  - in a kitchen or oily, smoky or damp place
  - in direct sunlight
  - with high temperature, such as a closed car
  - where the temperature is lower than 41°F (+5°C) or higher than 104°F (40°C).

Important:

- Do not put stress on the lens, as this may cause damage.

Basic connections

This projector can be connected with various devices such as a VCR, video camera, videodisc player, and personal computer that have analog RGB output connectors.

Important:
- Make sure that the connected device is turned off before starting connection.
- Plug in the projector and the connected devices firmly, and unplug them by holding and pulling out their power plugs, not by pulling the power cords.
- When the projector and the connected devices are located too close to each other, the projected image may be affected by their interference.
- See the owner's guide of each device for details about their connections.

Projector + AV device

Important:
- Connect the video and audio plugs of the AV cable to the proper terminals matching their colors respectively.
- When the connected AV device uses a BNC connector for its video output, connect it to the VIDEO 1 (BNC) terminal. When both the VIDEO 1 (BNC) terminal and the VIDEO 2 (RCA) terminal are engaged at the same time, the image supplied to the VIDEO 2 (RCA) terminal takes priority.
- When the connected AV device uses a BNC connector for its S-video output, connect it to the VIDEO 2 (Y,C)(BNC) terminal. When both the VIDEO 2 (Y,C) (BNC) terminal and the S-VIDEO 2 terminal are engaged at the same time, the image supplied to the S-VIDEO 2 terminal takes priority.

When using the video (RCA) or S-video connector

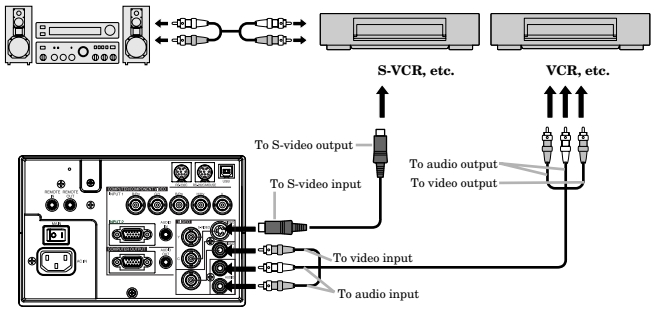

When using the BNC connector

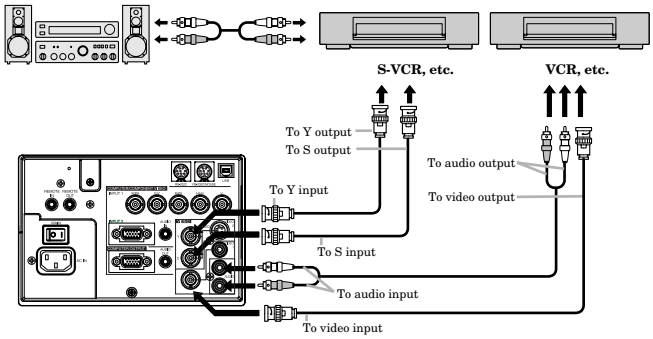

Projector + DVD player or HDTV decoder

Some DVD players have an output connector for 3-line fitting (Y, C_B, C_R). When connecting such a DVD player with this projector, use the COMPUTER/COMPONENT VIDEO INPUT 1 terminal.

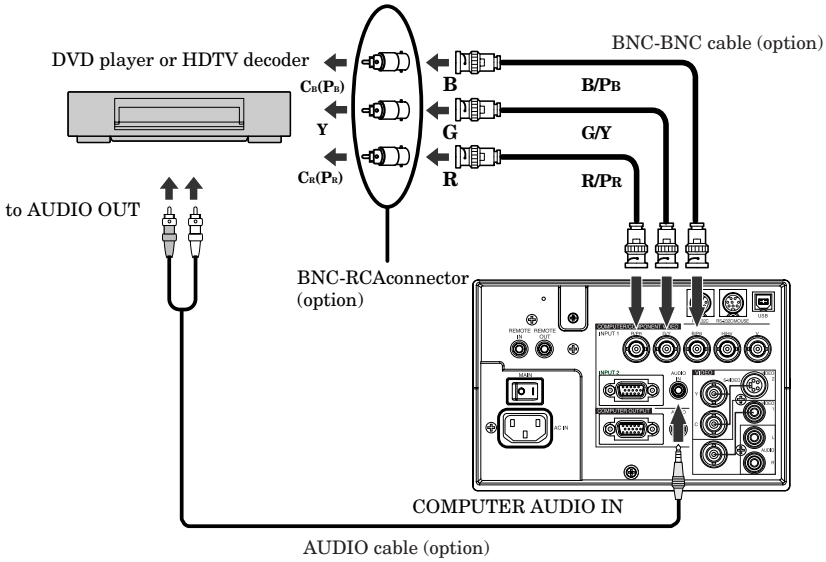

- The terminals' names Y, P_B, and P_R are examples of a case where a HDTV decoder is connected.
- The terminals' names are different depending on the connected devices.
- Use BNC-BNC cables for connection.
- The image may not be projected correctly with some DVD players.
- When connecting a HDTV decoder having RGB output terminals, set the COMPUTER INPUT to RGB in the SIGNAL menu.

Projector + Computer

For using the COMPUTER/COMPONENT VIDEO INPUT 2 (Mini D-SUB 15P) terminals

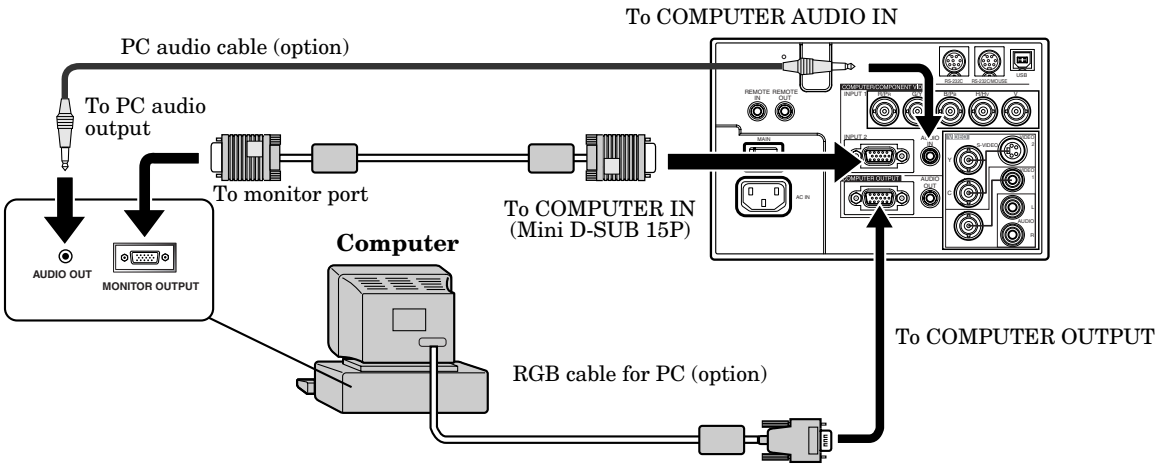

When outputting to both the compute's monitor and the projector.

For using the COMPUTER/COMPONENT VIDEO INPUT 1 (BNC) terminals

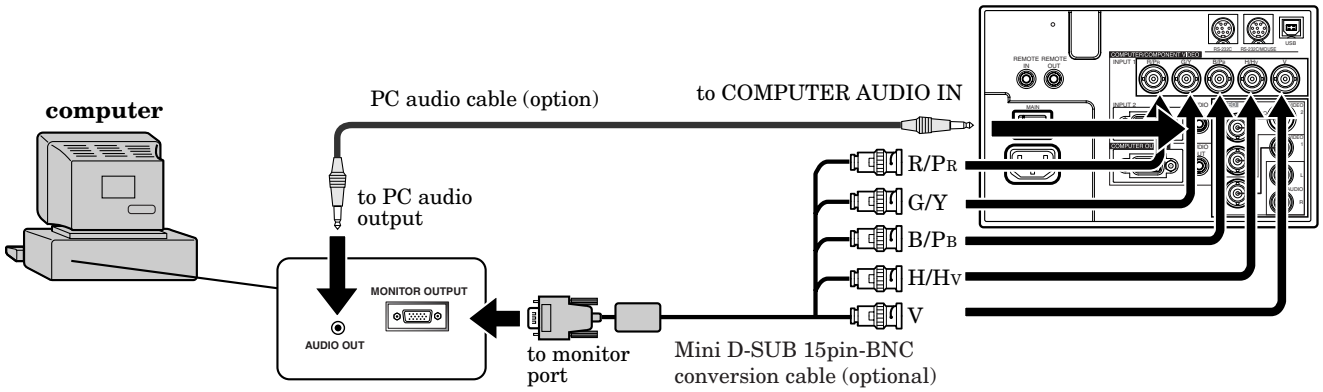

Important:

- When you use a longer RGB cable instead of the provided cable, the picture quality may deteriorate.
- Some computers may require additional connectors or analog RGB output adapters to be connected with this projector. Contact your dealer for further information.
- This projector uses a stereo pin jack for its audio input. Check the type of the audio output terminal of the connected computer and prepare a proper cable for connection. Some computers may not have the audio output terminal.

For Macintosh

- If your Macintosh has no video port, a monitor output adapter is required. Contact your dealer for further information.
- Some Macintoshes may require a MAC adapter for the RGB cable for connection with this projector. Contact your dealer for further information.

About DDC™

The COMPUTER/COMPONENT VIDEO INPUT 2 terminal of this projector complies with the DDC1/2B standard.
When a computer supporting this standard is connected to this terminal, the computer will automatically load the information from this projector and prepare for output of appropriate images.

- After connecting a computer supporting this standard to this terminal, turn on the projector's main power switch first, and then boot up the computer.
- You may need to install the DDC driver, depending on the computer you use. In this case, you need to download the driver from our Web site. Contact your dealer or Mitsubishi sales office for further information.

Preparing the projector for operation

Getting ready for projection

1. Attach the provided power cord to the projector.
2. Plug the power cord in the wall outlet.
3. Remove the lens cap.

Warning:

- Do not look into the lens directly when the projector is "ON."
- The lens cap is for protecting the lens. If you leave the lens cap on the lens with the projector turned on, it may be deformed. Remove the lens cap when you turn on the projector.
- The power cords for use in the U.S. and Europe are included with this projector. Use the appropriate one for your country.
- This projector uses the power plug of three-pin grounding type. Do not take away the grounding pin from the power plug. If the power plug doesn't fit your wall outlet, ask an electrician to change the wall outlet.
- The provided power cord for the U.S. is rated at 120 V. Never connect this cord to any outlet or power supply using other voltages or frequencies than rated. If you use a power supply using other voltage than rated, prepare an appropriate power cord separately.
- Use 100-240 V AC 50/60 Hz to prevent fire or electric shock.
- Do not place any objects on the power cord and keep the projector away from heat sources to prevent damage to the power cord. If the power cord gets damaged, contact your dealer for replacement because it may cause fire or electric shock.
- Do not modify or alter the power cord. If the power cord is modified or altered, it may cause fire or electric shock.

Caution:

- Plug in the power cord firmly, and unplug it by holding and pulling out the power plug, not by pulling the power cord.
- Do not plug in or out the power cord with your hand wet. It may cause electric shock.

Adjusting the angle of projection

For the best projection, project the image on a flat screen installed at 90 degrees to the floor. If necessary, tilt the projector using the two adjustment feet on the bottom of the projector.

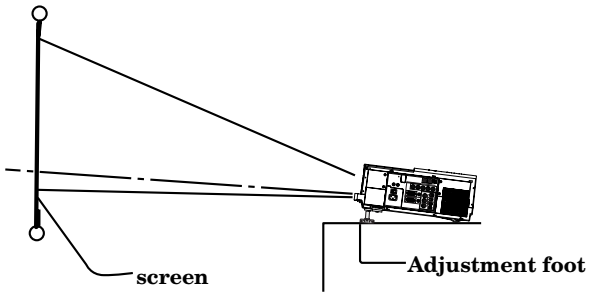

1. Rotate the adjustment feet for fine adjustment.

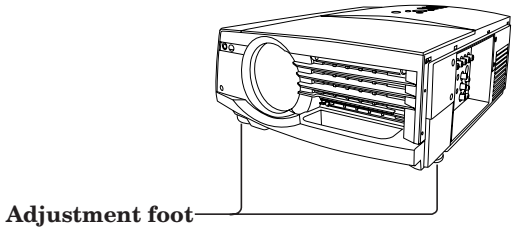

After using the projector

2. Put the adjustment feet back into the projector by rotating the adjustment feet.

- Install the screen on a flat wall at 90 degrees to the floor.
- Position the projector so that it projects an image filling the screen as illustrated on page 9.
- Keep an appropriate distance from the projector to the screen according to the screen size chart on page 9.
- The image becomes trapezoid shape when the screen or project is not level. Use KEYSTONE button and + or - buttons to adjust, however, the circumference of the image may not be focused.

Important:

- Slanting the projector more than ±15° (right and left or front and rear) may cause trouble or explosion of the lamp. You can tilt the projector up to 7 degrees using the adjustment feet only.
- The image may not be projected in a shape of a regular rectangle or with its aspect ratio of 4:3, depending on the installation conditions of the projector and the screen.
- When the keystone adjustment is carried out, the adjustment value is indicated. Note that this value doesn't mean a projection angle.
- The allowable range of the adjustment value in the keystone adjustment will vary depending on the installation conditions.

To operate projector power ON

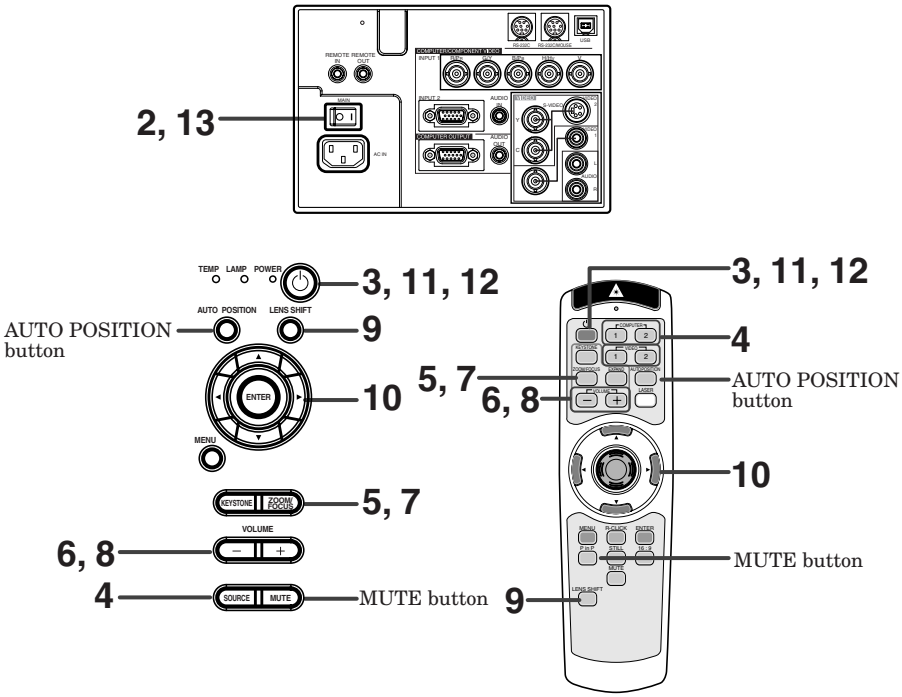

1. Turn on the equipment connected to the projector.
2. Put the projector into standby mode by pressing the main power switch. The POWER indicator lights up red.
3. Turn the projector on by pressing the POWER button. The light source lamp starts warming up, eventually turning completely on.
   - The lamp may take about a minute to light up.
   - The lamp occasionally fails to light up. Try to light up the lamp again after a few minutes.
   - If the projector has not cooled down completely since the last turning-off, the fan may start rotating when the main power switch is turned on and the POWER button may not function. Press the POWER button to light up the lamp after the fan stops.

condition \ indicator	LAMP	POWER
stand-by	-	red
when light source lamp is on	green	green
light source lamp held off temporarily	-	red

Important:
- A darkened image may be seen right after pressing the POWER button due to warming up of this projector. While warming up, no other commands can be accepted.
- After the power is turned on or the LAMP MODE is changed, the screen may flicker before the lamp operation becomes stable. This is due to the characteristics of the lamp, not a failure of the lamp.
- When the lamp indicator is blinking red, the service life of the lamp is about to end. Replace the lamp. See pages 22 and 26.
- The picture might not be of optimum performance in extreme hot or cold conditions. (The projector is not malfunctioning.)

4. Press the ZOOM/FOCUS button to FOCUS. “FOCUS” will appear on the display.
5. Adjust with the + or - button to get a fine picture.
6. Select the desired external input source by using the COMPUTER 1,2 or VIDEO1,2 button on the remote control or the SOURCE button on the control panel.
   - Pressing the SOURCE button on the control panel repeatedly will select VIDEO 1, VIDEO 2, COMPUTER 1 and COMPUTER 2.
   - The projector automatically selects the appropriate signal format. The selected signal format is displayed on the screen.
   - The COMPUTER, VIDEO or SOURCE buttons do not work when MENU is displayed. At this time, the prohibition mark (⃠) appears on the screen.
   - When selecting the COMPUTER input, the image may flicker. Press the ◀ or ▶ button to adjust the image.
   - The intensity of the lamp will be STANDARD for 2 minutes regardless of the setting of the LAMP MODE when the lamp turns on.
7. Press the ZOOM/FOCUS button to ZOOM. “ZOOM” will appear on the display.
8. Adjust with the + or - button to get an approximate size.
9. Press the LENS SHIFT button. “LENS SHIFT” will appear on the display.
10. Adjust with the ▲, ▼, ◀ or ▶ button to get an approximate lens position.
    - If necessary, adjust focus, zoom and lens shift again.
    - Focus, zoom and lens shift adjustment is possible in the normal picture mode only. In PinP or EXPAND mode, the adjustment is prohibited.

Turning off the projector

Use the following procedure to turn off the power. Don't turn off the power by switching off the main power switch or disconnecting the power plug because these methods may cause deterioration in the lamp's performance or failure in the product.

11. Press the POWER button.
    The message "POWER OFF? YES : PRESS AGAIN" appears on the screen.
    - To exit this mode, press any button except the POWER button. (Some buttons on the remote control don't work for exit from this mode.)
12. Press the POWER button again.
    The light source lamp will go out. Though the light source lamp will go out at this second press of the POWER button, the exhaust fan continues to operate for another 120 seconds to cool down the lamp and LCD panel. In this case, the lamp indicator will go out.
13. Turn off the main power switch, and the POWER indicator will go out.

- In cases where the main power switch is accidentally turned off when either the intake/exhaust fan or the power source lamp is in operation, allow the unit to cool down for 10 minutes with the power turned off. Repeat step 3 when turning on the power source lamp. If the lamp does not turn on immediately, repeat this step two or three times. Replace the lamp if it should still fail to turn on.

AUTO POSITION button

When the image isn't projected in the right position with COMPUTER selected as the image source, follow the steps below.

1. Project a bright image such as the "Trash" window on the full screen.
2. When the screen saver is running, turn it off.
3. Press the AUTO POSITION button.

- If the image is still not in the right position, adjust the image position using the SIGNAL menu.

Volume from the speaker

Press the volume + or – button to change the volume from the speaker.
The volume control bar will appear on the screen.

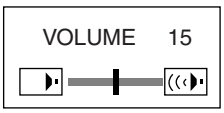

- The volume control bar will disappear about 4 seconds after releasing the volume buttons.
- The volume buttons don't work while the MENU selection bar or the MENU is being displayed.
- When a high-level audio signal, such as a DVD audio signal, is supplied to the COMPUTER AUDIO IN terminal, the output from the speaker may be distorted.

AV mute

The image and audio signals are temporarily muted by pressing the MUTE button. To bring them back to their normal level, press the MUTE button again.

- The audio from the AUDIO OUT jack is also muted by pressing the MUTE button.
- If the MUTE MODE in the INSTALLATION menu is set to LOGO, the splash screen will appear by pressing the MUTE button.
  Please contact your dealer or Mitsubishi sales office for further information.
- You can alter the splash screen freely. Please contact your dealer or Mitsubishi sales office for further information.
- The lamp mode becomes "LOW" during muting. Therefore, the display of LOGO will darken, which isn't a failure.
- Muting will be cancelled in 3 hours automatically for the purpose of protecting devices. However, when the mute mode has been set to "LOGO," muting won't be cancelled.

ANAMORPHIC mode

When playing DVD discs containing data of letterboxed image, press the 16:9 button. Exit the ANAMORPHIC mode, by pressing the 16:9 button again.

Caution:

- When you have finished using this projector, wait 120 seconds for the exhaust fans to stop. Then turn off the main switch and unplug the power cord from the wall outlet, for safety purposes.
- The lamp cannot be turned on again for 60 seconds after it was turned off for precautionary purposes. It will take another 60 seconds before the lamp indicator goes off. If you want to turn on the projector again, wait until the indicator is off, and then press the POWER button.
- The exhaust fan rotates faster as the temperature around the projector rises.
- When the temperature around the projector rises too high, the sign "TEMPERATURE!!" blinks red on the screen. If the temperature stays too high, the lamp will be go out automatically.

Menu operation

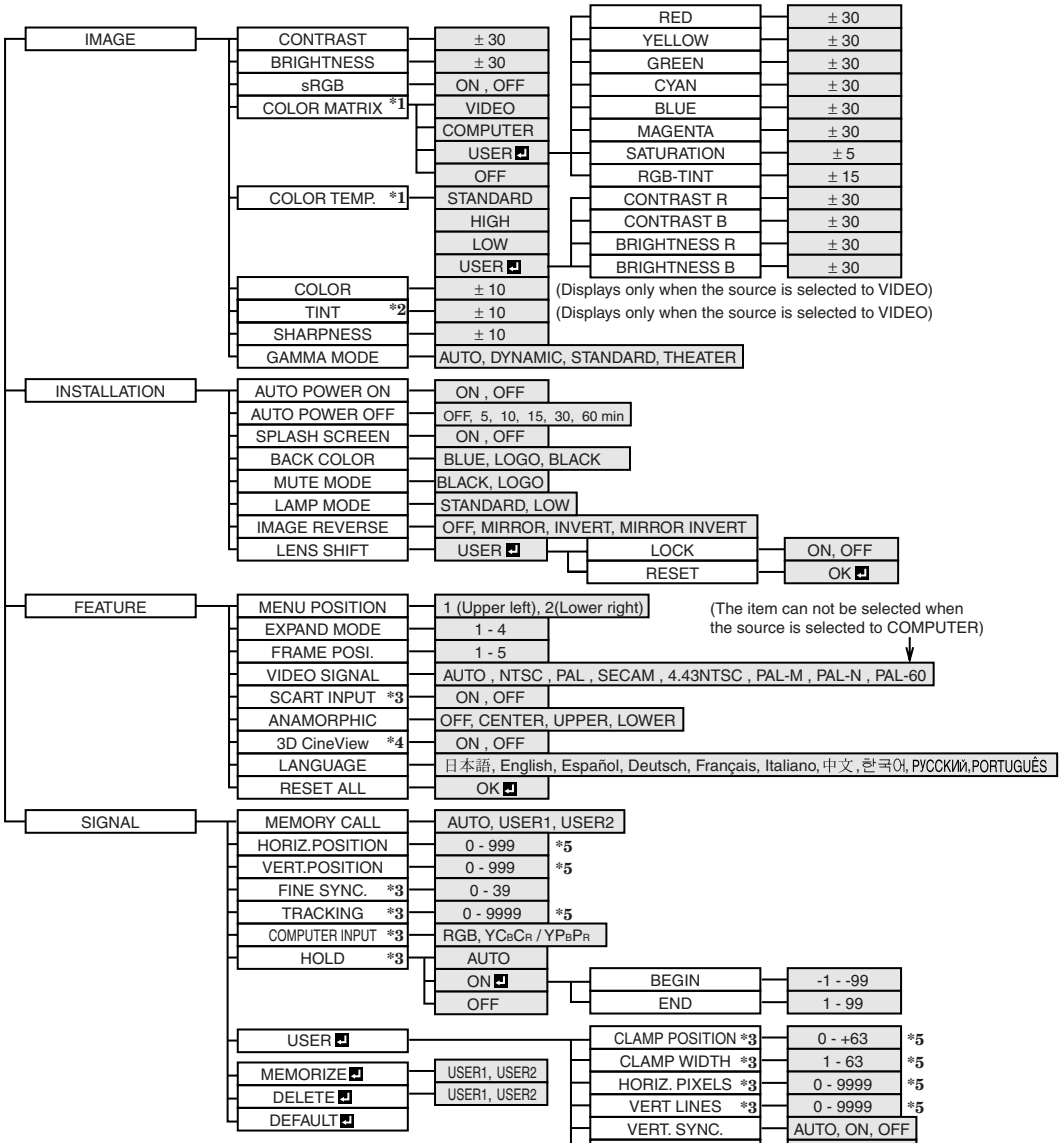

*** 1: The item can not be selected when the sRGB is set to ON.**
*** 2: The item can not be selected with certain signals.**
*** 3: The item can not be selected when the selected source is VIDEO or S-VIDEO.**
*** 4: The item can be selected only when the selected source is VIDEO or S-VIDEO or the inputted signal is TV50 or TV60.**
*** 5: Setting range is different with certain signals.**

Basic operation

Several settings can be adjusted using Menu.
EXAMPLE: Auto power off time setting

1. Press the MENU button.

2. Press the ◀ or ▶ button to select the INSTALLATION menu.

3. Press the ENTER button (or ▼ button).

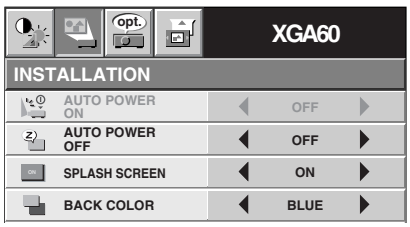

4. Press the ▲ or ▼ button to select AUTO POWER OFF.

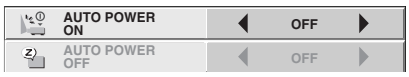

5. Press the ◀ or ▶ button to adjust auto power off time.

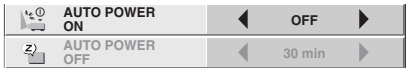

6. Exit the menu system by pressing the MENU button several times.

- If the menu operation is not working, press the RESET button on the terminal board using a suitable sharp object, push gently.
- The settings with ↵ mark, you should press the ENTER button after selecting.

1 IMAGE

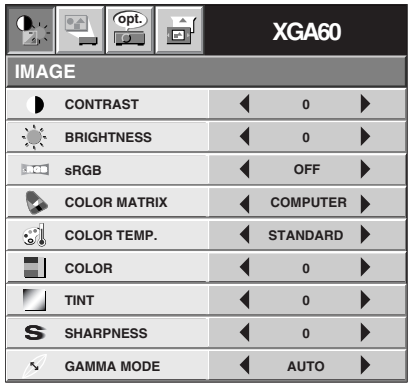

CONTRAST ..... Adjusts the picture contrast. The contrast becomes higher as the number increases.

BRIGHTNESS ..... Adjusts the image brightness. The image becomes brighter as the number increases.

sRGB ..... Select ON to display an image emphasizing on the color reproducibility.

- When sRGB is ON, COLOR MATRIX, COLOR TEMP. and GAMMA COLLECTION can't be ad justed.

COLOR MATRIX ..... Adjusts the color balance in each color of the image. See page 18.

COLOR TEMP. .... Adjusts the color temperature. See page 19.

COLOR ..... Adjusts the color intensity of the image. (Available only when VIDEO is selected as the source.)

TINT ..... Adjusts the color balance of the image. The color balance of the image shifts green as the number increases and shifts to purple as the number decreases. (Available only when VIDEO is selected as the source.)

- When the TV50 (PAL, SECAM) signal is inputted, TINT can't be adjusted.

SHARPNESS ..... Adjusts the image sharpness. The image sharpness rises as the number increases.

GAMMA MODE ... When AUTO is selected, the appropriate gamma mode is automatically selected depending on the input signal. For normal use, select AUTO. Select DYNAMIC for computer sources. Select STANDARD for sport scenes and video sources. Select THEATER for projecting film sources.

2 INSTALLATION

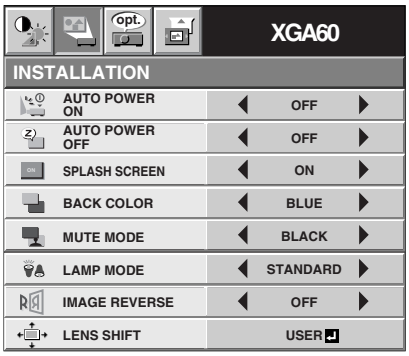

AUTO POWER ON ..... Select ON to boot up the projector automatically by turning on an externally connected power switch such as a breaker even when the main power switch of the projector is off. Use this setting when the projector is hanging from the ceiling.

- The projector will be in the stand-by mode when the lamp is off. Use the remote control to turn on the lamp.

AUTO POWER OFF .... Set the time elapsed before the projector enters into the stand-by mode when there is no signal inputted from the selected source.

SPLASH SCREEN ..... Select ON to display the splash screen when the power is turned ON.

- The splash screen can be changed. For more details, please consult your dealer.

BACK COLOR ..... Use to select the background, BLUE, BLACK or LOGO, which will be displayed when there is no signal inputted from the selected source. When the LOGO is selected, the splash screen will be displayed.

MUTE MODE ..... Use to select the background, BLACK or LOGO, which will be displayed when the MUTE button is pressed. When the LOGO is selected, the splash screen will be displayed.

LAMP MODE ..... Use to change the brightness of the lamp. When LOW is selected, the image will become darker, though the power will be saved, operating sound will be reduced.

- The intensity of the lamp will be STANDARD for 2 minutes regardless of the setting of the LAMP MODE when the lamp turns on.
- When the LAMP MODE is changed, the screen may flicker. This is not a failure of the lamp.

IMAGE REVERSE ..... Use to reverse or invert the projected image. Select MIRROR in rear projection. Select MIRROR, INVERT in rear projection with the projector hanging from the ceiling.

LENS SHIFT ..... To enter the LENS SHIFT setting mode, press the ENTER button. For lock the lens position, set LOCK to ON. For reset the lens position, select RESET and press the ENTER button.

- When no signal is supplied for 6 hours with BACK COLOR set to BLACK, it changes to BLUE automatically for the purpose of protecting the projector.
- When you continue projection for a long time with BACK COLOR or MUTE set to LOGO, an after-image may persist on the screen.
- When the signal is lost during muting with MUTE set to LOGO, AUTO POWER OFF is ignored even though it is active.

3 FEATURE

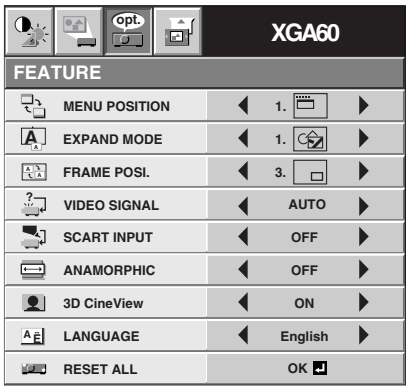

MENU POSITION ..... Use to select the position of the menu on the screen, (upper left) or (lower right).
EXPAND MODE .. Select the mode for enlarging screen. See page 20.
FRAME POSI. ..... Sets the position of sub screen. See page 20.
VIDEO SIGNAL ... When AUTO is selected, the appropriate video format is automatically selected depending on the input signal. If the image isn't displayed correctly, select the desired video format manually.
SCART ..... Select ON when connecting with a device equipped with the SCART terminal that can output RGB signal. SCART terminal is used mainly in Europe. Select OFF normally.
ANAMORPHIC .... Select the desired position, UPPER, CENTER or LOWER when playing DVD discs containing data of letterboxed images.
3D Cine View ..... Select ON for high quality video image. Select ON normally.
LANGUAGE ..... Use to select the language used in the menus. (日本語 / English / Español / Deutsch / Français / Italiano / 中文/ 한국어 / РУССКИЙ / PORTUGUÊS)
RESET ALL ..... Use to reset the MENU settings (except LANGUAGE).

- When SCART is set to ON, nothing is output to the external monitor.
- When SCART is set to ON, normal computer signals are not projected.
- Use SCART-BNC (or SCART-Mini D-SUB 15P) cable (option), when connecting with AV device equipped with the SCART terminal.
- Some AV devices equipped with the SCART terminal may not be compatible with the projector.
- When VIDEO SIGNAL is set to AUTO, the image may not be projected with correct colors. Change the setting of VIDEO SIGNAL depending on the input signal in such cases.
- When 3D Cine View is switched from OFF to ON, you can check the motion detection operation about three seconds. The buttons on the remote control don't work during this period, which isn't a failure.
- When the LANGUAGE in FEATURE menu is set to English and NTSC video format is selected, the brightness is decreased 15 points by set-up cancel function for U.S. (The indicated value is not changed.) The image becomes darker, but this is not a failure of the projector.

4 SIGNAL

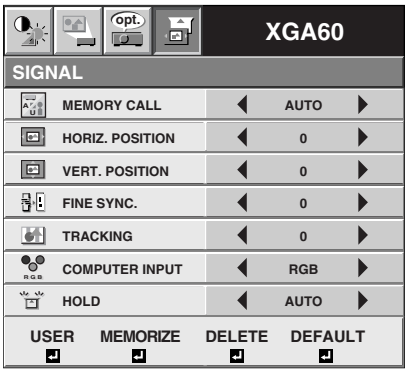

MEMORY CALL ..... Use to select AUTO, USER 1 or USER 2. See page 18.
HORIZ. POSITION ..... Use to adjust the horizontal position of the image.
VERT. POSITION ..... Use to adjust the vertical position of the image.
FINE SYNC. ..... Use to synchronize the projector with PC input signals so that the image is not blurred.
TRACKING ..... Use to avoid image noise such as wide stripes.
COMPUTER INPUT ..... The unit adjusts itself automatically when connected to a DVD player with a component video output (Y, C_B, C_R). In the case the projector is connected to equipment that includes RGB output terminal, adjust to RGB mode.
HOLD ..... Adjusts the image when flagging occurs near the top of the screen.

5 SIGNAL - USER (Normally, there is no need for adjustments.)

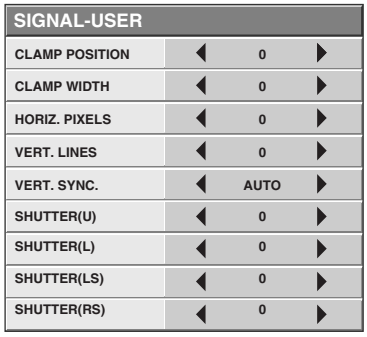

CLAMP POSITION/
CLAMP WIDTH ..... If you use something similar, the brighter colors of the projected image may become blurred. In this case, adjust CLAMP POSITION or CLAMP WIDTH.
HORIZ.PIXELS .... Use to adjust the width of the image. The image size grows wider as the number increases. (Adjust to the horizontal pixels of the input signal for normal setting.)
VERT.LINES ..... Use to adjust the height of the image. The image size grows higher as the number increases. (Adjust to the vertical lines of the input signal for normal setting.)
VERT.SYNC. ..... Use to adjust the image when its motion does not run smoothly. Select AUTO for normal setting.
SHUTTER(U) ..... Use to adjust the image when the noise etc. appears on top part of image.
SHUTTER(L) ..... Use to adjust the image when the noise etc. appears on bottom part of image.
SHUTTER(LS) ..... Use to adjust the image when the noise etc. appears on left side of image.
SHUTTER(RS) ..... Use to adjust the image when the noise etc. appears on right side of image.

- When the setting of the SIGNAL-USER menu is changed, the image may not be displayed correctly. In this case, select DEFAULT in the SIGNAL menu, and press the ENTER button.

Picture adjustment

User memory for signal setting

This projector can memorize the maximum of 2 signal menu settings.

Memorizing the setting

1. Select MEMORIZE ↵ in the SIGNAL menu, and press the ENTER button.
2. Press the ◀ or ▶ button to select the memory which you wish to record (USER 1 or USER 2).
3. Press the ENTER button.

- Any buttons are ineffective about 3 seconds of recording setting. Wait for recording to have been completed before operating the buttons.

Select the user setting

Select MEMORY CALL in SIGNAL menu, and press the ◀ or ▶ button to select the memory (USER 1 or USER 2).

Reset the recorded setting

1. Select DELETE ↵ in the SIGNAL menu, and press the ENTER button.
2. Press the ◀ or ▶ button to select the memory which you wish to reset (USER 1 or USER 2).
3. Press the ENTER button.
   The recorded setting will be reset.

- Any buttons are ineffective about 3 seconds of resetting the recorded setting. Wait for resetting to have been completed before operating the buttons.

Adjusting the image

You can adjust the picture by using the IMAGE menu.

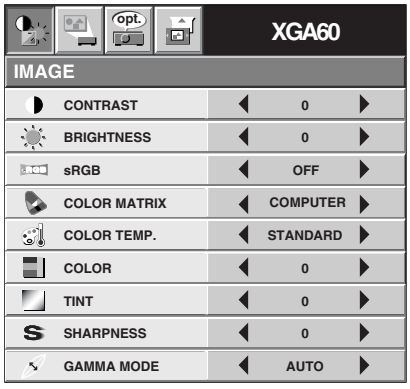

To control the level of white-to-black in the image :
Adjust CONTRAST in IMAGE menu. Press the ▶ button to increase the contrast and the ◀ button to reduce it.

To control the light level of the image :
Adjust BRIGHTNESS in IMAGE menu. Press the ▶ button to lighten the image and the ◀ button to darken the image.

To determine the intensity of the color :
Adjust COLOR in IMAGE menu. Press the ▶ button to increase the amount of color in the image and the ◀ button to decrease it.

To adjust the red-green color balance of the image :
Adjust TINT in IMAGE menu. Press the ▶ button to increase the amount of green in the image and the ◀ button to increase the amount of red in the image.

To adjust the detail and clarity of the image :
Adjust SHARPNESS in IMAGE menu. Press the ▶ button to make the picture seem sharper and the ◀ button to make it softer.

Color matrix

This feature adjusts the color balance in each color of RGB (Red, Green, Blue), and their neutral colors (yellow, cyan, magenta) by using Color correction adjustment. Use Color correct adjustment when enphasizing a specific color, or when only a certain color balance is not correctly adjusted.

1. Select COLOR MATRIX in IMAGE menu.
2. Press the ◀ or ▶ button to select USER ↵.
3. Press the ENTER button.

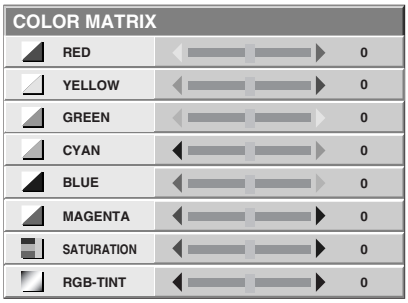

4. Press the ▲ or ▼ button to select the desired color.
   - If you wish to adjust the color intensity of the image, select SATURATION.
   - If you wish to adjust the all color balance of the image, select RGB-TINT.
5. Press the ◀ or ▶ button to adjust the color balance of the color.
6. Repeat steps 4 and 5 for more adjustments.
7. Exit the menu system by pressing the MENU button several times.

- When using the setting which has been already prepared, select desired position VIDEO or COMPUTER in step 2. When the source is selected to VIDEO or S-VIDEO, VIDEO will be selected automatically. When the source is selected to COMPUTER, COMPUTER will be selected automatically.
- When not using Color matrix adjustment, select OFF in step 2.

Color temperature

1. Select COLOR TEMP in IMAGE menu.
2. Press the ◀ or ▶ button to select USER ↵.
3. Press the ENTER button.

COLOR TEMP.-USER		
CONTRAST R	◀ 0	▶
CONTRAST B	◀ 0	▶
BRIGHTNESS R	◀ 0	▶
BRIGHTNESS B	◀ 0	▶

4. Press the ▲ or ▼ button to select the desired item.
5. Press the ◀ or ▶ button to adjust the item.
6. Repeat steps 4 and 5 for more adjustments.
7. Exit the menu system by pressing the MENU button several times.

About color temperature

There are different kinds of white color. Color temperature is a way to show the differences. The white, which temperature is low, becomes reddish white. When the color temperature is higher, the white becomes more bluish. This projector sets this color temperature by changing the numbers of contrast blue and red.
To set the color temperature high:
Set the contrast B (Blue) number high, and the contrast R (Red) number low.
To set the color temperature low:
Set the contrast B (Blue) number low, and the contrast R (Red) number high.

Adjustment from personal computer

Although this projector sets proper signal systems automatically for the image signal from personal computers, it cannot be applied to some of personal computers. In this case, press the AUTO POSITION button. If the images are still not projected correctly, use the MENU display to adjust the projected images.

XGA60		
SIGNAL		
MEMORY CALL	◀ AUTO	▶
HORIZ. POSITION	◀ 0	▶
VERT. POSITION	◀ 0	▶
FINE SYNC.	◀ 0	▶
TRACKING	◀ 0	▶
COMPUTER INPUT	◀ RGB	▶
HOLD	◀ AUTO	▶
USER ↵	MEMORIZE ↵	DELETE ↵ DEFAULT ↵

Image moved to right or left :
Adjust HORIZ. POSITION in SIGNAL menu. Press the ▶ button to move the image to left. Press the ◀ button to move the image to right.

Image moved to up or down :
Adjust VERT. POSITION in SIGNAL menu. Press the ▶ button to move the image to upward. Press the ◀ button to move the image to down.

Image flickers / Image is out of focus :
Adjust FINE SYNC. in SIGNAL menu.

SIGNAL-USER		
CLAMP POSITION	◀ 0	▶
CLAMP WIDTH	◀ 0	▶
HORIZ. PIXELS	◀ 0	▶
VERT. LINES	◀ 0	▶
VERT. SYNC.	◀ AUTO	▶
SHUTTER(U)	◀ 0	▶
SHUTTER(L)	◀ 0	▶
SHUTTER(LS)	◀ 0	▶
SHUTTER(RS)	◀ 0	▶

Wide strips appear :
Adjust CLAMP POSITION or CLAMP WIDTH of each menu in SIGNAL - USER menu.

Noise appears on right or left side of image :
Adjust SHUTTER (LS), SHUTTER (RS) or HORIZ. PIXELS of the menu in SIGNAL - USER menu.

Noise appears on top or bottom part of image :
Adjust SHUTTER (U), SHUTTER (L) or VERT. LINES of the menu in SIGNAL - USER menu.

Top part of image curves :
Change the setting of HOLD in SIGNAL menu. Select ON ↵, press the ENTER button and adjust BEGIN or END for image which top part is the least curved.

Image does not move naturally :
Adjust VERT. SYNC. of the menu in SIGNAL - USER menu. Select AUTO for normal setting. curved. Select AUTO for normal setting.

- Do not change each menu setting in USER menu for normal setting.

Simple adjustment method

1. Select HORIZ. POSITION in SIGNAL menu.
2. Press the ◀ or ▶ button to adjust the horizontal start position (the left side of image).
3. Select TRACKING in SIGNAL menu.
4. Press the ◀ or ▶ button to adjust the horizontal end position (the right side of image).
5. Repeat steps 1 to 4 for fine adjustment.
6. Select VERT. POSITION in SIGNAL menu.
7. Press the ◀ or ▶ button to adjust the vertical start position (the top end of image).

Expand

By pressing the EXPAND button on the remote control, you can magnify the detailed image of the picture. You can also view the screen displaying the picture as its original size (native resolution display).

Setting the Expand mode

1. Press the MENU button.
2. Press the ◀ or ▶ to select the FEATURE menu.
3. Press the ENTER button.
4. Press the ▲ or ▼ button to select EXPAND MODE or FRAME POSI.
5. Press the ◀ or ▶ to set the EXPAND MODE or FRAME POSI.
6. Press the MENU button twice to exit the menu system.

EXPAND MODE

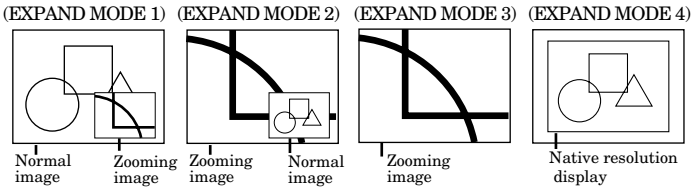

FRAME POSI.

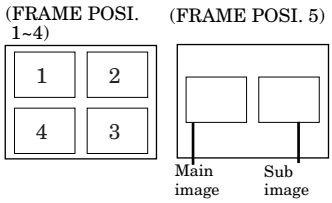

Using the Expand mode

1. Press the EXPAND button.

- You can magnify different areas of the active picture by pressing the ▲, ▼, ◀, ▶ button.
- You can change the magnification of the zoomed area by pressing the + or - button.

2. Press the EXPAND button twice on the remote control.
   The normal screen display will appear on the screen.

- **Display enlargement does not work with video input or S-video input.**
- In EXPAND mode, you cannot adjust the zoom/focus and the volume.
- The Expand mode may not function depending on the input signal. For more details, refer to page 29.

REAL screen display

- During REAL mode, Press the ◀ or ▶ buttons for fine adjustment.
- During REAL mode, the ▲ and ▼ buttons are not working. At this time, the prohibition mark (⃠) appeares on the screen.
- The expanding rate cannot be changed by pressing either the + or - button.

Picture in Picture (PinP)

One of the special features of this unit is the picture-in-picture (PinP) mode. PinP allows you to view different sources at the same time.

Using the PinP mode

1. Press the PinP button on the remote control.
   - When the image from VIDEO IN or S-VIDEO IN terminal is displayed on the screen, the image from COMPUTER IN terminal is displayed as sub-image.
   - When the image from COMPUTER IN terminal is displayed on the screen, the image from VIDEO IN or S-VIDEO IN terminal is displayed as sub-image.
2. If necessary, select the desired external input source of the image by using the VIDEO or COMPUTER button.

To switch Main image and Sub image

3. Press the ▲ or ▼ buttons on the remote control.

To change frame position

4. Press the ◀ or ▶ buttons on the remote control.

FRAME POSI.

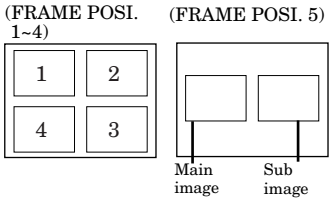

5. Press the PinP button on the remote control.
   The sub image will be disappear.

- Adjusting contrast, brightness, tint or color is not available in PinP mode.
- In PinP mode, both Main image and Sub image are displayed with their frames skipped.
- In PinP mode, the audio of the Main image is outputted.
- In PinP mode, the images may not move smoothly.
- The PinP mode may not function depending on the input signal. For more details, refer to page 29.
- The UXGA signal isn't displayed as a sub image.

Still

How to stop the picture temporarily (still picture).

1. Press the STILL button on the remote control.
   The picture will freeze temporarily.

To resume picture activity.

2. Press the STILL button on the remote control again.

Mouse remote control

By connecting to personal computer through the USB or SERIAL port, you can operate your computer with the projector remote control.

Projector + computer with USB connector

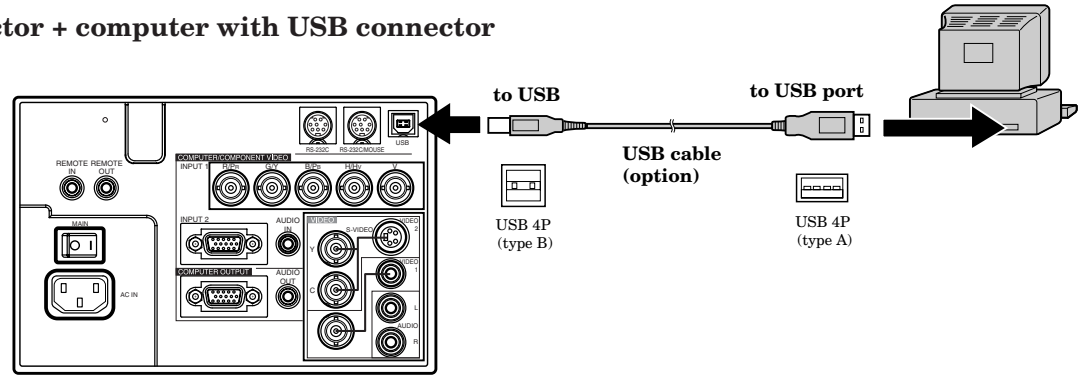

- You can use the mouse remote control function with a computer supporting USB only.
- When the lamp is turned ON, the computer connected with the USB cable may not work correctly. In this case, restart the projector and the computer. If possible, you should disconnect the USB cable when the lamp is turned ON.

Projector + computer with SERIAL port

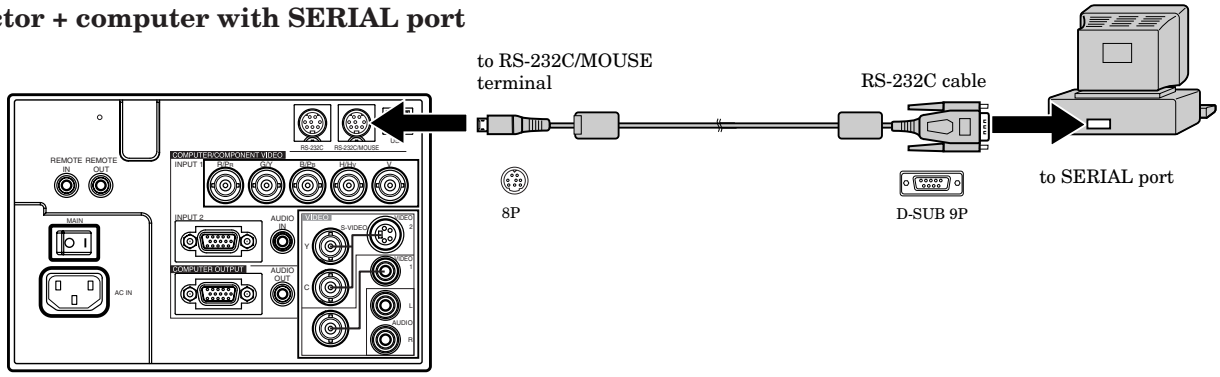

- Turn off computer and the projector before connecting with SERIAL port. When connecting the computer with the projector when the personal computer is on, the remote control does not work as a mouse. In that case, restart the personal computer.
- When the projector is connected with USB terminal and RS-232C terminal at the same time, only the terminal which the projector recognizes first will work.
- When you use the RS-232C cable together with an extension cable, the function may not work correctly.

Operation

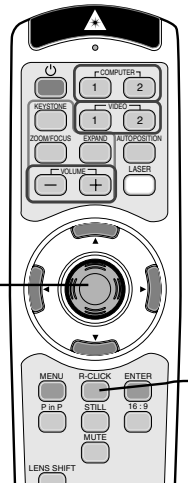

mouse pointer
Use to move the cursor on the image, instead of the computer mouse.

R-CLICK
This operates in the same way as the right button on the computer mouse.

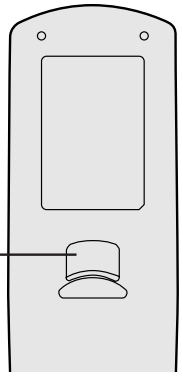

left click
This operates in the same way as the left button on the computer mouse.

Lamp replacement

The lamp is designed to project the image on the LCD panels. When the lamp no longer functions, replace it with a new one.

Caution:
- Do not remove the lamp immediately after using the projector, you may get burned because of the high temperature of the lamp.
- When you replace the lamp, press the power button to power off, then wait for 120 seconds in stand-by mode to allow the lamp and LCD panels to cool. Turn off the main switch, unplug the power cord from the outlet, and wait one hour so that the lamp is cooled to the touch.
- Do not remove the lamp except for replacement. Careless treatment can cause injury or fire.
- Do not touch the lamp element directly. It may break and cause you to injure or burn yourself.
- Be sure not to drop the lamp lid screw into the projector. Also be sure not to insert metal or any flammable objects, it may cause fire or electric shock. If any objects are inserted, please unplug and contact your dealer.
- Install the lamp securely, failure may cause a fire.
- If the light bulb part breaks, some small glass fragments may fall out through the small cooling grill, and sticks to the inside of projector or the lamp box. When taking the lamp out, make sure to turn over the projector and hold the handle of the lamp box to avoid injury from the glass fragments.
- Never shake the lamp or hold it in front of your face after removing the lamp box. The glass fragments may fall out and cause injuries to your eyes and so on.

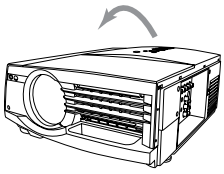

1. Reverse the projector gently.
2. Loosen the screws of the lamp lid (a) using a Phillips screwdriver (+), and remove the lid.
   - Remove the lamp cover in the direction of the arrow as indicated.

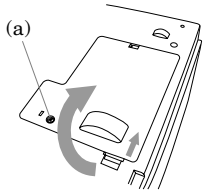

3. Loosen screws (b) using a Phillips screwdriver (+), and remove them.
4. Pull up the handle.
5. Hold onto the projector by the handle as you pull out the lamp.
   - Pull the lamp out of the projector slowly. Should the light bulb be broken, glass fragments will spill out if the lamp is pulled out too quickly.
   - Once the lamp has been removed, do not spill liquid on it, place it near flammable objects or where children can touch it. Otherwise, it will cause injury or fire.
6. Insert the new lamp securely into the projector body in the right direction.

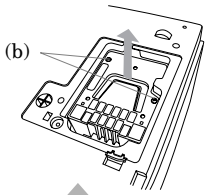

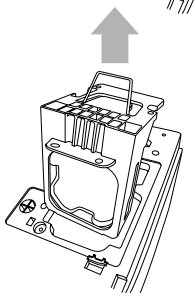

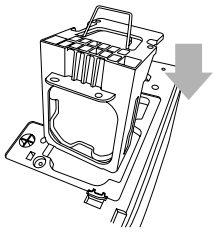

7. Put the handle back to the holding point.
   - Make sure that the handle is locked.
8. Tighten up the screws (b) using a Phillips screwdriver (+).

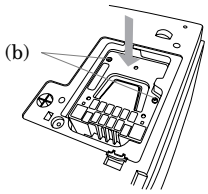

9. Tighten up the screws of the lamp lid using a Phillips screwdriver (+).

How to reset the operation time meter
Plug in the power cord, switch on the projector, and reset lamp time by pressing the ◀, ▶ and POWER buttons on the contro panel simultaneously.

Important:
- If the 3 buttons was not pressed at the same time, the lamp time may not be reset.
- Please confirm the TEMP indicator illuminates about 2 seconds and the lamp time has been reset.
- The projector will not turn on if you do not secure the lamp lid.
- You must reset the operation time meter after you replace the lamp.
- Do not reset the operation time meter unless the lamp has been replaced.

Caution:
- Do not spill liquid on the lamp or place it near flammable objects or where children can touch it. Otherwise, it could cause injury or fire.
- Be sure that the projector guide is firmly inserted between the right and left lamp guides.

Interval of the lamp replacement

The interval of the lamp replacement about 1,500 hours of consecutive use. Replacement span may differ according to operating environment, and may be shorter than 1,500 hours. Decreases in luminescence and/or color brightness will indicate that the light source lamp needs to be replaced. When lamp operation time exceeds 1,000 hours*1, the indicator will flash alternately between green and red (while the lamp is in operation; when the lamp is not in operation, the indicator will appear red only) and the lamp replacement message will appear on the screen for one minute everytime the power is turned on. When the lamp has been used for about 1,400 hours*1, the replacement message (LAMP:>1400H) will appear on the screen for one minute everytime 10 hours after. When the lamp has been used for about 1,500 hours*1,*2, the projector will automatically shut off for safety and the power indicator light will be red. The projector cannot be used until the lamp has been replaced and operation timer has been reset.

Caution:
- The lamp is fragile. If broken, be careful not to cut yourself with glass fragments.
- The replacement span of the lamp depends on the environment. For replacement lamps, please contact your dealer.

The projector automatically shuts off when the lamp is used up in about 1,500 hours*1,*2 and cannot be used until the lamp is replaced and the internal timer is reset.

*1) When LAMP MODE of the INSTALLATION menu is set to STANDARD.
*2) When LAMP MODE is set to LOW, the duration will be extended maximum up to 2,000 hours.

Caution:
Be sure to turn off the projector and unplug the power cord from the wall outlet before you perform any maintenance on the projector.

Cleaning the air-filter

Clean the air-filter frequently (about once a month). If the filter or ventilation slots become clogged with dirt or dust, the temperature inside of the projector may rise and cause some troubles, such as damage of inside parts, and shortening the life of panel.

- When the temperature inside of the projector rises, the TEMP indicator blinks in red, and the power will be shut off to be stand-by which LAMP indicator is turned off.

1. To remove the filter cover, slide the cover in the direction of the arrow.

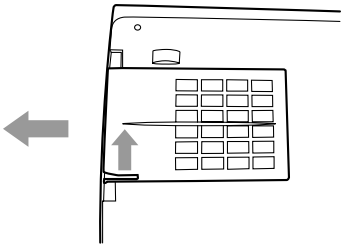

2. Remove the air-filter from the filter cover.

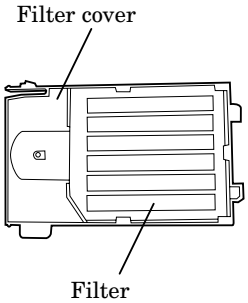

3. Wash the air-filter or change to the new filter.
   - Use water or a mild detergent diluted with water to clean the filter. Rinse the filter thoroughly and let it dry completely.

4. Attach the air-filter to the filter cover.

5. Attach the filter cover to the projector.
   - Make sure that the air-filter is attached correctly without displacement.

Important:
- If the filter is damaged or becomes extremely dirty, change to the provided new filter. If you wish to another new filter, contact your dealer for replacement.
- The power will not turn on if the air-filter cover is improperly installed.

Caution:
Be sure to use the projector with an air-filter. If not, dust may get inside the projector, causing a fire or a breakdown.

Cleaning the projector and the ventilation slots

Use a soft cloth to clean the projector and the ventilation slots. When the slots become dirty, wipe them with a soft cloth dampened with a diluted mild detergent, and then wipe them with a dry cloth.

- Clean the inside of the terminal cover frequently as dust is apt to be collected.

To protect the surface of the projector from fading or deteriorating:
- Do not spray insecticide on or inside the projector.
- Do not use benzine or thinner to clean it.
- Do not let rubber or plastic materials come into contact with the projector.

Cleaning the lens

Use a standard lens-cleaning brush or a piece of lens tissue dampened with lens cleaning fluid. The lens surface is fragile. Use only recommended, nonabrasive lens-cleaning materials. Do not touch the lens with your fingers.

About the terminal cover (with Anti-Theft Alarm device)

This projector includes a terminal cover with Anti-Theft Alarm device. Once the terminal cover is installed, its Anti-Theft Alarm device will detect vibration caused by the projector being moved and emit an alarm.

- Mitsubishi assumes no responsibility or liability for theft or other damages.

Procedure for setting the Anti-Theft Alarm device

Insert dry cell batteries into the theft warning device

1. Open the battery cover of the theft warning device.
2. Check the (+) and (-) ends of the battery, and insert it from the (-) end first.

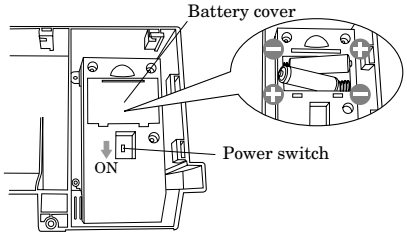

- Inserting the battery from the (+) end makes it difficult to fit the (-) end into the coil spring. Forcing in the battery in such a position may shred the outside label, causing a short circuit and overheating.
- Please refer to page 8 for information on how to handle dry cell batteries.

3. Close the battery cover.

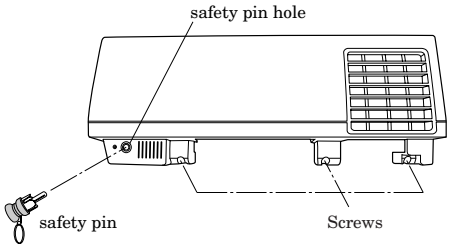

4. Insert the included safety pin into the safety pin hole.

- If the safety pin is not inserted, the vibrations and shocks of normal use may cause the alarm to sound.

5. Turn the power switch ON.

Install the terminal cover

1. Insert the four tabs on the terminal cover into the holes on the projector's side.
2. Slide the terminal cover toward the back of the projector.

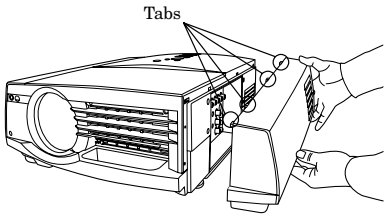

3. Tighten the three screws that keep the terminal cover in place.
4. Install the projector in a specified location.
5. Press the battery level check button until you hear a buzzer sound.
6. Remove the safety pin.
   The Anti-Theft Alarm device is now in standby.

- This package includes a sticker which shows that the Anti-Theft Alarm device is active. Visible placement of this sticker is recommended.
- To temporarily halt the Anti-Theft Alarm device, insert the safety pin.
- Vibrations will not cause the alarm to sound for several seconds after the power switch is turned ON.
- Vibrations will not cause the alarm to sound for several seconds after the safety pin is removed.
- Vibrations and shocks from earthquakes may cause the alarm to sound. In such situations, insert the safety pin to halt the alarm.
- Batteries may come loose during transportation. Please remove them beforehand.

Procedure for changing batteries

How to check battery level

Use a pointed object to push the battery level check button.

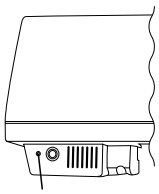

- A buzzer will sound while the button is being pushed. If there is no buzzer sound, then batteries need to be changed.
- Sounding the buzzer for a long time will consume battery power.

Change the dry cell batteries

1. Insert the safety pin into the safety pin hole.
2. Loosen the three screws that keep the terminal cover in place.
3. Slide the terminal cover toward the front of the projector.
4. Pull the terminal cover toward you and remove it.

- Attention must be paid when removing the terminal cover as there could be foreign objects inside.
- Removal of dust found inside the terminal cover is recommended when changing batteries.

5. Open the battery cover and remove the old dry cell batteries.
6. Check the (+) and (-) ends of the new battery, and insert it from the (-) end first.

- Use alkaline AA batteries.
- Standard battery life is approx. six months (when using alkaline dry cell batteries). Please check the battery level and change batteries regularly.

7. Close the battery cover.

Troubleshooting

The following offers solutions to some of the common problems you may encounter. We suggest that you consult this chart before contacting your dealer.

PROBLEMS	CAUSE	POSSIBLE SOLUTIONS
The power is off.	• The air inlet slots, outlet slots or air filter is clogged with dust or some objects. **POWER indicator does not light up.** • Power cord is unplugged from the outlet. • Power cord is disconnected from the projector. • The main switch is turned off. • The lamp lid is open. **POWER indicator blinks red.** • The projector has been turned on again too soon after having been turned off. • When the power switch was turned off while the fan was running, during or after lamp operation. • The room temperature is too high. (Does the LAMP indicator show an unusual condition?) • Lamp is no longer working. **POWER indicator blinks between red and green.** • The filter cover is not closed. • When the LAMP indicator or the TEMP indicator is either on or blinking, the main unit requires repairs.	• Remove the object. • Plug the power cord into the outlet. • Insert the power cord into the projector. • Turn the main switch on. • Close the lamp lid. • Wait for the lighting sequence. • Turn the power switch on and off several times. • Refer to "Indicators" on page 26. • Replace the lamp with a new one. • Close the cover correctly. • Contact your dealer.
No picture appears on the screen.	• Lens is covered by lens cap. • When the LAMP indicator or the TEMP indicator is either on or blinking, the main unit requires repairs. • The equipment connected to this projector is not turned on. • Hookup is not made correctly with other equipment. • The input source is not selected correctly. • An extension cord is being used instead of the supplied cable.	• Take the lens cap off. • See page 26. • Turn on the connected equipment. • Confirm the hookup. • Select the correct source according to the equipment connected to this projector. • Check whether the image is displayed correctly by replaceing it with the supplied cable. When the image is displayed correctly, use the extension cord along with an RGB signal amplifier.
The image is turned off.	• The air inlet slots, outlet slots or air filter is clogged with dust or some objects. (In this case, the TEMP indicator does not light up.)	• Remove the object and turn off the main power switch. After about 10 minutes, Turn the projector on.
The image is distorted.	• The projector is not at a right angle to the screen.	• Adjust the angle of the projector to make a right angle to the screen. See page 12.
The image is dark.	• Brightness, tint and color are not adjusted correctly.	• Adjust brightness, tint and color correctly. See page 18.
The image is blurred.	• The projecting distance is beyond the focused area. • Lens is dirty. • Screen size exceeds screen size specifications. • Brightness and contrast are not adjusted correctly. • FINE adjustment is not made correctly. • Tracking is not adjusted. • The projector is not at a right angle to the screen. • The output resolusion of the computer exceeds the resolution of the projector. • Keystone adjustment is used.	• Adjust the projecting distance. See page 9. • Clean lens. • Reduce screen size to within 60" to 300". • Adjust brightness, contrast. • Make FINE adjustment. • Adjust tracking. See page 17. • Adjust the angle of the projector to make a right angle to the screen. See page 12. • Adjust the output resolution of the computer to the resolution of the projector. (See page 29.) For changing the output resolution of the computer, contact the computer manufacturer. • When you use the keystone adjustment, graphics or characters may be blurred in some images. In this case, use the projector with using the keystone adjustment disabled. (See page 12.)
The afterimage remains.	• When a stationary image is projected for a long time, its afterimage may persist on the screen. This is not a failure, and the afterimage will disappear in a few minutes.	
Only the motion area in the image supplied from the computer is not displayed.	• This is caused by a problem of the computer. Contact the computer manufacturer.	
Red, blue or green dots are viewed on the text of image.	• It is normal.	
The image is distorted on the screen and noise is heard.	• The cable for connection with other equipment is not plugged securely into the terminal. • The projector is installed too close to other equipment.	• Plug the connecting cable securely into the terminal. See pages 10-11. • Install the projector far away from other equipment.
No sound is heard.	• Volume is not turned up. • Connection to other equipment is not made correctly.	• Turn up the volume. • Check connections. See pages 10-11.
Nothing is displayed on the PC monitor.	• The PC monitor is not turned on.	• Turn on the monitor.
Warm air comes out of the exhaust vents.	• This is typical of the LCD projector.	
Adjustments cannot be made.	• The operation is incorrectly made due to noise or interference.	• Press the reset button on the Terminal board. See page 15.
⊘ is displayed.	• This mark is displayed when an invalid operation is executed (for example, when the COMPUTER or VIDEO button is pressed while the menu is displayed). This is not failure.	

Indicators

The projector has three indicators each of which shows the working condition of the projector.
The following offers solutions to possible problems. If a problem persists, turn the projector off and consult your dealer.

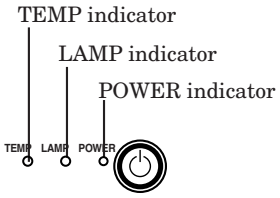

Normal condition

POWER	LAMP	TEMP	CONDITION	Notes
Steady red	Off	Off	Stand-by	
Steady green	Blinking green	Off	Lamp stand-by (about for 1 minute)	The power button cannot be used to switch OFF.
Steady green	Steady green	Off	The POWER is ON. (Normal condition)	

Abnormal condition

POWER	LAMP	TEMP	CONDITION	POSSIBLE SOLUTIONS
Steady green ↓ Steady red	Steady green ↓ Off	Blinking red ↓ Blinking red	Unusual temperature • The ventilation slits or air filter is clogged with dust or debris. • The room temperature is too high. • The filter is dirty.	• Remove the object from the ventilation slits. • Relocate the projector to a cooler place. • Clean the filter.
Steady red	Blinking green	Off	The protection circuit is working or the lamp is in an abnormal condition. (The indicators operate as shown on the left at the time of power-off, too. In this case, they are'nt indicating an abnormal condition.)	• Wait until the LAMP indicator is turned off, then press the POWER button. • If the above operation is not effective, replace the lamp.
Steady green	Blinking green/red	Off	Lamp duration warning. (Lightning duration total about 1, 000 hours*.When the POWER is ON.)	Replace the lamp. Exchange with a new lamp if the same problem recurs.
Steady red	Blinking red	Off	Lamp duration warning. (Lightning duration total about 1, 000 hours*.When the POWER is OFF.)	
Steady red	Steady red	Off	Lamp duration warning. (Lightning duration total about 1,500 hours*.)	
Blinking green/red	Off	Off	The lamp or filter cover is not closed.	Close the cover correctly.
Blinking green/red	Steady or Blinking	Steady or Blinking	Abnormal.	Contact your dealer.

*) When LAMP MODE of the INSTALLATION menu is set to STANDARD.When it is set to LOW, the duration will be extended.

Specifications

Type	LCD projector
Model	XL5950U|XL5950LU|XL5900U|XL5900LU
Rated power supply	AC100 - 240V, 50 / 60Hz
Rated input	3.8 A
LCD panels	1.3-inch LCD panel: 3 pieces (for R, G, B) Pixels 1,024 × 768 = 786,432 pixels Total 2,359,296 pixels Active pixel rate: 99.99 % or more (each panel)
Colors	16,770,000 colors
Projection lens	F 1.8 - 2.1*1 f = 51 - 64 mm*1
Light source lamp	270 W SHP
Picture size	60 - 300 inch*1 (aspect ratio 4:3)
PC compatibility	Resolution : 640 x 400 (Expand) - 1024 x 768 (Real) - 1600 x 1200 (Compress) Sync on Green available
Video compatibility	NTSC / NTSC 4.43 / PAL (including PAL-M, N) / SECAM, PAL-60 DVD (Component) / HDTV (1080i) / 720p / (525p)
Audio output	5 W Mono
Speaker	Round type (4Ω 5W) × 1
S-video input	Luminance signal: 1.0 Vp-p 75Ω (negative sync.) Chroma signal: 0.286 Vp-p 75Ω (burst signal)
Video input	1.0 Vp-p 75Ω (negative sync.)
Audio inputs	150 mVrms, 10kΩ or more
Analog RGB input (mini D-SUB 15P/BNC)	RGB: 0.7Vp-p 75Ω (negative sync.) $YP_BP_R(YC_BC_R)$: Y:1.0Vp-p (negative sync.) $P_BP_R(C_BC_R)$:0.7Vp-p HD/CS : TTL level (positive or negative) VD : TTL level (positive or negative)
PC audio input	150 mVrms, 10kΩ or more ø3.5mm stereo mini jack
Control connector	Serial (8 pin connector) RS-232C standards USB terminal for Mouse, Wired remote terminal
Outside dimensions	371 × 176 × 434 mm*2 (width × height × depth) Legs and lens are included. 443 × 176 × 434 mm*2 (width × height × depth) (with Terminal cover)
Weight	Approx. 8.5kg*2 Approx. 9.0kg*2 (with Terminal cover)
Length of power cord	118 inch (3.0m)
Temperature, humidity (performance guarantee)	+41°F (+5°C) - +104°F (+40°C), 30~90%

*1) For XL5950U and XL5900U only. For XL5950LU and XL5900LU, please refer to page 30.

*2) For XL5950U and XL5900U only.

Kensington Lock

This projector has a Kensington Security Standard connector for use with a Kensington MicroSaver Security System. Refer to the information that came with the Kensington System for instructions on how to use it to secure the projector. Please contact to Kensington Technology Group as shown below.

Kensington Technology Group
2855 Campus Drive
San Mateo, CA 94403, U.S.A.

Phone : (650)572-2700 Fax : (650)572-9675

Connectors

RS-232C (8P)

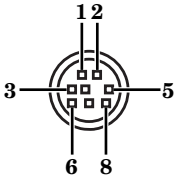

PIN No.	NAME	I/O	
1	TXD	IN	
2	–	–	
3	DTR	IN	*
4	GND	–	
5	CTS / 5V	IN/OUT	*
6	DCD / CLOCK	OUT	*
7	RXD	OUT	
8	RI / DATA	OUT	*

*: For RS-232C/MOUSE terminal

COMPUTER IN/OUT
(Mini D-SUB 15P)

PIN No.	SPEC
1	R(RED)/CR
2	G(GREEN)/Y
3	B(BLUE)/CB
4	GND
5	GND
6	GND
7	GND
8	GND
9	–
10	GND
11	GND
12	DDC Data
13	HD/CS
14	VD
15	DDC Clock

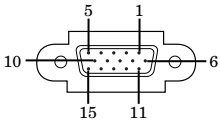

Dimensional drawings (mm)

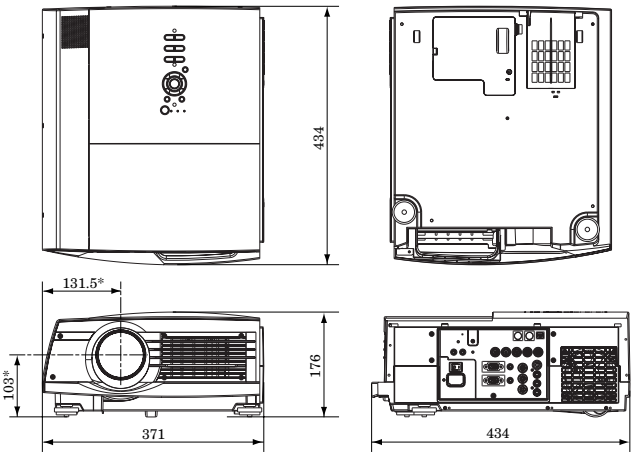

* Factory-defaults of XL5950U and XL5900U

With Terminal cover

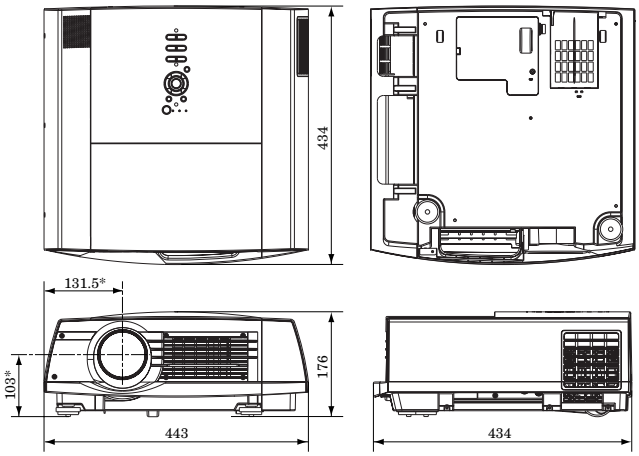

* Factory-defaults of XL5950U and XL5900U

What's included in the box

2	AC power cord	246C483-10
		246C383-20
1	Audio/Video cable	246C381-10
1	RGB cable for PC	246C448-10
2	RS-232C cable	246C447-10
1	Terminal cover (with Anti-Theft Alarm device)	955B288-01
2	Safety pin	450D057-10
1	Sticker for Anti-Theft Alarm	853C588-10
1	Filter	620D119-10
1	Remote control	939P955-10
1	Quick reference card	857D050-10
4	Battery	–
1	Safety manual	871D389-10
1	CD-ROM	919C132-10

Replacement part (Option / Not included in the box)

Spare marcury lamp	499B035-10
	(VLT-XL5950LP)

Specification of RGB signals in each computer mode of the projector

Signal mode	resolution (H x V)	horizontal frequency (kHz)	Vertical frequency (Hz)	Normal mode (H x V)	Real mode (H x V)	
TV60	–	15.73	59.94	1024 x 768	–	*1
TV50	–	15.63	50.00	1024 x 768	–	*1
1080i	–	33.75	60.00	1024 x 576	–	
525p	–	31.47	59.54	1024 x 768	–	
625p	–	31.25	50.00	1024 x 768	–	
720p	–	45.00	60.00	1024 x 576	–	
PC98	640 x 400	24.82	56.42	1024 x 640	640 x 400	
CGA70	640 x 400	31.47	70.09	1024 x 640	640 x 400	
CGA84	640 x 400	37.86	84.14	1024 x 640	640 x 400	
CGA85	640 x 400	37.86	85.08	1024 x 640	640 x 400	
VGA60	640 x 480	31.47	59.94	1024 x 768	640 x 480	
VGA72	640 x 480	37.86	72.81	1024 x 768	640 x 480	
VGA75	640 x 480	37.50	75.00	1024 x 768	640 x 480	
VGA85	640 x 480	43.27	85.01	1024 x 768	640 x 480	
VGA120	640 x 480	61.89	120.17	1024 x 768	640 x 480	
SVGA56	800 x 600	35.16	56.25	1024 x 768	800 x 600	
SVGA60	800 x 600	37.88	60.32	1024 x 768	800 x 600	
SVGA72	800 x 600	48.08	72.19	1024 x 768	800 x 600	
SVGA75	800 x 600	46.88	75.00	1024 x 768	800 x 600	
SVGA85	800 x 600	53.67	85.06	1024 x 768	800 x 600	
SVGA95	800 x 600	59.97	94.89	1024 x 768	800 x 600	
SVGA120	800 x 600	77.11	119.93	1024 x 768	800 x 600	
XGA43i	1024 x 768	35.52	86.96	1024 x 768	–	*1
XGA60	1024 x 768	48.36	60.00	1024 x 768	1024 x 768	
XGA70	1024 x 768	56.48	70.07	1024 x 768	1024 x 768	
XGA75	1024 x 768	60.02	75.03	1024 x 768	1024 x 768	
XGA85	1024 x 768	68.68	85.00	1024 x 768	1024 x 768	
XGA120	1024 x 768	98.58	119.78	1024 x 768	1024 x 768	
SXGA70a	1152 x 864	63.85	70.01	1024 x 768	1024 x 768	
SXGA75a	1152 x 864	67.50	75.00	1024 x 768	1024 x 768	
SXGA85a	1152 x 864	77.49	85.06	1024 x 768	1024 x 768	
SXGA60b	1280 x 960	60.00	60.00	1024 x 768	1024 x 768	
SXGA75b	1280 x 960	75.00	75.00	1024 x 768	1024 x 768	
SXGA85b	1280 x 960	85.94	85.00	1024 x 768	1024 x 768	
SXGA43i	1280 x 1024	46.43	86.87	1024 x 768	–	*1
SXGA60	1280 x 1024	63.98	60.02	1024 x 768	1024 x 768	
SXGA75	1280 x 1024	79.98	75.03	1024 x 768	1024 x 768	
SXGA85	1280 x 1024	91.15	85.02	1024 x 768	1024 x 768	
MAC13	640 x 480	35.00	66.67	1024 x 768	640 x 480	
MAC16	832 x 624	49.72	74.55	1024 x 768	832 x 624	
MAC19	1024 x 768	60.24	75.02	1024 x 768	1024 x 768	
MAC21	1152 x 870	68.59	74.96	1024 x 768	1024 x 768	
HP75	1024 x 768	62.94	74.93	1024 x 768	1024 x 768	
HP72	1280 x 1024	78.13	72.00	1024 x 768	1024 x 768	
SUN66a	1152 x 900	61.85	66.00	1024 x 768	1024 x 768	
SUN76a	1152 x 900	71.81	76.64	1024 x 768	1024 x 768	
SUN66	1280 x 1024	71.68	66.68	1024 x 768	1024 x 768	
SUN76	1280 x 1024	81.13	76.11	1024 x 768	1024 x 768	
SGI72	1280 x 1024	76.92	72.30	1024 x 768	1024 x 768	
SGI76	1280 x 1024	82.01	76.00	1024 x 768	1024 x 768	
IBM60	1280 x 1024	63.42	60.00	1024 x 768	1024 x 768	
UXGA	1600 x 1200	75.00	60.00	1024 x 768	–	*1

*1 : The Expand mode and the PinP mode don't function with this signal.

- When the EXPAND MODE of FEATURE menu is set to real screen display, by pressing the EXPAND button on the remote control, it will switch to the screen displaying the picture as its original size (real screen display). In the real screen display, pictures will be black-framed when picture resolution is lower than 1,024 x 768.

Important:

- Some computers may not be compatible with the projector.
- The projector's maximum resolution is 1,024 x 768 pixels. It may not display correctly for the pictures of higher resolutions than 1,024 x 768.
- The picture with a SYNC on G (Green) signal may jitter.
- The picture with a SYNC on G (Green) signal may be tinged with green.
- If the resolution and frequency of your computer are not shown on the table, change the resolution of your computer. You may find the compatible resolution and frequency.
- Set the COMPUTER INPUT in SIGNAL menu to RGB, when inputting the HDTV signal as RGB signal.
- In case of the SXGA, the right side of the image may not appear. In this case, adjust the TRACKING in the SIGNAL menu.

Specification of the attached lens (for XL5950LU and XL5900LU)

With Short Throw Zoom Lens (OL-X500SZ)

F No. F2.0 - F2.3
Focal distance f=37 mm - 44 mm
Zoom/Focus Electrical drive (Zoom ratio 1.2 : 1)
Picture size 40 inch (81 cm X 61 cm) - 300 inch (610 cm X 457 cm) (aspect ratio 4:3)

Screen						Distance from the screen : L				Lens shift height				Lens shift width : W	
Diagonal size		Width		Height		Maximum zoom (WIDE)		Minimum zoom (TELE)		Standard : I		Movement Distance : H			
inch	cm	inch	cm	inch	cm	inch	m	inch	m	inch	cm	inch	cm	inch	cm
40	102	32	81	24	61	42	1.1	51	1.3	1.2	3.0	11.2	28.3	1.7	4.2
60	152	48	122	36	91	64	1.6	77	2.0	1.8	4.6	16.6	42.0	2.5	6.2
80	203	64	163	48	122	86	2.2	104	2.6	2.4	6.1	22.0	55.8	3.3	8.3
100	254	80	203	60	152	108	2.7	130	3.3	3.0	7.6	27.4	69.5	4.1	10.3
150	381	120	305	90	229	163	4.1	196	5.0	4.5	11.4	40.9	103.8	6.1	15.4
200	508	160	406	120	305	218	5.5	263	6.7	6.0	15.2	54.4	138.1	8.1	20.5
250	635	200	508	150	381	272	6.9	329	8.4	7.5	19.1	67.9	172.4	10.1	25.5
300	762	240	610	180	457	327	8.3	-	-	9.0	22.9	81.4	206.6	12.1	30.6

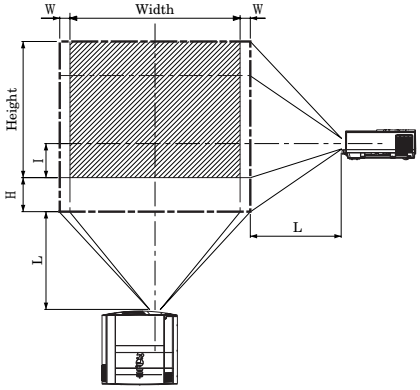

- The above numbers are approximate, and may be slightly different from the actual measurements.

With Long Throw Zoom Lens (OL-X500LZ)

F No. F2.5 - F3.2
Focal distance f=64 - 90mm
Zoom/Focus Manual drive (Zoom ratio 1.4 : 1)
Picture size 80 inch (163 cm X 122 cm) - 300 inch (610 cm X 457 cm) (4:3)
(Recommended) 80 inch (163 cm X 122 cm) - 200 inch (406 cm X 305 cm) (4:3)

Screen						Distance from the screen : L				Lens shift height				Lens shift width : W	
Diagonal size		Width		Height		Maximum zoom (WIDE)		Minimum zoom (TELE)		Standard : I		Movement Distance : H			
inch	cm	inch	cm	inch	cm	inch	m	inch	m	inch	cm	inch	cm	inch	cm
80	203	64	163	48	122	151	3.8	209	5.3	2.4	6.1	22.0	55.8	3.3	8.3
100	254	80	203	60	152	190	4.8	264	6.7	3.0	7.6	27.4	69.5	4.1	10.3
150	381	120	305	90	229	287	7.3	400	10.2	4.5	11.4	40.9	103.8	6.1	15.4
200	508	160	406	120	305	384	9.7	537	13.6	6.0	15.2	54.4	138.1	8.1	20.5
250	635	200	508	150	381	481	12.2	674	17.1	7.5	19.1	67.9	172.4	10.1	25.5
300	762	240	610	180	457	578	14.7	810	20.6	9.0	22.9	81.4	206.6	12.1	30.6

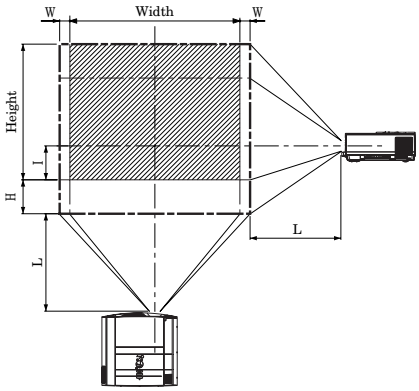

- The above numbers are approximate, and may be slightly different from the actual measurements.

with Tele Throw Zoom Lens (OL-X500TZ)

F No. F2.5 - F3.4
Focal distance f=93 - 140mm
Zoom/Focus Manual drive (Zoom ratio 1.5 : 1)
Picture size 80 inch (163 cm X 122 cm) - 300 inch (610 cm X 457 cm) (4:3)
(Recommended) 80 inch (163 cm X 122 cm) - 200 inch (406 cm X 305 cm) (4:3)

Screen						Distance from the screen : L				Lens shift height				Lens shift width : W	
Diagonal size		Width		Height		Maximum zoom (WIDE)		Minimum zoom (TELE)		Standard : I		Movement Distance : H			
inch	cm	inch	cm	inch	cm	inch	m	inch	m	inch	cm	inch	cm	inch	cm
80	203	64	163	48	122	220	5.6	329	8.4	2.4	6.1	22.0	55.8	3.3	8.3
100	254	80	203	60	152	276	7.0	414	10.5	3.0	7.6	27.4	69.5	4.1	10.3
150	381	120	305	90	229	418	10.6	627	15.9	4.5	11.4	40.9	103.8	6.1	15.4
200	508	160	406	120	305	560	14.2	839	21.3	6.0	15.2	54.4	138.1	8.1	20.5
250	635	200	508	150	381	701	17.8	1051	26.7	7.5	19.1	67.9	172.4	10.1	25.5
300	762	240	610	180	457	843	21.4	1263	32.1	9.0	22.9	81.4	206.6	12.1	30.6

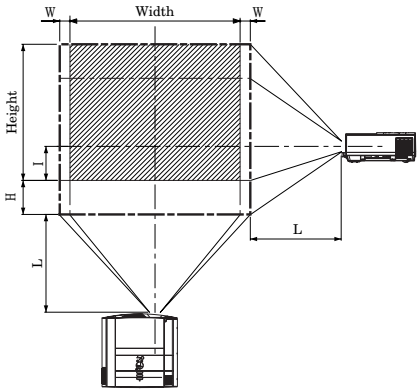

- The above numbers are approximate, and may be slightly different from the actual measurements.

With Rear projection Short Throw (OL-X500FR)

F No.	F2.5
Focal distance	f=22mm
Focus	Manual drive
Picture size	50 inch (102 cm X 76 cm) - 200 inch (406 cm X 305 cm) (4:3)
(Recommended)	70 inch (142 cm X 107 cm) - 100 inch (203 cm X 152 cm) (4:3)

Screen						Distance from the screen : L	
Diagonal size		Width		Height			
inch	cm	inch	cm	inch	cm	inch	m
50	127	40	102	30	76	31	0.8
70	178	56	142	42	107	45	1.1
85	216	68	173	51	130	55	1.4
100	254	80	203	60	152	65	1.7
150	381	120	305	90	229	100	2.5
200	508	160	406	120	305	134	3.4

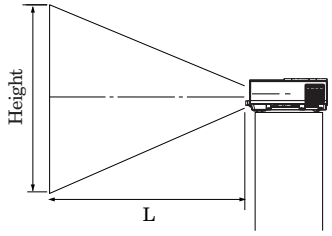

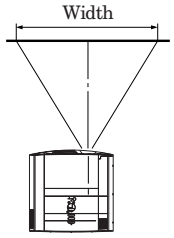

- The above numbers are approximate, and may be slightly different from the actual measurements.

- Projection not recommended in size will increase distortion and reduce the resolution.
- The adjustable angle in the keystone adjustment with the lens differs from that with the XL5950U or XL5900U lens.
- In the keystone adjustment with the lens, the aspect ratio of 4:3 may not be obtained.

MITSUBISHI Projector Contact Information

North America

MESCA (Mitsubishi Electric Sales Canada Inc.)
http://www.mitsubishielectric.ca
Information Technologies Group, 4299 14th Avenue, Markham, Ontario L3R 0J2, Canada

Sales	Phone	:+1-(905) 475-7728
	Fax	:+1-(905) 475-7958
	E-mail	:projectors@mitsubishielectric.ca
Technical	Phone	:+1-(905) 475-7728
	Fax	:+1-(905) 475-7958
Customer Care		
	E-mail	:support@mitsubishielectric.ca

MDEA (Mitsubishi Digital Electronics America, Inc.
(Warranty Registration)
http://www.mitsubishi-presentations.com/
Presentation Products Division, 9351 Jeronimo Road, Irvine, CA 92618 U.S.A

Phone	Main Line	:+1-(949) 465-6000
	Technical	:+1-(888) 307-0309
	Product Information	:+1-(888) 307-0312

Technical Support
E-mail :tsupport@mdea.mea.com

Europe

MEU-FRA (Mitsubishi Electric Europe B.V French Branch)
25, Boulevard des Bouvets 92 741, Nanterre CEDEX, France

Sales	Phone	:+33 (0)1 55-68-55-07
	Fax	:+33 (0)1 55-68-57-31
Technical	Phone	:+33 (0)1 41-02-83-24
	Fax	:+33 (0)1 49-01-07-23

MEU-GER (Mitsubishi Electric Europe B.V. German Branch)
http://www.mitsubishi-evs.de/
Gothaer Strasse 8, 40880 Ratingen, Germany

MEU-IR (Mitsubishi Electric Europe B.V. Irish Branch)
http://www.mitsubishi.ie/
Westgate Business Park, Ballymount, Dublin 24, Ireland

Sales	Phone	:+353-(0)1- 4198844
	Fax	:+353-(0)1-4564422
Technical	Phone	:+353-(0)1-4198807
	Fax	:+353-(0)1-4198895

MEU-IT (Mitsubishi Electric Europe B.V. Italian Branch)
Centro Direzionale Colleoni, Palazzo Persero-Ingresso 2, Via Paracelso 12, 20041 Agrate Brianza, Italy

Sales	Phone	:+39-(0)39-60531
	Fax	:+39-(0)39-6053214
	E-mail	:info.projector@it.mee.com

MEU-NL (Mitsubishi Electric Europe B.V. Benelux Branch)
http://www.mitsubishi.nl/LCD/ProdFrame.html
Nijverheidsweg 23a, 3641 RP Mijdrecht, The Netherlands

Sales	Phone	:+31-297-282461
	Fax	:+31-297-283936
	E-mail	:info.lcd@nl.mee.com
Technical	Phone	:+31-297-282461
	Fax	:+31-297-283936
	E-mail	:info.lcd@nl.mee.com

MEU (MITSUBISHI ELECTRIC EUROPE B.V.)
http://www.mitsubishi-projector.ru/
Moscow Representative Office, 12/1 Goncharnaya St. 109240, Moscow, Russia

Sales	Phone	:+7 (095) 915 8602
	Fax	:+7 (095) 915 8603

MEU-SP (Mitsubishi Electric Europe B.V. Spanish Branch)
http://www.mitsubishi-electric.es/
Ctra. de Rubi, 76-80, 08190 Sant Cugat del Valles, Barcelona, Spain

Sales	Phone	:+34-93.565.31.54
	Fax	:+34-93.589.43.88
	E-mail	:mitsubishi.profesional@sp.mee.com
Technical	Phone	:+34-93.586.27.51
	Fax	:+34-93.699.74.45
	E-mail	:mitsubishi.profesional@sp.mee.com

MEU-SWE (Mitsubishi Electric Europe B.V Scandinavian Branch)
Hammarbacken 14, Box 750, S-19127, Sollentuna, Sweden

Sales	Phone	:+46-(0)8-6251070
	Fax	:+46-(0)8-6251036
Technical	Phone	:+46-(0)8-6251052
	Fax	:+46-(0)8-6251036

MEU-UK (Mitsubishi Electric Europe)
http://www.mitsubishi.co.uk/evs/
Visual Information Systems Division, Travellers Lane, Hatfield, Hertfordshire, AL10 8XB

Sales	Phone	:+44 (1707) 278684
	Fax	:+44 (1707) 278541
	E-mail	:projector.info@meuk.mee.com
Technical	Phone	:+44 (870) 606 5008
	Fax	:+44 (1506) 431927
	E-mail	:projector.info@meuk.mee.com

Russia (Mitsubishi Electric Europe B.V Moscow Representative Office)
52, bldg.5, Kosmodamianskaya Nab, 113054, Moscow, Russian Federation

Sales	Phone	:+7 (095) 721 2070
	Fax	:+7 (095) 721 2071
Technical	Phone	:+7 (095) 721 2070
	Fax	:+7 (095) 721 2071

Asia

RIL (Ryoden (Holdings) Ltd.)
http://www.ryoden.com.hk

- Hong Kong Office
  15/F, Manulife Tower, 169 Electric Road, North Point, Hong Kong, China
  Technical Support
  Phone :+852 6510 1750
  Fax :+852 2887 8027
- Beijing Office
  9/F, Office Tower 1, Henderson Centre, 18 Jianguomennei Dajie, Dongcheng District, Beijing, 100005, China
  Sales & Technical Support
  Phone :+86 (10) 6518 2930
  Fax :+86 (10) 6518 2530
- Shanghai Office
  10/F, Shanghai Square Office Tower, 138 Huai Hai Zhong Road, Lu Wan District, Shanghai, 200021, China
  Sales & Technical Support
  Phone :+86 (21) 6327 2228
  Fax :+86 (21) 6327 4918
- Shenzhen Office
  Unit 01-04, 13/F, Building A, Tian An International Building, Renmin Road South, Shenzhen, 518005, China
  Sales & Technical Support
  Phone :+86 (755) 518 6386
  Fax :+86 (755) 218 4775
- Chengdu Office
  Block B-1, 23/F., Chuan Xin Mansion, 18 Section 2, Renmin Road South, Chengdu, 610016, China
  Sales & Technical Support
  Phone :+86 (28) 619 9730
  Fax :+86 (28) 619 9801

REMECO (Ryoden Merchandising Co., Ltd.)
http://www.mitsubishi-ryoden.com.hk
Units 5-10, 20th Floor, Tower I, Ever Gain Plaza, 88 Container Port Road, Kwai Chung, N.T., Hong Kong, China

Sales Support	Phone	:+852 2510 2119
	Fax	:+852 2510 463
Technical Support	Phone	:+852 2510 2188

Sales & Technical Support
E-mail :info.pav@remeco.meap.com

MEAP (Mitsubishi Electric Asia Pte Ltd)
http://www.mitsubishielectric.com.sg
307 Alexandra Road, Mitsubishi Electric Building, 289245,Singapore

Main Line	Phone	:+65 6 473 2308
	Fax	:+65 6 475 9503

Sales & Technical Support
E-mail :peripherals@asia.meap.com

AMS (Antah Melco Sales & Services Sdn Bhd
(A Joint-Venture Company of Mitsubishi Electric Corporation))
http://www.antahmelco.com.my
6, Jalan 13/6, Petaling Jaya, Selangor Darul Ehsan, Malaysia

Main Line	Phone	:+603-7955 2088
	Fax	:+603-7956 3950
		:+603-7958 2576

Technical Support
Phone :+603-7955 2088
E-mail :anmelco@po.jaring.my
Product Information
Phone :+603-7955 2088

ME-TWN (Mitsubishi Electric Taiwan Co., Ltd.)
http://www.mitsubishi-electric.com.tw
9th Floor., 90 Sec. 6, Chung Shan N. Rd., Taipei, Taiwan

Sales Support	Phone	:+886 (0) 2 2832 8255
	Fax	: +886 (0) 2 2833 9813

KYW (Kang Yong Watana Co., Ltd.)
http://www.mitsubishi-kyw.in.th
28 Krungthep Kreetha Road, Huamark Bangkapi, Bangkok, 10240, Thailand

Sales Support	Phone	:+66 (2) 731 6901
	Fax	:+66 (2) 379 4763

STC (Setsuyo Trading Co.Ltd. Seoul Branch
Dongseo Game Channel Bldg, 660-11, Deungchon-dong, Kangseo-ku, Seoul, Korea

Main Line	Phone	:+82 (0) 2 3665 4964
	Fax	:+82 (0) 2 3665 4965

Oceania

ME-AUST (Mitsubishi Electric Australia)
http://www.mitsubishi-electric.com.au/prod.asp?prod=proj
348 Victoria Road, Rydalmere, N.S.W. 2116, Australia

Sales	Phone	:+(612)9684-7777
	Fax	:+(612)9898-0484
	E-mail	:ped@meaust.meap.com

MENZ (BDT Ltd)
(Warranty Registration) http://www.bdt.co.nz/projectors/warranty.asp
1 Parliament St, Lower Hutt, Wellington, New Zealand

Sales	Phone	:+64-(0)4-560-9100
	Fax	:+64-(0)4-560-9133
	E-mail	:help@bdt.co.nz
Technical	Phone	:+64-(0)4-560-9100
	Fax	:+64-(0)4-560-9133

Manufactured by Mitsubishi Electric Corporation
1 Zusho Baba, Nagaokakyo-City, Kyoto Japan

MITSUBISHI ELECTRIC CORPORATION