myprojectorlamps.com

The most trusted, dependable name in projector lamp sales.

http://www.myprojectorlamps.com

http://www.myprojectorlamps.ca

http://www.myprojectorlamps.eu

The following projector manual has not been modified or altered in any way.

MITSUBISHI ELECTRIC

ENGLISH

DATA PROJECTOR

MODEL

XD221U-ST

User Manual

XD221U-ST

This User Manual is important to you.
Please read it before using your projector.

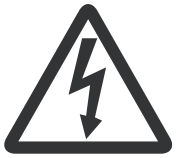

CAUTION

RISK OF ELECTRIC SHOCK
DO NOT OPEN

CAUTION : TO REDUCE THE RISK OF ELECTRIC SHOCK,

DO NOT REMOVE COVER (OR BACK)
NO USER-SERVICEABLE PARTS INSIDE
REFER SERVICING TO QUALIFIED
SERVICE PERSONNEL.

The lightning flash with arrowhead symbol within an equilateral triangle is intended to alert the user to the presence of uninsulated "dangerous voltage" within the product's enclosure that may be of sufficient magnitude to constitute a risk of electric shock.

The exclamation point within an equilateral triangle is intended to alert the user to the presence of important operating and maintenance (servicing) instructions in the literature accompanying the appliance.

WARNING:
TO PREVENT FIRE OR SHOCK HAZARD, DO NOT EXPOSE THIS APPLIANCE TO RAIN OR MOISTURE.

CAUTION:
TO PREVENT ELECTRIC SHOCK, DO NOT USE THIS (POLARIZED) PLUG WITH AN EXTENSION CORD, RECEPTACLE OR OTHER OUTLET UNLESS THE BLADES CAN BE FULLY INSERTED TO PREVENT BLADE EXPOSURE.

NOTE:
SINCE THIS PROJECTOR IS PLUGGABLE EQUIPMENT, THE SOCKET-OUTLET SHALL BE INSTALLED NEAR THE EQUIPMENT AND SHALL BE EASILY ACCESSIBLE.

WARNING
Use the attached specified power supply cord. If you use another power supply cord, it may cause interference with radio and television reception.

Use the attached RGB cable and the shielded LAN cable with this equipment so as to keep interference within the limits of an FCC Class B device.

This apparatus must be grounded.

DO NOT LOOK DIRECTLY INTO THE LENS WHEN THE PROJECTOR IS IN THE POWER ON MODE.

CAUTION
Not for use in a computer room as defined in the Standard for the Protection of Electronic Computer/Data Processing Equipment, ANSI/NFPA 75.

The attached power cord is to be used exclusively for this product. Never use it for other products.

When using the projector in Europe:

COMPLIANCE NOTICE

This Projector complies with the requirements of the EC Directive 2004/108/EC "EMC Directive" and 2006/95/EC "Low Voltage Directive".

The electro-magnetic susceptibility has been chosen at a level that gains proper operation in residential areas, on business and light industrial premises and on small-scale enterprises, inside as well as outside of the buildings. All places of operation are characterized by their connection to the public low voltage power supply system.

WARNING
Use the attached RGB cable and the shielded LAN cable with this equipment so as to keep interference within the limits of an EN55022 Class B device.

Please follow WARNING instructions.

Note: This symbol mark is for EU countries only.
This symbol mark is according to the directive 2002/96/EC Article 10 Information for users and Annex IV, and/or to the directive 2006/66/EC Article 20 Information for end-users and Annex II.

Your MITSUBISHI ELECTRIC product is designed and manufactured with high quality materials and components which can be recycled and/or reused.
This symbol means that electrical and electronic equipment, batteries and accumulators, at their end-of-life, should be disposed of separately from your household waste.
If a chemical symbol is printed beneath the symbol shown above, this chemical symbol means that the battery or accumulator contains a heavy metal at a certain concentration. This will be indicated as follows:
Hg: mercury (0,0005%), Cd: cadmium (0,002%), Pb: lead (0,004%)
In the European Union there are separate collection systems for used electrical and electronic products, batteries and accumulators.
Please, dispose of this equipment, batteries and accumulators correctly at your local community waste collection/recycling centre.
Please, help us to conserve the environment we live in!

Contents

Important safeguards....4
Overview....6
Remote control....8
Installation....9
Basic connections....10
Preparation....12
Basic operation....13
Menu operation....16
Image adjustment....23
Advanced features....25
Lamp replacement....27
Troubleshooting....29
Indicators....32
Specifications....33

ENGLISH

Declaration of Conformity

Model Number :	XD221U-ST
Trade Name :	MITSUBISHI ELECTRIC
Responsible party :	Mitsubishi Digital Electronics America, Inc. 9351 Jeronimo Road, Irvine, CA 92618 U.S.A
Telephone number :	+1-(949) 465-6000

This device complies with Part 15 of the FCC Rules. Operation is subject to the following two conditions:
(1) this device may not cause harmful interference, and
(2) this device must accept any interference received, including interference that may cause undesired operation.

Trademark, Registered trademark

Macintosh is registered trademark of Apple Computer Inc.
DLP™, Digital Micromirror Device, DMD, and BrilliantColor™ are all trademarks of Texas Instruments.
Microsoft, Windows, Windows 2000, Windows XP, Windows Vista, and Internet Explorer are registered trademarks, trademarks, or trade names of Microsoft Corporation in the U.S. and/or other countries.
Other brand or product names are trademarks or registered trademarks of their respective holders.

Important safeguards

Please read all these instructions regarding your projector and retain them for future reference. Follow all warnings and instructions marked on the projector.

1. Read instructions
   All the safety and operating instructions should be read before the appliance is operated.
2. Retain instructions
   The safety and operating instructions should be retained for future reference.
3. Warnings
   All warnings on the appliance and in the operating instructions should be adhered to.
4. Instructions
   All operating instructions must be followed.
5. Cleaning
   Unplug this projector from the wall outlet before cleaning it. Do not use liquid aerosol cleaners. Use a damp soft cloth for cleaning.
6. Attachments and equipment
   Never add any attachments and/or equipment without the approval of the manufacturer as such additions may result in the risk of fire, electric shock or other personal injury.
7. Water and moisture
   Do not use this projector near water or in contact with water.
8. Accessories
   Do not place this projector on an unstable cart, stand, tripod, bracket or table. Use only with a cart, stand, tripod bracket, or table recommended by the manufacturer or sold with the projector. Any mounting of the appliance should follow the manufacturer's instructions and should use a mounting accessory recommended by the manufacturer.

   An appliance and cart combination should be moved with care. Quick stops, excessive force and uneven surfaces may cause the appliance and cart combination to overturn.
9. Ventilation
   Slots and openings in the cabinet are provided for ventilation, ensuring reliable operation of the projector and to protect it from overheating. Do not block these openings or allow them to be blocked by placing the projector on a bed, sofa, rug, or bookcase. Ensure that there is adequate ventilation and that the manufacturer's instructions have been adhered to.
10. Power sources
    This projector should be operated only from the type of power source indicated on the marking label. If you are not sure of the type of power, please consult your appliance dealer or local power company.
11. Power-cord protection
    Power-supply cords should be routed so that they are not likely to be walked on or pinched by items placed upon or against them. Pay particular attention to cords at plugs, convenience receptacles, and points where they exit from the appliance. Do not put the power cord under a carpet.
12. Overloading
    Do not overload wall outlets and extension cords as this can result in a fire or electric shock.
13. Objects and liquids
    Never push objects of any kind through openings of this projector as they may touch dangerous voltage points or short-out parts that could result in a fire or electric shock. Never spill liquid of any kind on the projector.
14. Servicing
    Do not attempt to service this projector yourself. Refer all servicing to qualified service personnel.
15. Damage requiring service
    Unplug this projector from the wall outlet and refer servicing to qualified service personnel under the following conditions:
    (a) If the power-supply cord or plug is damaged.
    (b) If liquid has been spilled, or objects have fallen into the projector.
    (c) If the projector does not operate normally after you follow the operating instructions. Adjust only those controls that are covered by the operating instructions. An improper adjustment of other controls may result in damage and may often require extensive work by a qualified technician to restore the projector to its normal operation.
    (d) If the projector has been exposed to rain or water.
    (e) If the projector has been dropped or the cabinet has been damaged.
    (f) If the projector exhibits a distinct change in performance - this indicates a need for service.
16. Replacement parts
    When replacement parts are required, be sure that the service technician has used replacement parts specified by the manufacturer or parts having the same characteristics as the original part. Unauthorized substitutions may result in fire, electric shock or other hazards.
17. Safety check
    Upon completion of any service or repair to this projector, ask the service technician to perform safety checks determining that the projector is in a safe operating condition.
18. Precaution on using Soft Case or carrying the projector
    The tip of the projection lens of the projector protrudes. Therefore, be sure to put Lens Cap on the lens for protection when carrying the projector or when placing it in Soft Case.

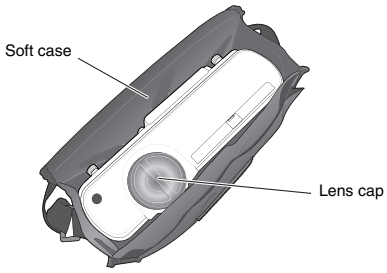

WARNING:

Unplug immediately if there is something wrong with your projector.

Do not operate if smoke, strange noise or odor comes out of your projector. It may cause fire or electric shock. In this case, unplug immediately and contact your dealer.

Never remove the cabinet.

This projector contains high voltage circuitry. An inadvertent contact may result in an electric shock. Except as specifically explained in User Manual, do not attempt to service this product by yourself. Please contact your dealer when you want to fix, adjust, or inspect the projector.

Do not modify the projector.

It can lead to fire or electric shock.

Do not keep using the damaged projector.

If the projector is dropped and the cabinet is damaged, unplug the projector and contact your dealer for inspection. It may lead to fire if you keep using the damaged projector.

Do not face the projection lens to the sun.

It can lead to fire.

Use correct voltage.

If you use incorrect voltage, it can lead to fire.

Do not place the projector on uneven surface.

Place the projector on a level and stable surface only.

Do not look into the lens when the projector is operating.

It may hurt your eyes. Never let children look into the lens when the projector is on.

Do not unplug the power cord during operation.

It can lead to lamp breakage, fire, electric shock or other trouble. Wait for the fan to stop before unplugging the power cord.

Do not touch the air outlet grilles and bottom plate.

Do not touch them or put other equipment close to the air outlet grilles because they become hot during operation. The heated air outlet grilles and bottom plate may cause injury or damage to other equipment. Also, do not put the projector on a desk that is easily affected by heat.

Do not look into the air outlet grilles when projector is operating.

Heat, dust, etc. may blow out of them and hurt your eyes.

Do not block the air inlet and outlet grilles.

If they are blocked, heat may be generated inside the projector, causing deterioration in the projector quality and fire.

Do not use flammable solvents (benzene, thinner, etc.) and flammable aerosols near the projector.

Flammable substances may ignite causing fire or breakdown because the temperature inside the projector rises very high while the lamp is illuminating.

Do not use the projector with condensation on it.

It can lead to breakdown or other failure.

Place of installation

For safety's sake, do not use the projector at any place subjected to high temperature and high humidity. Please maintain an operating temperature, humidity, and altitude as specified below.

- Operating temperature: between +41°F (+5°C) and +95°F (+35°C)
- Operating humidity: between 30% and 90%
- Never put any heat-producing device under the projector to prevent the projector from being overheated.
- Do not install the projector at a place that is unstable or subject to vibration.
- Do not install the projector near any equipment that produces a strong magnetic field. Also refrain from installing the projector near any cable carrying a large amount of current.
- Place the projector on a solid, vibration-free surface. Otherwise it may fall, causing serious injury or damage.
- Do not stand the projector on its end. It may fall, causing serious injury or damage.
- Slanting the projector more than ±10° (right and left) or ±15° (front and rear) may cause trouble or explosion of the lamp.
- Do not place the projector near air-conditioning unit, heater, or humidifier to avoid hot or moist air to the exhaust and ventilation hole of the projector.
- Be sure to use this projector at an altitude of less than 1500 meters.

Lamp replacement

Be sure to use the lamp attachment unit designed specifically for this projector when replacing the lamp with a new one. Lamp fragments may fall from the inside if the lamp were broken.

COMPLIANCE NOTICE OF FCC

This equipment has been tested and found to comply with the limits for a Class B digital device, pursuant to Part 15 of the FCC Rules. These limits are designed to provide reasonable protection against harmful interference in a residential installation. This equipment generates, uses and can radiate radio frequency energy and, if not installed and used in accordance with the instructions, may cause harmful interference to radio communications. However, there is no guarantee that interference will not occur in a particular installation. If this equipment does cause harmful interference to radio or television reception, which can be determined by turning the equipment off and on, the user is encouraged to try to correct the interference by one or more of the following measures:

- Reorient or relocate the receiving antenna.
- Increase the separation between the equipment and receiver.
- Connect the equipment into an outlet on a circuit different from that to which the receiver is connected.
- Consult the dealer or an experienced Radio / TV technician for help.

Changes or modifications not expressly approved by Mitsubishi could void the user's authority to operate this equipment.

COMPLIANCE NOTICE OF INDUSTRY CANADA

This Class B digital apparatus complies with Canadian ICES-003.

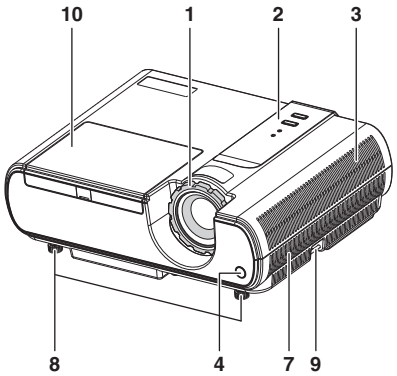

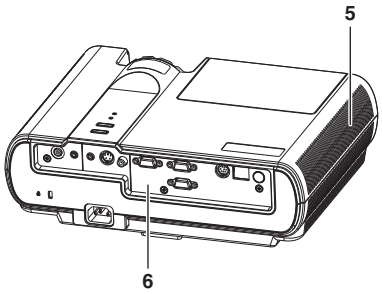

1 **FOCUS ring**
2 **Control panel**
3 **Air inlet grille**
4 **Remote control sensor (Front)**
5 **Air outlet grille**
6 **Terminal board**
7 **Speaker**
8 **Adjustment feet**
9 **Lock bar**
10 **Lamp cover**

Caution:

Do not replace the lamp immediately after using the projector because the lamp would be extremely hot and it may cause burns.

Control panel

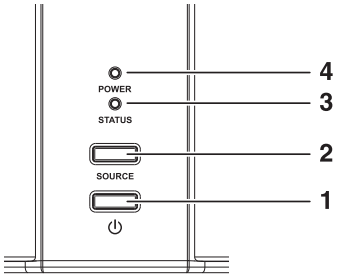

1 **Power button**
2 **SOURCE button**
Each press of this button enables the input source to switch in the following order: COMPUTER 1, COMPUTER 2, VIDEO, and S-VIDEO.
3 **STATUS indicator**
4 **POWER indicator**

Terminal board

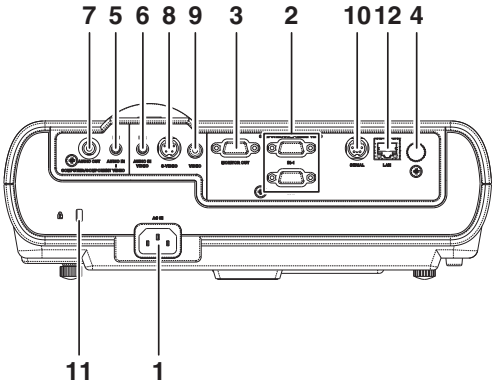

1 **Power jack**
2 **COMPUTER IN terminal (1, 2) (Mini D-SUB 15-pin)**
3 **MONITOR OUT terminal (Mini D-SUB 15-pin)**
4 **Remote control sensor (Rear)**
5 **AUDIO IN-1 terminal (Mini jack)**
6 **AUDIO IN-2 terminal (Mini jack)**
7 **AUDIO OUT terminal (Mini jack)**
8 **S-VIDEO terminal**
9 **VIDEO terminal**
10 **SERIAL (RS-232C) terminal (Mini DIN)**
11 **Kensington Lock**
12 **LAN terminal (RJ-45)**

Kensington Lock

This projector has a Kensington Security Standard connector for use with Kensington MicroSaver Security System.

Refer to the information that came with the Kensington System for instructions on how to use it to secure the projector. Please contact Kensington Technology Group below.

Kensington Technology Group
2855 Campus Drive
San Mateo, CA 94403, U.S.A.
Phone: +1- (650)572-2700 Fax: +1- (650)572-9675

Bottom side

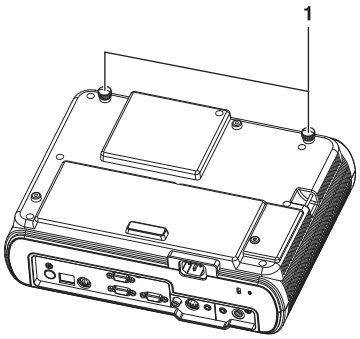

1 Adjustment feet

Remote control

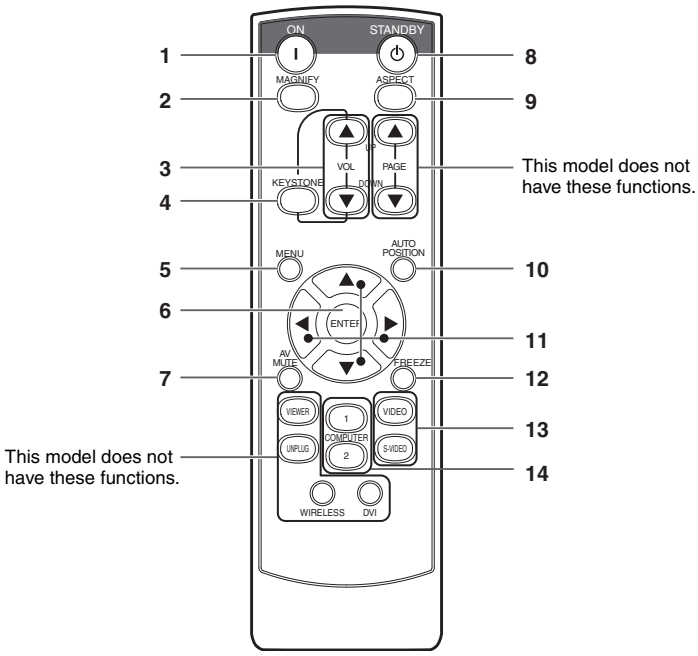

1 **ON button**
2 **MAGNIFY button**
3 **VOLUME UP, DOWN buttons**
4 **KEYSTONE button**
5 **MENU button**
Two types of MENU display are equipped. QUICK MENU appears on the screen when pressing MENU button. In addition, DETAIL MENU appears when selecting DETAIL MENU in this MENU and pressing ENTER button.
6 **ENTER button**
7 **AV (Audio/Video) MUTE button**
8 **OFF button**
9 **ASPECT button**
10 **AUTO POSITION button**
11 **Direction buttons**
12 **FREEZE button**
13 **VIDEO, S-VIDEO buttons**
14 **COMPUTER (1, 2) buttons**

- The UP and DOWN buttons are used in the KEYSTONE adjustment in addition to the volume control.

Remote control

Battery installation

Use two (AA, R6) size batteries.

1. Remove the back cover of the remote control by pushing the battery compartment door in the direction of the arrow.
2. Load the batteries making sure that they are positioned correctly (+ to +, and - to -).
   - Load the batteries from - spring side, and make sure to set them tightly.
3. Replace the back cover.

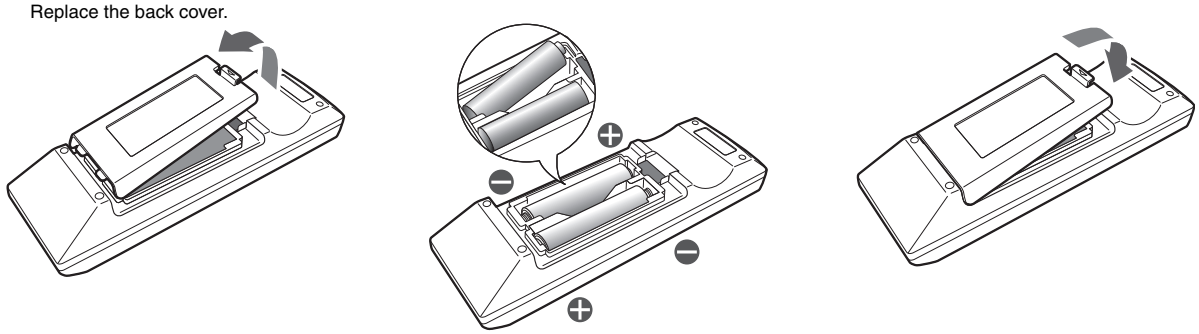

Caution:

- Use of a battery of wrong type may cause explosion.
- Only Carbon-Zinc or Alkaline-Manganese Dioxide type batteries should be used.
- Dispose of used batteries according to your local regulations.
- Batteries may explode if misused. Do not recharge, disassemble, or dispose of in fire.
- Be sure to handle the battery according to the instructions.
- Load the battery with its positive (+) and negative (-) sides correctly oriented as indicated on the remote control.
- Keep batteries out of reach of children and pets.
- Remove the battery, if the remote control is not used for a long time.
- Do not combine a new battery with an old one.
- If the solution of batteries comes in contact with your skin or clothes, rinse with water. If the solution comes in contact with your eyes, rinse them with water and then consult your doctor.

Operation range (of the remote control)

The maximum operation distance of the remote control is about 10 m (or about 32 feet) when the remote control is pointed at the remote control sensor of the projector. When the remote control is pointed to the screen, the distance from the remote control to the projector via the screen should be 5 m or less. However, the operation distance varies depending on the type of the screen used.

Reception angle (vertical)

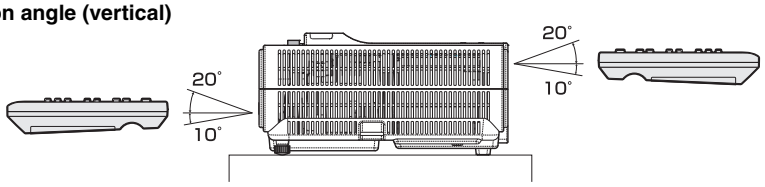

Reception angle (horizontal)

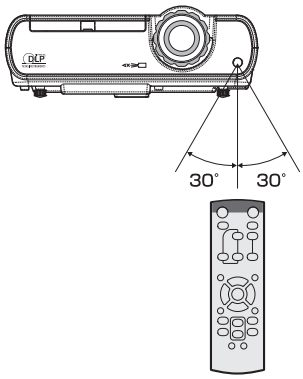

Reception angle (vertical), ceiling mount

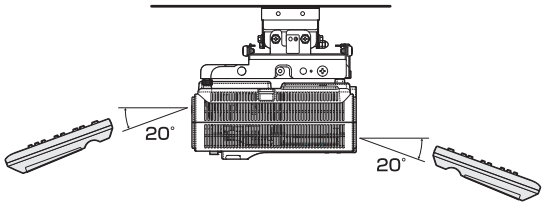

Important:

- Do not expose the remote control sensor to direct sunlight or fluorescent. Keep a distance at least 2 m (6.5 feet) between the remote control sensor and the fluorescent light to ensure correct operation of the remote control.
  Inverted fluorescent light, if located near the projector, may interfere the remote control.
- When you use the remote control too close to the remote control sensor, the remote control may not work correctly.

Installation

Layout of the projector

Image size varies depending on the distance between the screen and the projector.

Front projection

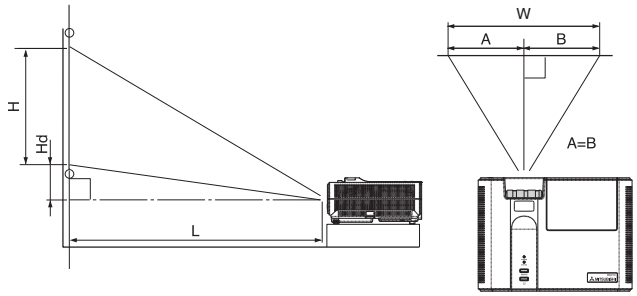

L : Between the screen and the front edge of the projector
Hd : Height of the projected image

Screen						Distance from the screen : L		Hd	
Diagonal size		Width : W		Height : H					
inch	cm	inch	cm	inch	cm	inch	m	inch	cm
40	102	32	81	24	61	22	0.5	3.6	9
60	152	48	122	36	91	33	0.8	5.4	14
80	203	64	163	48	122	44	1.1	7.2	18
100	254	80	203	60	152	55	1.4	9.0	23
150	381	120	305	90	229	83	2.1	13.4	34
200	508	160	406	120	305	111	2.8	17.9	45
250	635	200	508	150	381	139	3.5	22.4	57
300	762	240	610	180	457	167	4.3	26.9	68

- The above figures are approximate and may be slightly different from the actual measurements.

Front projection, ceiling mounting

For ceiling mounting, you need the ceiling mount kit designed for this projector. Ask a specialist for installation.

For details, consult your dealer.

- The warranty on this projector does not cover any damage caused by use of any non-recommended ceiling mount kit or installation of the ceiling mount kit in an improper location.

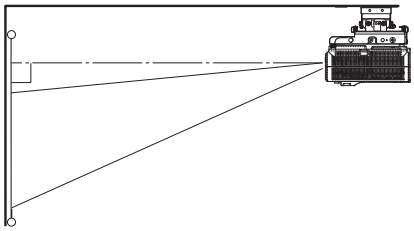

- When using the projector mounted on the ceiling, set IMAGE REVERSE in the INSTALLATION menu to MIRROR INVERT. See page 20.
- When the projector is mounted on the ceiling, images may appear darker than those projected in the case of tabletop mounting. This isn't a product malfunction.

Ceiling Mount Installation

If you wish to install the projector using a ceiling mount, please use the screw holes as the illustration shows.

Important:

- Screws are not included. Please obtain the appropriate screws for your type of ceiling. (M4 diameter)
- It is recommended that you keep a reasonable space between the bracket and the projector to allow for proper heat distribution.

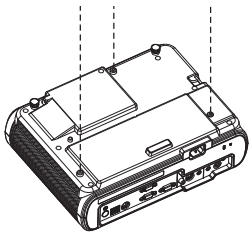

Rear projection

Ask a specialist for installation. For details, consult your dealer.

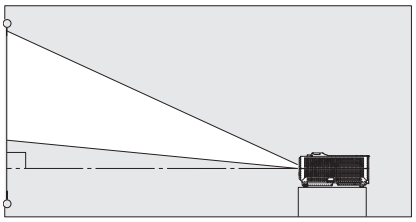

- For rear projection, set IMAGE REVERSE in the INSTALLATION menu to MIRROR. See page 20.

Caution:

- Placing the projector directly on a carpet impairs ventilation by the fans, causing damage or failure. Put a hard board under the projector to facilitate ventilation.
- Place the projector at least 50 cm (or 20 inch) away from the wall to prevent the air inlet grille and the air outlet grilles that emit hot air from being blocked.
- Do not use the projector in the following locations and manners, which may cause fire or electric shock.
  - In a dusty or humid place.
  - In a sideways or upside-down position.
  - Near a heater.
  - In an oily, smoky, or damp place such as a kitchen.
  - In direct sunlight.
  - Where the temperature rises high, such as in a closed car.
  - Where the temperature is lower than +41°F (or +5°C) or higher than +95°F (or +35°C).

Important:

- Do not apply force to the lens, because the lens may be damaged.
- Be sure to use this projector at an altitude of less than 1500 meters.

Basic connections

This projector can be connected with various devices such as a VCR, video camera, videodisc player, and personal computer that have analog RGB output connectors.

Important:

- Make sure that the connected device is turned off before starting connection.
- Plug in the power cords of the projector and the connected devices firmly. When unplugging, hold and pull the plug. Do not pull the cord.
- When the projector and the connected devices are located too close to each other, the projected image may be affected by their interference.
- See the owner's guide of each device for details about its connections.

Projector + AV device

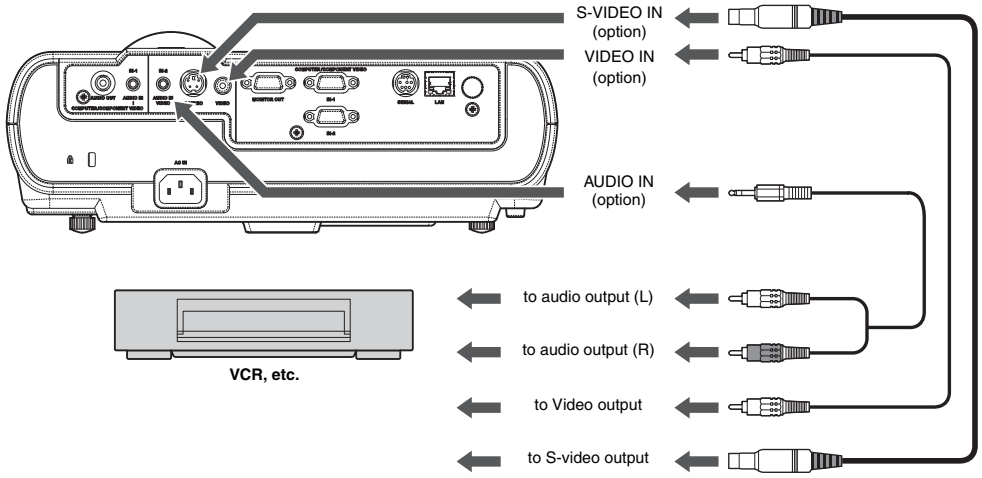

Important:

- Match the colors of the video and audio plugs on the Audio cable with those of the terminals.
- Speaker output is mono.

Projector + DVD player or HDTV decoder

Some DVD players have an output connector for 3-line fitting (Y, CB, CR). When connecting such DVD player with this projector, use the COMPUTER IN terminal.

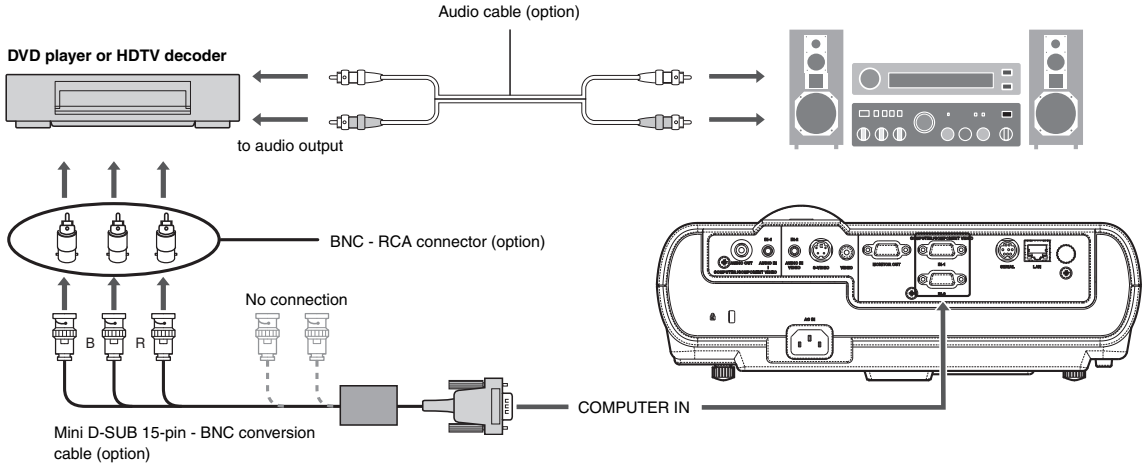

Important:

- The terminal's names Y, PB, and PR are given as examples of when a HDTV decoder is connected.
- The terminal's names vary depending on the connected devices.
- Use a Mini D-SUB 15-pin - BNC conversion cable for connection.
- Image may not be projected correctly with some DVD players.
- When connecting a HDTV decoder having RGB output terminals, set COMPUTER INPUT to RGB in the SIGNAL menu.

Projector + Computer

For computer with Mini D-SUB

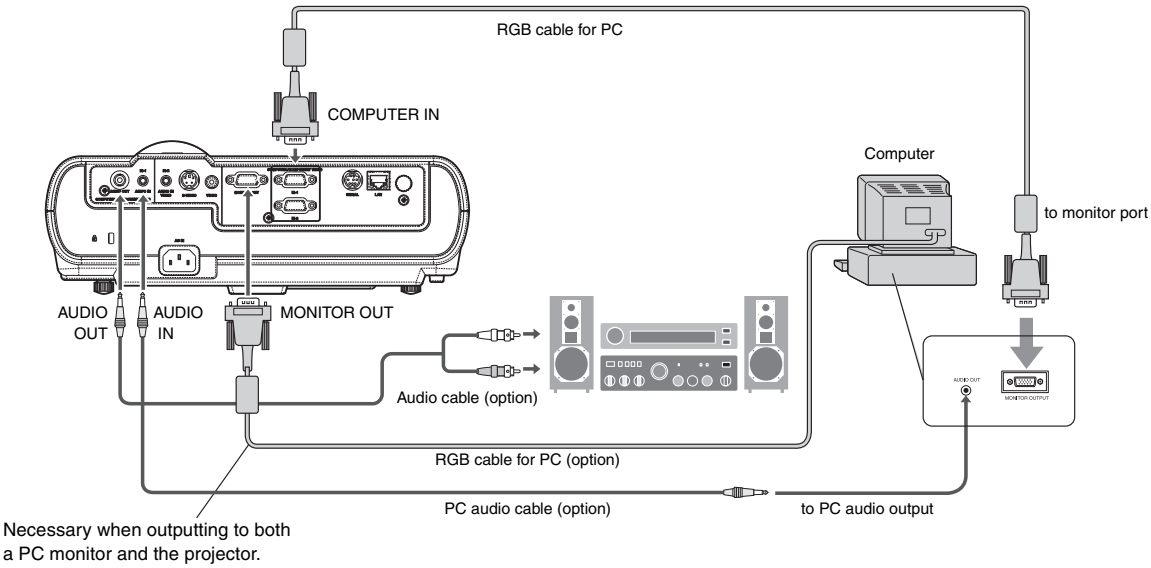

For analog connection:

1. Connect one end of the supplied RGB cable to the COMPUTER IN terminal (1, 2) of the projector.
2. Connect the other end of the RGB cable to the monitor port of the computer.

For monitor connection:

Connect the RGB cable from the monitor to the MONITOR OUT terminal of the projector.

- Images may not be displayed correctly depending on the type of the input signal. See the instruction manual of the monitor.
- Signals are coming from the COMPUTER IN terminal (1 or 2) of the projector.
- When STANDBY MODE is set to "LOW", MONITOR OUT is not output during the STANDBY state.
- When STANDBY MODE is set to "STANDARD", the signals from COMPUTER IN-1 are output during the STANDBY state.
- When signals are coming from both COMPUTER IN terminals (1, 2), images are projected from the terminal (1 or 2) currently or last selected in the projector's menu.

Important:

- When you use a longer RGB cable instead of the provided cable, the image may not be projected correctly.
- Some computers require additional connectors or analog RGB output adapters to be connected with this projector. Contact your dealer for further information.
- This projector uses stereo mini jack for its audio input. Check the type of the audio output terminal of the connected computer and prepare a proper cable for connection. Some computers don’t have the audio output terminal.
- Speaker output is mono.
- When the audio cable is connected to the AUDIO OUT terminal, the speaker output is muted.

For Macintosh

- If your Macintosh has no video port, a monitor output adapter is required. Contact your dealer for further information.
- Some Macintoshes require a MAC adapter for the RGB cable for connection with this projector. Contact your dealer for further information.

About DDC

The COMPUTER/COMPONENT VIDEO IN-1 terminal of this projector complies with the DDC 1/2B standard. When a computer supporting this standard is connected to this terminal, the computer will automatically load the information from this projector and prepare for output of appropriate images.

- After connecting a computer supporting this standard to this terminal, plug the power cord of the projector in the wall outlet first, and then boot up the computer.

Preparation for projection

1. To protect the projector during transportation, protective tapes are adhered to the terminal board of the projector.
   Please remove the protective tapes before use.

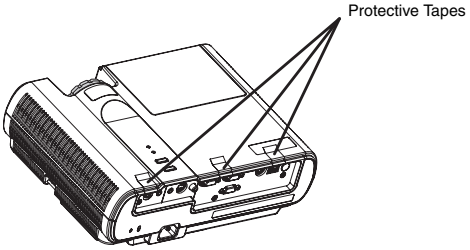

2. Attach the provided power cord to the projector.
3. Plug the power cord in the wall outlet.
4. Remove the lens cap.

Warning:

- Do not look into the lens directly when the projector is on.
- The lens cap is for protecting the lens. If you leave the lens cap on the lens with the projector turned on, it may be deformed because of heat build-up. Remove the lens cap when you turn on the projector.
- One of power cords for the U.S., Europe and U.K. is provided appropriately.
- This projector uses the power plug of three-pin grounding type. Do not remove the grounding pin from the power plug. If the power plug doesn't fit your wall outlet, ask an electrician to change the wall outlet.
- In case that the power cord for the U.S is provided with this projector, never connect this cord to any outlet or power supply using other voltages or frequencies than rated. If you want to use a power supply using other voltage than rated, prepare an appropriate power cord separately.
- Use 100-240 V AC 50/60 Hz to prevent fire or electric shock.
- Do not place any objects on the power cord or do not place the projector near heat sources to prevent damage to the power cord. If the power cord should be damaged, contact your dealer for replacement because it may cause fire or electric shock.
- Do not modify or alter the power cord. If the power cord is modified or altered, it may cause fire or electric shock.

Caution:

- Plug in the power cord firmly. When unplugging, hold and pull the power plug, not the power cord.
- Do not plug in or out the power cord with your hand wet. It may cause electric shock.

Adjustment of the projection angle

For the best projection, project images on a flat screen installed at 90 degrees to the floor. If necessary, tilt the projector using the two adjustment feet on the bottom of the projector.

Using the adjustment feet (front)

1. Tilt up the projector to the appropriate angle.
2. Rotate the adjustment feet (front) for fine adjustment.

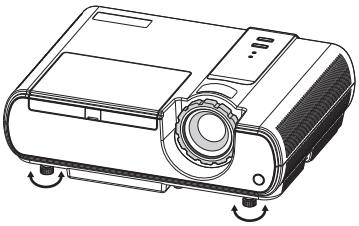

Important:

- Install the screen on a flat wall at 90 degrees to the floor.
- Slanting the projector more than ±10° (right and left) or ±15° (front and rear) may cause trouble or explosion of the lamp. You can tilt the projector up to 8 degrees using the adjustment feet only.
- Images may not be projected in a shape of a regular rectangle or with its aspect ratio 4:3, depending on the installation conditions of the projector and the screen.
- To correct vertical keystone distortion, press the KEYSTONE button on the remote control to display KEYSTONE, and adjust the image by pressing the VOLUME ▲, ▼ button.

In the following cases:

Press the ▼ button. Press the ▲ button.

Important:

- When the keystone adjustment is carried out, the adjustment value is indicated. Note that this value doesn't mean a projection angle.
- The allowable range of the adjustment value in the keystone adjustment varies depending on the installation conditions.
- When the keystone adjustment takes effect, the resolution decreases. In addition, stripes may appear or straight lines may bend in images with complicated patterns. They are not due to product malfunctions.
- Noise may appear on the screen during the keystone adjustment because of the type of the video signal being projected and the setting values of the keystone adjustment. In such cases, set the keystone adjustment values in the range where the image is displayed without noise.
- When the keystone adjustment is carried out, the image may not be displayed correctly because of the type of input signal.

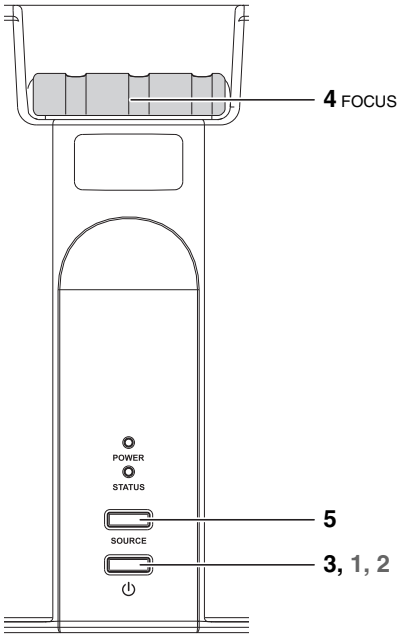

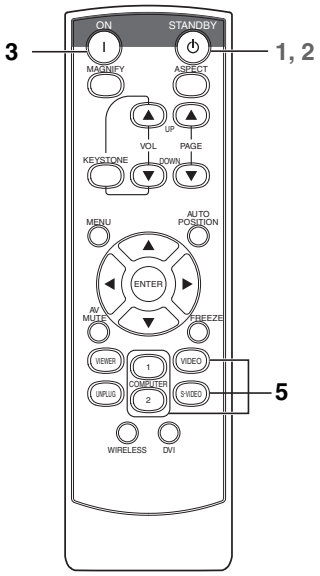

Power-on

1. Turn on the device connected to the projector first.
2. Plug the power cord in the wall outlet.
   - The POWER indicator lights up.
   - If the power cord is unplugged from the wall outlet before the projector is cooled down completely after use, the fans may start rotating when the power cord is plugged in next time and the POWER button may not function. In this case, wait for the fans to stop and press the POWER button to light the indicator.
3. Press the POWER button on the control panel or the ON button on the remote control.
   - It may take about one minute for the lamp to light up.
   - The lamp occasionally fails to light up. Wait a few minutes and try to light the lamp again.
   - After the POWER button is pressed, the image may flicker before the lamp becomes stable. This is not a product malfunction.
   - Regardless of the setting of LAMP MODE in the INSTALLATION menu, the STANDARD lamp mode is activated by default whenever the projector is turned on. The LAMP MODE is set to either STANDARD or LOW depending on the setting last selected, and you cannot switch the LAMP MODE in about one minute after the lamp is on.

Condition \ Indicator	STATUS	POWER
Stand-by	-	Red
When the lamp is on.	Green	Green

Important:

- If the lamp exceptionally turned off due to the power interruption or voltage drop, it can happen that the lamp does not turn on even if you switch again the power supply on. In that case, please pull the electric cord out of the consent and put it again in the consent about 10 minutes later.
- Do not cover the lens with the lens cap while the lamp is on.
- The projector starts warming up when the POWER button is pressed. During the warm-up process, images may appear dark and no commands are accepted.
- By blinking red, the STATUS indicator indicates that the lamp should be replaced soon. Replace the lamp when the STATUS indicator blinks red. (See page 29 and 32.)
- Images may not be projected with good quality in an extremely hot or cold environment. (This is not a product malfunction.)
- In order to ensure the safety in case of trouble with the projector, use an electrical outlet having an earth leakage breaker to supply the power to the projector. If you do not have such outlet, ask your dealer to install it.

4. Adjust the focus by turning the focus ring.
5. Choose your desired external input source using the SOURCE or COMPUTER or VIDEO button.
   - Each press of SOURCE button of the Control Panel enables the input source to switch in the following order: COMPUTER 1, COMPUTER 2, VIDEO, and S-VIDEO.
   - When pressing COMPUTER (1 or 2), VIDEO, or S-VIDEO button on the remote control, the input source switches directly as the button pressed.
   - The projector automatically selects the appropriate signal format. The selected signal format is displayed on the screen.
   - The SOURCE, COMPUTER and VIDEO buttons don't function while the menu is being displayed.
   - When COMPUTER is chosen as the source, images supplied from the computer may flicker. Press the ◀ or ▶ button on the remote control to reduce flicker, if it occurs.
   - To avoid permanently imprinting a fixed image onto your projector, please do not display the same stationary images for long period.

When fine streaks are seen on projected images

This is due to interference with the screen surface and is not a malfunction. Replace the screen or displace the focus a little.

Power-off

Use the following procedure to turn off the projector.

The lamp may deteriorate if the projector is powered off and on repeatedly within 30 minutes after the lamp is lighted.

1. Press the POWER button on the control panel or the STANDBY button on the remote control.
   - The message "POWER OFF? YES : PRESS AGAIN" appears on the screen.
   - To cancel, press any button except the POWER button. (Some buttons on the remote control don't function for cancel.)
2. Press the POWER button on the control panel or the STANDBY button on the remote control within 10 seconds again.
   - The lamp will go out and the STATUS indicator will start blinking.
   - Though the lamp goes out at this second press of the POWER button (or STANDBY button), the air outlet fans continue operating for one minute to cool down the lamp. The STATUS indicator will stop blinking.
   - After stopping the air outlet fans, if the temperature inside the set is still high, the temperature sensor detects it and then the air outlet fans may start again.
3. Unplug the power cord.
   - The POWER indicator will go out.
   - If the power cord should be unplugged accidentally while either the air inlet fan or the air outlet fans are operating or the lamp is on, allow the projector to cool down for 10 minutes with the power off. To light the lamp again, press the POWER button (or ON button). If the lamp doesn't light up immediately, repeat pressing the POWER button (or ON button) two or three times. If it should still fail to light up, replace the lamp.

Notice:

- When storing the projector in the carrying case, the lens should face up.

Instant Shut Down

You don't have to wait for the cooling fan to cease operation after powering off the projector. You can unplug the power cord right after the projector is powered off.

- Don't shut down the projector while the STATUS indicator is blinking after the lamp lights up because the lamp's life may be shortened.
- Don't turn the projector back on right after shutting it down because the lamp's life may be shortened. (Wait about 10 minutes before turning the projector back on.)
- Before shutting down the projector, be sure to close the menu screen. If you shut down the projector without closing the menu, the setting data of the menu may not be saved.

AUTO POSITION button

When the image isn't projected in the right position with COMPUTER selected as the input source, follow the procedure below.

1. Project a bright image such as the "Recycle Bin" window on the full screen.
2. If the screen saver is running, turn it off.
3. Press the AUTO POSITION button.
   - If the image is still not in the right position, adjust the image position using the SIGNAL menu. See page 22.

Volume from the speaker

Press the VOLUME ▲ or ▼ button to change the volume from the speaker.

The volume control bar will appear on the screen.

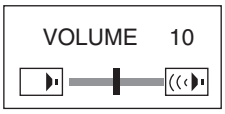

- The volume control bar will disappear about 10 seconds after the VOLUME button is released.
- The VOLUME buttons don't function while the menu selection bar or the menu is being displayed.
- When a high-level audio signal, such as a DVD audio signal, is supplied to the AUDIO IN terminal, the output from the speaker may be distorted.

AV mute

The video and audio signals are temporarily muted when the AV MUTE button is pressed. To cancel muting, press the AV MUTE button again.

Setting the aspect ratio

You can change the aspect ratio of the input video signal (or the ratio of width to height of the image). Change the setting according to the type of the input video signal.

How to change the settings:

With the remote control:

1. Press the ASPECT button.
   - Every time the ASPECT button is pressed, the aspect mode changes from NORMAL to 16:9, to FULL, and back to NORMAL.

With the FEATURE menu:

(See page 21 for menu setting.)

1. Display the FEATURE menu.
2. Select ASPECT by pressing the ▲ or ▼ button.
3. Select your desired aspect ratio by pressing the ◀ or ▶ button.

When 16:9 ↵ is selected.

4. Press the ENTER button.
5. Select your desired position (CENTER, UPPER or LOWER) by pressing the ◀ or ▶ button.

To cancel the menu:

6. Press the MENU button.

Important:

- When a 16:9 image is kept displayed for a long time before displaying 4:3 image, the afterimages of the black bars may appear on the 4:3 image screen. Consult your dealer in this case.

Caution:

- After using the projector, wait one minute for the air outlet fans to stop in normal use. Then unplug the power cord from the wall outlet.
- The lamp can't be lit again for one minute after turned off for safety purpose. It will take another one minute for the STATUS indicator to go out. If you want to turn on the projector again, wait until the indicator goes out, and then press the POWER button.
- The air outlet fans rotate faster as the temperature around the projector rises.
- When the temperature around the projector rises high, the sign "TEMPERATURE!!" blinks red on the screen. If the temperature stays high, the lamp will go out automatically.

Important:

- Do not display a still picture for a long time because the afterimages may persist on the screen.

Wall Screen

This function is to reproduce natural color tones when images are projected directly onto a screen or wall surface. You can select from BEIGE, LIGHT BLUE, LIGHT GREEN, PINK, BLACK BOARD, WHITE BOARD, and OFF, to match the color of the screen or wall to be used for projection.

1. Display the INSTALLATION menu. (See page 20 for more details.)

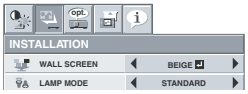

2. Press the ▲ or ▼ button to select WALL SCREEN.
3. Press the ◀ or ▶ button to select the color closest to that of the screen on which images are projected.
   - When the GAMMA mode setting is changed, images may not be displayed correctly.
   - When OFF or BLACK BOARD/WHITE BOARD is selected, the density cannot be adjusted.
   - When WHITE BOARD is selected, BrilliantColor™ in the Color Enhancer menu of the Image menu cannot be used. Additionally, Theater in the Color Enhancer menu of the Image menu has no effect and is automatically canceled when WHITE BOARD is selected.
4. Press the ENTER button.

5. Press the ◀ or ▶ button to adjust the density of the selected color.

When connecting to a laptop computer:

When this projector is connected to a laptop computer, there may be times when images may not be projected. When it occurs, set the computer so that it can output signals externally. The procedure varies across computers in use. See the instruction manual of your computer.

Menu operation

As one of the two types of MENU display, following QUICK MENU appears on the screen when pressing MENU button on the remote control. In addition, DETAIL MENU (See page 18) appears when selecting DETAIL MENU in this MENU and pressing ENTER button.

- Comparing QUICK MENU with DETAIL MENU, if the contents in those two menus are same each other, the functions in those two menus are same as well.
- To close QUICK MENU or DETAIL MENU, press MENU button when MENU is displayed.

QUICK MENU

* Menus are not displayed when no signal is supplied to the projector.

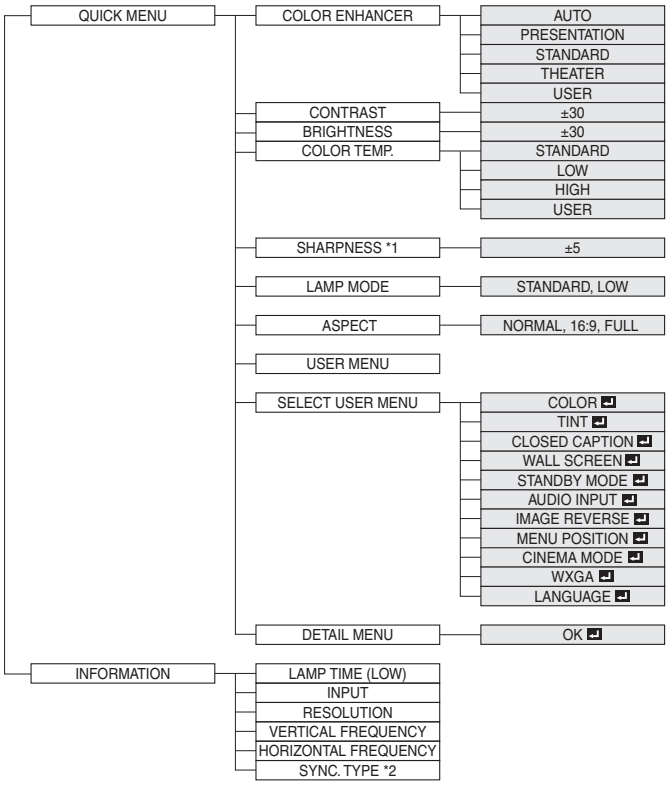

*1 Not available with certain signals

*2 Not available when the input signal is from the VIDEO IN or S-VIDEO IN terminal.

QUICK MENU Basic operation

Several settings can be adjusted using the menu.

Example : Contrast setting

1. Press the MENU button.

2. Press the ENTER button (or ▼ button).

3. Press the ▲ or ▼ button to select CONTRAST.

4. Press the ◀ or ▶ button to adjust the contrast.

5. Exit the menu by pressing the MENU button several times.

Important:

- When the button doesn't function, unplug the power cord from the wall outlet. Wait about 10 minutes, plug the power cord in, and try again.
- After selecting the items marked with ↵, press the ENTER button.

Menu Options

Set the following options provided in the respective menus.

1. QUICK MENU

Menu option	Setting	Feature description
COLOR ENHANCER	AUTO	Automatically sets an optimal color balance based on the input signal. Use this setting for most cases.
	PRESENTATION	Makes projected images bright and crisp.
	STANDARD	Makes projected images look natural.
	THEATER	Makes projected images soft and smooth. Best suited for movies.
	USER	Reflected by the value set in IMAGE menu. (See page 23.)
CONTRAST	±30	Adjusts the contrast of projected images. (See page 23.)
BRIGHTNESS	±30	Adjusts the brightness of projected images. (See page 23.)
COLOR TEMP.	4 options	Adjusts the color temperature. You cannot select this setting when WALL SCREEN in the INSTALLATION menu is set to a setting other than OFF. (See page 23.)
SHARPNESS	±5	Adjusts the sharpness of projected images. (See page 23.)
LAMP MODE	STANDARD	Select this setting when you want to view images in a well-lit room.
	LOW	Select this setting when you want to view images at a moderate light intensity. The operating sound is consequently reduced, and the lamp lifetime becomes longer. • When this mode is switched, projected images may flicker. • If this mode is frequently switched, the lamp may be deteriorated.
ASPECT	NORMAL	Automatically sets the aspect ratio in relative to the input signal. Use this setting for most cases.
	16:9	Selects a desired screen position for anamorphically squeezed or horizontally compressed images stored on DVD disks.
	FULL	Select this setting when you want to project images in the full screen.
USER MENU		Displays the menu item selected in SELECT USER MENU.
SELECT USER MENU		Select the item to display in USER MENU.
DETAIL MENU		Moves to DETAIL MENU.

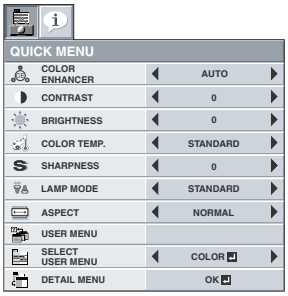

- You cannot adjust COLOR TEMP. when WALL SCREEN is set to other than OFF.
- When COLOR ENHANCER is switched, projected images may be distorted.
- By default, the LAMP MODE is set to STANDARD. The LAMP MODE is set to either STANDARD or LOW depending on the setting last selected, and you cannot switch the LAMP MODE in about one minute after the lamp is on.

2. INFORMATION menu

Menu option	Feature description
LAMP TIME (LOW)	This menu shows a lamp operating time (hour) calculated assuming that LAMP MODE is LOW. • When the LAMP MODE is STANDARD, this menu shows a longer lamp operating time than the actual time. (See page 28 for the interval of lamp replacement.) • When the lamp operating time is 0 to 10 hours, "0H" is displayed. When the lamp operating time exceeds 10 hours, the actual hours are displayed. • When the lamp operating time reaches 3750 hours, the bar turns yellow. When it reaches 4750 hours, the bar turns red. (The lamp lifetime is 5000 hours.)
INPUT	Indicates the name of the terminal to which the currently projected video signal is being input.
RESOLUTION	Indicates the resolution of the currently projected video signal.
VERTICAL FREQUENCY	Indicates the vertical frequency of the currently projected video signal.
HORIZONTAL FREQUENCY	Indicates the horizontal frequency of the currently projected video signal.
SYNC. TYPE	Indicates the type of the sync signal for the currently projected video signal.

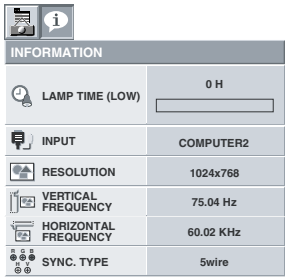

DETAIL MENU

* Menus are not displayed when no signal is supplied to the projector.

- IMAGE
  - COLOR ENHANCER
    - AUTO
    - PRESENTATION
    - STANDARD
    - THEATER
    - USER ↵
      - GAMMA MODE — DYNAMIC, NATURAL, DETAIL
      - BrilliantColor ™ — 0-10
      - RGB-COLOR — ±10
      - RGB-TINT — ±10
  - CONTRAST — ±30
  - BRIGHTNESS — ±30
  - COLOR TEMP.
    - STANDARD
    - LOW
    - HIGH
    - USER ↵
      - CONTRAST R — ±30
      - CONTRAST G — ±30
      - CONTRAST B — ±30
      - BRIGHTNESS R — ±30
      - BRIGHTNESS G — ±30
      - BRIGHTNESS B — ±30
  - COLOR *1 — ±10
  - TINT *1 — ±10
  - SHARPNESS *1 — ±5
  - ADVANCED MENU — OK ↵
    - NOISE REDUCTION *1 — ON, OFF
    - CTI *1 — ON, OFF
    - INPUT LEVEL — ±5
    - CLOSED CAPTION *1 — OFF, CC1, CC2
- INSTALLATION
  - WALL SCREEN
    - BEIGE ↵ — 1-5
    - LIGHT BLUE ↵ — 1-5
    - LIGHT GREEN ↵ — 1-5
    - PINK ↵ — 1-5
    - BLACK BOARD
    - WHITE BOARD
    - OFF
  - LAMP MODE — STANDARD, LOW
  - STANDBY MODE — STANDARD, LOW
  - AUDIO INPUT — AUTO, AUDIO 1, AUDIO 2, MIX ↵ — AU1 □□□□ AU2
  - AUTO POWER ON — ON, OFF
  - AUTO POWER OFF — OFF, 5, 10, 15, 30, 60 min
  - SPLASH SCREEN — ON, OFF
  - BACK COLOR — BLUE, BLACK
  - IMAGE REVERSE — OFF, MIRROR, INVERT, MIRROR INVERT
  - LAMP TIME RESET — OK ↵
- FEATURE
  - ASPECT
    - NORMAL
    - 16:9 ↵ — CENTER, UPPER, LOWER
    - FULL
  - PASSWORD FUNCTION — DISPLAY INPUT ↵, MENU ACCESS ↵
    - LOCK — OK ↵
    - UNLOCK — OK ↵
  - MENU POSITION — 1 (upper left), 2 (lower right)
  - CINEMA MODE *3 — AUTO, OFF
  - VIDEO SIGNAL *5 — AUTO, NTSC, PAL, SECAM, 4.43NTSC, PAL-M, PAL-N, PAL-60
  - WXGA *2 — OFF, AUTO, 1280 x 768, 1280 x 768RB, 1360 x 768, 1366 x 768
  - SETUP *1 — AUTO, OFF, 3.75%, 7.5%
  - LANGUAGE — 日本語, English, Español, Deutsch, Français, Italiano,中文 ,한국어,РУССКИЙ, PORTUGUÊS,SVENSKA,POLSKI
  - RESET ALL — OK ↵
- SIGNAL
  - HORIZ. POSITION — 0-999 *4
  - VERT. POSITION — 0-999 *4
  - FINE SYNC. *1 *2 — 0-31
  - TRACKING *2 — 0-2800 *4
  - COMPUTER INPUT *2 — AUTO, RGB, YC_BC_R/YP_BP_R
  - OVER SCAN — 100-90% *4
  - HOLD *2
    - OFF
    - ON ↵
  - USER — OK ↵
    - BEGIN — 0-99
    - END — 0-99
    - CLAMP POSITION *2 — 1-255
    - CLAMP WIDTH *2 — 1-63
    - VERT. SYNC — AUTO, OFF
    - LPF *1 *2 — ON, OFF
    - SHUTTER (U) — 0-20
    - SHUTTER (L) — 0-20
    - SHUTTER (LS) — 0-20
    - SHUTTER (RS) — 0-20
- INFORMATION
  - LAMP TIME (LOW)
  - INPUT
  - RESOLUTION
  - VERTICAL FREQUENCY
  - HORIZONTAL FREQUENCY
  - SYNC. TYPE *2

*1 Not available with certain signals
*2 Not available when the input signal is from the VIDEO IN or S-VIDEO IN terminal.
*3 Available only when the input signal is TV60, TV50, 480i, or 576i.
*4 The range that can be specified varies across input signals.
*5 Available only when the input signal is from the VIDEO IN or S-VIDEO IN terminal.

Basic operation

Several settings can be adjusted using the menu.

Example : Auto power off time setting

1. Press the MENU button.
2. Select the DETAIL MENU and press the ENTER button (or ▼ button).

3. Press the ◀ or ▶ button to select INSTALLATION.

4. Press the ENTER button (or ▼ button).

5. Press the ▲ or ▼ button to select AUTO POWER OFF.

6. Press the ◀ or ▶ button to adjust the auto power off time.

7. Exit the menu by pressing the MENU button several times.

Important:

- When the button doesn't function, unplug the power cord from the wall outlet. Wait about 10 minutes, plug the power cord in, and try again.
- After selecting the items marked with ↵, press the ENTER button.

Menu Options

Set the following options provided in the respective menus.

1. IMAGE menu

Menu option	Setting	Feature description
COLOR ENHANCER	AUTO	Automatically sets an optimal color balance based on the input signal. Use this setting for most cases.
	PRESENTATION	Makes projected images bright and crisp.
	STANDARD	Makes projected images look natural.
	THEATER	Makes projected images soft and smooth. Best suited for movies.
	USER ↵	Adjusts the gamma curve, color intensity, or balance. (See page 23.)
CONTRAST	±30	Adjusts the contrast of projected images. (See page 23.)
BRIGHTNESS	±30	Adjusts the brightness of projected images. (See page 23.)
COLOR TEMP.	4 options	Adjusts the color temperature. You cannot select this setting when WALL SCREEN in the INSTALLATION menu is set to a setting other than OFF. (See page 23.)
COLOR	±10	Adjusts the color tone of projected images. (See page 23.) You cannot select this setting when the COMPUTER1 or COMPUTER2 is selected as the input source.
TINT	±10	Adjusts the color tint of projected images. (See page 23.) You can select this setting only when NTSC is selected as the input signal.
SHARPNESS	±5	Adjusts the sharpness of projected images. (See page 23.)
ADVANCED MENU	OK ↵	
NOISE REDUCTION	ON/OFF	Reduces noise of projected images when the input signal is noisy.
CTI	ON/OFF	Corrects smeared color borders.
INPUT LEVEL	±5	Adjusts the input level of analog video signals. The input level of the video signal varies across devices to which the projector is connected. A high input level causes projected images to appear solid white, and a low input level causes projected images to appear dark.
CLOSED CAPTION	OFF	Does not display captions.
	CC1/CC2	Displays captions.

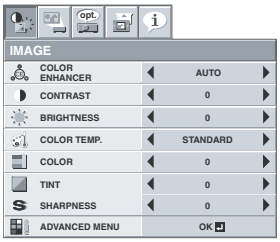

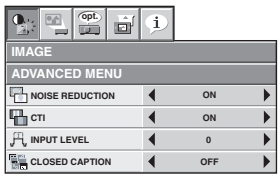

IMAGE ADVANCED menu

- You cannot adjust TINT when the TV50 (PAL, SECAM) signal is inputted.
- You cannot adjust COLOR TEMP. when WALL SCREEN is set to other than OFF.
- When COMPUTER 1 or COMPUTER 2 is selected, COLOR and TINT do not work.
- When COLOR ENHANCER is switched, projected images may be distorted.
- Captions are not displayed while information about the menu, volume setting, or input signal selection is being displayed on the screen.
- The closed caption function displays text information included in the NTSC signal, which is mainly used for TV broadcasting in North America.

2. INSTALLATION menu

Menu option	Setting	Feature description
WALL SCREEN	OFF/BEIGE ↵/ LIGHT BLUE ↵/ LIGHT GREEN ↵/ PINK ↵/ BLACK BOARD/WHITE BOARD	Selects a desired setting based on the color of the screen or wall on which images are projected. (See page 15.) When selecting a setting other than BLACK BOARD/WHITE BOARD, you can fine-tune the color tone to the desired level on the 1 to 5 scale.
LAMP MODE	STANDARD	Select this setting when you want to view images in a well-lit room.
	LOW	Select this setting when you want to view images at a moderate light intensity. The operating sound is consequently reduced, and the lamp lifetime becomes longer. • When this mode is switched, projected images may flicker. • If this mode is frequently switched, the lamp may be deteriorated.
STANDBY MODE	STANDARD	LAN and MONITOR OUT can be activated in STANDARD MODE.
	LOW	Power consumption can be lowered when selecting LOW. However, LAN and MONITOR OUT cannot be activated.
AUDIO INPUT	AUTO	If AUTO is selected, selects AUDIO 1 when the input source is COMPUTER, while selects AUDIO 2 when the input source is VIDEO/S-VIDEO.
	AUDIO 1/AUDIO 2	Select the audio input.
	MIX ↵	Selects MIX signal of AUDIO 1 and AUDIO 2. You can change the balance of AUDIO 1/AUDIO 2 using MIX ↵.
AUTO POWER ON	ON/OFF	When this mode is set to ON, the lamp is automatically lit when the power cord is plugged in the wall outlet. Select ON when you set the projector at the ceiling. • When the lamp is off, the projector is in standby. Use the remote control to turn on the lamp.
AUTO POWER OFF	OFF/5-60 min	Selects a desired timer setting until the projector enters the standby mode when there is no signal input from the source.
SPLASH SCREEN	ON/OFF	Select ON to display the splash screen when the projector is powered on.
BACK COLOR	BLUE/BLACK	Selects the background color that is displayed when there is no signal input from the source.
IMAGE REVERSE	OFF	Select this setting when you want to view images from the front with the projector set on the floor.
	MIRROR	Select this setting when you want to view images from behind the screen with the projector set on the floor.
	INVERT	Select this setting when you want to view images from behind the screen with the projector set at the ceiling.
	MIRROR INVERT	Select this setting when you want to view images from the front with the projector set at the ceiling.
LAMP TIME RESET	OK ↵	Resets LAMP TIME.

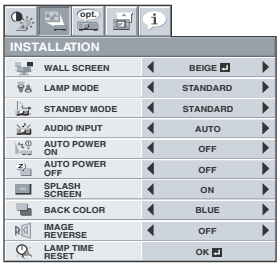

- By default, the LAMP MODE is set to STANDARD. The LAMP MODE is set to either STANDARD or LOW depending on the setting last selected, and you cannot switch the LAMP MODE in about one minute after the lamp is on.

3. FEATURE menu

Menu option	Setting	Feature description
ASPECT	NORMAL	Automatically sets the aspect ratio in relative to the input signal. Use this setting for most cases.
	16:9 ↵	Selects a desired screen position for anamorphically squeezed or horizontally compressed images stored on DVD disks. You can select from CENTER, UPPER, and LOWER by pressing the ENTER button.
	FULL	Select this setting when you want to project images in the full screen.
PASSWORD FUCNTION		Use this setting to activate or deactivate the password lock.
MENU POSITION	2 options	Use this setting to change the position of the menu on the screen.
CINEMA MODE	AUTO/OFF	Select Auto to automatically activate the film mode when the input video signal is a video signal from a film.
VIDEO SIGNAL	8 options	Select Auto to automatically set the appropriate video format in relative to the input signal. If projected images aren't displayed correctly, select a desired video format manually.
WXGA	OFF/AUTO/1280 x 768/ 1280 x 768RB/ 1360 x 768/ 1366 x 768	Select the appropriate format when the input signal is a WXGA video signal and the "AUTO" mode does not display images properly. Select "OFF" when the input signal is other than a WXGA video signal.
SETUP	AUTO	Select this setting to automatically change the SETUP mode.
	OFF	Select this setting to increase the density of black. Use this setting when images are dark.
	3.75%/7.5%	Select this setting to lower the density of black. • When 7.5% is set, the brightness is decreased by the setup cancel function for the U.S.
LANGUAGE	12 languages	Selects a desired language for the menu.
RESET ALL	OK ↵	Resets all menu settings except for PASSWORD FUNCTION and LANGUAGE to the default.

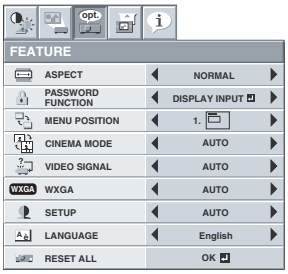

- You can select CINEMA MODE only when the input signal is a TV60, TV50, 480i, or 576i video signal.

4. SINGAL menu

Menu option	Setting	Feature description
HORIZ. POSITION	0-999	Select this setting to adjust the horizontal position of projected images.
VERT. POSITION	0-999	Select this setting to adjust the vertical position of projected images.
FINE SYNC.	0-31	Select this setting to eliminate flickering or blurs, if they appear, when you are viewing projected images.
TRACKING	0-2800	Select this setting to eliminate vertical wide stripes, if they appear, when you are viewing projected images.
COMPUTER INPUT	AUTO	Automatically sets the appropriate setting.
	RGB	Select this setting when you connect the projector to high definition video equipment having R, G, and B output terminals.
	YC_BC_R/YP_BP_R	Select this setting when you connect the projector to a DVD player or other device having Y, C_B, and C_R (or Y, P_B, and P_R) component video output terminals.
OVER SCAN	100%-90%	Use this setting to adjust the display area of projected images.
HOLD	OFF / ON ↵	Use this setting to adjust projected images when flagging occurs in the upper area of the screen.
USER	OK ↵	
CLAMP POSITION	1-255	Use this setting to correct solid white or solid black that appears in projected images.
CLAMP WIDTH	1-63	Use this setting to correct solid black that appears in projected images.
VERT.SYNC	AUTO / OFF	Use this setting to adjust projected images when the motion is not smooth. Select AUTO for most cases.
LPF	ON / OFF	Select this setting to enable or disable LPF.
SHUTTER(U)	0-20	Use this setting to adjust projected images when noise appears in the top part of the image.
SHUTTER(L)	0-20	Use this setting to adjust projected images when noise appears in the bottom part of the image.
SHUTTER(LS)	0-20	Use this setting to adjust projected images when noise appears in the left half of the image.
SHUTTER(RS)	0-20	Use this setting to adjust projected images when noise appears in the right half of the image.

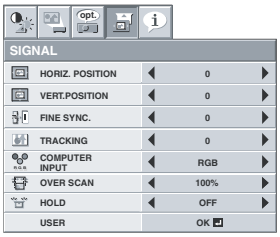

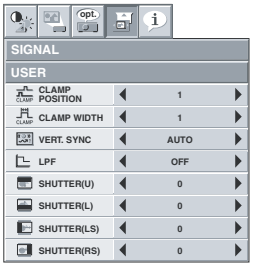

SIGNAL USER menu

- Horizontal strips may appear in the enlarged projected image, though these conditions are not a malfunction.
- When you change the value of the horizontal or vertical position drastically, noise may appear.
- The adjustable range of the vertical position varies depending on the type of the input signal. The image may be stationary even when the value is changed. These conditions are not a malfunction.
- SHUTTER does not work correctly during keystone adjustment.
- When you increase the value of OVER SCAN, noise may appear on the screen.

Important:

- You can set the IMAGE, SIGNAL, and SIGNAL-USER menus only when the signal is input.

5. INFORMATION menu

Menu option	Feature description
LAMP TIME (LOW)	This menu shows a lamp operating time (hour) calculated assuming that LAMP MODE is LOW. • When the LAMP MODE is STANDARD, this menu shows a longer lamp operating time than the actual time. (See page 28 for the interval of lamp replacement.) • When the lamp operating time is 0 to 10 hours, "0H" is displayed. When the lamp operating time exceeds 10 hours, the actual hours are displayed. • When the lamp operating time reaches 3750 hours, the bar turns yellow. When it reaches 4750 hours, the bar turns red. (The lamp lifetime is 5000 hours.)
INPUT	Indicates the name of the terminal to which the currently projected video signal is being input.
RESOLUTION	Indicates the resolution of the currently projected video signal.
VERTICAL FREQUENCY	Indicates the vertical frequency of the currently projected video signal.
HORIZONTAL FREQUENCY	Indicates the horizontal frequency of the currently projected video signal.
SYNC. TYPE	Indicates the type of the sync signal for the currently projected video signal.

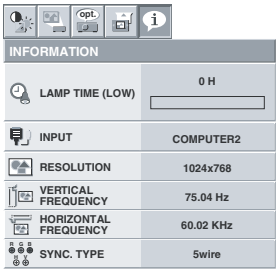

Adjusting projected images

To adjust the brightness (CONTRAST and BRIGHTNESS):

You can make adjustments of the brightness of the projected image using the menu.

(See page 17 or 19 for the menu options.)

1. Display the QUICK MENU or the IMAGE menu.
2. Select CONTRAST or BRIGHTNESS by pressing the ▲ or ▼ button.
3. Adjust the selected option by pressing the ◀ or ▶ button.

To cancel the menu:

4. Press the MENU button.

CONTRAST

Select to adjust the contrast of the image. Every time the ▶ button is pressed, the image becomes brighter and more clearly defined. Every time the ◀ button is pressed, the image becomes darker and less clearly defined.

BRIGHTNESS

Every time the ▶ button is pressed, the image becomes brighter. Every time the ◀ button is pressed, the image becomes darker.

To adjust the color (COLOR and TINT):

You can adjust the color of the projected image using the menu.

(See page 19 for the menu options.)

1. Display the IMAGE menu.
2. Select COLOR or TINT by pressing the ▲ or ▼ button.
   - COLOR and TINT is selectable only when the input signal is VIDEO.
   - TINT is selectable only when the NTSC or 4.43NTSC signal is input.
3. Adjust the selected option by pressing the ◀ or ▶ button.

To cancel the menu:

4. Press the MENU button.

COLOR

Use to adjust the color density of the projected image. Every time the ▶ button is pressed, the color becomes darker. Every time the ◀ button is pressed, the color becomes lighter.

TINT

Use to adjust the tint of the projected image. Every time the ▶ button is pressed, the image appears more greenish. Every time the ◀ button is pressed, the image appears more reddish.

To sharpen or soften the projected image (SHARPNESS):

You can adjust the sharpness of the projected image using the menu.

(See page 17 or 19 for the menu options.)

1. Display the QUICK MENU or the IMAGE menu.
2. Select SHARPNESS by pressing the ▲ or ▼ button.
3. Adjust the selected option by pressing the ◀ or ▶ button.

To cancel the menu:

4. Press the MENU button.

To adjust the tone of white (COLOR TEMP.):

You can select a preset color temperature (white tone) using the menu.

(See page 17 or 19 for the menu options.)

1. Display the QUICK MENU or the IMAGE menu.
2. Select COLOR TEMP. by pressing the ▲ or ▼ button.
3. Select your desired color temperature by pressing the ◀ or ▶ button.

To cancel the menu:

4. Press the MENU button.

To adjust the tone of white (To customize the color temperature):

To set (and store) a user-defined color temperature, perform the following procedure.

(See page 19 for the menu options.)

1. Select COLOR TEMP. in the IMAGE menu.
2. Press the ◀ or ▶ button to select USER ⏎.
3. Press the ENTER button.
4. Press the ▲ or ▼ button to select the desired setting.
5. Press the ◀ or ▶ button to adjust the selected setting.
6. Repeat steps 4 and 5 for optimal adjustment results.

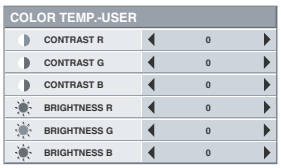

To cancel the menu:

7. Press the MENU button.

To enable the stored color temperature:

1. Set COLOR TEMP. to USER ⏎ in the IMAGE menu.

About color temperature

There are different variations in white color. Color temperature is a way to show these variations in white. When the temperature is low, white appears reddish. When the temperature rises, white appears bluish. For example, you can change the temperature using the following procedures.

To raise the temperature: Increase CONTRAST B (blue) and decrease CONTRAST R (red).

To reduce the temperature: Decrease CONTRAST B (blue) and increase CONTRAST R (red).

- If you set CONTRAST R, G, and B to negative values, the brightness of the image can't retain the original even when you maximize the value of CONTRAST in the QUICK MENU or the IMAGE menu.

Color Enhancer

You can set user-defined values for the brightness and hue using the menu. (See page 19 for the menu options.)

1. Display the IMAGE menu.
2. Select COLOR ENHANCER by pressing the ▲ or ▼ button.
3. Select USER ⏎ by pressing the ◀ or ▶ button.
4. Press the ENTER button.
5. Select a setting you want to set.

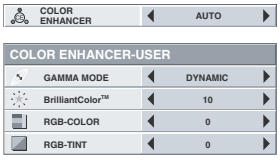

GAMMA mode

Use this setting to set an optimal gamma value and modulation of lamp power. The level of brightness can be adjusted for subdued colors.

DYNAMIC .....Select when viewing crisp, clear images in a brightly lit room or strong daylight.
The level of brightness is adjusted to higher levels.

NATURAL .....Select when viewing images of which colors are more faithfully reproduced.
The level of brightness and vividness is adjusted to optimal levels.

DETAIL .....Select when viewing images of which brightness should be kept relatively low, such as movies and music video clips.

BrilliantColor™

Use this setting to make colors with medium brightness, such as yellow and the skin tone appear natural. Press the ◀ button to decrease the value to lessen the effect. Press the ▶ button to increase the value to heighten the effect. (BrilliantColor™ has no effect at value 0.)

6. Select a value by pressing the ◀ or ▶ button.
   - For more enhanced color reproduction, set BrilliantColor™ to 0. The white area of the color wheel is disabled, and you can reproduce true-color images.

RGB-COLOR

Use to adjust the color intensity of the projected image. Every time the ▶ button is pressed, the color becomes thicker. Every time the ◀ button is pressed, the color becomes lighter.

RGB-TINT

Use to adjust the color balance of the projected image. Every time the ▶ button is pressed, the image appears more greenish. Every time the ◀ button is pressed, the image appears more reddish.

This projector automatically and properly projects video signals being input from the computer. However, some video signals may not be projected, depending on the type of the computer. When it occurs, press the AUTO POSITION button. (See page 14.) When the signal is still not projected properly, adjust the projected image using the SIGNAL menu.

How to adjust the image supplied from the computer using the menu:

Perform the following procedures when the following conditions occur.

When wide strips appear
..... adjust TRACKING in the SIGNAL menu.

When the projected image flickers
When the projected image is blurred
..... adjust FINE SYNC. in the SIGNAL menu.

When the projected image is displaced horizontally
..... adjust HORIZ.POSITION in the SIGNAL menu. Every time the ◀ button is pressed, the image moves to the right. Every time the ▶ button is pressed, the image moves to the left.

When the projected image is displaced vertically
..... adjust VERT.POSITION in the SIGNAL menu. Every time the ◀ button is pressed, the image moves down.
Every time the ▶ button is pressed, the image moves up.

When the top part of the image flags
..... change the setting of HOLD in the SIGNAL menu. To select ON ↵ , press the ENTER button, and adjust BEGIN or END to minimize the flagging.

A solid black or solid white appears in the image
..... adjust CLAMP POSITION or CLAMP WIDTH in the SIGNAL - USER menu.

When the motion is not smooth.
..... adjust VERT. SYNC in the SIGNAL - USER menu.
Select AUTO for most cases.

Noise appears in the right or left half of the image.
..... adjust SHUTTER(LS) or SHUTTER(RS) in the SIGNAL - USER menu.

Noise appears in the top or bottom part of the image.
..... adjust SHUTTER(U) or SHUTTER(L) in the SIGNAL - USER menu.

1. Display the SIGNAL menu.
2. Press the ▲ or ▼ button to select a setting to adjust.
3. Adjust the selected setting by pressing the ◀ or ▶ button.

To cancel the menu:

4. Press the MENU button.
   - Do not change the settings of the SIGNAL menu for ordinary use.

Simple method to adjust the image position

To adjust the horizontal position:

1. Align the left edge of the image with the left side of the screen by adjusting HORIZ.POSITION. Then, align the right edge of the image with the right side of the screen by adjusting TRACKING.
2. Repeat step 1 to complete the adjustment of the horizontal position.

To adjust the vertical position:

3. Align the upper edge of the image with the upper side of the screen by adjusting VERT.POSITION.

LPF (Progressive filter)

You can select to enable or disable the LPF. This option is set to OFF normally.

Vertical or horizontal streaks may appear in the projected image, depending on the type of the DVD player, game console or computer in use. If this occurs, reduce noise by enabling the LPF. Projected images appear slightly faint.

Freeze

To stop the motion in the image temporarily (or to display a still image):

Press the FREEZE button on the remote control.

- The image freezes temporarily.

To resume the motion in the image:

Press the FREEZE button on the remote control again.

Important:

- Do not keep displaying a still picture for an extended period of time, as the afterimages may linger on the screen.

Password function

This projector provides the password function that is intended to prevent wrong operations by children and set controlled access for specified users.

DISPLAY INPUT..... When the projector is turned on, the startup screen (or splash screen) appears and stays on the screen until the password is entered. When the password is entered, the startup screen switches to the regular operation screen.

MENU ACCESS..... All the buttons except for the POWER button on the projector are disabled. (The buttons on the remote control are enabled.) You can use this mode to prevent wrong operations by children and set controlled access for specified users.

To enable the password function:

1. Display the FEATURE menu.
2. Press the ▲ or ▼ button to select PASSWORD FUNCTION.
3. Press the ◀ or ▶ button to change the mode among DISPLAY INPUT ↵, MENU ACCESS ↵.
   - When the password has already been set, the mode never changes. Press the ENTER button to cancel the password function and try again.
4. Press the ENTER button.
   - The screen for setting the password function appears.

5. Press the ENTER button.
   - The screen for entering a password appears.

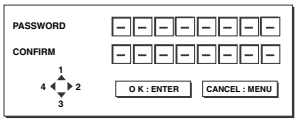

6. Enter a 4 - 8 digit password using the ▲, ▼, ◀ or ▶ buttons on the remote control as shown below.
   (▲=1, ▶=2, ▼=3, ◀=4)
7. Press the ENTER button.
   - To cancel the procedure, press the MENU button.
8. Enter the password again for confirmation using the same steps.
9. Press the ENTER button.
   - If the entered passwords are incorrect, an error message appears.
   - To cancel the procedure, press the MENU button.

To cancel the password function:

1. Display the FEATURE menu.
2. Press the ▲ or ▼ button to select PASSWORD FUNCTION.
3. Press the ENTER button.
   - The screen for canceling the password function appears.

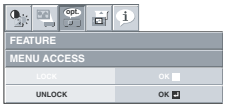

4. Press the ENTER button.
   - The screen for entering the password appears.

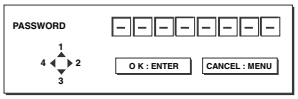

5. Enter a 4 - 8 digit password using the ▲, ▼, ◀ or ▶ buttons on the remote control as shown below.
   (▲=1, ▶=2, ▼=3, ◀=4)
6. Press the ENTER button.
   - If you enter a wrong password, an error message appears.
   - To cancel the procedure, press the MENU button.

Important:

- When the screen for entering the password is displayed, to disable the password function, hold down the SOURCE and POWER buttons on the control panel together for about three seconds.

Magnify

By pressing the MAGNIFY button on the remote control, you can magnify the image to view the details.

- The MAGNIFY mode doesn't function with some input signals. For details, see page 35.
- The MAGNIFY mode doesn't work with video or S-video signal.

MAGNIFY

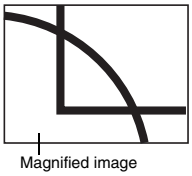

Magnified image

To use the MAGNIFY mode:

1. Press the MAGNIFY button.
   - You can select the area to be magnified by pressing the ▲, ▼, ◀ or ▶ button on the remote control.
   - You can change the magnification of the selected area by pressing the VOLUME ▲ or ▼ button.
2. Press the MAGNIFY button again to exit the MAGNIFY mode.
   - The regular operation screen will appear.

Important:

- In the MAGNIFY mode, you can't adjust the volume.

Supervising and controlling by computer

You can supervise and control the projector's operation using a personal computer via a LAN network.

- To supervise and control the projector, install the software "Projector-Control Device Installer*" contained in the attached CD-ROM. For the installation procedure and usage of the software, see "User Manual for LAN Control Utility" contained in the attached CD-ROM.
  - *) Functions
  - Setting of the projector's IP address
  - Setting of password, display language, and LAN control
  - PJLink™ certification setting (telnet function)
  - Startup of the controlling / supervising tool (ProjectorView) using the Web browser

Major functions

ProjectorView

The controlling / supervising tool using the Web browser

PJLink™

This projector supports standard protocol PJLink™ for projector control and you can control and monitor projector's operations using the same application among projectors of different models and different manufacturers.

About PJLink™

- To use PJLink™ function, the PJLink™ application software is required.
- For the specifications of PJLink™, access to the Web site of Japan Business Machine and Information System Industries Association (JBMIA). (http://pjlink.jbmia.or.jp/english)
- This projector is fully compliant to the specifications of JBMIA PJLink™ Class 1. It supports all the commands defined by PJLink™ Class 1, and the compliance has been verified with the PJLink™ standard specifications Version 1.0.

Connection

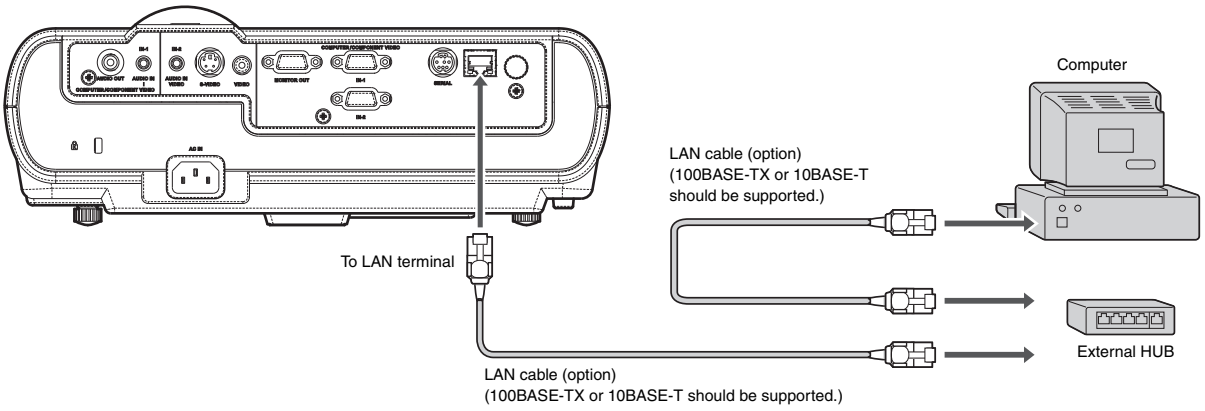

- Use a straight-through category-5 cable for LAN connection.
- Don't touch the metal parts of the LAN connector and LAN cable because static electricity may be discharged from your body, causing damage to the projector.

Using the User Manual

The User Manual for LAN Control Utility is prepared in the Portable Document Format (PDF) in the CD-ROM.

Opening the User Manual:

1. Load the CD-ROM into the CD-ROM drive.
2. Open CD-ROM "XD221U-ST".
3. Double-click on "MANUAL_LAN.HTML" within the CD-ROM. A language selection list for the User Manual will be displayed.
4. Move the mouse pointer to the desired language and click.

STANDBY MODE (See page 20.) in INSTALLATION MENU is set to LOW as a factory default. When STANDBY MODE is set to LOW, LAN connection is not available. To enable the LAN connection, set the STANDBY MODE to STANDARD.

Lamp replacement

This projector is equipped with a lamp to project images. This lamp is a consumable. It may burn out or its brightness may decrease during use. In such cases, replace the lamp with a new one as soon as possible. Be sure to replace the lamp with a new lamp separately sold that is exclusive to this projector. Contact your dealer for purchase of the lamp.
Replace the spare lamp using the lamp attachment unit that is equipped with the spare lamp (separately sold) designed specifically for this projector.

Spare lamp for XD221U-ST: VLT-XD221LP

Caution:

- Do not remove the lamp immediately after using the projector. You may get burned because the lamp is very hot after use.
- Before replacing the lamp, press the POWER button to turn off the lamp and wait for two minutes for lamp to cool down. Unplug the power cord from wall outlet and wait one hour for the lamp to cool down completely.
- Do not remove the lamp except for replacement. Careless handling can cause injury or fire.
- Do not touch the lamp directly. It may break and cause injury or burn.
- Be sure not to drop the lamp lid screw into the projector. Also be sure not to put metal or any flammable objects inside because it may cause fire or electric shock. If any objects should fall inside, unplug and contact your dealer.
- Install the lamp securely to prevent failure and fire.
- If the lamp should break, small glass fragments may fall out through the grilles and some may remain inside of the projector or the lamp box. When taking the lamp box out, be sure to turn over the projector and hold the handle of the lamp box to avoid injury due to the glass fragments.
- If the lamp should break, never shake the lamp box or hold it in front of your face after removing it. The glass fragments may fall out and cause injury to your eyes.
- Be sure to use the lamp dedicated to this projector, VLT-XD221LP for XD221U-ST. Use of other lamps may cause a failure of the projector.
- Do not use any other tools for replacing the spare lamp, and be sure to use the lamp attachment unit that is equipped with the spare lamp (separately sold) designed specifically for this projector. Use of other tools may cause a failure of the projector.

Make sure that the projector is securely held in place.

1. Remove the cover (a) of the screw fixing the lamp cover with a fingernail. If it is difficult to remove it with a fingernail, use a fine-tipped tool such as flathead screwdriver.

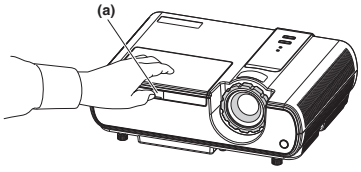

2. Remove the screw (b) and slide the lamp cover (c) for removal.

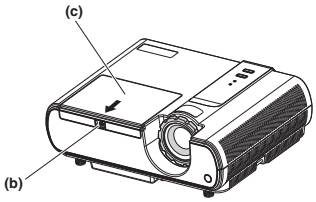

The lamp unit is fixed in position with two retaining claws (d) inside so the lamp attachment unit (e) designed specifically for this projector is required to replace the lamp.
Do not pull out the lamp forcibly. The lamp unit may be irretrievably damaged.
A new lamp unit can be installed without the lamp attachment unit.

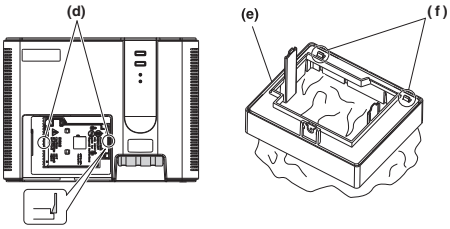

3. Loosen the two screws (g) indicated as arrows (→) in figure, and mount the lamp attachment unit (e).
Slide the lamp attachment unit in the direction indicated by a white arrow after the installation of it, and hook the claw (f) into the hole of the device to fix the lamp attachment unit.
If not hooking the claw, the lamp attachment unit will be lifted without being fixed in the precise position.

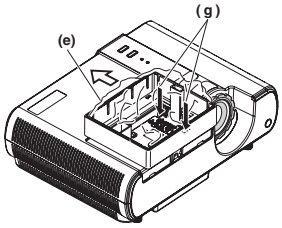

(Caution)
When replacing the lamp, do not remove the screws other than those in the above picture. If do, it might cause the failure of product.

When the projector is mounted to the ceiling:
Secure the lamp attachment unit and the projector with the screw (h) that come with the lamp attachment unit. Otherwise, the lamp unit may fall from the inside and cause injuries.

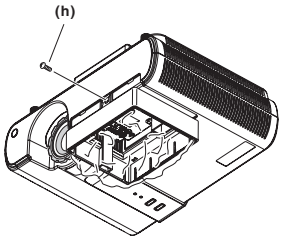

- Contact your dealer when replacing the lamp unit with the projector mounted to the ceiling.

4. Pull up the handle (i), and then pull out the lamp unit (j) by the handle.

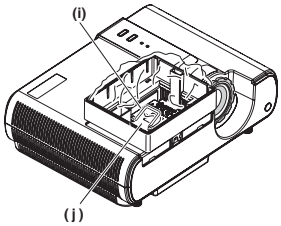

5. Remove the lamp attachment unit.

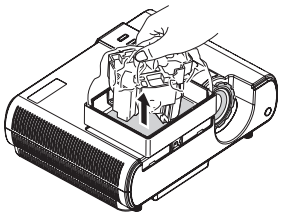

- Pull the lamp unit out of the projector slowly. If it is pulled out quickly, the lamp may break, scattering glass fragments.
- Do not spill liquid on the removed lamp unit or do not place it near any flammable object or where children can reach to prevent injuries or fire.

When the projector is mounted to the ceiling:

Confirm that the lamp unit (j) is securely held inside the lamp disposable bag of the lamp attachment unit. And then loosen the screw (h) that come with the lamp attachment unit. Then remove the lamp attachment unit.

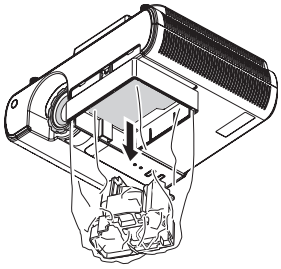

6. Load a new lamp unit securely into the projector in the right orientation.
7. Secure the lamp cover (c) with screws (b) back again, and mount the cover (a).
   - Make sure that the lamp cover is secured firmly. Otherwise, the POWER indicator flashes red and green, disallowing the projector to be powered on.

Reset of the lamp operation time

1. Connect with the Power cord, and turn the power on.
2. Display DETAIL MENU. (See page 16.)
3. Select LAMP TIME RESET in INSTALLATION menu, and press ENTER button to reset lamp operation time.

Important:

- The projector doesn't turn on if the lamp cover isn't attached securely.
- Be sure to reset the lamp operation time whenever you replace the lamp.
- Do not reset the lamp operation time unless you replace the lamp.

Caution:

- The lamp is fragile. If it is broken, be careful not to cut yourself with glass fragments.
- Contact your dealer for a new lamp.

Interval of lamp replacement

When the lamp lifetime notice is issued, the lamp replacement is recommended even if the lamp is lit normally. Decrease in luminescence and/or color brightness indicates that the lamp needs to be replaced. When the lamp operation time exceeds the time elapsed until the lamp lifetime notice*1 is issued, the indicator will blink alternately green and red while the lamp is lit (while the lamp is not lit, the indicator will blink red only) and the lamp replacement message will appear on the screen for one minute every time the lamp is turned on. When the lamp operation time exceeds the time elapsed until the lamp lifetime warning*2 is issued, the replacement message (LAMP EXCHANGE) will appear on the screen for one minute at fixed intervals*4 thereafter.

When the lamp operation time exceeds the time elapsed until the lamp lifetime*3, the projector keeps on issuing the warning, shuts off automatically after ten minutes, and then enters the standby state.

XD221U-ST
*1 3750 Hours *2 4750 Hours *3 5000 Hours*5

The times above are when LAMP MODE of the INSTALLATION menu is set to LOW. When it is set to STANDARD, this duration will be shortened.

*4 These intervals vary depending on the lamp mode setting.

*5 When LAMP MODE is set to STANDARD, the time elapsed until the lamp lifetime will be shortened to 3000 hours.

Important:

- Do not open the lamp cover when the projector is set at a ceiling or a high place. Lamp fragments may fall from the inside if the lamp were broken.
  Please contact your dealer when you need to replace the lamp with a new one.

Caution:

- This projector uses a lamp that contains mercury. Disposal of the lamp or the projector with the lamp may be regulated due to environmental considerations. For disposal or recycling information, please contact your local authorities or the Electronic Industries Alliance: www.eiae.org. (For US only).

Troubleshooting

Before asking for repair of the projector, check the following. If the symptom persists, stop using the projector, be sure to unplug the power plug, and then contact your dealer.

No image appears on the screen.

<table>
<tr><th>Problem</th><th>Solution</th></tr>
<tr><td>Power can not be turned on.</td><td>• Check whether the indicators are on or off and how they are lightning.
<table>
<tr><th>POWER</th><th>STATUS</th><th>Solution</th></tr>
<tr><td>○
Off</td><td>○
Off</td><td>• Connect the power cord to the projector.
• Plug the power cord into a wall outlet.</td></tr>
<tr><td rowspan="3">Steady red</td><td>○
Off</td><td>• If any objects are blocking the air inlet or outlet grille, remove them and carry out the following.
1. Unplug the power cord from the wall outlet.
2. Make sure that the projector has cooled off.
3. Plug the power cord into the wall outlet.
4. Press the POWER button.</td></tr>
<tr><td>Blinking orange</td><td>• If any objects are blocking the air inlet or outlet grille, remove them.
• Don't expose the air outlet grilles to hot air emitted from a heating appliance.</td></tr>
<tr><td>Blinking green</td><td>• After the STATUS indicator stops blinking, press the POWER button.
• If you unplug the power cord while the fan is rotating, the lamp may not turn on about 1 minute when you plug the power cord next time.
• The lamp can't turn on again for 1 minute after it goes out.
• Press the POWER button several times.</td></tr>
<tr><td rowspan="2">Blinking red / green</td><td>○
Off</td><td>• Attach the lamp cover on the top.</td></tr>
<tr><td>Steady
or
Blinking</td><td>• Unplug the power cord from the wall outlet and contact your dealer.</td></tr>
</table></td></tr>
<tr><td>No image appears on the screen.</td><td>• Cancel the AV mute by pressing the AV MUTE button.
• Check that the lens cap is removed.
• It may take about 1 minute for the lamp to light up.
• The lamp fails to light up on rare occasions. In such a case, wait for a few minutes and then try again.
• If the projector was turned off before the lamp was cooled down sufficiently last time, the fan may start rotating and the POWER button may not work after the power cord is plugged. After the fan stops rotating, press the POWER button to turn back on the POWER indicator.
• Check that the intake vent is clean.
• Check that the lamp cover is closed. (See page 28.)
• Check that the cables connected to the external devices are not broken.
• When an extension cable is being used, replace it with the supplied cable for check.
• When images are displayed correctly, add an RGB signal amplifier to the extension cable.</td></tr>
<tr><td>Power turns off.</td><td>• This problem may occur when the intake vent and/or exhaust vents are blocked. (In such a case, the STATUS indicator brinks orange.)
→ Remove the objects blocking the intake vent and/or exhaust vents and then carry out the following procedure.
1. Wait for the intake fan and/or exhaust fan to stop. (Wait until the STATUS indicator goes out.)
2. Unplug the power cord from the wall outlet.
3. Wait about 10 minutes.
4. Plug the power cord into the wall outlet.
5. Press the POWER button.
• Check that AUTO POWER OFF has been set to OFF.
• If the lamp has deteriorated, it may go out after a while it illuminates.</td></tr>
<tr><td>The screen for entering the password appears.</td><td>• PASSWORD FUNCTION in the FEATURE menu has been set to DISPLAY INPUT to enable the password lock.
→ Enter the password or contact the person in charge of management of the projector. (See page 25.)</td></tr>
<tr><td>"NO SIGNAL" is displayed.</td><td>• Turn on the power of the connected device, or check whether there is something wrong with the connected device.
• Check whether the external device output signals. (Check this especially when the external device is a notebook computer.)
• Check that the cable connected to the external device isn't defective.
• Check that the projector is connected to the external device using the correct terminals.
• Check that the connected device is correctly selected as the input source.
• When an extension cord is being used, replace it with the supplied cable and check whether images are projected correctly. If images are projected correctly, use an RGB signal amplifier along with the extension cord.</td></tr>
</table>

Images are not displayed correctly.

Problem	Solution
Projected images are shaking. Projected images are displaced.	• Check that the cable connected to the external device isn't intermittent. • Connect the cable's plug with the external device's connector firmly. • Press the AUTO POSITION button. • Some computers output out-of-spec signals on rare occasion. Adjust the SIGNAL menu. (See page 24.) • When the input signal is a WXGA video signal, confirm the setting selected in WXGA in the FEATURE menu. • When the input signal is other than a WXGA video signal, select "OFF" in WXGA in the FEATURE menu.
Projected images are distorted.	• Adjust the projector and the screen so that they are perpendicular to each other. (See page 9.)
Projected images are dark.	• Adjust BRIGHTNESS and CONTRAST in the QUICK MENU or the IMAGE menu. (See page 23.) • Replace the lamp. (See page 27.)
Projected images are blurred.	• Adjust the focus. (See page 13.) • Clean the lens. • Press the ◀ or ▶ button on the remote control to eliminate flicker. • Adjust TRACKING and FINE SYNC. in the SIGNAL menu. (See page 24.) • Adjust BRIGHTNESS and CONTRAST in the QUICK MENU or the IMAGE menu. (See page 23.) • Adjust the projector and the screen so that they are perpendicular to each other. (See page 9.)
Afterimages persist on the screen.	• This phenomenon is improved by keeping projecting an evenly bright image. (Such "image burn-in" phenomenon where afterimages persist on the screen may occur if a stationary image is kept displayed on the screen for a long time.)
White dots are seen on projected images. Black dots are seen on projected images.	• This phenomenon is normal for a DLP projector and is not a malfunction. (A very small number of pixels may visibly or invisibly be persistent all the time, but they are not a sign of system malfunctions. Over 99.99% of the pixels are effective.)
Fine streaks are seen on projected images.	• This is due to interference with the screen surface and is not a malfunction. Replace the screen or displace the focus a little. • Vertical or horizontal streak noise may appear on the projected image, depending on the type of the DVD player, game console or computer you use. In such a case, you can reduce such streak noise by enabling the LPF.
Projected images become wavy.	• Connect the plugs of the cables to external devices securely. • Keep the projector away from equipment generating interfering radio waves. • When the keystone adjustment is carried out, the image may not be displayed correctly because of the type of input signal. This isn't a product malfunction. In this case, readjust the keystone so that the amount of keystone correction is as small as possible.
Hue is not appropriate.	• Check that the cables connected to the external devices are not broken.
Tint in projected images is incorrect.	• Check that COMPUTER INPUT in the SIGNAL menu is correctly set. (See page 22.) • Check that the cable connected to the external device isn't broken.
Different color tint.	• When comparing images projected by two projectors, tints in the displayed images may be different because of variation between their optical components. This is not a malfunction. • When comparing the image projected by this projector with those displayed on the television or PC monitor, tints in the displayed images may be different because of difference in the range of color reproducibility. This is not a malfunction.
Only the motion areas in the images supplied from the computer aren't displayed.	• This is caused by the computer being used. Contact the manufacturer of your computer.
Projected images are obscured.	• Match the output resolution of your computer with the resolution of the projector. For the method to change the output resolution of the computer, contact the manufacturer of your computer. (See page 35.) • Some images and texts appear obscured during the keystone adjustment. In such cases, use the projector without applying the keystone adjustment. (See page 12.)
Projected images are flickering	• After the Power button or On button on the remote has been pressed, or the Lamp mode setting has changed, images may be flickering until the lamp lights stably. This is an expected behavior. • When selecting the input signal, Auto Position, and Color Enhancer, the projected image may be flickering temporarily. This is not a product malfunction.

Others

Problem	Solution
The exhaust vents emit warm air.	• This air comes out after cooling the inside of the projector. You may feel hot, but this is not a malfunction.
No audio is output.	• Check that the volume isn't set to low.
The menu can't be used.	• The microcomputers inside the projector may be wrongly operating because of noise. → Press the POWER button to turn off the lamp and unplug the power cord from the wall outlet. Wait about 10 minutes, plug the power cord in, and try again.
"TEMPERATURE!!" is displayed.	• This indication appears when the ambient temperature rises high. When the ambient temperature stays high, the lamp goes out. → Eliminate any causes of the rise in the ambient temperature. • This indication appears when the air inlet or outlet grille is blocked. When they are kept blocked, the lamp goes out. → Remove the objects blocking the air inlet or outlet grille.
The ⃠ mark appears.	• This mark appears when ineffective operation is carried out. This isn't a product malfunction.
The remote control doesn't function easily or at all.	• Check that the batteries are loaded in the remote control or the batteries are not weak. (See page 8.) • Check that the remote control sensor isn't exposed to direct sunlight or fluorescent light. (See page 8.) • Use the remote control within its operation range. (See page 8.) • Use the remote control at least 10 cm away from the projector.
The SOURCE button on the control panel doesn't function.	• PASSWORD FUNCTION in the FEATURE menu has been set to MENU ACCESS to enable the password lock. → Cancel the password lock or contact the person in charge of management of the projector. (See page 25.)
Abnormal sound is heard.	• Because the color wheel spins at a high speed, metallic sounds may be heard in rare occasions. Such symptom is not a malfunction.

If the following problem occurs after the lamp is replaced, check the following first.

Problem	Solution
The projector does not turn on.	• Fit the lamp cover securely. (See page 28.) • Reset the lamp operating time. (See page 28.)
The STATUS indicator blinks.	• Reset the lamp operating time. (See page 28.)

Maintenance

Warning:

Do not use flammable solvents (benzene, thinner, etc.) and flammable aerosols when cleaning the projector body and lens. Flammable substances may ignite causing fire or breakdown while the lamp is illuminating.

Caution:

Be sure to turn off the lamp and unplug the power cord from the wall outlet before you perform any maintenance on the projector.

Cleaning of the projector and the ventilation slots

Use a soft cloth to clean the projector and the ventilation grilles. When the grilles become dirty, wipe them with a soft cloth dampened with diluted mild detergent, and then wipe them with a dry cloth.

To protect the surface of the projector from fading or deteriorating:

- Do not spray insecticide on or inside the projector.
- Do not use benzin or thinner to clean it.
- Do not let rubber or plastic materials contact with projector.

Cleaning of the lens

Use a standard lens-cleaning brush or a piece of lens tissue dampened with lens cleaning fluid. The lens surface is fragile. Use only recommended, nonabrasive lens-cleaning materials. Do not touch the lens with your fingers.

Indicators

This projector has two indicators, each of which shows the operation condition of the projector.
The following offer solutions to possible problems. If these problem persist, turn the projector off and consult your dealer.

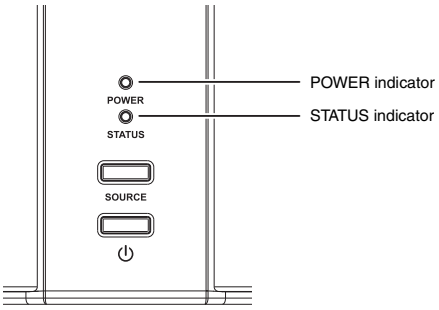

Normal condition

POWER	STATUS	CONDITION	NOTE
Steady red	Off	Stand-by	
Steady green	Blinking green	Lamp stand-by (about 1 minute)	The POWER button cannot be used to switch between on and off.
Steady green	Steady green	The power is on. (Normal condition)	

Abnormal condition

POWER	STATUS	CONDITION	POSSIBLE SOLUTION
Steady green or Steady red	Blinking orange	Abnormal temperature • The ventilation grilles is clogged with dust or dirt. • The room temperature is high.	• Clean the ventilation grilles. • Relocate the projector to a cooler place.
Steady red	Blinking green	The protection circuit is working or the lamp is in an abnormal condition.	• Wait until the STATUS indicator goes out, then press the POWER button. • If the above solution is not effective, replace the lamp.
Steady green	Blinking green/red	The lamp operation time exceeds the time elapsed until the lamp lifetime notice while the power is on. (See page 28.)	Replace the lamp. Change with a new lamp if this problem recurs.
Steady red	Blinking red	The lamp operation time exceeds the time elapsed until the lamp lifetime notice while the power is off. (See page 28.)	
Steady red	Steady red	The lamp operation time exceeds the time elapsed until the lamp lifetime. (See page 28.)	
Blinking green/red	Off	The lamp cover isn't closed.	Close the cover correctly.
Blinking green/red	Steady or Blinking	Abnormal.	Contact your dealer.

Specifications

Type	DLP™ DATA projector
Model	XD221U-ST
Rated power supply	100 - 240 V AC, 50 / 60 Hz
Power consumption	2.7 A During standby: AC 100-120V: 9W (when STANDBY MODE is STANDARD) 0.4W (when STANDBY MODE is LOW) AC 220-240V: 10W (when STANDBY MODE is STANDARD) 0.5W (when STANDBY MODE is LOW)
Display Technology	0.55-inch Single chip Digital Micromirror Device (DMD) Pixels 1024 x 768 = 786432 pixels
Colors	16770000 colors
Projection lens	F 2.8, f = 7.7 mm
Light source lamp	180 W
Picture size	40 - 300 inch (aspect ratio 4:3)
PC compatibility	Resolution:640x400 (Expand) - 1024x768 (Real) - 1280x1024 (Compress) Sync on Green available
Video compatibility	NTSC / NTSC 4.43 / PAL (including PAL-M, N) / SECAM / PAL-60 Component Video (DVD/HDTV) (480i, 576i, 480p, 576p, 1080i, 720p)
Speaker	10 W Mono, Round type ø5 cm x 1
S-video input	Luminance signal: 1.0 Vp-p 75 Ω (negative sync.) Chroma signal: 0.286 Vp-p 75 Ω (burst signal)
Video input	1.0 Vp-p 75 Ω (negative sync.)
Audio input	350 mVrms, 10 kΩ or more
Analog RGB input	RGB: 0.7 Vp-p 75 Ω (negative sync.) YPBPR/YCBCR : Y:1.0 Vp-p (negative sync.) PBPR/CBCR:0.7 Vp-p HD/CS : TTL level (positive or negative) VD : TTL level (positive or negative)
Control connector	Serial terminal (RS-232C) (Mini DIN)
Outside dimensions	320 x 104 x 236 mm (width x height x depth)
Weight	Approx. 3.2 kg
Length of power cord	114 inch (1.8 m)
Temperature, humidity (performance guaranteed)	+41°F (+5°C) - +95°F (+35°C), 30 - 90%

- **The specifications and outside appearance of the projector are subject to change without prior notice.**

Connectors

COMPUTER IN/OUT (Mini D-SUB 15-pin)

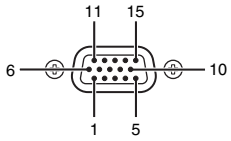

IN

pin No.	Spec.
1	R(RED)/CR
2	G(GREEN)/Y
3	B(BLUE)/CB
4	GND
5	GND
6	GND
7	GND
8	GND
9	DDC5V
10	GND
11	GND
12	DDC Data
13	HD/CS
14	VD
15	DDC Clock

OUT

pin No.	Spec.
1	R(RED)/CR
2	G(GREEN)/Y
3	B(BLUE)/CB
4	-
5	GND
6	GND
7	GND
8	GND
9	-
10	GND
11	-
12	-
13	HD/CS
14	VD
15	-

Dimensional drawings (unit : mm)

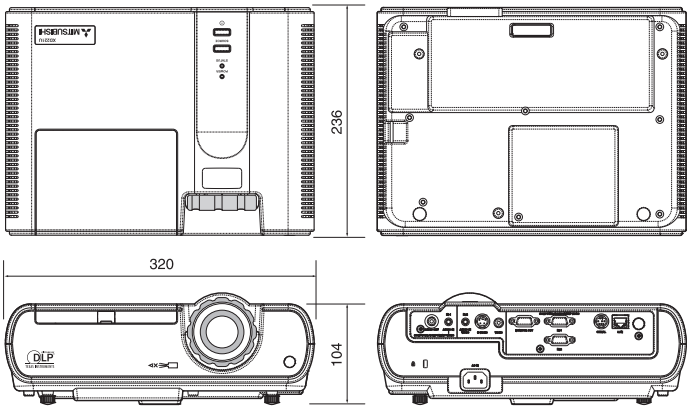

What's included in the box

AC power cord	for US	J2552-0063-01	1 Remote control
	for EU	J2552-0066-01	1 Safety Manual/Quick Start up
	for UK	J2552-0065-01	1 CD-ROM
1 RGB cable for PC		J2552-0072-03	2 Battery
			1 Lens cap
			1 Soft case

Replacement part

(Option / Not included in the box)

Spare lamp for XD221U-ST VLT-XD221LP

Specification of RGB signals in each computer mode of the projector

Signal mode	resolution (H x V)	horizontal frequency (kHz)	vertical frequency (Hz)	XD221U-ST (H x V)	
TV60, 480i (525i)	-	15.73	59.94	1024 x 768	*2
TV50, 576i (625i)	-	15.63	50.00	1024 x 768	*2
1080i 60 (1125i 60)	-	33.75	60.00	1024 x 576	*2
1080i 50 (1125i 50)	-	28.13	50.00	1024 x 576	*2
480p (525p)	-	31.47	59.94	1024 x 768	*2
576p (625p)	-	31.25	50.00	1024 x 768	*2
720p 60 (750p 60)	-	45.00	60.00	1024 x 576	*2
720p 50 (750p 50)	-	37.50	50.00	1024 x 576	*2
CGA84	640 x 400	37.86	84.13	1024 x 640	
CGA85	640 x 400	37.86	85.08	1024 x 640	
VGA60	640 x 480	31.47	59.94	1024 x 768	
VGA72	640 x 480	37.86	72.81	1024 x 768	
VGA75	640 x 480	37.50	75.00	1024 x 768	
VGA85	640 x 480	43.27	85.01	1024 x 768	
SVGA56	800 x 600	35.16	56.25	1024 x 768	
SVGA60	800 x 600	37.88	60.32	1024 x 768	
SVGA72	800 x 600	48.08	72.19	1024 x 768	
SVGA75	800 x 600	46.88	75.00	1024 x 768	
SVGA85	800 x 600	53.67	85.06	1024 x 768	
XGA60	1024 x 768	48.36	60.00	1024 x 768	
XGA70	1024 x 768	56.48	70.07	1024 x 768	
XGA75	1024 x 768	60.02	75.03	1024 x 768	
XGA85	1024 x 768	68.68	85.00	1024 x 768	
SXGA70a	1152 x 864	63.85	70.01	1024 x 768	
SXGA75a	1152 x 864	67.50	75.00	1024 x 768	
WXGA60	1280 x 768	47.77	59.87	1024 x 614	*1
WXGA60a	1280 x 800	49.70	59.81	1024 x 640	*1
WXGA60b	1360 x 768	47.71	60.01	1024 x 578	*1
WXGA60c	1366 x 768	47.50	59.75	1024 x 575	*1 *2
SXGA60b	1280 x 960	60.00	60.00	1024 x 768	
SXGA60	1280 x 1024	63.98	60.02	960 x 768	
MAC13	640 x 480	35.00	66.67	1024 x 768	
MAC16	832 x 624	49.72	74.55	1024 x 768	
MAC19	1024 x 768	60.24	75.02	1016 x 768	
HP75	1024 x 768	62.94	74.92	1024 x 768	
SUN66a	1152 x 900	61.85	66.00	984 x 768	
SUN76a	1152 x 900	71.81	76.64	984 x 768	

*1 When you input the signals WXGA60, WXGA60a, WXGA60b, or WXGA60c, select the supported image size from WXGA of the FEATURE menu.
*2 The partial enlargement feature is not supported.

Important:

- Some computers aren't compatible with the projector.
- The projector's maximum resolution is 1024 x 768 pixels. It may not display images of higher resolutions than 1024 x 768 correctly.
- Images with SYNC on G (Green) signal may jitter.
- Images with SYNC on G (Green) signal may be tinged with green.
- If the resolution and frequency of your computer aren't shown on the table, find the compatible resolution and frequency by changing the resolution of your computer.
- Set COMPUTER INPUT in the SIGNAL menu to RGB when inputting the HDTV signal as RGB signal.
- TV60 and TV50 are equivalent to 480i and 576i respectively. When these signals are supplied to the VIDEO or S-VIDEO signal, the signal mode is indicated as TV60 or TV50. When they are supplied to the COMPONENT terminal, the signal mode is indicated as 480i or 576i.

Mitsubishi Projector Warranty, Sales Support and Service Information

North America

MDEA (Mitsubishi Digital Electronics America, Inc.)
Presentation Products Division
9351 Jeronimo Road Irvine CA 92618, USA
For Warranty Registration, visit:
http://www.mitsubishi-presentations.com under Customer Care
Sales & Inquiries
Phone :Toll Free (888)307-0349
E-mail :ppdinfo@mdea.com
Technical Inquiries
Phone :Toll Free (888)307-0309
E-mail :TSUPPORT@mdea.com

MESCA (Mitsubishi Electric Sales Canada Inc.)
http://www.mitsubishielectric.ca
Information Technologies Group, 4299 14th Avenue,
Markham, Ontario L3R 0J2, Canada
Sales & Technical Inquiries
Phone :+1-(800) 450-6487
Fax :+1-(905) 475-7958
E-mail :projectors@mitsubishielectric.ca
Customer Care
E-mail :support@mitsubishielectric.ca

Europe

MEU-FRA (Mitsubishi Electric Europe B.V French Branch)
25, Boulevard des Bouvets 92 741, Nanterre CEDEX,
France
Sales Inquiries
Phone :+33 (0)1 55-68-55-53
Fax :+33 (0)1 55-68-57-31
Technical Inquiries
Phone :+33 (0)1 55-68-56-42
Fax :+33 (0)1 55-68-57-31

MEU-GER (Mitsubishi Electric Europe B.V. German Branch)
http://www.mitsubishi-evs.de/
Gothaer Strasse 8, 40880 Ratingen, Germany
Sales Inquiries
Phone :0049 - 2102 - 486 9250
Fax :0049 - 2102 - 486 7320
Technical Inquiries
Phone :0049 - 2102 - 486 1330
Fax :0049 - 2102 - 486 1340

MEU-IR (Mitsubishi Electric Europe B.V. Irish Branch)
http://www.mitsubishi.ie/
Westgate Business Park, Ballymount, Dublin 24, Ireland
Sales Inquiries
Phone :+353-1-4198807
Fax :+353-1-4198890
Technical Inquiries
Phone :+353-1-4198808
Fax :+353-1-4198895

MEU-IT (Mitsubishi Electric Europe B.V. Italian Branch)
Centro Direzionale Colleoni, Palazzo Sirio, Viale Colleoni 7,
20041 Agrate Brianza, Italy
Sales & Technical Inquiries
Phone :+39-(0)39-60531
Fax :+39-(0)39-6053214
E-mail :info.projector@it.mee.com

MEU-NL (Mitsubishi Electric Europe B.V. Benelux Branch)
http://www.mitsubishi.nl/LCD/ProdFrame.html
Nijverheidsweg 23A, 3641 RP Mijdrecht, The Netherlands
Sales Inquiries
Phone :+31-297-282461
Fax :+31-297-283936
E-mail :info@mitsubishi.nl
Technical Inquiries
Phone :+31-297-282461
Fax :+31-297-283936
E-mail :info@mitsubishi.nl

Russia (Mitsubishi Electric Europe B.V Moscow
Representative Office)
http://www.mitsubishi-projector.ru/
Moscow Representative Office, 52/5 Kosmodamianskaya
Nab., 115054, Moscow, Russia
Sales & Technical Inquiries
Phone :(7095) 721-2068
Fax :(7095) 721-2071

MEU-SP (Mitsubishi Electric Europe B.V. Spanish Branch)
http://www.mitsubishielectric.es/
Ctra. de Rubi, 76-80, 08173 Sant Cugat del Valles,
Barcelona, Spain
Sales Inquiries
Phone :+34-93.565.31.54
Fax :+34-93.589.43.88
E-mail :mitsubishi.profesional@sp.mee.com
Technical Inquiries
Phone :+34-93.586.27.51
Fax :+34-93.588.53.87
E-mail :mitsubishi.profesional@sp.mee.com

MEU-SWE (Mitsubishi Electric Europe B.V Scandinavian
Branch)
Hammarbacken 14, Box 750, S-19127, Sollentuna, Sweden
Sales Inquiries
Phone :+46-(0)8-6251070
Fax :+46-(0)8-6251036
Technical Inquiries
Phone :+46-(0)8-6251052
Fax :+46-(0)8-6251036

MEU-UK (Mitsubishi Electric Europe)
http://www.mitsubishi.co.uk/evs/
Visual Information Systems Division, Travellers Lane,
Hatfield, Hertfordshire, AL10 8XB U.K.
Sales Inquiries
Phone :+44 (1707) 278684
Fax :+44 (1707) 278541
E-mail :projector.info@meuk.mee.com
Technical Inquiries
Phone :+44 (870) 606 5008
Fax :+44 (1506) 431927
E-mail :projector.info@meuk.mee.com

Asia

CHINA (Mitsubishi Electric Air-Conditioning & Visual
Information Systems (Shanghai) Ltd.)
12/F., Hong Kong New World Tower, 300 Huaihai Middle
Road, Shanghai, 200021, China
Sales Inquiries
Phone :+86(21) 6335-3030 (Ext.3007)
Fax :+86(21) 6335-3600
Technical Inquiries
Phone :+86(21) 6335-3030 (Ext.3021)
Fax :+86(21) 6335-3600

HONG KONG (Mitsubishi Electric Ryoden Air-Conditioning
& Visual Information Systems (HongKong) Ltd.)
7th Floor, Manulife Tower, 169 Electric Road, North Point,
Hong Kong
Sales Inquiries
Phone :+852-2510-1505
Fax :+852-2510-0463
Technical Inquiries
Phone :+852-2422-0161
Fax :+852-2487-0181

SINGAPORE (Mitsubishi Electric Asia Pte. Ltd.)
http://www.mitsubishielectric.com.sg
307, Alexandra Road, #05-01/02 Mitsubishi Electric
Building, Singapore 159943
Sales Inquiries
Phone :+65-6473-2308
Fax :+65-6475-9503
E-mail :Peripherals@asia.meap.com
Technical Inquiries
Phone :+65-6470-2666
Fax :+65-6475-9503

INDIA (Mitsubishi Electric Asia Pte. Ltd.)
307, Alexandra Road, #05-01/02 Mitsubishi Electric
Building, Singapore 159943
Sales Inquiries
Phone :+65-6473-2308
Fax :+65-6475-9503
E-mail :Peripherals@asia.meap.com
Technical Inquiries
Phone :+65-6470-2666
Fax :+65-6475-9503

INDONESIA (Mitsubishi Electric Asia Pte. Ltd.)
307, Alexandra Road, #05-01/02 Mitsubishi Electric
Building, Singapore 159943
Sales Inquiries
Phone :+65-6473-2308
Fax :+65-6475-9503
E-mail :Peripherals@asia.meap.com
Technical Inquiries
Phone :+65-6470-2666
Fax :+65-6475-9503

PHILIPPINES (Mitsubishi Electric Asia Pte. Ltd.)
http://www.mitsubishielectric.com.sg
307, Alexandra Road, #05-01/02 Mitsubishi Electric
Building, Singapore 159943
Sales Inquiries
Phone :+65-6473-2308
Fax :+65-6475-9503
E-mail :Peripherals@asia.meap.com
Technical Inquiries
Phone :+65-6470-2666
Fax :+65-6475-9503

VIETNAM (Mitsubishi Electric Asia Pte. Ltd.)
307, Alexandra Road, #05-01/02 Mitsubishi Electric
Building, Singapore 159943
Sales Inquiries
Phone :+65-6473-2308
Fax :+65-6475-9503
E-mail :Peripherals@asia.meap.com
Technical Inquiries
Phone :+65-6470-2666
Fax :+65-6475-9503

STC (Setsuyo Astec Corporation Seoul Branch)
16F KT Bldg., 28-2 Yeouido-dong, Yeoungdeungpo-gu,
Seoul 150-931, Korea
Sales & Technical Inquiries
Phone :+82-1588-5576
Fax :+82-2-704-8666

MALAYSIA (Melco Sales Malaysia Sdn Bhd)
Lot 11, Jalan 219, 46100 Petaling Jaya, Selangor Darul Ehsan,
Malaysia.
Sales & Technical Inquiries
Phone : +60-(0)3-79573428
Fax : +60-(0)3-79563950/+60-(0)3-79582576
Technical & Service Inquiries
Phone : +60-(0)3-79553997
Fax : +60-(0)3-79584836

ME-TWN (Mitsubishi Electric Taiwan Co., Ltd.)
http://www.MitsubishiElectric.com.tw
11TH FL., 90 SEC. 6, CHUNG SHAN N. RD., TAIPEI, 111
R.O.C.
Sales & Technical Inquiries
Phone :+886-2-2832-8255
Fax :+886-2-2833-9813

MKY (Mitsubishi Electric Kang Yong Watana Co., Ltd.)
http://www.mitsubishi-kyw.co.th/
Road, Huamark Bangkapi, Bangkok 10240, Thailand
Sales & Technical Inquiries
Phone :+66-2-731-6841
Fax :+66-2-379-4763

Oceania

ME-AUST (Mitsubishi Electric Australia)
http://www.mitsubishi-electric.com.au/prod.asp?prod=proj
348 Victoria Road, Rydalmere, N.S.W. 2116, Australia
Sales & Technical Inquiries
Phone :+(612)9684-7777
Fax :+(612)9684-7208
E-mail :diamonddigital@meaust.meap.com
Technical Inquiries
Phone :+(612)9684-7694
Fax :+(612)9684-7684
E-mail :service@meaust.meap.com

BDT (Black Diamond Technologies Ltd.)
(Warranty Registration) http://www.bdt.co.nz/projectors/
warranty.asp
1 Parliament St, Lower Hutt, Wellington, New Zealand
Sales Inquiries
Phone :+64-(0)4-560-9100
Fax :+64-(0)4-560-9133
E-mail :projectorsales@bdt.co.nz
Technical Inquiries
Phone :+64-(0)4-560-9100
Fax :+64-(0)4-560-9133
E-mail :service@bdt.co.nz

MITSUBISHI ELECTRIC CORPORATION
1 Zusho Baba, Nagaokakyo-City, Kyoto Japan

Ver.1