myprojectorlamps.com

The most trusted, dependable name in projector lamp sales.

http://www.myprojectorlamps.com

http://www.myprojectorlamps.ca

http://www.myprojectorlamps.eu

The following projector manual has not been modified or altered in any way.

MITSUBISHI ELECTRIC
DIGITAL TELEVISIONS™

Owner's Guide

Projection Television Models
WT-42315, WS-48315, WS-55315, WS-65315 and WS-65315A

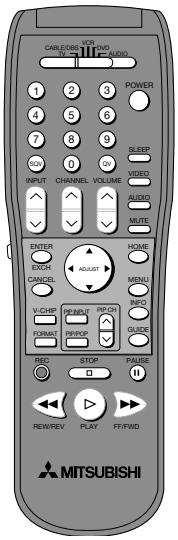

visit our website at
www.mitsubishi-tv.com

CAUTION

RISK OF ELECTRIC SHOCK DO NOT OPEN

CAUTION:

TO REDUCE THE RISK OF ELECTRIC SHOCK, DO NOT REMOVE COVER OR BACK.
NO USER SERVICEABLE PARTS INSIDE.
REFER SERVICING TO QUALIFIED SERVICE PERSONNEL.

The lightning flash with arrowhead symbol within an equilateral triangle is intended to alert the user of the presence of uninsulated "dangerous voltage" within the product's enclosure that may be sufficient magnitude to constitute a risk of electric shock.

The exclamation point within an equilateral triangle is intended to alert the user to the presence of important operating and maintenance (service) instructions in the literature accompanying the appliance.

Warning: To avoid permanently imprinting a fixed image onto your TV screen, please do not display the same stationary images on the screen for more than 15% of your total TV viewing in one week. Examples of stationary images are letterbox top/bottom bars from DVDs or other video sources, side bars when showing standard TV pictures on widescreen TV's, stock market reports, video game patterns, black or bright Closed Caption backgrounds, station logos, web sites or stationary computer images. Such patterns can unevenly age the picture tubes causing permanent damage to the TV. Please see page 6, 12 or 30 for a detailed explanation.

Note: This equipment has been tested and found to comply with the limits for a Class B digital device, pursuant to part 15 of the FCC Rules. These limits are designed to provide reasonable protection against harmful interference in a residential installation. This equipment generates, uses and can radiate radio frequency energy and, if not installed and used in accordance with the instructions, may cause harmful interference to radio communications. However, there is no guarantee that interference will not occur in a particular installation. If this equipment does cause harmful interference to radio or television reception, which can be determined by turning the equipment off and on, the user is encouraged to try to correct the interference by one or more of the following measures:

- Reorient or relocate the receiving antenna.
- Increase the separation between the equipment and the receiver.
- Connect the equipment into an outlet on a circuit different from that to which the receiver is connected.
- Consult the dealer or an experienced radio/TV technician for help.

CAUTION: To assure continued FCC compliance, the user must use a shielded video interface cable with bonded ferrite cores at both ends, when using the MonitorLink/DVI input.

Changes or modifications not expressly approved by Mitsubishi could void the user's authority to operate this equipment.

This TV is very heavy! Exercise extreme care when moving TV as foreign material may become embedded in the castor wheels which could damage wood or other delicate flooring.

WARNING:
TO REDUCE THE RISK OF FIRE OR ELECTRIC SHOCK, DO NOT EXPOSE THIS APPLIANCE TO RAIN OR MOISTURE.

CAUTION:
TO PREVENT ELECTRIC SHOCK, MATCH WIDE BLADE OF PLUG TO WIDE SLOT, FULLY INSERT.

NOTE TO CATV SYSTEM INSTALLER:
THIS REMINDER IS PROVIDED TO CALL THE CATV SYSTEM INSTALLER'S ATTENTION TO ARTICLE 820-40 OF THE NEC THAT PROVIDES GUIDELINES FOR THE PROPER GROUNDING AND, IN PARTICULAR, SPECIFIES THAT THE CABLE GROUND SHALL BE CONNECTED TO THE GROUNDING SYSTEM OF THE BUILDING, AS CLOSE TO THE POINT OF CABLE ENTRY AS PRACTICAL.

Contents

Important Notes 6

Chapter 1 Television Overview

Thank you 8
Unpacking your New TV 9
Special Features 9
Front Control Panel 10
Back Panel Input/Output 11
Important Notes 12

Chapter 2 Connections

Connecting an Antenna or Wall Outlet Cable 14
Connecting an Antenna to a Cable Box or VCR 15
Connecting an Antenna to a Cable Box and VCR 16
Connecting Audio/Video to the Cable Box or VCR 16
Connecting an Audio Receiver 17
Connecting a DVD Player or Other S-Video Device 18
Connecting a DTV Receiver 19
Connecting MonitorLink™/DVI 21
How Connections Affect the PIP and POP 22

Chapter 3 Remote Control Functions

Overview of the TV Layer Buttons 24
Care and Operation 25
Channel Selection 26
Sleep Timer 26
Use With Other A/V Products 27
Special Functions 29
Operation of PIP and POP 29
Important Notes 30

Chapter 4 Menu Screen Operations

The ViewPoint® Menu System 32
MAIN Menu 33
SETUP Menu 35
CAPTIONS Menu 40
CHANNEL EDIT Menu 42
V-CHIP LOCK Menu 45
ADVANCED FEATURES Menu 50
AUDIO/VIDEO SETTINGS Menu 55

Chapter 5 PIP/POP Operations

Operation of PIP and POP 60
Available On-Screen Format Sizes 61
Appendix A: Bypassing the V-Chip Lock 63
Appendix B: HD Input Connection Compatibility 65
Appendix C: Remote Control Programming Codes 66
Appendix D: Cleaning and Service 68
Appendix E: Diamond Shield™ Installation and Removal 69
Index 72
Troubleshooting 74
Warranty 75

IMPORTANT SAFEGUARDS

Please read the following safeguards for your TV and retain for future reference.
Always follow all warnings and instructions marked on the television.

1. Read, Retain and Follow All Instructions

Read all safety and operating instructions before operating the TV. Retain the safety and operating instructions for future reference. Follow all operating and use instructions.

2. Heed Warnings

Adhere to all warnings on the appliance and in the operating instructions.

3. Cleaning

Unplug the TV from the wall outlet before cleaning. Do not use liquid, abrasive, or aerosol cleaners. Cleaners can permanently damage the cabinet and screen. Use a lightly dampened cloth for cleaning.

4. Attachments and Equipment

Never add any attachments and/or equipment without approval of the manufacturer as such additions may result in the risk of fire, electric shock or other personal injury.

5. Water and Moisture

Do not use the TV where contact with or immersion in water is possible. Do not use near bath tubs, wash bowls, kitchen sinks, laundry tubs, swimming pools, etc.

6. Accessories

Do not place the TV on an unstable cart, stand, tripod, or table. The TV may fall, causing serious injury to a child or adult and serious damage to the TV. Use only with a cart, stand, tripod, bracket, or table recommended by the manufacturer, or sold with the TV. Any mounting of the TV should follow the manufacturer's instructions, and should use mounting accessories recommended by the manufacturer.

An appliance and cart combination should be moved with care. Quick stops, excessive force, and uneven surfaces may cause the appliance and cart combination to overturn.

7. Ventilation

Slots and openings in the cabinet are provided for ventilation and to ensure reliable operation of the TV and to protect it from overheating. Do not block these openings or allow them to be obstructed by placing the TV on a bed, sofa, rug, or other similar surface. Nor should it be placed over a radiator or heat register. If the TV is to be placed in a rack or bookcase, ensure that there is adequate ventilation and that the manufacturer's instructions have been adhered to.

8. Power Source

This TV should be operated only from the type of power source indicated on the marking label. If you are not sure of the type of power supplied to your home, consult your appliance dealer or local power company.

9. Grounding or Polarization

This TV is equipped with a polarized alternating current line plug having one blade wider than the other. This plug will fit into the power outlet only one way. If you are unable to insert the plug fully into the outlet, try reversing the plug. If the plug should still fail to fit, contact your electrician to replace your obsolete outlet. Do not defeat the safety purpose of the polarized plug.

10. Power-Cord Protection

Power-supply cords should be routed so that they are not likely to be walked on or pinched by items placed upon or against them, paying particular attention to cords at plugs, convenience receptacles, and the point where they exit from the TV.

11. Lightning

For added protection for this TV during a lightning storm, or when it is left unattended and unused for long periods of time, unplug it from the wall outlet and disconnect the antenna or cable system. This will prevent damage to the TV due to lightning and power-line surges.

IMPORTANT SAFEGUARDS, continued

12. Power Lines

An outside antenna system should not be located in the vicinity of overhead power lines or other electric light or power circuits, or where it can fall into such power lines or circuits. When installing an outside antenna system, extreme care should be taken to keep from touching such power lines or circuits as contact with them might be fatal.

13. Overloading

Do not overload wall outlets and extension cords as this can result in a risk of fire or electric shock.

14. Object and Liquid Entry

Never push objects of any kind into this TV through openings as they may touch dangerous voltage points or short-out parts that could result in fire or electric shock. Never spill liquid of any kind on or into the TV.

15. Outdoor Antenna Grounding

If an outside antenna or cable system is connected to the TV, be sure the antenna or cable system is grounded so as to provide some protection against voltage surges and built-up static charges.

Section 810 of the National Electric Code, ANSI/NFPA No. 70-1984, provides information with respect to proper grounding of the mast and supporting structure, grounding of the lead in wire to an antenna discharge unit, size of grounding conductors, location of antenna discharge unit, connection to grounding electrodes, and requirements for the grounding electrode.

EXAMPLE OF ANTENNA GROUNDING

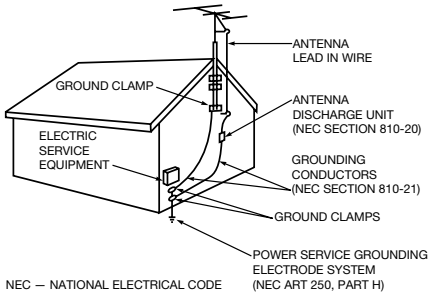

16. Servicing

Do not attempt to service this TV yourself as opening or removing covers may expose you to dangerous voltage or other hazards. Refer all servicing to qualified service personnel.

17. Damage Requiring Service

Unplug the TV from the wall outlet and refer servicing to qualified service personnel under the following conditions:

(a) When the power-supply cord or plug is damaged.

(b) If liquid has been spilled, or objects have fallen into the TV.

(c) If the TV has been exposed to rain or water.

(d) If the TV does not operate normally by following the operating instructions, adjust only those controls that are covered by the operating instructions as an improper adjustment of other controls may result in damage and will often require extensive work by a qualified technician to restore the TV to its normal operation.

(e) If the TV has been dropped or the cabinet has been damaged.

(f) When the TV exhibits a distinct change in performance - this indicates a need for service.

18. Replacement Parts

When replacement parts are required, be sure the service technician has used replacement parts specified by the manufacturer or have the same characteristics as the original part. Unauthorized substitutions may result in fire, electric shock or other hazards.

19. Safety Check

Upon completion of any service or repair to the TV, ask the service technician to perform safety checks to determine that the TV is in safe operating condition.

20. Heat

The product should be situated away from heat sources such as radiators, heat registers, stoves, or other products (including amplifiers) that produce heat.

IMPORTANT NOTES

Warning: Do not leave stationary PIP/POP, or letterbox images on the screen for extended periods of time. Mix the types of pictures shown. Uneven picture tube aging is NOT covered by your warranty.

The normal use of a TV should include a mixture of TV picture types. The most frequently used picture types should fill the screen with constantly moving images rather than stationary images or patterns.

Displaying the same stationary patterns over extended periods of time or displaying the same stationary pattern frequently can leave subtle but permanent ghost images. To avoid this, mix your viewing pattern and reduce the initial contrast level. Do not show the same stationary image for more than 15% of your total TV viewing in any given week. Display constantly moving and changing images that fill the screen whenever possible.

This projection TV uses picture tubes to project the image to the screen. All picture tubes age with use. As they age, their light output is gradually reduced. Normal TV pictures fill the screen with constantly changing images. Under these conditions, picture tubes age at an even rate across the entire screen. This maintains a TV picture that is evenly bright over the whole screen. Stationary images or images that only partially fill the screen (leaving black or colored bars to fill the screen), when used over extended periods of time or when viewed repeatedly, can cause uneven aging of the phosphors and leave subtle ghosts from the stationary images in the picture.

Still or stationary images may be received from broadcasters, cable channels, satellite channels, DVD discs, video tapes, laser discs, on-line services, web/Internet searching devices, video games, digital TV tuner/converter boxes and karaoke machines.

Examples of these types of images can be, but are not limited to the following:

- **Letterbox top/bottom black bars:**
  Shown at the top and bottom of the TV screen when you watch a widescreen (16:9) movie on a standard (4:3) TV.

- **Side bar images**
  Solid bars shown on each side of an image when watching a standard (4:3) program on a widescreen (16:9) TV.

- **News and stock-market report bars**
  Ticker running at the bottom of the TV screen.

- **Shopping channel logos & pricing displays**
  Bright graphics that are shown constantly or repeatedly in the same location.

- **Video game patterns and scoreboards**

- **Bright station logos**
  Moving or low-contrast graphics are less likely to cause uneven aging of the picture tubes.

- **Online (Internet) websites**
  Or any other stationary or repetitive computer style images, including digital photos or computer applications/programs.

- **Closed Captioning**
  Mitsubishi recommends using a gray background rather than a black or a bright color if you frequently use closed captioning.

Chapter . . . 1

Television Overview

Thank you 8
Unpacking your New TV 9
Special Features 9
Front Control Panel 10
Back Panel Input/Output 11
Important Notes 12

Thank You for Your Purchase

Welcome to the wonderful and exciting world of digital television! We are honored that you chose Mitsubishi as your premier home entertainment partner. The development team at Mitsubishi Digital Electronics America (MDEA) understands that our customers demand and expect the very best. MDEA was founded on the core beliefs and philosophies that drive us to deliver products that implement the latest in advanced television technology.

While some televisions are destined for obsolescence in the near future, MDEA's televisions are all HD-upgradeable. This cornerstone of your home entertainment system will continue to provide unparalleled enjoyment for years to come!

Whether this is your first Mitsubishi consumer electronics product or another addition to your growing Mitsubishi system, we hope that this television will bring you many hours of enjoyment.

OUR PROMISE

We will engineer and manufacture the upgrades necessary so the HD-upgradeable television you purchased today can be made compatible with near-future advances in digital television and digital interconnectivity. Specifically, we promise that you will be able to have your television upgraded, at a reasonable cost, to include an off-air HDTV tuner, a cable TV tuner (for unscrambled programming), an IEEE 1394 (FireWire®) connection, HAVi system control, and 5C copy protection.

Unpacking Your New TV

Please take a moment to review the following list of items to ensure that you have received everything including:

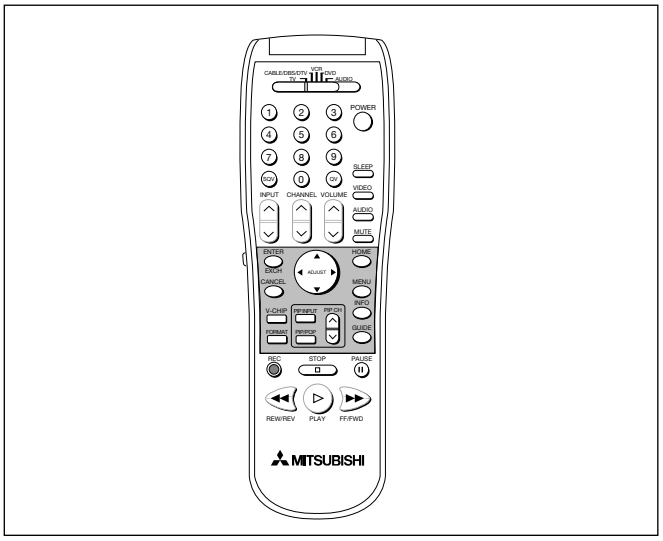

Remote Control

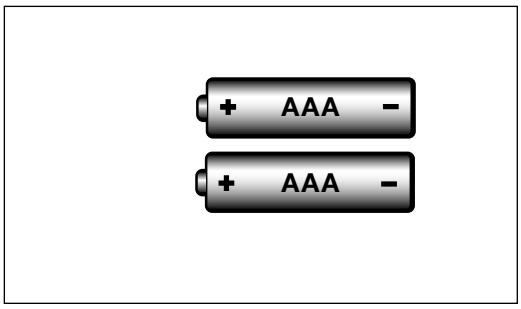

2 AAA Batteries

Product Registration Card

Quick Reference Card (not pictured)

Special Features

Your new High Definition (HD) upgradeable bigscreen television has many special features that make it the perfect addition to your home entertainment system. A few of these special features are:

PIP/POP Viewing Option

Using Picture-in-Picture and Picture-outside-Picture gives you exciting options for viewing favorite programs.

See pages 22, 29 and 62 for more information.

HD Upgradeable

With the use of an optional HDTV receiver (Mitsubishi HD-5000 or similar model), your Mitsubishi bigscreen can display high definition pictures.

See page 21 for connection information.

Multibrand Remote Control

Your Mitsubishi remote control can be programmed to control many other audio/video components.

See pages 27-28 for more information.

V-Chip Technology

Mitsubishi understands you may want to shield certain viewers from specific program content. Your Mitsubishi bigscreen will allow you to restrict programming by general contents, specific contents, or even by time.

See pages 45-49 for more information.

16:9 Widescreen TV

Enjoy a full theatrical experience in the comfort of your home. View pictures as film directors intended them. DTV, DVD and newer video game consoles support the widescreen format and are well-suited for your new TV.

See pages 60-61 for more information.

Front Control Panel

Many remote control buttons are duplicated on the front control panel. Duplicate buttons are shaded in the panels shown below. Please see Remote Control Functions, page 24, for an explanation of their usage.

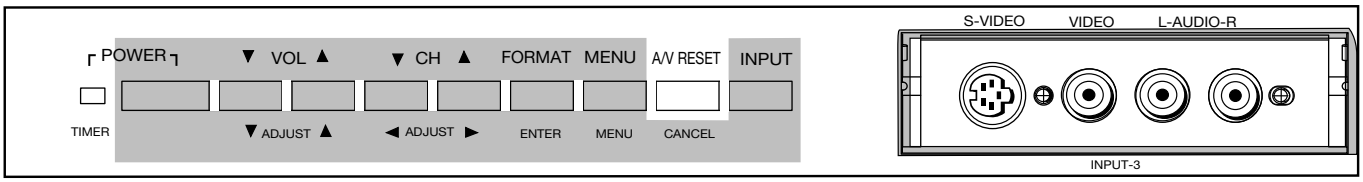

The ADJUST, ENTER, MENU, and CANCEL buttons may be used to access or navigate through the screen menus

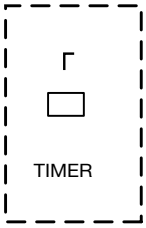

Timer

During normal operation, the timer light glows green when the TV is on. It does not glow when the TV is off. When the timer is used to turn the TV on at a specific time, the green timer light blinks while the TV is off. See Timer Menu, page 51 for timer setup instructions.

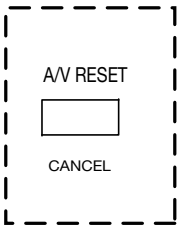

A/V Reset

Press this button to reset all A/V memory inputs to the factory default settings. See Audio/Video Settings Menu, page 55 for instructions.

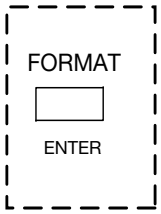

Format

Press this button to change the size and shape of the main TV picture.

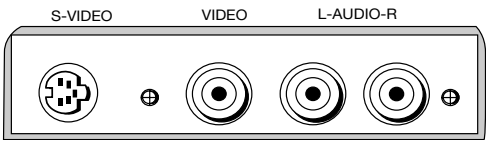

Input-3

This input can be used for convenient connection of a camcorder or other video device to the TV. You may connect to the S-VIDEO or VIDEO terminal but **not to both**.

Back Panel Input/Output for WS-48315, WS-55315, WS-65315 &WS-65315A

Side Panel Input/Output for WT-42315

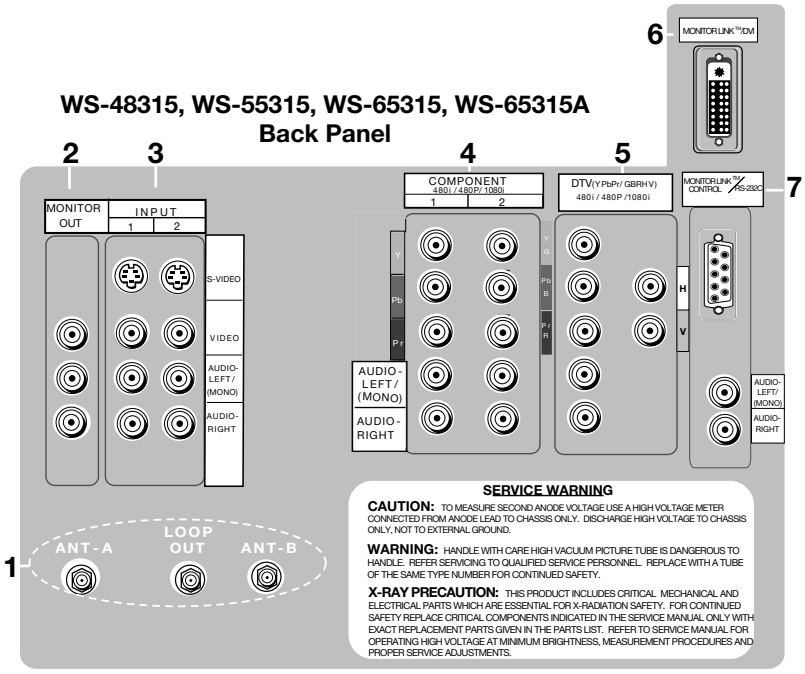

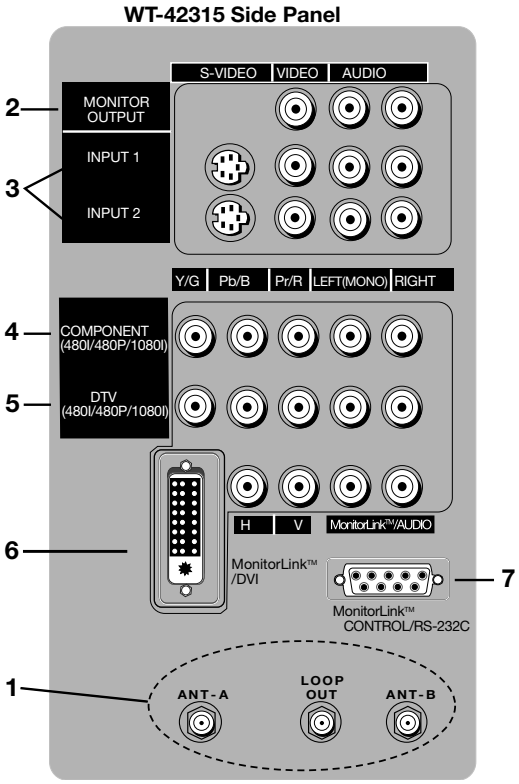

1. ANT-A, LOOP OUT and ANT-B

ANT-A and ANT-B receive signals from VHF/UHF antennas or a cable system. LOOP OUT sends the ANT-A signal out to another device, such as a cable box or VCR.

Note: LOOP OUT is disabled when Energy Mode is set to Low and the TV power is set to Off.

2. Monitor Out

The Monitor Output sends the TV audio and video signals (excluding component video, DTV video and MonitorLink) to an A/V receiver or other equipment.

3. Inputs 1-2

These inputs can be used for the connection of a VCR, Super VHS (S-VHS) VCR, laser disc player, or other A/V device to the TV. With each input, you may connect to the S-VIDEO or VIDEO terminal but not to both.

4. Component Inputs 1-2 (Component only for WT-42315)

These inputs can be used for the connection of A/V equipment with component video outputs, such as a DVD player, DTV receiver or compatible Video Game System. Please see Appendix B, page 65, for signal compatibility.

5. DTV Input

This input is used to connect a DTV receiver or cable box and can be configured for HDTV component (YPbPr), or RGB plus H&V. Please see Appendix B, page 65, for signal compatibility.

6. MonitorLink™/DVI

This is a Mitsubishi-exclusive proprietary digital interface for the display of high quality digital video signals from Mitsubishi products such as the HD-5000 HDTV Receiver/Controller. All video signals, both analog and digital are sent digitally to your Mitsubushi TV. Can also be used as a DVI (HDCP) input for other compatible sources.

Note: The DVI-HDTV input terminal is compliant with the EIA-861 standard. It is not intended for use with personal computers or devices outputting video signals with computer resolution.

7. MonitorLink™ Control/RS-232C

A digital control interface that works in parallel with MonitorLink. While MonitorLink provides the digital video signal, MonitorLink Control provides enhanced functioning such as automatic power ON/OFF and input selection. Can also be used with other compatible RS-232C external control devices. Please visit www.mitsubishi-tv.com for more details.

IMPORTANT NOTES

Warning: Do not leave stationary PIP/POP, or letterbox images on the screen for extended periods of time. Mix the types of pictures shown. Uneven picture tube aging is NOT covered by your warranty.

The normal use of a TV should include a mixture of TV picture types. The most frequently used picture types should fill the screen with constantly moving images rather than stationary images or patterns.

Displaying the same stationary patterns over extended periods of time or displaying the same stationary pattern frequently can leave subtle but permanent ghost images. To avoid this, mix your viewing pattern and reduce the initial contrast level. Do not show the same stationary image for more than 15% of your total TV viewing in any given week. Display constantly moving and changing images that fill the screen whenever possible.

This projection TV uses picture tubes to project the image to the screen. All picture tubes age with use. As they age, their light output is gradually reduced. Normal TV pictures fill the screen with constantly changing images. Under these conditions, picture tubes age at an even rate across the entire screen. This maintains a TV picture that is evenly bright over the whole screen. Stationary images or images that only partially fill the screen (leaving black or colored bars to fill the screen), when used over extended periods of time or when viewed repeatedly, can cause uneven aging of the phosphors and leave subtle ghosts from the stationary images in the picture.

Still or stationary images may be received from broadcasters, cable channels, satellite channels, DVD discs, video tapes, laser discs, on-line services, web/Internet searching devices, video games, digital TV tuner/converter boxes and karaoke machines.

Examples of these types of images can be, but are not limited to the following:

- **Letterbox top/bottom black bars**
  Shown at the top and bottom of the TV screen when you watch a widescreen (16:9) movie on a standard (4:3) TV.

- **Side bar images**
  Solid bars shown on each side of an image when watching a standard (4:3) program on a widescreen (16:9) TV.

- **News and stock-market report bars**
  Ticker running at the bottom of the TV screen.

- **Shopping channel logos & pricing displays**
  Bright graphics that are shown constantly or repeatedly in the same location.

- **Video game patterns and scoreboards**

- **Bright station logos**
  Moving or low-contrast graphics are less likely to cause uneven aging of the picture tubes.

- **Online (Internet) websites**
  Or any other stationary or repetitive computer style images, including digital photos or computer applications/programs.

- **Closed Captioning**
  Mitsubishi recommends using a gray background rather than a black or a bright color if you frequently use closed captioning.

Chapter . . . 2

Connections

Connecting an Antenna or Wall Outlet Cable 14
Connecting an Antenna to a Cable Box or VCR 15
Connecting an Antenna to a Cable Box and VCR..... 16
Connecting Audio/Video to a Cable Box or VCR..... 16
Connecting an Audio Receiver..... 17
Connecting a DVD Player or Other S-Video Device 18
Connecting a DTV Receiver..... 19
Connecting MonitorLink™/DVI..... 21
How Connections Affect the PIP and POP..... 22

IMPORTANT

Additional connection cables are not provided with the TV. They should be available at most electronic stores.

Connecting an Antenna or Wall Outlet Cable

Note: The TV back panel and connections shown here are for reference only and may vary by model.

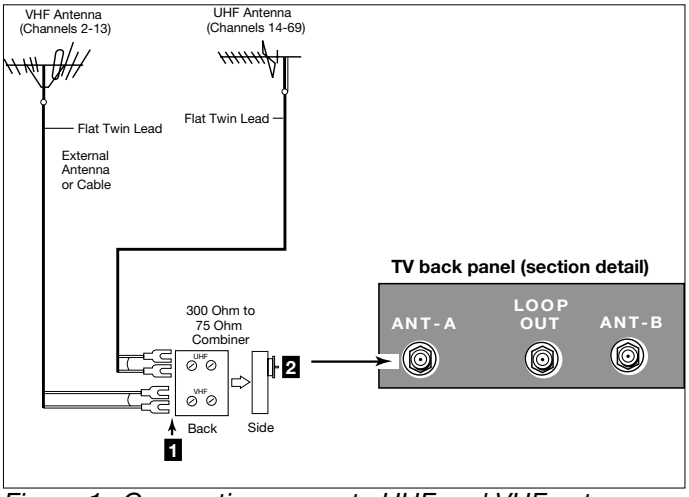

Figure 1. Connecting separate UHF and VHF antennas.

Mitsubishi strongly recommends against using antennas with twin flat leads. Twin flat lead antenna wires are subject to interference which may adversely affect the performance of the TV. We recommend using coaxial antenna cable.

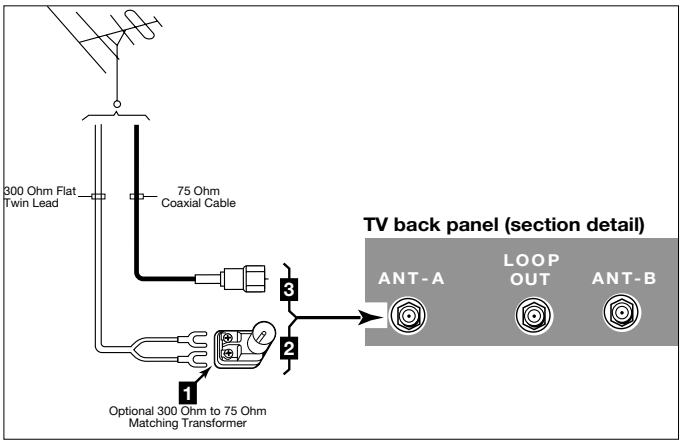

Figure 2. Connecting twin lead antenna, coaxial lead antenna, or wall outlet cable.

Separate UHF and VHF Antennas

(Figure 1)

1. Connect the UHF and VHF antenna leads to the UHF/VHF combiner.
2. Push the combiner onto ANT-A on the TV back panel.

UHF/VHF combiners are not provided with the TV. They are available at most electronic stores.

Note: This TV will only be able to provide an analog signal through ANT-A on the TV back panel.

See page 5 for Outdoor Antenna Grounding information.

Twin Lead Antenna, Coaxial Lead Antenna, or Wall Outlet Cable

(Figure 2)

For antenna with twin flat leads:

1. Connect the 300 Ohm twin leads to the transformer.
2. Push the 75 Ohm side of the transformer onto ANT-A on the TV back panel.

300 Ohm to 75 Ohm matching transformers are not provided with the TV. They are available at most electronic stores.

For cable or antenna with coaxial lead:

3. Connect the incoming cable to ANT-A on the TV back panel.

Note: This TV will only be able to provide an analog signal through ANT-A on the TV back panel.

See page 5 for Outdoor Antenna Grounding information.

IMPORTANT

Additional connection cables are not provided with the TV. They should be available at most electronic stores.

Connecting an Antenna to a Cable Box or VCR

Note: The TV back panel and connections shown here are for reference only and may vary by model.

Cable Box

(Figure 3)

1. Connect the incoming cable to ANT-A on the TV back panel.

Connect two coaxial cables as follows:

2. One from LOOP-OUT on the TV back panel to IN on the cable box back panel.
3. One from OUT on the cable box back panel to ANT-B on the TV back panel.

Note: If your cable box has separate audio/video outputs, please see Composite Video with Audio or S-Video with Audio, page 16 (Figure 6).

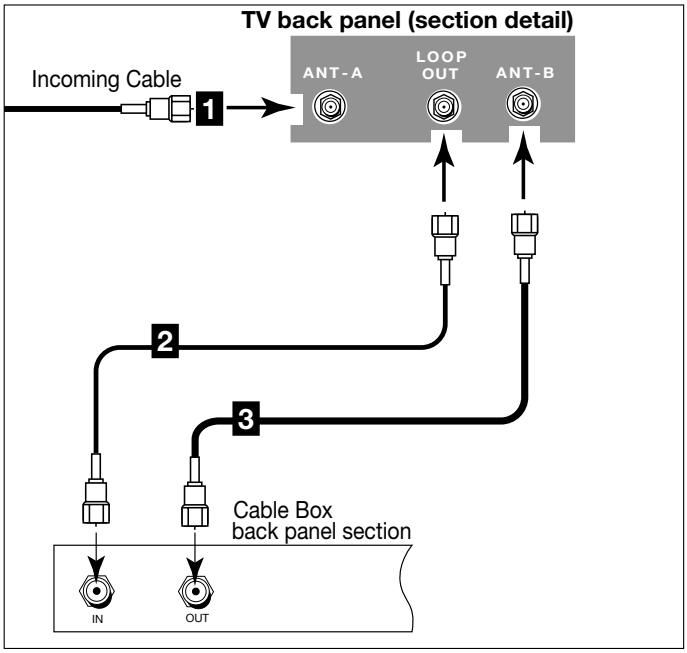

Figure 3. Connecting the cable box.

Antenna or Wall Outlet Cable

(Figure 4)

1. Connect the incoming cable to ANT-A on the TV back panel.

Connect two coaxial cables as follows:

2. One from LOOP-OUT on the TV back panel to ANTENNA IN on the VCR back panel.
3. One from VCR back panel ANTENNA OUT to ANT-B on the TV back panel.

Note: If your cable box has separate audio/video outputs, please see Composite Video with Audio or S-Video with Audio, page 16 (Figure 6).

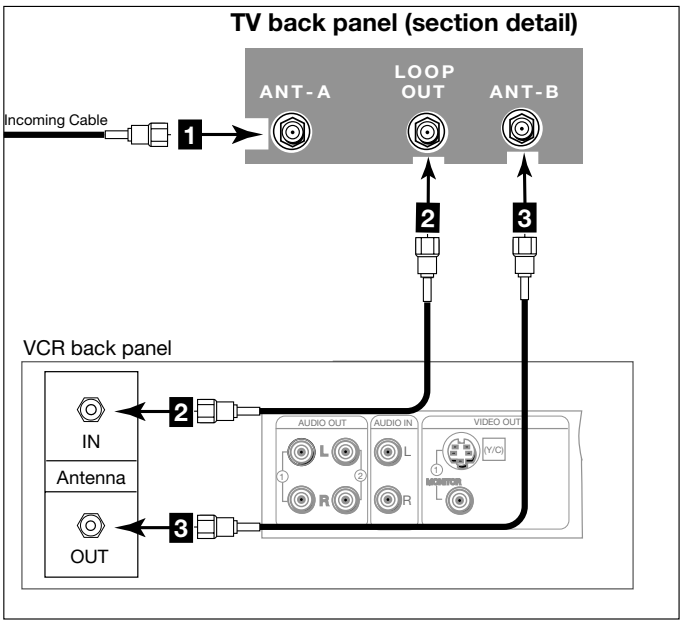

Figure 4. Connecting the VCR with antenna or wall outlet cable.

Note: For models WS-48315, WS-55315, WS-65315 and WS-65315A, when the Energy Mode is set to Low, the VCR may not record programs when the TV is off.

Note: For digital cable boxes, refer to your Digital Cable Box owner's guide for instructions on optimal connections to this TV.

Connecting an Antenna to a Cable Box and VCR, Connecting Audio/Video to the Cable Box or VCR

Note: The TV back panel and connections shown here are for reference only and may vary by model.

Contact your local cable or satellite provider or refer to the cable box or satellite Owner's Guide for instructions on optimal connections to this TV.

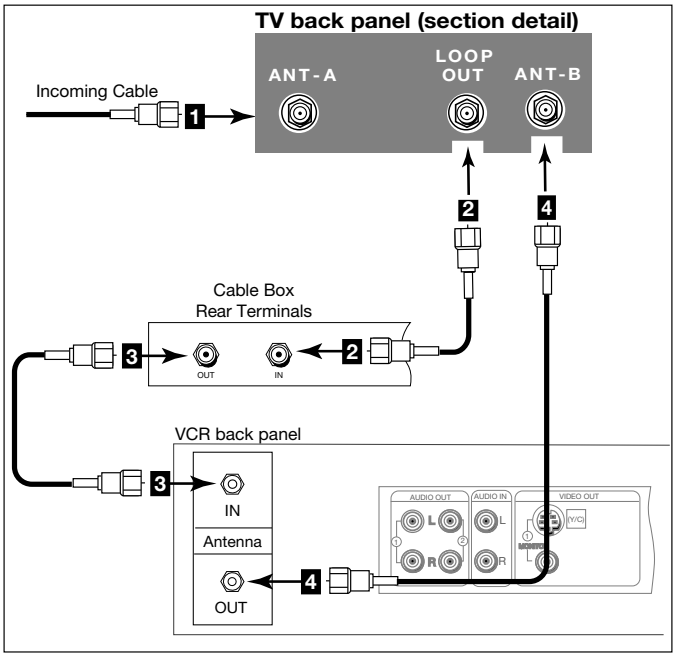

Figure 5. Connecting the VCR with cable box.

Cable Box

(Figure 5)

1. Connect the incoming cable to ANT-A on the TV back panel.

Connect three coaxial cables as follows:

2. One from LOOP-OUT on the TV back panel to IN on the back of the cable box.
3. One from OUT on the back of the cable box to ANTENNA IN on the VCR back panel.
4. One from ANTENNA OUT on the VCR back panel to ANT-B on the TV back panel.

Note: For best performance, please see Composite Video with Audio or S-Video with Audio, below.

IMPORTANT

Additional connection cables are not provided with the TV. They should be available at most electronic stores.

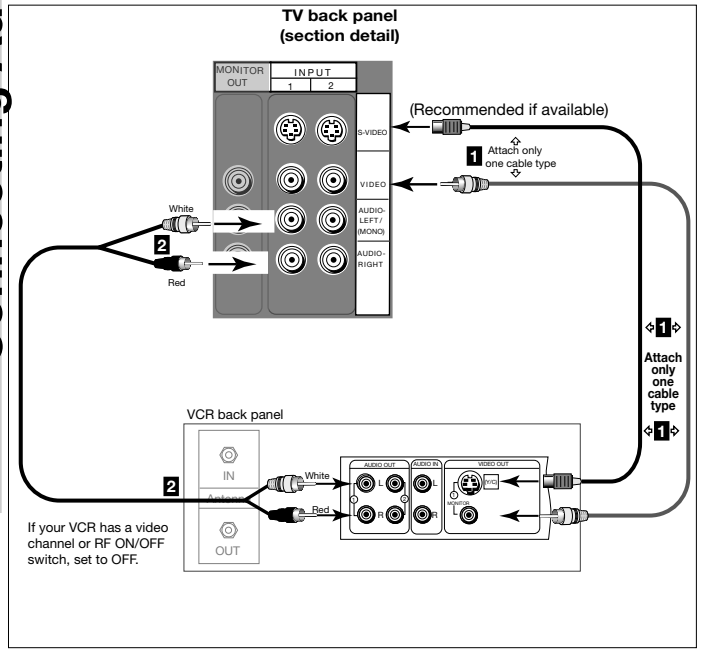

Figure 6. Connecting the VCR Audio/Video.

Composite Video with Audio or S-Video with Audio (Recommended)

(Figure 6)

1. Connect a video or an S-Video cable from VIDEO OUT on the VCR back panel to VIDEO or S-VIDEO, INPUT-1 or INPUT-2 on the TV back panel.
2. Connect a set of audio cables from AUDIO OUT on the VCR back panel to AUDIO INPUT-1 or INPUT-2 on the TV back panel, matching the input used in step 1.
   - The red cable connects to the R (right) channel
   - The white cable connects to the L (left) channel

If your VCR is mono (non-stereo), connect only the white (left) cable.

You may connect to the S-VIDEO or VIDEO terminal but <u>not to both</u>.

Connecting an Audio Receiver

Note: The TV back panel and connections shown here are for reference only and may vary by model.

Stereo Audio System

(Recommended for shelf units or A/V receivers without digital audio inputs)

(Figure 7)

1. Connect the audio cables from AUDIO MONITOR OUTPUT on the TV back panel to TV IN or AUX IN terminals on the back of the audio system.
   - The red cable connects to the R (right) channel
   - The white cable connects to the L (left) channel
2. Turn off the TV's speakers through the AUDIO/ VIDEO SETTINGS Menu, page 55.
3. Set the audio system's input to the TV or AUX position to hear the TV's audio through your stereo system.

IMPORTANT

These types of audio connections do NOT support multi-channel digital audio. Please refer to your other devices Owner's Guide to verify.

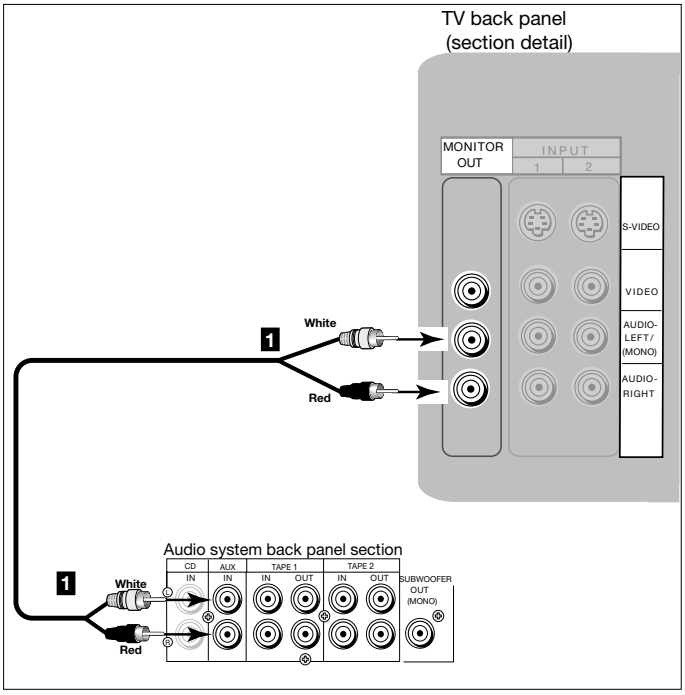

Figure 7. Connecting the Stereo Audio System.

A/V Receiver

(Figure 8)

1. Connect either a video cable or an S-Video cable (but not both) from VIDEO MONITOR OUT on the back of the A/V receiver to VIDEO INPUT-1 or INPUT-2 on the TV back panel.

Note: If the A/V receiver outputs an onscreen menu, this connection allows you to view the receiver's menu on the television.

2. Connect a video cable from VIDEO MONITOR OUTPUT on the TV back panel to VIDEO TV IN on the back of the A/V receiver.
3. Connect a set of audio cables from AUDIO MONITOR OUTPUT on the TV back panel to AUDIO TV IN on the back of the A/V receiver.
   - The red cable connects to the R (right) channel
   - The white cable connects to the L (left) channel

Note: Please see your A/V receiver Owner's Guide for more detailed connections.

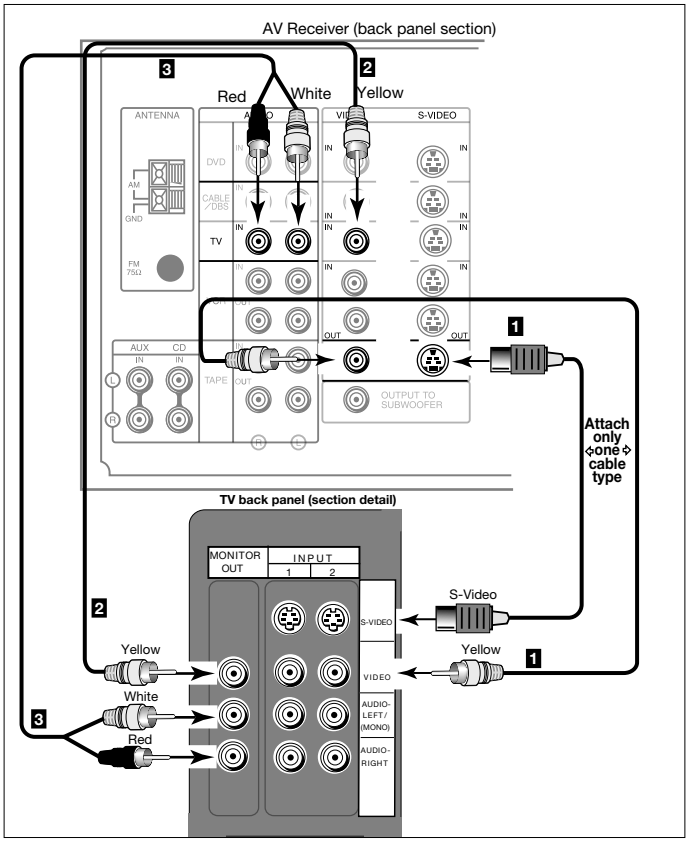

Figure 8. Connecting the A/V Receiver.

Connecting a DVD Player or Other S-Video Device

Note: The TV back panel and connections shown here are for reference only and may vary by model.

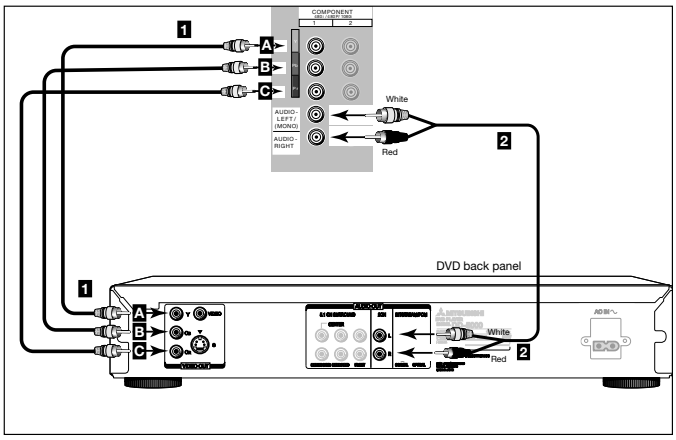

Figure 9. Connecting a DVD Player with Component Video.

DVD Player with Component Video

(Figure 9)

1. Connect the Component Video cables from (Y Cb Cr or Y Pb Pr) VIDEO OUT on the back of the DVD player to COMPONENT (1 or 2) on the TV back panel. The correct connections are:

   A. Y to Y

   B. Cb or Pb to Pb

   C. Cr or Pr to Pr

2. Connect a set of audio cables from AUDIO OUT on the back of the DVD player to COMPONENT AUDIO Input (1 or 2) on the TV back panel.

- The red cable connects to the R (right)channel
- The white cable connects to the L (left) channel

Note: Some video game systems support DTV resolutions via component connections. Please refer to your video game console Owner's Guide for setup information.

Note: For optimal DVD playback performance, Mitsubishi recommends using a progressive scan DVD player, set to play in progressive scan mode. You will also want to set your player to display 16:9 widescreen. Please refer to your DVD player's Owner's Guide.

IMPORTANT

See Appendix, page 65, for component video signal compatibility information.

For digital audio connections, see your DVD and A/V receiver Owner's Guides.

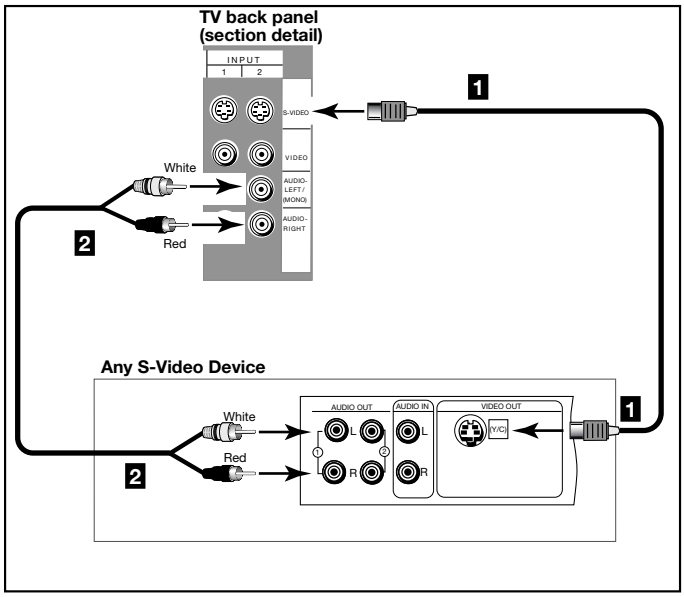

Figure 10. Connecting an S-Video Device.

Other S-Video Device

(Figure 10)

1. Connect an S-Video cable from VIDEO OUT on the device back panel to VIDEO INPUT-1 or INPUT-2 on the TV back panel.

2. Connect a set of audio cables from AUDIO OUT on the device back panel to AUDIO INPUT-1 or INPUT-2 on the TV back panel, matching the input used in step 1.

- The red cable connects to the R (right) channel
- The white cable connects to the L (left) channel

If your S-Video Device is mono (non-stereo), connect only the white (left) cable.

Connecting a DTV Receiver

Note: The TV back panel and connections shown here are for reference only and may vary by model.

Contact your local cable or satellite provider or refer to the cable box or satellite Owner's Guide for instructions on optimal connections to this TV.

DTV Connectors and Adaptors

(Figure 11)

The TV back panel has 5 RCA-type connectors for the DTV connection. The back panel of your DTV receiver may use RCA-type connectors or BNC-type connectors. If your DTV receiver comes with BNC type connections, you will need to purchase BNC to RCA adaptors to connect the TV to the DTV receiver. These adaptors should be available at most electronic supply stores.

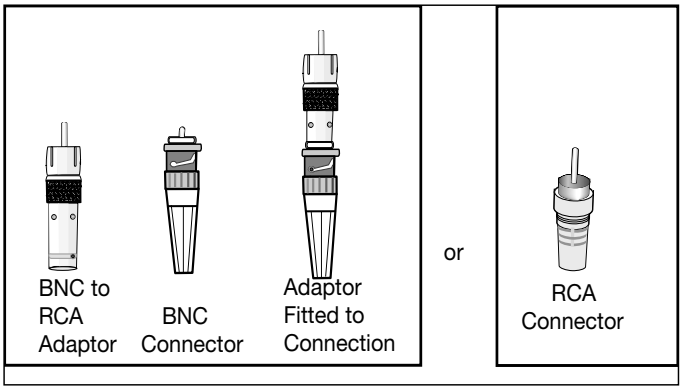

Figure 11. DTV connectors and adaptors.

IMPORTANT

See Appendix, page 65, for component video signal compatibility information.

For digital audio connections, see your DTV and A/V receiver Owner's Guides.

DTV Receiver with Component Video Connections (Recommended)

(Figure 12)

1. Connect the outside antenna cable, or satellite to ANT or SATELLITE IN on the DTV receiver (see your DTV receiver owner's guide for instructions and cable compatibility).
2. If your DTV receiver has a built-in terrestrial tuner, connect the incoming terrestrial antenna to ANT on the DTV receiver. If your DTV receiver does not have a built-in terrestrial tuner, this TV will only be able to provide an analog signal through Ant-A on the TV back panel.
3. Connect the RCA-type cables from the DTV receiver outputs to DTV INPUT Y/Pb/Pr on the TV back panel. You may need to set the DTV Input Assignment to Y/Pb/Pr (see page 35).
4. Connect the L (left) and R (right) audio cables from the DTV receiver to DTV AUDIO on the TV back panel.
5. To utilize the benefits of a digital A/V receiver, connect your DTV receiver's digital audio out to a digital input on your digital A/V receiver. Component (1 and 2) may also be used for 1080i components (Only Component 1 for WT-42315).

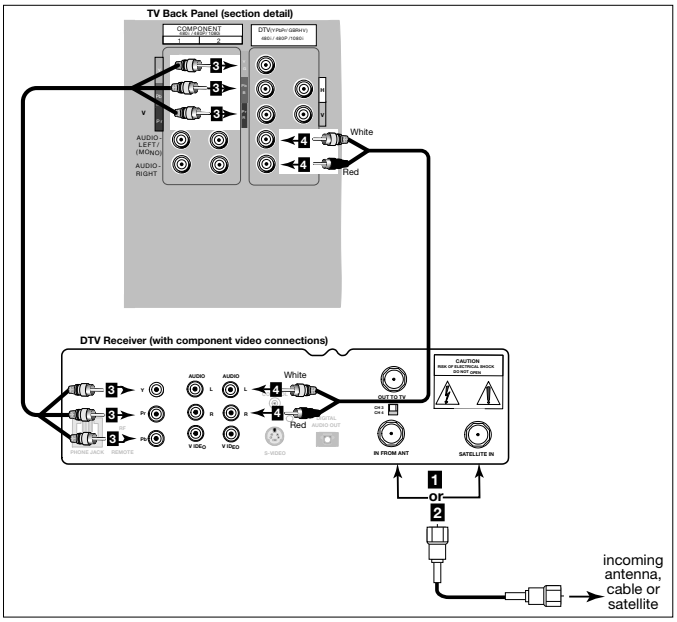

Figure 12. Connecting the DTV receiver with component Video Connections.

Connecting a DTV Receiver, continued

Note: The TV back panel and connections shown here are for reference only and may vary by model.

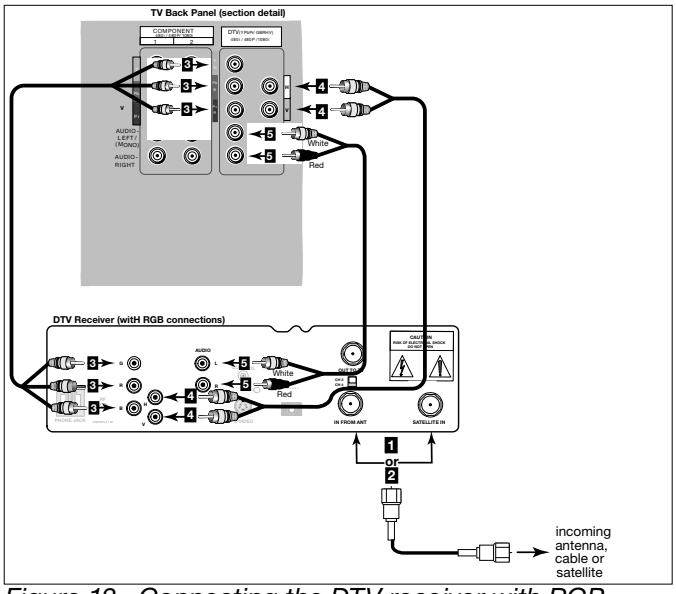

Figure 13. Connecting the DTV receiver with RGB video connections.

IMPORTANT

See Appendix, page 65, for component video signal compatibility information.

For digital audio connections, see your DTV and A/V receiver Owner's Guides.

DTV Receiver with RGB Video Connections

(Figure 13)

1. Connect the outside antenna, cable, or satellite to ANT or SATELLITE IN on the DTV receiver (see your DTV receiver owner's guide for instructions and cable compatibility).

2. If your DTV receiver has a built-in terrestrial tuner, connect the incoming terrestrial antenna to ANT on the DTV receiver. If your DTV receiver does not have a built-in terrestrial tuner, this TV will only be able to provide an analog signal through Ant-A on the TV back panel.

3. Connect the RGB cables from the DTV receiver to the TV back panel as listed below (if your DTV receiver uses BNC-type cables, use the adaptors shown in Figure 11, page 19):

DTV Receiver		TV Back Panel
G (green)	=	Y/G
B (blue)	=	Pb/B
R (red)	=	Pr/R

4. If the DTV receiver has outputs for H and V sync, connect as listed below (**DO NOT** connect if DTV receiver uses "Sync on Green"):

H (horizontal sync)	=	H
V (vertical sync)	=	V

5. Connect the L (left) and R (right) audio cables from the DTV receiver to DTV AUDIO on the TV back panel.

6. To utilize the benefits of a digital A/V receiver, connect your DTV receiver's digital audio out to a digital input on your digital A/V receiver. You may need to setup the DTV (See Input Assignment, page 35) to RGB.

Connecting MonitorLink™/DVI

MonitorLink/DVI

(Figure 14)

The Monitor Link/DVI input uses a DVI-I Dual Link connector for maximum cable flexibility. When MonitorLink is used as a DVI-HDCP input, the terminal is compliant with DVI-D Single Link signals matching EIA-861 standards for standard, extended and high definition video with scanning rates of 480p and 1080i. However, this input is not intended for use with personal computers or devices outputting video signals with computer resolutions. All other DTV video signals, such as 720p, need to be converted by the DTV receiver (or compatible device) to one of the compatible signal types. Please check the specifications on your device before connecting.

1. Connect a MonitorLink/DVI cable from the TV back panel to the Mitsubishi HD Receiver/ Controller back panel.

2. Connect the MonitorLink Control/RS-232 cable from the TV back panel to the Mitsubishi HD Receiver/Controller back panel.

3. Connect the L (left) and R (right) audio cables from the HDTV receiver to AUDIO LEFT and AUDIO RIGHT on the MonitorLink section of the TV back panel.

Note: DVI and RS-232 cables can be found at your local electronics store if they are not included with your devices.

Please refer to www.mitsubishi-tv.com for more information on RS-232C control.

CAUTION: To assure continued FCC compliance, we recommend using a shielded video interface cable with bonded ferrite cores at each end, when using the MonitorLink/DVI input.

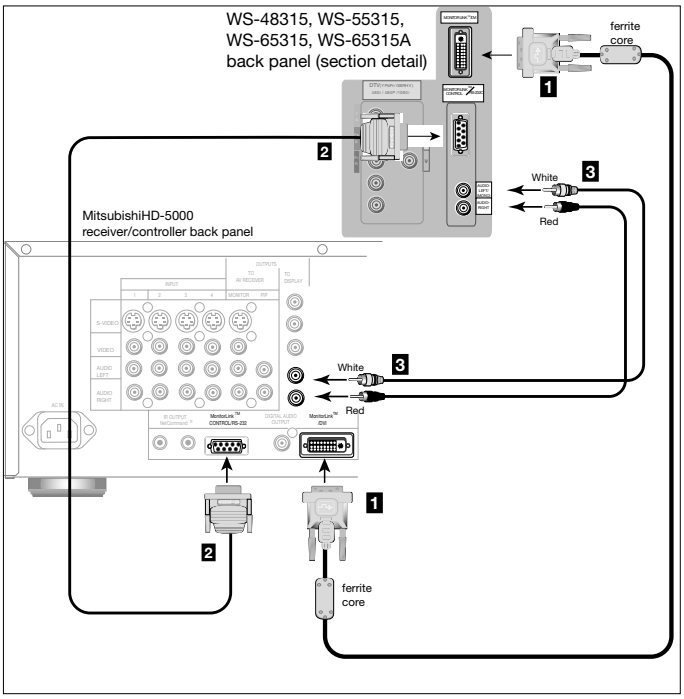

Figure 14. Connecting MonitorLink

IMPORTANT

This connection supports copy protection (HDCP). Some devices require connecting to an analog input first, in order to view on-screen menus and select DVI as the output. Please review your equipment instructions for DVI connectivity and compatibility.

How Connections Affect the PIP (Picture-In-Picture) and POP (Picture-Outside-Picture)

To see a picture in the PIP or POP, you may need to select an input source. If the only input connected is ANT-A, then both the main picture and the PIP/POP will be from that input source. If other video equipment is connected, you may be able to view these input sources as the PIP/POP. When connecting your new Mitsubishi TV, it is important to understand which main picture and PIP/POP input sources can and cannot be used together. The table on this page shows which inputs can and cannot be used together and the limitations they may have. If you press the INFO button it will display the current Input, signal (480i, 480p, or 1080i), format, time, day and sleep time.

See Operation of PIP and POP, page 62, for operating instructions.

PIP/POP / Main	Ant-A	Ant-B	DTV 480i, 480p, 1080i	Input-1 Input-2 Input-3	Component(s) (Comp. -1, -2†) 480i. 480p, 1080i
Ant-A	OK*	No PIP/POP	OK	OK	OK
Ant-B	OK	OK*	OK	OK	OK
DTV 480i, 480p, 1080i	OK	OK	OK**	OK	OK
Input-1 Input-2 Input-3	OK	OK	OK	OK**	OK
Component(s) (Comp-1, -2†) 480i, 480p, 1080i	OK	OK	OK	OK	OK**
MonLink/DVI	OK	OK	OK	OK	OK

* No Side-by-Side with the same channel

**No Side-by-Side with the same input

† Component-2 is not available on the WT-42315

Chapter . . . 3

Remote Control Functions

Overview of the TV Layer Buttons 24
Care and Operation 25
Channel Selection 26
Sleep Timer 26
Use With Other A/V Products 27
Special Functions 29
Operation of PIP and POP 29
Important Notes 30

Overview

(Figure 1, following page,)

1. **Slide Switch:** Select A/V product to be controlled by the remote control.
2. **Numbers:** Individually select channels or input information into TV.
3. **POWER:** Turns power on and off for TV and other connected A/V products.
4. **SQV (Super Quick View™):** Scan through a memorized list of favorite channels.
5. **QV (Quick View™):** Switch to last channel viewed.
6. **SLEEP:** Set the TV to turn off within 2 hours. See Sleep Timer, page 26, for setup instructions.
7. **INPUT:** Select the signal to view; Ant-A, Ant-B, DTV, Component-1, Component-2, Input-1, Input-2, Input-3 or MonLink (Component-2 not available on WT-42315).
8. **CHANNEL:** Scroll up or down through memorized channels. Skips DVD chapters in DVD layer.
9. **VOLUME:** Change sound level.
10. **VIDEO:** Select the individual video settings.
11. **AUDIO:** Select the individual audio settings.
12. **MUTE:** Turn sound on or off.
13. **ENTER/EXCH:** Select a channel number or menu item. Exchange PIP or POP with the main TV picture.
14. **ADJUST:** Navigate menus, change settings, and move the PIP on-screen location.
15. **HOME:** Exit on-screen menus and return to TV viewing.
16. **CANCEL:** Clear SQV and some menu entries. Used as a subchannel button in Cable/DBS/DTV layer.
17. **MENU:** Display ViewPoint® on-screen menu system.
18. **V-CHIP:** Displays V-Chip Passcode screen, use to enable or disable the V-Chip Lock.
19. **PIP INPUT:** Select the PIP or POP input source.
20. **PIP CH:** Scroll up or down through memorized channels in PIP or POP.
21. **INFO:** Displays on-screen summary of the current input used and any broadcast information available (including current V-Chip information, signal source, scan rate and format). Additionally, if you press the INFO key, it will display time, day and sleep time.
22. **FORMAT:** Change the shape and size of the main TV picture.
23. **PIP/POP:** Cycle through PIP and POP display choices.
24. **GUIDE:** When the slide switch is set to CABLE/DBS/DTV, displays the on-screen program guide (some cable boxes and DBS/DTV receivers).
25. **REC:** Manually record with your VCR or recordable DVD.
26. **STOP:** Stop your VCR, DVD, or CD.
27. **PAUSE:** Pause your VCR, DVD, AV Disc, or freeze the PIP or POP image.
28. **REW/REV:** Rewind or reverse search with your VCR, reverse scan with your DVD, or skip reverse with your CD.
29. **PLAY:** Play your VCR, DVD, or CD.
30. **FF/FWD:** Fast forward or forward search with your VCR, fast play with your DVD, or skip forward with your CD.
31. **LIGHT:** Illuminates buttons or labels on the remote control. Located on the left side of the remote.

Remote Control Functions: Care and Operation

Operation

Installing the Batteries:
(Figure 2)

1. Remove the remote control's back cover by gently pressing the ridged tab in the direction of the arrow and sliding off the cover.
2. Load the batteries, making sure the polarities (+) and (-) are correct. For ease of installation, install the negative (-) side first.

For Best Results from the Remote Control:

- Be within 20 feet of the equipment.
- Do not press two or more buttons at the same time unless instructed to.
- Do not allow to get wet or become heated.
- Avoid dropping on hard surfaces.
- Do not use harsh chemicals to clean. Use only a soft, lightly moistened cloth.
- Do not mix new and old batteries.
- Do not heat, take apart, or throw batteries into fire.
- Use only AAA batteries.

Operating the Remote Control:

You can use the remote to control the TV, CABLE/DBS/DTV, VCR, DVD, and AUDIO products. Select the product you want to control by moving the slide switch to the appropriate position. The remote control has been preset to operate the TV and other Mitsubishi products. To program the remote control to operate other products, see Use of the Remote Control with Other A/V Products, page 27.

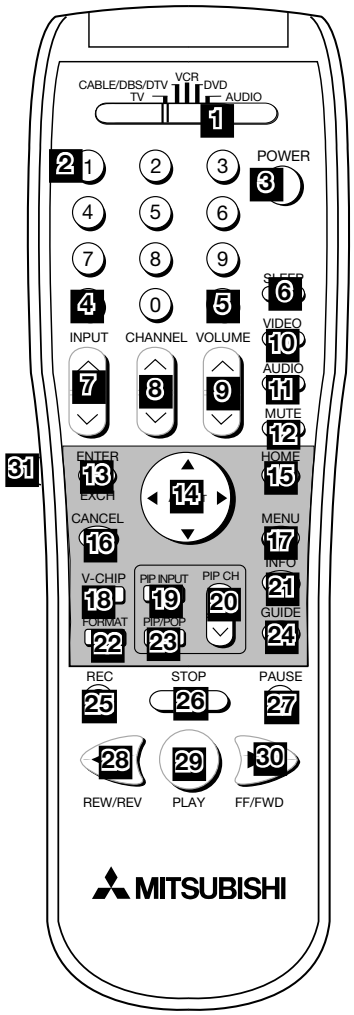

Figure 1. Remote Control Functions.

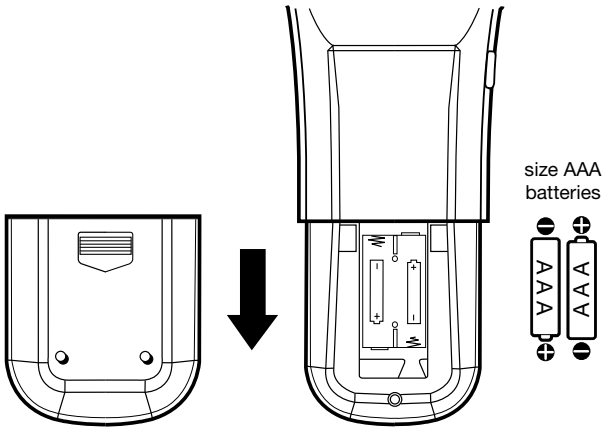

Figure 2. Installing the batteries.

IMPORTANT

The remote control may return to its initial setting when the batteries are changed. It may need to be reprogrammed.

Figure 3. Sleep button on remote control

Sleep: 30 min.

Figure 4. On-screen display for sleep timer

Channel Selection

- Enter three numbers (ex. for channel 2, press 002).

or

- Press the channel number and ENTER (ex. for channel 2, press 2, then ENTER).

or

- Enter the channel number and wait four seconds (without pressing ENTER). The TV will change automatically.

Note: Use the CANCEL button for digital subchannel (-) selection in the CABLE/DBS/DTV layer.

Sleep Timer

(Figure 3 & 4)

Setting the Sleep Timer:

- Press SLEEP on the remote control.
- A message indicating the length of time the sleep timer is to be set appears on the TV screen.
- Each press of SLEEP will increase the time displayed by 30 minutes, until the maximum value of 120 minutes is reached.
- After 5 seconds of inactivity, the message will disappear.
- Press SLEEP to view the remaining time before the timer turns the TV off.

Canceling the Sleep Timer:

- Press the SLEEP button to display the on-screen message.
- Press SLEEP repeatedly until OFF is displayed. After 5 seconds of inactivity, the message will disappear.

Use of the Remote Control with Other A/V Products

Programming the Remote Control to Use with Other Brands of Audio and Video Products:

(Figures 1-4 this page, Figure 5, following page)

1. Move the slide switch at the top of the remote to the product you want to control.
2. Press and hold the POWER button on the remote control.
3. Enter the first three digit code listed for your equipment, and then release the POWER button on the remote control.
4. Point the remote control to the equipment and press the POWER button.

Note: If the equipment responds,the remote control is properly programmed to operate the equipment. If the equipment does not respond, repeat steps 2-4 with the next three digit code listed in step 3.

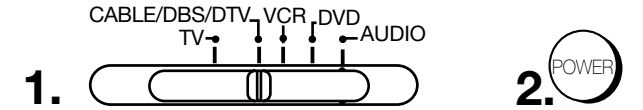

3.

Cable Box Codes

Cable box brand	Code to enter:
General Instruments/ Jerrold	119, 120, 121, 122,123, 124
Motorola	125, 126, 127
Oak	139, 137, 102
Pioneer	101, 116
Scientific Atlanta	112, 113
Zenith	117, 100

If your cable box code is not listed here, please see page 66 for a complete listing.

To reset to default code, enter 000

Figure 1. Programming the remote to control your cable box.

IMPORTANT

If you cannot turn the cable box ON by pressing POWER, try pressing CHANNEL or the number buttons.

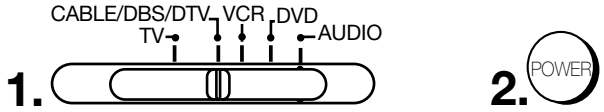

3.

Satellite Receiver Codes

Satellite brand	Code to enter:
Mitsubishi DTV - DBS	006
DishNetwork	175
Hughes - DBS	173
Panasonic - DBS	174
RCA - DBS	176
Sony - DBS	177
Toshiba-DBS	170, 173, 189, 190, 191

If your satellite receiver code is not listed here, please see page 67 for a complete listing.

To reset to default code, enter 000

Figure 2. Programming the remote to control your satellite receiver.

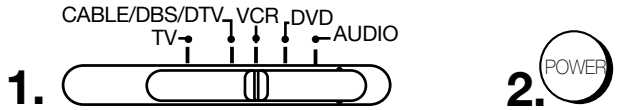

3.

VCR Codes

VCR brand	Code to enter:
Mitsubishi	001, 002
Hitachi	020, 043, 065
JVC	030, 054
Phillips / Magnavox	043, 044, 051
Panasonic	041, 042, 043
RCA	020, 053, 065
Sony	048, 049, 050
Toshiba	021

If your VCR code is not listed here, please see page 67 for a complete listing.

To reset to default code, enter 000

Figure 3. Programming the remote to control your VCR.

IMPORTANT

When set to TV, the PLAY, STOP, REW/ REV, and FF/FWD buttons will operate the VCR after the VCR codes have been properly programmed into the remote control.

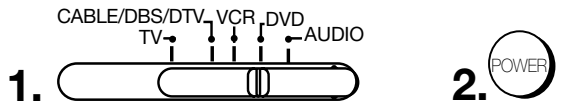

3.

DVD Player Codes

DVD/LDP brand	Code to enter:
Mitsubishi	003
JVC	257
Panasonic	250
Philips	258, 253, 272
Pioneer DVD	252
Samsung	261
Sony	254
Toshiba	253

If your DVD code is not listed here, please see page 66 for a complete listing.

To reset to default code, enter 000

Figure 4. Programming the remote to control your DVD or LDP.

Use of the Remote Control with Other A/V Products, continued

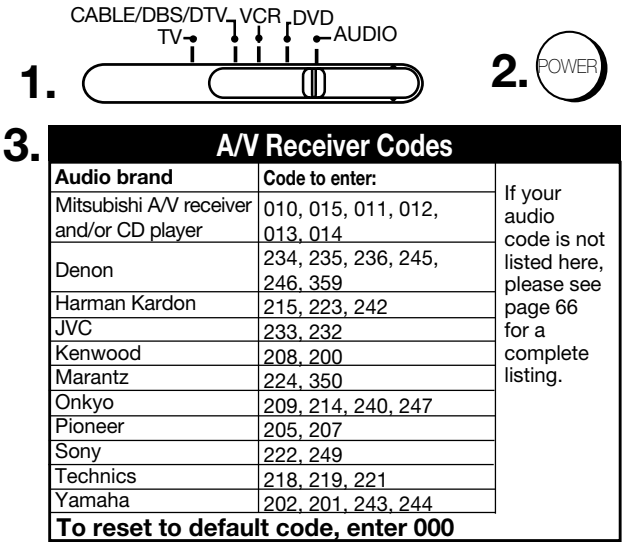

A/V Receiver Codes

Audio brand	Code to enter:	
Mitsubishi A/V receiver and/or CD player	010, 015, 011, 012, 013, 014	If your audio code is not listed here, please see page 66 for a complete listing.
Denon	234, 235, 236, 245, 246, 359	
Harman Kardon	215, 223, 242	
JVC	233, 232	
Kenwood	208, 200	
Marantz	224, 350	
Onkyo	209, 214, 240, 247	
Pioneer	205, 207	
Sony	222, 249	
Technics	218, 219, 221	
Yamaha	202, 201, 243, 244	
To reset to default code, enter 000		

Figure 5. Programming the remote to control your A/V receiver.

IMPORTANT

If the slide switch is set to TV when you enter an A/V receiver code, VOLUME and MUTE will control the A/V receiver rather than the TV. To return volume and mute control to the TV, set the slide switch to TV, press and hold POWER and enter 000.

IMPORTANT

Some manufacturers may change their products, or they may use more than one remote control system. If this is the case, your remote control may not be able to operate your VCR, DVD, cable box, satellite receiver, or A/V receiver.

After entering the correct codes in each position of the remote control, use the slide switch to select which product will respond when an operational button is pressed. If you enter a code from the AUDIO chart while the slide switch is set to TV, the volume and mute functions change to match the A/V receiver. This is useful when using an A/V receiver with the TV all the time. In all other cases, only one of the below devices is allowed for each slide switch position.

TV position:

- TV
- A/V receiver (volume and mute only)

Cable/DBS/DTV position:

- Cable box
- Satellite receiver
- DTV receiver

VCR position:

- VCR

DVD position:

- DVD
- LD Player

Audio position:

- A/V receiver
- Mitsubishi CD player

If you have a Mitsubishi A/V receiver, the audio position may be used in conjunction with select Mitsubishi CD players. Your audio position must be programmed to either 010 or 011. Plug the CD player power cord into a switched outlet on the back of your A/V receiver. Pressing the POWER button turns On the A/V receiver, along with the CD player. In the audio position, for some CD players, the transport controls (FF, Play, Rew, etc.) operate the CD player.

Remote Control Functions: Special Functions

When your remote control has been Programmed to operate another manufacturer's product, the function performed on each layer may vary. The most common functions are:

VCR
- POWER
- CHANNEL up/down
- PLAY
- REC
- PAUSE
- STOP
- FF/FWD
- REW/REV

Mitsubishi VCRs will be compatible with some additional buttons

Cable Boxes and Satellite Receivers
- POWER
- CHANNEL up/down
- 0-9 number buttons (on some models)
- ENTER (on some models)
- CANCEL (on some models)
- ADJUST up/down/ left/right (on some models)
- GUIDE (on some models)

A/V Receivers
- POWER
- VOLUME
- MUTE

Mitsubishi A/V Receivers
- Direct Input Selection buttons: numbers, SQV and QV (on some models)

Mitsubishi CD Players (not all functions for all models)
- PLAY
- FF/FWD
- REW/REV
- PAUSE
- STOP

DVD and Laser Disc Players (not all functions for all models)
- POWER
- MENU
- 0-9 number buttons (on some models)
- PLAY
- STOP
- ARROW up/down/left/right (on some models)
- FF/FWD
- REW/REV
- PAUSE
- CANCEL (on some models)
- ENTER
- CHANNEL (on some models)

Operation of PIP and POP

Picture-In-Picture (PIP) and Picture-Outside-Picture (POP) features allow you to view Programming in different ways. While watching the main screen, you can display programs from other channels and other inputs. To see which inputs can and cannot be used together, see *How Connections Affect the PIP and POP*, page 22. You can display large and small PIPs, side-by-side pictures, three POPs, or nine POPs.

Activating the PIP and POP

Press PIP/POP to choose a display format. Each time the PIP/POP button is pressed on the TV remote control (within 3 seconds of each other), the PIP/POP cycles through the following display options.

1. **POP:** side-by-side pictures
2. **POP:** three POPs
3. **POP:** nine POPs
4. **PIP:** large PIP
5. **PIP:** small PIP

To turn PIP/POP **Off**, wait at least 10 seconds, and press PIP/POP. The next time you activate PIP/POP, the last used PIP/POP format will be displayed first.

IMPORTANT NOTES

Warning: Do not leave stationary PIP/POP, or letterbox images on the screen for extended periods of time. Mix the types of pictures shown. Uneven picture tube aging is NOT covered by your warranty.

The normal use of a TV should include a mixture of TV picture types. The most frequently used picture types should fill the screen with constantly moving images rather than stationary images or patterns.

Displaying the same stationary patterns over extended periods of time or displaying the same stationary pattern frequently can leave subtle but permanent ghost images. To avoid this, mix your viewing pattern and reduce the initial contrast level. Do not show the same stationary image for more than 15% of your total TV viewing in any given week. Display constantly moving and changing images that fill the screen whenever possible.

This projection TV uses picture tubes to project the image to the screen. All picture tubes age with use. As they age, their light output is gradually reduced. Normal TV pictures fill the screen with constantly changing images. Under these conditions, picture tubes age at an even rate across the entire screen. This maintains a TV picture that is evenly bright over the whole screen. Stationary images or images that only partially fill the screen (leaving black or colored bars to fill the screen), when used over extended periods of time or when viewed repeatedly, can cause uneven aging of the phosphors and leave subtle ghosts from the stationary images in the picture.

Still or stationary images may be received from broadcasters, cable channels, satellite channels, DVD discs, video tapes, laser discs, on-line services, web/Internet searching devices, video games, digital TV tuner/converter boxes and karaoke machines.

Examples of these types of images can be, but are not limited to the following:

- **Letterbox top/bottom black bars**
  Shown at the top and bottom of the TV screen when you watch a widescreen (16:9) movie on a standard (4:3) TV.

- **Side bar images**
  Solid bars shown on each side of an image when watching a standard (4:3) program on a widescreen (16:9) TV.

- **News and stock-market report bars**
  Ticker running at the bottom of the TV screen.

- **Shopping channel logos & pricing displays**
  Bright graphics that are shown constantly or repeatedly in the same location.

- **Video game patterns and scoreboards**

- **Bright station logos**
  Moving or low-contrast graphics are less likely to cause uneven aging of the picture tubes.

- **Online (Internet) websites**
  Or any other stationary or repetitive computer style images, including digital photos or computer applications/programs.

- **Closed Captioning**
  Mitsubishi recommends using a gray background rather than a black or a bright color if you frequently use closed captioning.

Chapter . . . 4

Menu Screen Operations

The ViewPoint® Menu System 32
MAIN Menu 33
SETUP Menu 35
CAPTIONS Menu 40
CHANNEL EDIT Menu 42
V-CHIP LOCK Menu 45
ADVANCED FEATURES Menu 50
AUDIO/VIDEO SETTINGS Menu 55

WARNING: Do not display the same stationary images on the screen for more than 15% of your total TV viewing in one week. Examples of stationary images are letterbox top/bottom bars from DVD or other video sources, side bars when showing standard TV pictures on widescreen TV's, news and stock market reports, video game patterns, station logos, black or bright closed caption backgrounds, web sites, or stationary computer images. Such patterns can unevenly age the picture tubes causing permanent damage to the TV. Please see pages 6, 12 or 30 for a more detailed explanation.

The ViewPoint® Menu System

Mitsubishi's exclusive ViewPoint® on-screen operating system provides on-screen information for menu choices and changes.

A picture (icon) will be highlighted and can be selected using the remote control's ADJUST arrows.

When selected, the appropiate menu will appear or start an automatic function. You may then make changes within the menu or access available sub-menus.

A highlighted square button indicates that you may make changes to the menu screen.

The ViewPoint® system includes the following special features:

- The currently selected icon or button is highlighted with a rectangular yellow outline and the text color will be yellow.
- On-screen instructions provide complete menu choice information.
- Some on-screen menu options must be set before other options are available. For example, "Timer Menu" will only be possible if "Clock Time" and "Set Day" have been set.

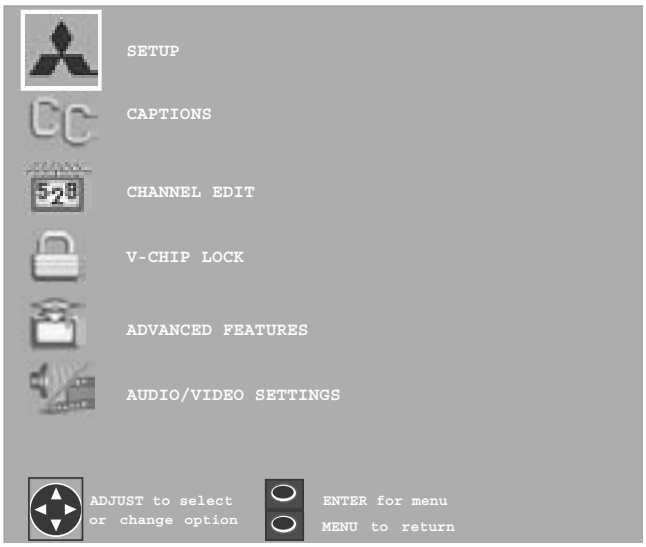

Figure 1. MAIN menu: The first screen to appear when you press MENU button on the remote.

The following remote control buttons allow you to move quickly through the ViewPoint® system (Figure 2):

ADJUST ▲ or ▼ to select the menu item you want to change.

ADJUST ▶ to move to the setting field.

ADJUST ▲ or ▼ to change the settings.

ADJUST ◀ to move back to the menu item.

ENTER to enter into a menu, start an automatic function, or select a checkbox.

CANCEL to clear a setting, or stop an automatic function.

MENU to move back one menu screen at a time.

HOME to exit all menus at once and return to TV viewing.

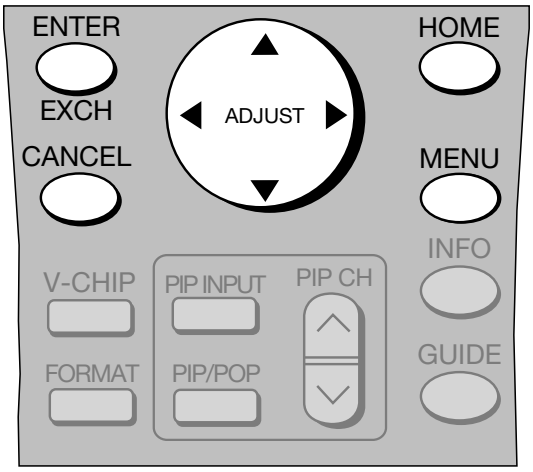

Figure 2. Remote control buttons used for navigation within the ViewPoint® on-screen operating system.

Note: Mitsubishi recommends becoming familiar with the Convergence Menu (pages 53-54) during initial setup. It may be necessary to periodically use this menu throughout the lifetime of this product for optimal picture performance.

Main Menu Screens: Overview

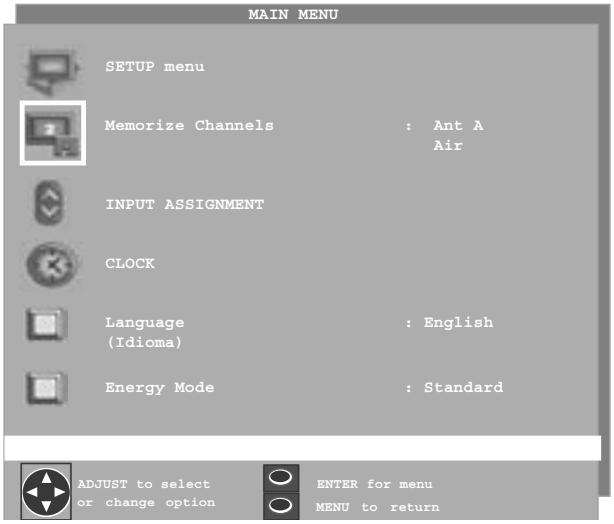

Figure 3. SETUP menu for WS-48315, WS-55315, WS-65315, WS-65315A

Figure 4. CAPTIONS menu

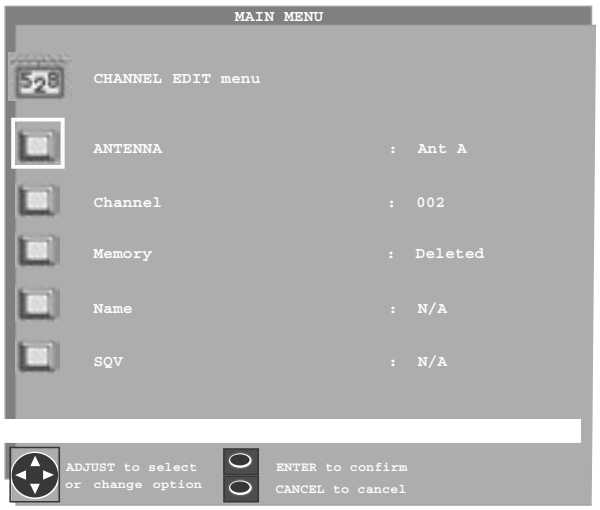

Figure 4. CHANNEL EDIT menu

SETUP Menu

(Figure 3)

Basic (initial) setup instructions and functions are available through the SETUP submenu screens. Use this menu when you relocate the TV, experience a power loss or when devices are added after initial setup.

- Memorize channels
- Assign Input Assignments
- Set the time and day
- Select English or Spanish for the menus or screen display
- Set the Front Button Lock (WT-42315)
- Set the Energy Mode (WS-48315, WS-55315, WS-65315 or WS-65315A).

See pages 35-39 for detailed setup information.

CAPTIONS Menu

(Figure 4)

Display broadcast captions or text on the screen. Select the settings by choosing to display the background color as either black or translucent gray. See pages 40-41 for detailed setup information.

Note: Mitsubishi recommends using a translucent gray background to prevent CRT aging and/or burn-in.

CHANNEL EDIT Menu

(Figure 5)

- Customize the channel information for Ant-A and Ant-B,
- Manually add or delete channels from memory
- Name channels for Ant-A and Ant-B
- Add your favorite channels to a SQV (Super Quick View™) list.

See pages 42-44 for detailed setup information.

Main Menu Screens: Overview, continued

V-CHIP LOCK Menu

(Figure 6)

Lock the TV by selecting times or choosing programs to block based on rating signals sent by your local broadcasting system.

Note: For WS-48315, WS-55315, WS-65315 or WS-65315A set the Front Button Lock at this screen.

See pages 46-49 for detailed setup information.

See page 45 for V-Chip rating information.

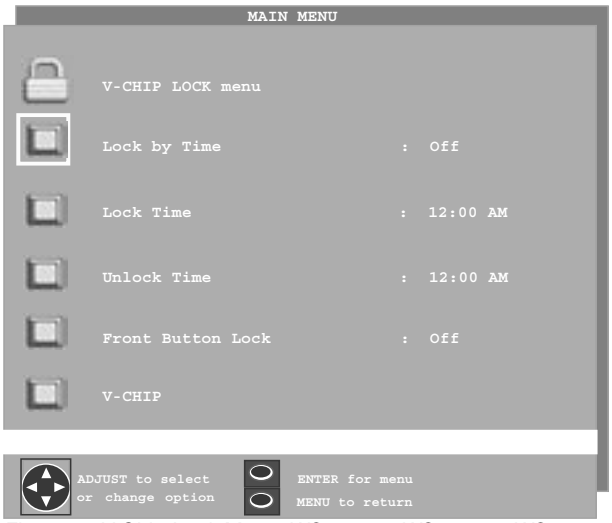

Figure 6. V Chip Lock Menu, WS-48315, WS-55315, WS-65315, WS-65315A

ADVANCED FEATURES Menu

(Figure 7)

- Adjust colors automatically or manually, using Color Balance
- Set your TV to turn on automatically
- Converge (align) the three main colors
- Display a blue screen when viewing an input with no signal
- Enhance the darker parts of bright pictures

See pages 50-54 for detailed setup information.

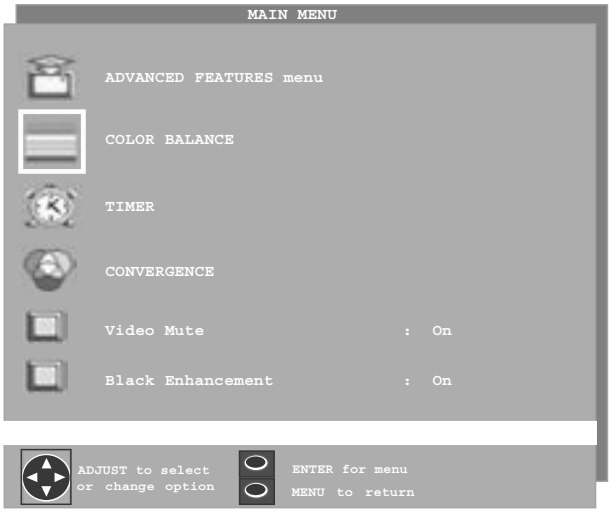

Figure 7. ADVANCED FEATURES Menu

AUDIO/VIDEO SETTINGS Menu

(Figure 8)

Adjust some or all of the A/V settings. Each input can be set to your preferences. A/V Reset on the menu allows you to return the A/V settings for the current input to the factory presets. A/V Reset on the front control panel resets all inputs at one time.

See pages 55-57 for detailed setup information.

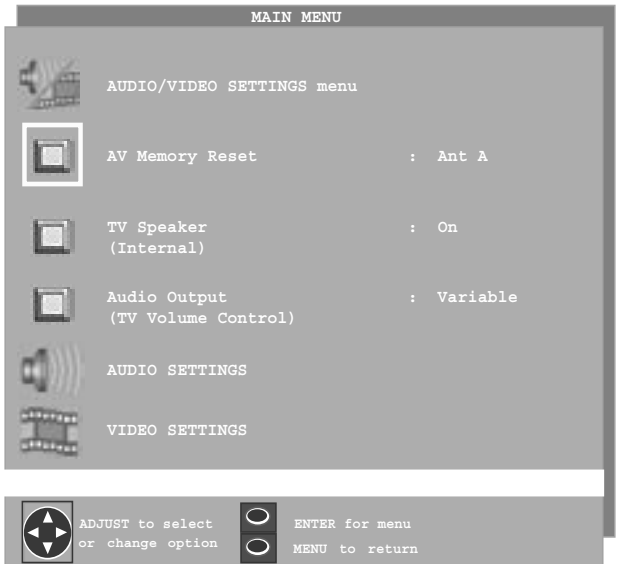

Figure 8. Audio/Video Settings Menu

SETUP Menu: Memorize Channels, Memorize Menu, Input Assignment

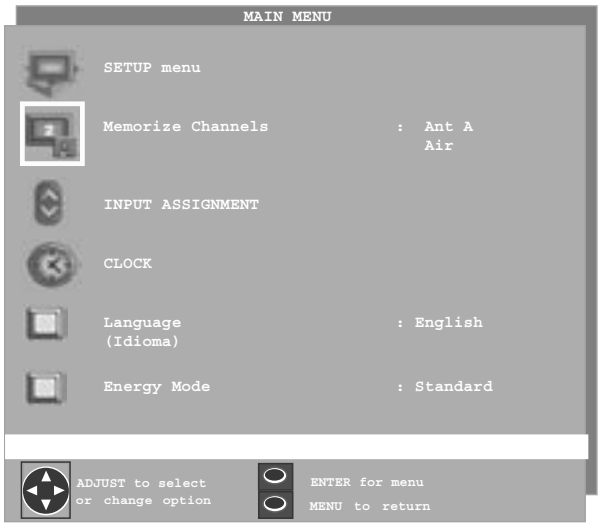

Figure 9. Memorize Channels Menu

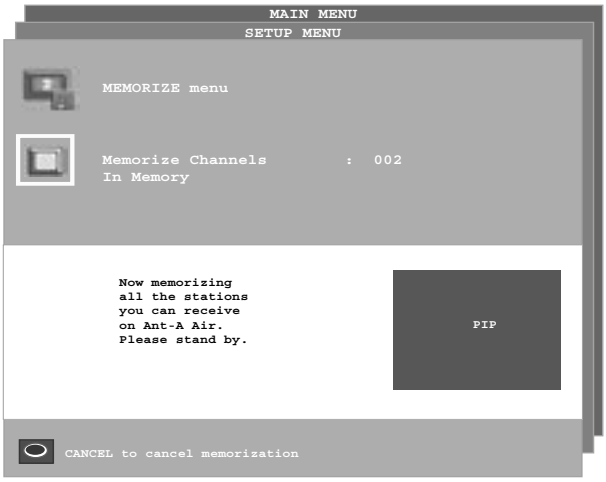

Figure 10. Memorize Menu

Figure 11. Input Assignment Menu WT-42315

Memorize Channels

(Figure 9)

Select Memorize Channels for each antenna you use. The TV will find and remember strong channels and skip the unused or weaker channels.

IMPORTANT

DTV Note: If you have a DTV receiver connected, you will need to use that receiver's channel memorization system to memorize digital channels.

MEMORIZE Menu

(Figure 10)

Stop memorization at any time by pressing CANCEL. Channels memorized prior to pressing CANCEL will stay in memory. After channels are memorized, you may select memorized channels in ascending or descending order by pressing the CHANNEL button on the remote control.

INPUT ASSIGNMENT Menu

(Figure 11)

INPUT ASSIGNMENT turns off unused inputs, turns them on again or changes the name of the input. If you turn an input Off, it will be skipped when you press INPUT on the remote control. Choices are:

- ANT-A, ANT-B: On or Off
- DTV: Y/Pb/Pr, RGB, RGBHV or Off
- COMPONENT(S)*
  Cycle through a list of preset names or Off
- INPUT-1, INPUT-2, INPUT-3:
  Cycle through a list of preset names or Off
- MonitorLink (MONLINK)
  Cycle through a list of preset names or Off

* COMPONENT-2 is not available for WT-42315.

SETUP Menu: Manually Setting the Clock

Figure 12. Clock Time

Clock Setting (Manual)

(Figure 12)

The Clock Setting menu default allows the clock time to be set manually. To set the clock automatically, please see page 37.

To set the clock manually, first select the current time, including AM or PM.

Press ▲ or ▼ to slowly adjust the time. Press and hold ▲ or ▼ to quickly adjust the time.

Figure 13. Set Day

Set Day

(Figure 13)

After manually selecting the current time, select the current day.

SETUP Menu: Automatically Setting the Clock

Clock Setting (Auto)

(Figure 14)

Set the Clock Setting to Auto to automatically set the day and time using Extended Data Service (XDS) time data. This data is automatically retrieved when tuned to a PBS channel or other channel in your area that provides this service.

Figure 14. Clock Setting (Auto)

Time Zone

(Figure 15)

Select the correct time zone (Atlantic, Eastern, Central, Mountain, Pacific, Alaska, or Hawaii) for your area when Auto has been selected as the Clock Setting.

Figure 15. Time Zone

Daylight Savings Time

(Figure 16)

Select the Daylight Savings Time (DST) option that your state uses when Auto has been selected for the Clock Setting.

Applies = uses DST

Ignore = does not use DST

The clock time and day will be set automatically after tuning to a channel carrying the Extended Data Service (XDS) time data (usually your local PBS channel).

Figure 16. Daylight Savings Time

Figure 17. Language/Idioma

Language

(Figure 17)

Display the on-screen menus in either English or Spanish (Español). The first time you powered On your TV, you were requested to select an on-screen menu language. If you choose to change the selection, all menu text will immediately switch to the language of your choice.

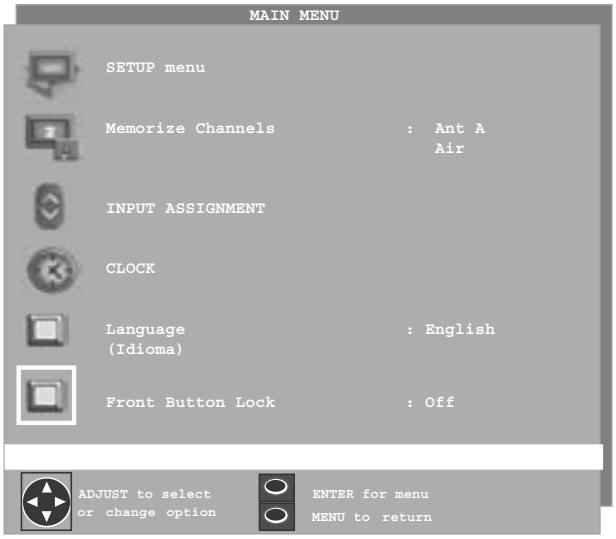

Figure 18. Front Button Lock for WT-42315

Front Button Lock for WT-42315

(See V-Chip Menu for other models)

(Figure 18)

Disable controls on the front panel to prevent anyone from accidentally changing settings.

Select On to lock out the operations of the front panel button and select Off to restore the operations of the front panel buttons.

If the front panel buttons have been locked and you misplace the remote control, you can restore the function of the front panel buttons by pressing and holding the MENU button on the front panel for more than 8 seconds. If the TV is already on, a message will be displayed to confirm the release of the Front Button Lock.

SETUP Menu: Energy Mode (WS-48315, WS-55315, WS-65315, WS-65315A)

Energy Mode

(Figure 19)

This feature is only for models WS-48315, WS-55315, WS-65315 and WS-65315A. Change the setting to Low (less than 1 watt) and the TV will operate in an energy saving mode when it is turned off.

If the Energy Mode is set to Low, it will not be possible to record while the TV's power is off. There will be no signal from LOOP OUT (on the TV back panel) to the VCR and/or cable box.

Note: The Standard setting has a faster turn on time, but uses more power than the Low setting. Standard is recommended.

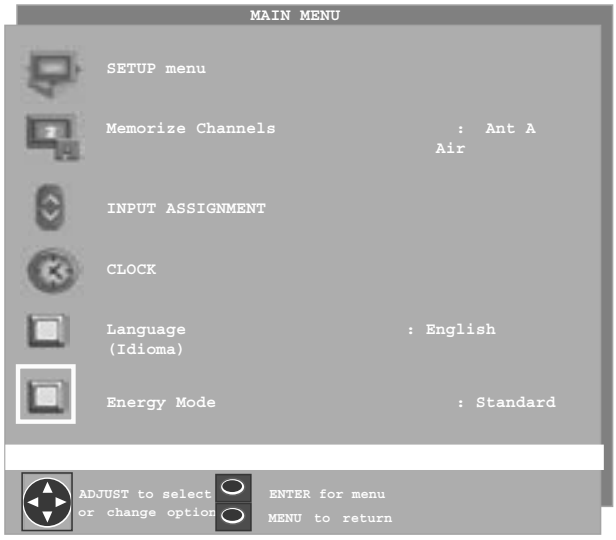

Figure 19. Energy Mode for WS-48315, WS-55315, WS-65315, WS-65315A

CAPTIONS Menu: Overview

Figure 20. CAPTIONS menu

CAPTIONS Menu

(Figure 20)

Turn On or Off the closed caption decoder, select the type of captions or text, and choose black or translucent gray as the background color for the closed caption area.

Broadcasters can send either Standard or Text closed captioning.

Standard closed captioning follows the dialogue of the characters on-screen and displays in a small section of the screen.

Text closed captioning often contains information such as weather or news and covers a large portion of the on-screen program. Your TV can decode four different standard and four different text closed captioning signals from each TV station. However, each TV station may broadcast only one or two closed captioning signals, or none at all.

IMPORTANT

When Text closed captioning is selected, a large black or gray box will appear on your TV screen if no signal is broadcast.

CAPTIONS Menu: Closed Captions, Background Color

Closed Captions

(Figure 21)

Display one of the following types of Closed Captions:

- CC1, CC2, CC3, or CC4: Standard closed captioning signals.
- Text1, Text2, Text3, or Text4: Text closed captioning signals.
- On if mute: Closed captions when mute. When selected, the standard closed captioning signal (CC1) will turn on/off by pressing the MUTE button on the TV remote control.
- Off: No closed captions.

Figure 21. Closed Captions

IMPORTANT

The content of captions is determined by the broadcaster. If your captions show strange characters, misspellings, or odd grammar, it is not a malfunction of the TV.

CC Background

(Figure 22)

Display the background color as either black or translucent gray, to make the closed captions easier to read.

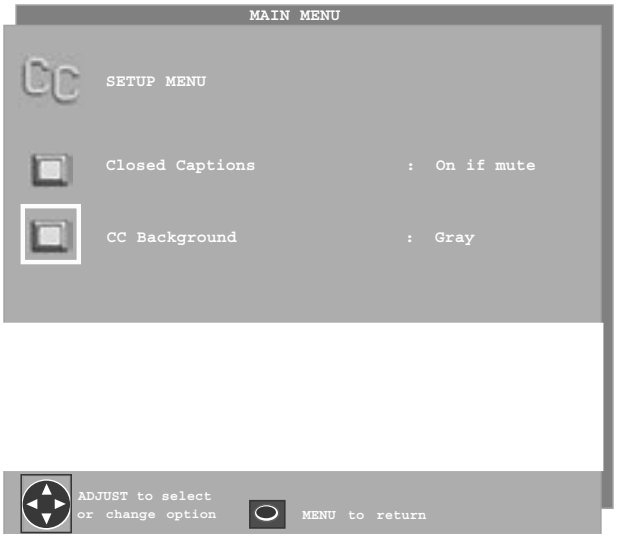

Figure 22. CAPTIONS menu

IMPORTANT

Mitsubishi recommends using the translucent gray background to prevent CRT aging and/or burn-in.

CHANNEL EDIT Menu: Antenna, Channel Selection

Figure 23. Antenna

Antenna

(Figure 23)

Select Ant-A or Ant-B. For each antenna, you can add or delete channels in memory, name channels, and add channels to the SQV (Super Quick View™) list.

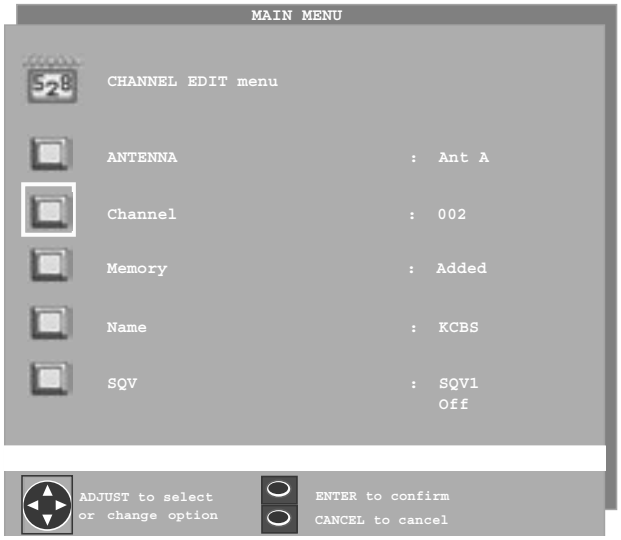

Figure 24. Channel

Channel

(Figure 24)

Select to edit the channel selections. You can add or delete from memory, name, or add to the SQV (Super Quick View™) list.

After selecting Channel, editing can be done using the Adjust buttons or entering the 3 digit channel number you want to change (Example 002 for channel 2).

CHANNEL EDIT Menu: Memory, Name Selection

Memory

(Figure 25)

Add weaker channels viewed with Ant-A or Ant-B and delete unwanted channels, after all available channels have been memorized with Memorize Channels (page 35). Use the CHANNEL button on the remote control to view memorized channels.

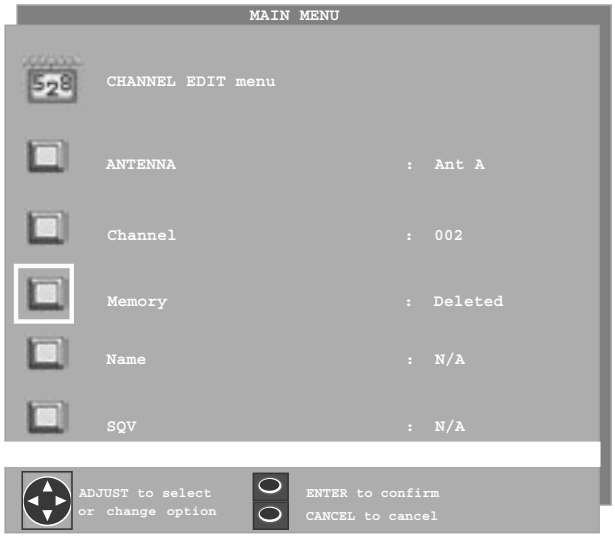

Figure 25. Memory

Name

(Figure 26)

Name channels shown on Ant-A or Ant-B (up to four characters). After you enter a name, it will appear on the TV screen next to the channel number.

1. Select Ant-A or Ant-B.
2. Select the memorized channel you want to name.
3. Press ADJUST until you see the underline highlighted in the Name field.
4. Use ADJUST ▲ or ▼ to select letters A-Z, numbers 0-9, and/or symbols (!.&'/:*- and blank) for each character of the name you would like for the selected channel. Press ENTER after choosing each letter and after the name is complete. If you want to change your selection while on the option field, use CANCEL to delete the current character. You will move one position back. If you press CANCEL while at the first character, the entire name will be deleted.

Figure 26. Name

CHANNEL EDIT Menu: Using SQV (Super Quick View™)

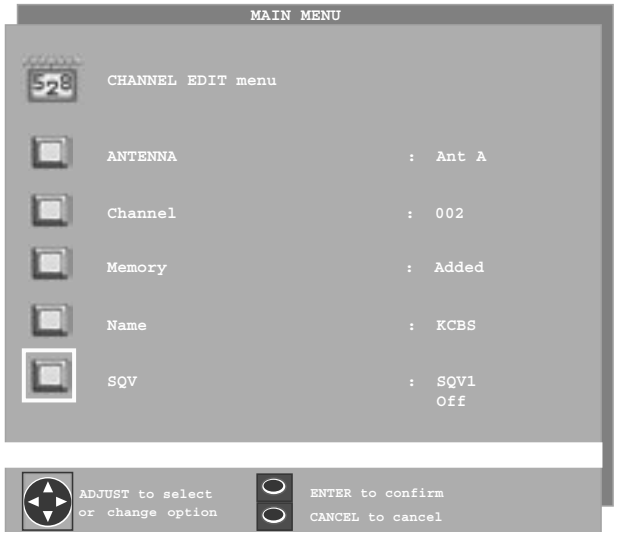

Figure 27. SQV (Super Quick View™)

Figure 28. SQV button on the remote control

Using The Menu Screen

(Figure 27)

Put together a list of your favorite channels from Ant-A and Ant-B using SQV (Super Quick View). Store up to 6 channels in each of the 9 different memory banks. After adding a channel to the SQV memory, "SQV" will appear under the channel number on the TV screen.

To change SQV choices using the menu:

1. Press ▲ or ▼ when at Channel settings or use the CHANNEL button on the remote control to select the channel you wish to add or delete from a SQV memory bank.

2. Press ▶ when at SQV in the menu to move the selector to the On/Off setting.

3. Press ▲ or ▼ when at SQV setting to select the SQV memory bank you wish to modify.

4. Press ENTER to add (On) or delete (Off) the current channel from the SQV memory bank that you have selected.

Using The Remote Control

(Figure 28)

View and add SQV channels using the remote control:

1. Use the CHANNEL or number buttons to select the channel you want to add.

2. Press and hold the SQV button for about 3 seconds. When "SQV" and the memory bank number appear under the channel number, the channel has successfully been added.

To change the SQV banks using the remote control:

1. Press the SQV button.

2. To change memory banks, press a number button within 5 seconds of pressing the SQV button.

Remove SQV channels using the remote control:

1. Press the SQV button repeatedly until you see the desired channel.

2. While the channel number and SQV indicator are still displayed on the screen, press CANCEL. If CANCEL is not pressed before the SQV indicator disappears, the channel will not be removed. When the SQV indicator disappears, the channel has successfully been removed.

V-Chip Lock Menu: Overview

V-Chip Signal Information

When provided by the broadcaster, V-Chip ratings can be used to control which programs can be viewed or will be blocked. When V-Chip ratings are sent, you will see the ratings when you change the channel or when you press the INFO button on the remote control. Both TV and Movie ratings will display. TV ratings apply to programs and movies developed for TV and may have supplemental blocking by content categories. Movie ratings use MPAA ratings for movies released in theaters.

V-CHIP EXCEPTIONS:

1. *V-Chip is effective only for programs viewed on Ant-A, Ant-B, or from devices connected to Inputs 1-3. It is not effective for programs viewed on devices connected to Component Input or MonitorLink™.*
2. *Videotapes, laser discs and DVDs may not contain V-Chip rating signals. If they don't contain the V-Chip signal, V-Chip cannot block the program or movie.*
3. *Broadcasters are not currently required to include V-Chip rating signals at this time. If the broadcaster does not include the V-Chip rating signal, V-Chip cannot block the program.*

TV Ratings:

Used with TV programs and Made-for-TV movies.

TV-Y Youth, for children under the age of 7.
TV-Y7 Youth, 7 years old and older. For children 7 years old and older.
TV-G General Audience. For the entire family to view.
TV-PG Parental Guidance. Parental Guidance is recommended, may not be suitable for some children.
TV-14 Adolescent 14 years old and older. Not recommended for children under the age of 14.
TV-MA Mature Audience. For adults only.

TV Rating	FV	D	L	S	V
TV-Y					
TV-Y7	X				
TV-PG		X	X	X	X
TV-14		X	X	X	X
TV-MA			X	X	X

Content Categories:

Used in association with the TV ratings above.

FV Fantasy Violence- applies to TV-Y7 only.
D Sexual Dialog- applies in different degrees to TV-PG and TV-14.
L Adult Language-applies in different degrees to TV-PG, TV-14, and TV-MA.
S Sexual Situations- applies in different degrees to TV-PG, TV-14, and TV-MA
V Violence (graphic or realistic)- applies in different degrees to TV-PG, TV-14, and TV-MA.

When you select a TV rating, you are selecting the least-restricted program level that can be viewed. As an example, if you select TV-PG, you are allowing programs rated TV-Y, TV-Y7, TV-G and TV-PG to be seen and blocking programs rated TV-14 and TV-MA. When you select a TV Content category, you will block all TV programs that have the same content category listing. As an example, if you select to block V (Violence) at the TV-14 level, you will also block any program that has the V category listing at the TV-PG rating level as well.

Movie Ratings:

Used with theater released movies and direct-to-video movies.

G General Audience- Designed for the entire family to view.
PG Parental Guidance- Parental Guidance is recommended, may not be suitable for some children.
PG-13 Parental Guidance 13 years old and older- Not recommended for children under the age of 13.
R Restricted- Restricted in the theater to 17 years old and older unless accompanied by an adult.
NC-17 No Children- Restricted in the theater to 18 years old and older.
X Adult- Designed for and restricted in the theater to adult audiences only.

When you select a Movie rating, you are selecting the least restricted program level that can be viewed. As an example, if you select a movie rating of PG-13, you are allowing movies rated G, PG and PG-13 to be seen and blocking movies rated R, NC-17, and X.

Programs Not Rated: Used for programs that are not rated like news, sports, weather, emergency bulletins, or movies such as those prior to or without MPAA Ratings. This does not include programs without V-Chip signals.

IMPORTANT

If you select to block programs that carry the V-Chip rating "Programs Not Rated", you may block News or Emergency Bulletins, when "None" or "NR" (Not Rated) V-Chip rating is included. Care should be used when blocking programming that is not rated.

V-CHIP Menu: Setting Up and Using V-Chip Lock Passcode

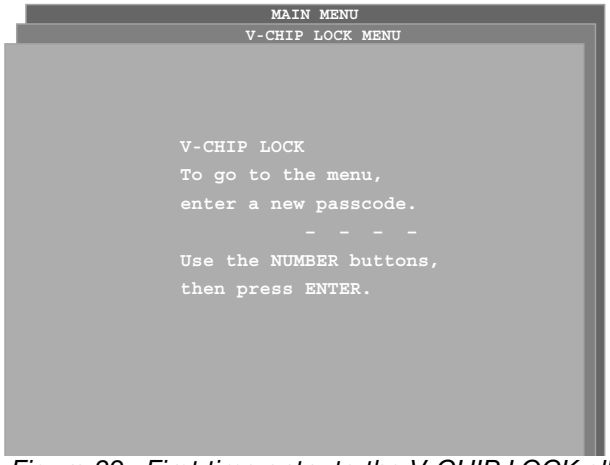

Figure 29. First time entry to the V-CHIP LOCK all models

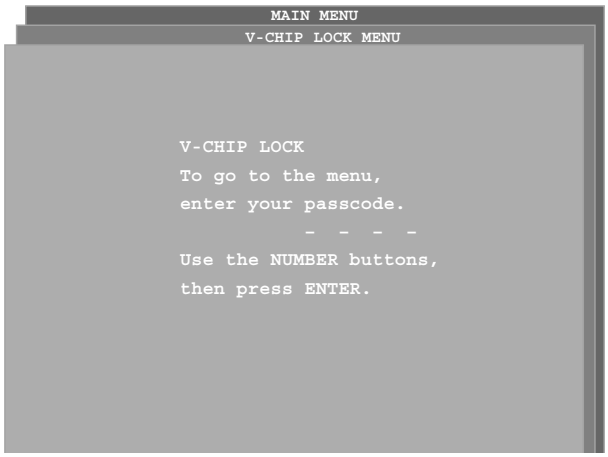

Figure 30. Re-entry to the V-CHIP LOCK all models

Setting Up the V-CHIP LOCK Passcode

(Figure 29)

Select V-CHIP LOCK from the MAIN menu for first time setup or after you have canceled your passcode. You will see the screen shown in Figure 29. Use the number buttons on the remote control to input a new four-digit passcode, then press ENTER.

Before pressing ENTER, you can delete a character and move back one character by pressing CANCEL, or leave the passcode screen by pressing MENU or HOME.

Entering the Passcode

(Figure 30)

Input your passcode as shown in Figure 30 (Note: Text changes from “a new” to “your” passcode). The next time you select V-CHIP LOCK from the MAIN menu, you will see this screen.

IMPORTANT

If you forget your four-digit passcode, see Appendix A, page 63.

V-CHIP Menu (WT-42315): Allowing or Blocking Ratings, Locking by Hour or Time

Allowing or Blocking by Ratings

(Figure 31)

Block or Allow programs based upon rating signals sent by the broadcasting station. The factory preset for TV Ratings is TV-PG (Parental Guidance) allowing only programs rated TV-PG or lower. The factory preset for Movies is PG, allowing only movies rated PG or lower. Please refer to page 45 for a detailed ratings description.

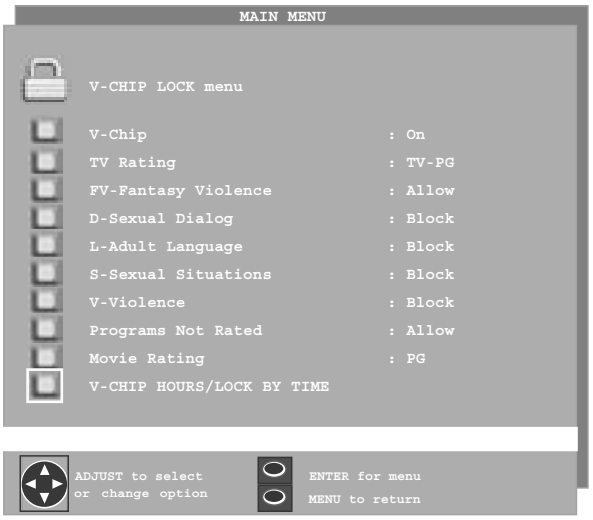

Figure 31. V-CHIP LOCK Choices WT-42315

V-CHIP HOURS/LOCK BY TIME

(Figure 32)

V-CHIP HOURS/LOCK BY TIME will allow you to activate the V-Chip or lock the entire TV during specific hours.

V-CHIP Start Time and V-CHIP Stop Time

(Figure 32)

Select the times you would like the V-Chip to be Active. By setting the V-Chip Start Time and V-Chip Stop Time to the same time, the V-Chip will be active 24 hours a day.

Press ▲ or ▼ to slowly adjust the time. Press and hold ▲ or ▼ to quickly adjust the time.

Lock by Time, Lock Time, and Unlock Time

(Figure 32)

Lock by Time locks the entire TV when Lock by Time is On and you have selected a Lock Time and Unlock Time. Your TV continues to be locked until you input your passcode, or when the locked time expires.

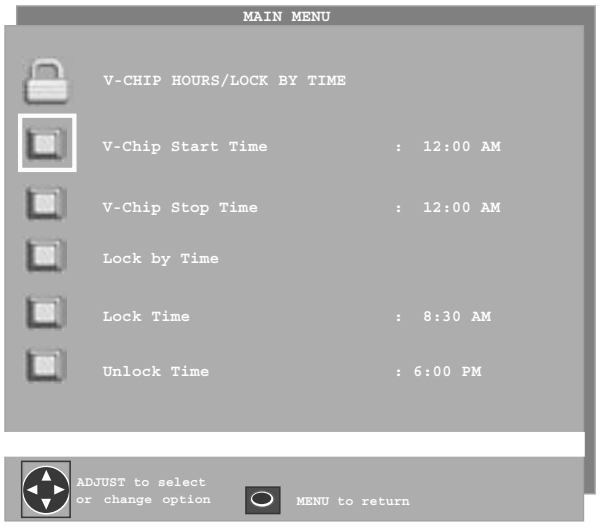

Figure 32. V-CHIP HOURS/LOCK BY TIME WT-42315

IMPORTANT

If you forget your four-digit passcode, see Appendix A, page 65.

V-CHIP Menu (WS-48315, WS-55315, WS-65315, WS-65315A): Locking by Time, Front Button Lock,V-Chip Rating Menu

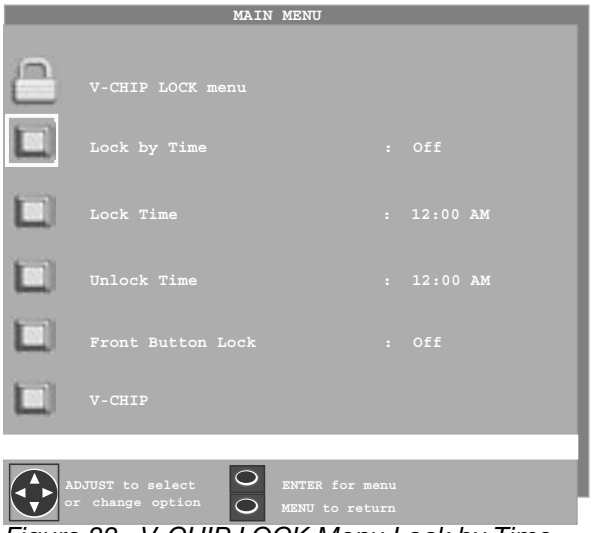

Figure 33. V-CHIP LOCK Menu Lock by Time

LOCK by Time

(Figure 33)

Select On at Lock by Time, then select the Lock Time and Unlock Time. This will lock the entire TV. Your TV continues to be locked until you input your passcode, or when the locked time expires.

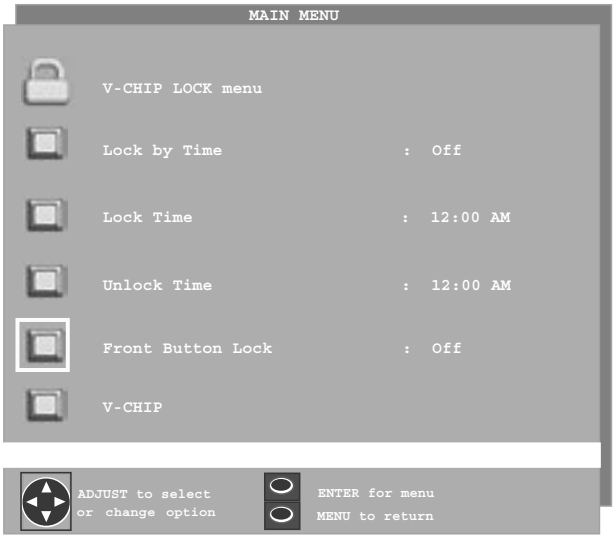

Figure 34. Front Button Lock

Front Button Lock

(Figure 34)

Setting the Front Button Lock to On will disable controls on the front panel to prevent anyone from accidentally changing settings. Off will restore the operations of the front panel buttons.

If the front panel buttons have been locked and you misplace the remote control, you can restore the function of the front panel buttons by pressing and holding the MENU button on the front panel for more than 8 seconds. If the TV is already on, a message will be displayed to confirm the release of the Front Button Lock.

Figure 35. Selecting V-Chip Rating Menu

Selecting V-Chip Rating Menu

(Figure 35)

To block or allow programs based on the rating system described on page 45, select V-Chip to go to the V-Chip Rating menu.

V-CHIP Menu (WS-48315, WS-55315, WS-65315, WS-65315A): Allowing or Blocking Ratings, Lock by Time

Allowing or Blocking by Ratings

(Figure 36)

Block or Allow programs based upon rating signals sent by the broadcasting station. The factory preset for TV Ratings is TV-PG (Parental Guidance) allowing only programs rated TV-PG or lower. The factory preset for Movies is PG, allowing only movies rated PG or lower. Please refer to page 45 for a detailed ratings description.

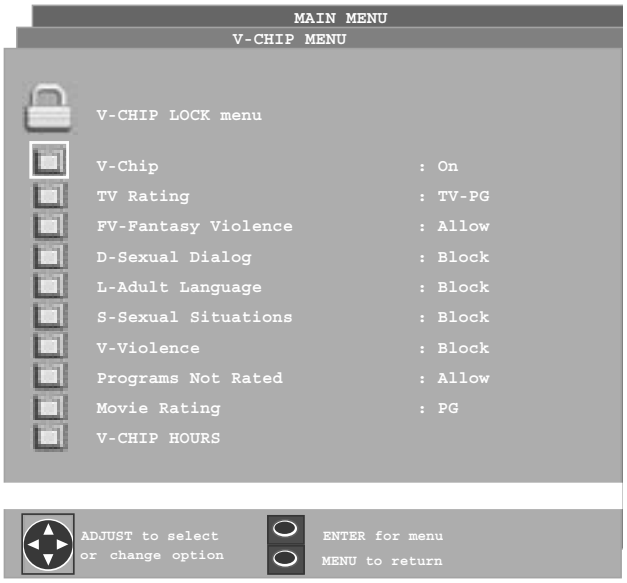

Figure 36. Ratings Menu, WS-48315, WS-55315, WS-65315, WS-65315A

V-CHIP HOURS

V-CHIP HOURS will allow you to activate the V-Chip or lock the entire TV during specific hours.

To set V-Chip Hours, select V-CHIP Hours from the V-CHIP LOCK menu.

.

V-CHIP Start Time and V-CHIP Stop Time

(Figure 37)

Select the times you would like the V-Chip to be Active. By setting the V-Chip Start Time and V-Chip Stop Time to the same time, the V-Chip will be active 24 hours a day.

Press ▲ or ▼ to slowly adjust the time. Press and hold ▲ or ▼ to quickly adjust the time.

Figure 37. V-CHIP HOURS, LOCK BY TIME for WS-48315, WS-55315, WS-65315, WS-65315A

ADVANCED FEATURES Menu: Color Balance, Auto Color Correction, PerfectColor ™, Reset Color

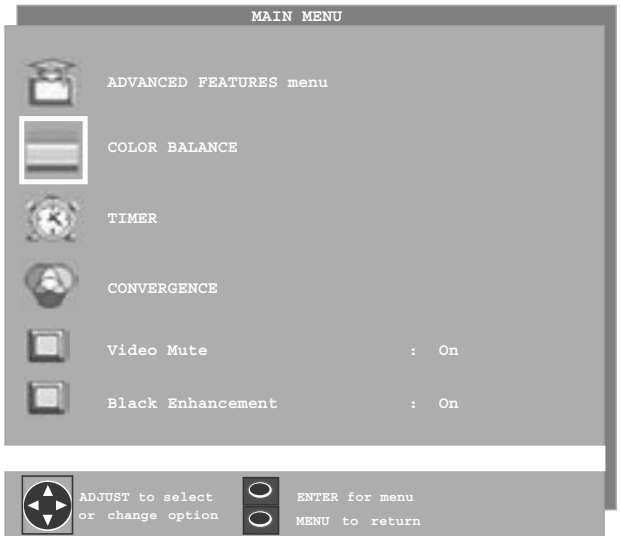

Figure 38. ADVANCED FEATURES MENU

Figure 39. COLOR BALANCE Menu

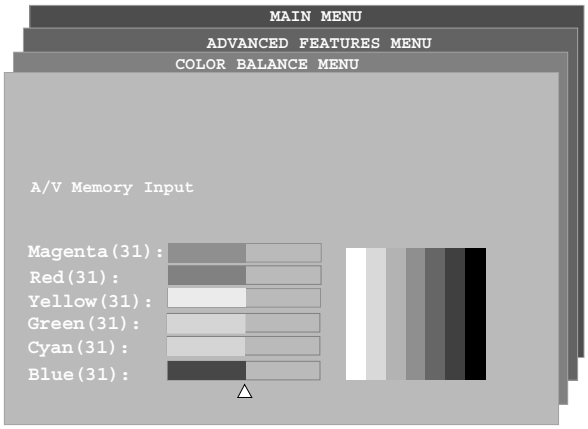

Figure 40. PerfectColor Menu

Color Balance Menu

(Figure 38)

The Color Balance Menu uses six colors (Magenta, Red, Yellow, Green, Cyan and Blue). You may adjust the intensity of these colors automatically or manually or reset them to the default settings.

Auto Color Correction

(Figure 39)

Auto Color Correction optimizes skin tone color automatically and continuously. Manual Color Adjustment and Reset Color options are grayed out and unavailable when On is selected.

PerfectColor

(Figure 40)

Certain TV channels may appear more green or red than others. This is not a malfunction of the TV and may vary by channel or broadcaster. The PerfectColor menu allows you to adjust color settings based on your preferences.

PerfectColor is only available when Auto Color Correction is turned Off. Press ENTER to display the menu for manual color adjustment. Individual color sliders will be displayed. They have a numeric value, where 63 is the maximum. The default setting for each color is 31 (center). Highlighted text will show which slider you are adjusting.

- For WT-42315 with a 480i signal, all inputs are adjusted at once.
- For WS-48315, WS-55315, WS-65315 or WS-65315A, each active input can be individually adjusted.

Press Adjust ▲ or ▼ to navigate between colors and Adjust ◀ or ▶ to change the color slider settings.

Reset Color

(Figure 39)

Select to reset the PefectColor settings.

- For WT-42315 with a 480i signal, all inputs are reset at once.
- For WS-48315, WS-55315, WS-65315, or WS-65315A each active input can be individually reset.

ADVANCED FEATURES Menu: TIMER, Timer Menu, and Set Time

TIMER

(Figure 41)

The timer will automatically turn the TV on (if it is off) at the time you schedule and select. When Ant-A or Ant-B is the selected input, you may select any memorized channel. The TV will tune to this channel when the timer turns it on.

IMPORTANT

The TV's clock must be set before you can set the timer. If you have not set the clock and/or day, you will see the CLOCK menu instead of the Timer menu.

TIMER menu

(Figure 42)

The timer can be turned On or Off. When On, you need to select the time and the day to turn On and the input and channel to display. At your preselected time, the timer will turn the TV on and a message will be displayed, "Press a key for the TV to stay on." Any button on the remote control must be pressed within 5 minutes or the TV will turn itself off.

Set Time

(Figure 43)

Select the hour and minute, including AM or PM, when the TV is to turn on.

Press ▲ or ▼ to slowly adjust the time. Press and hold ▲ or ▼ to quickly adjust the time.

Figure 41. ADVANCED FEATURES (menu Timer)

Figure 42. TIMER menu (Timer)

Figure 43. TIMER menu (Set Time)

ADVANCED FEATURES Menu: Set Day, Input, and Channel

Figure 44. TIMER menu (Set Day)

Set Day

(Figure 44)

Select the days that the TV will turn on automatically. You can select Everyday, Mon-Fri (Monday through Friday), or the individual days of the week.

Figure 45. TIMER menu (Input)

Input

(Figure 45)

Select the input to use when the timer turns on the TV. If the TV is already on, the timer will turn the TV to this selected input.

Figure 46. TIMER menu (Channel)

Channel

(Figure 46)

If the selected input is for Ant-A or Ant-B, the timer will turn the TV to the selected channel.

ADVANCED FEATURES Menu: CONVERGENCE

CONVERGENCE Menu

(Figure 47)

Your Mitsubishi TV has three picture tubes which need to be aligned to properly converge the projected light beams on the screen. Each picture tube projects a single color of red, blue or green.

During production, your TV was carefully adjusted to properly align these colors. However, moving the TV, the TV's location in relation to the Earth's magnetic poles, and the passage of time can cause these adjustments to change.

As a special feature, you have the ability to adjust the red and blue light beams in reference to the fixed green light beam. This process is called convergence. There are two separate memories for convergence. One, for SD 480i/480p signals; the other for HD 1080i signals. SD convergence should be adjusted while watching an SD source and HD convergence should be adjusted while watching an HD source.

The TV should be fully warmed up before adjusting Convergence. Turn the TV On and wait at least 30 minutes before starting adjustments.

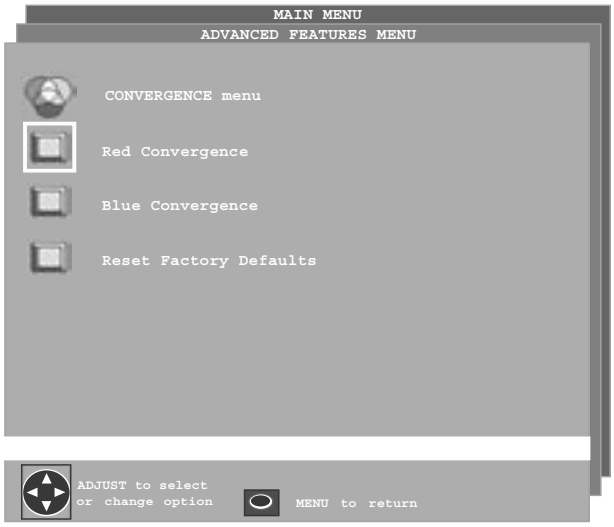

Figure 47. CONVERGENCE menu

Convergence Screen

(Figure 48)

When the Red and Blue crosshairs are properly converged, the center-screen crosshairs will appear white. You can use ▲, ▼, ◀, or ▶ to move the Red and Blue crosshairs. Press VIDEO to switch between Red and Blue. Press AUDIO for the Advanced Convergence screen.

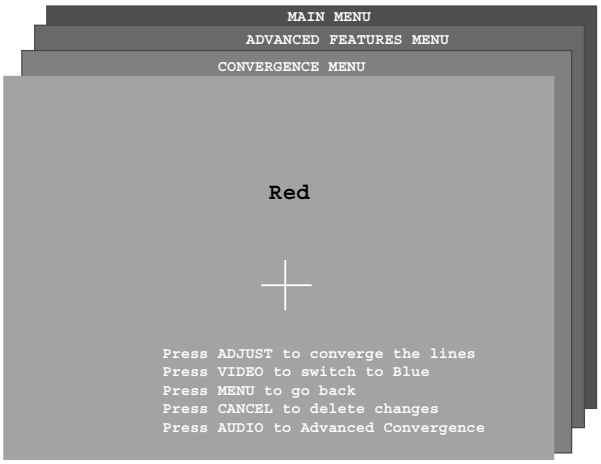

Figure 48 . Convergence screen

IMPORTANT

The convergence screen will timeout if no adjustments are made within a couple of minutes. If the screen does timeout, your adjustments will be saved. Pressing the CANCEL button will reset the convergence settings.

Advanced Convergence

(Figure 49)

After adjusting the Red Convergence and Blue Convergence, you can fine-tune your TV by adjusting the Red and Blue convergence at 64 individual points. Move the flashing bracket to a position needing adjustment by pressing ▲, ▼, ◀, or ▶.

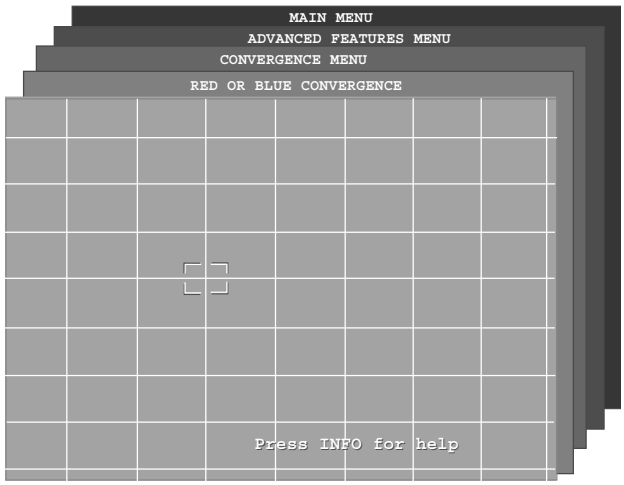

Figure 49 . Advanced Convergence screen

ADVANCED FEATURES Menu: Reset Convergence, Video Mute, Black Enhancement

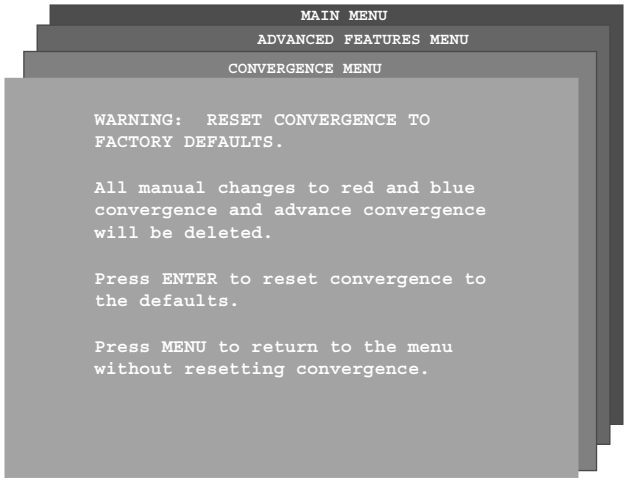

Figure 50. RESET to Factory Defaults

Figure 51. Video Mute

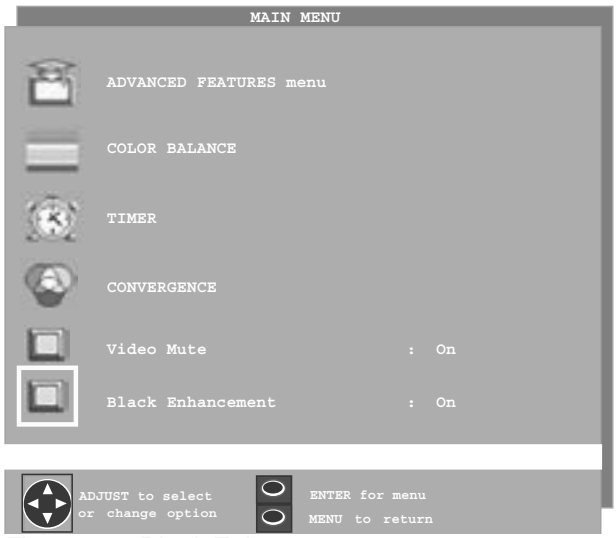

Figure 52. Black Enhancement

Press ENTER to select the position (flashing will stop). Move the Red or Blue line by pressing ▲, ▼, ◀, or ▶. Press VIDEO to switch between the Red and Blue lines.

A position is properly converged when all three lines combine to appear white. Press ENTER to deselect the position (flashing will resume), and move the brackets to the next position needing adjustment. When completed, press MENU to save your changes, and exit the Advanced Convergence screen.

Note: This is considered a fixed image. Please see Important Notes on page 6, 12 or 30.

RESET FACTORY DEFAULTS

(Figure 50)

If you do not want to reset the convergence, press the MENU key to return to the Convergence menu without performing a reset.

You may reset the red and blue convergence to factory default settings when you first use your TV or after making manual changes. Press the ENTER key to restore the convergence to the default settings. All the changes you made manually will be deleted. The message "Convergence Completed" appears when the convergence reset process ends.

Video Mute

(Figure 51)

Video Mute, (when On) lets you display a blue background when no signal is being received on Inputs 1-3, DTV, and Component 1-2 (Component only for WT-42315) and MonLink.

Black Enhancement

(Figure 52)

The contrast in dark scenes is enhanced for better picture quality. Brighter scenes will not be affected.

AUDIO/VIDEO SETTINGS Menu: Overview

AUDIO/VIDEO SETTINGS Menu

(Figure 53)

Each input has its own A/V memory. You can adjust each input's A/V memory in two ways. You can use the menu or the remote control.

A/V Memory Reset

A/V Memory Reset will return the currently selected input's A/V memory to the factory settings. To reset an input's A/V memory, select A/V Memory Reset, select the input you want to reset, and press ENTER.

TV Speakers

This selection will turn on or off the TV's internal speakers. You may select Off when sending the sound through a separate stereo system or surround sound A/V receiver.

Audio Output

Select Fixed if your audio receiver or stereo system can be controlled with a remote. This allows you to adjust the volume with the system's remote control or the TV remote control, if compatible. This setting is better for surround sound receivers. Select Variable if your audio receiver or stereo system cannot be controlled with a remote. This allows the TV's internal circuitry to adjust the volume.

AUDIO SETTINGS and VIDEO SETTINGS

(Audio Settings, Figure 54)

After selecting AUDIO SETTINGS or VIDEO SETTINGS, you can adjust the settings by pressing ▲, ▼, ◀, or ▶. For descriptions of the individual A/V settings, see AUDIO/VIDEO Setting Descriptions, pages 56-57.

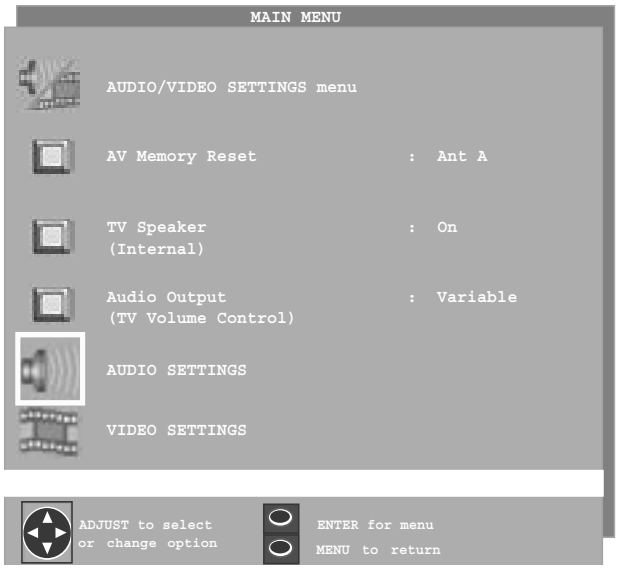

Figure 53. AUDIO/VIDEO SETTINGS menu

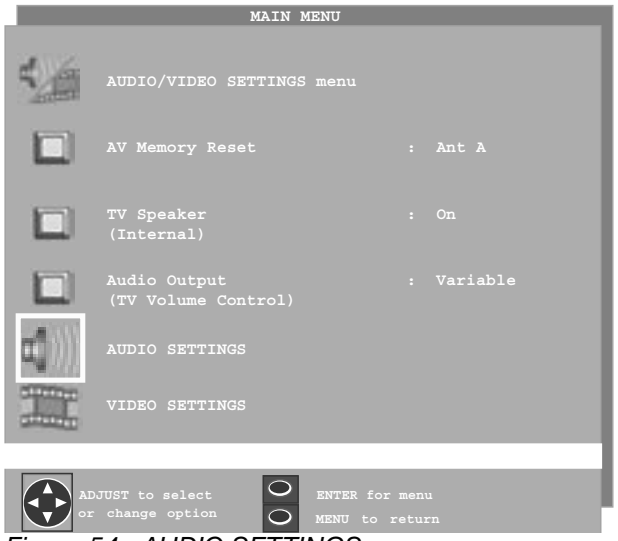

Figure 54. AUDIO SETTINGS

Using the AUDIO and VIDEO Buttons on the Remote Control

1. Press AUDIO or VIDEO to cycle through the available settings.
2. Press ◀ or ▶ to adjust the setting. After 5 seconds of inactivity, the setting display will disappear.

AUDIO/VIDEO Setting Descriptions: Audio

Audio Settings

➡ **Bass**
Enhances or reduces low frequency sound.

➡ **Treble**
Enhances or reduces high frequency sound.

➡ **Balance**
Adjusts the level of sound between the left and right speakers.

➡ **Surround**
Creates simulated stereo and surround effects. Your choices are:

- **Off:** No surround effects. Use this setting when using an A/V receiver with Dolby™ Pro Logic Surround, or Dolby™ Digital Surround.
- **Simulated Stereo:** Your TV will create a simulated stereo effect when watching a non-stereo program.
- **Surround Sound:** Your TV will create a simulated surround effect when watching a stereo program.

➡ **Listen to (for Ant-A and Ant-B)**
Determines how your TV will receive a broadcast audio signal and play back the sound you hear. Your choices are:

- **Stereo:** Default setting. The TV will play stereo broadcasts in stereo and mono broadcasts in mono. The word “Stereo” will be displayed when you tune to a channel broadcasting stereo.
- **SAP (Second Audio Program):** Additional monaural soundtrack that you cannot hear during normal TV viewing. The SAP signal might be related to the program you are watching, such as a soundtrack in a foreign language, or unrelated to the program you are watching such as a weather report. If a SAP signal is broadcast, the letters “SAP” will be displayed when you tune to the channel.
- **Mono:** Reduces background noise and should be used when receiving a weak stereo audio signal. All audio will be played mono with this setting.

➡ **Listen to (for INPUTs)**
Is not available.

➡ **Level Sound**
Automatically equalizes the volume level of programs containing significant level differences from one segment to another (for example, regular programming to commercials). To receive the best fidelity with music programs, you can turn this setting to Off.

Note: A slider will display on-screen for each setting. The slider has a numeric value, where 63 is the maximum, the mid-range is 31 and the minimum setting is 0.

AUDIO/VIDEO Setting Descriptions: Video

Video Settings

A compressed (non-HD) video signal may cause what appears to be a “blurry”, “out of focus” or “fuzzy “ picture on a widescreen TV. This is not a malfunction of the TV, but a result of the compressed signal that is sent by cable or satellite. To re-adjust the picture, try the following:

- Adjust your video settings (specifically sharpness) for optimal picture performance.
- Use the Convergence Menu (page 53) to properly align the TV.
- Change the format size (pages 60-61).

Contrast
Provides a slider to adjust the white-to-black level. Low contrast shows a variety of shades in darker images, while high contrast shows darker images more uniformly black and makes colors appear more vibrant.

Brightness
Provides a slider to adjust the overall brightness of the picture.

Sharpness
Provides a slider to adjust the detail and clarity.

Color
Provides a slider to adjust the color intensity.

Tint
Provides a slider to adjust the proportion of red to green.

Color Temp (Color Temperature)
Allows you to adjust how white images are displayed. Your choices are:

- **Low 6500K or Low (for DTV):** White images will have a warm cast to them. This adjustment is an average and can vary due to ambient room lighting, video scene brightness and the TV’s age. The Low 6500K represents the 6500K industry standard for NTSC (non-DTV) pictures.
- **Medium:** White images will be balanced between the Low (warm) and High (cool) settings.
- **High:** White images will have a cool cast to them. This setting may provide the most realistic picture under bright lighting.

Video Noise
Reduces minor noise (graininess) in the broadcast or input signal.
This function operates only in 480i mode.

Film Mode (Automatic)
Video media uses a video camera created at 30 frames per second. Film media uses a film camera created at 24 frames per second. Examples of video media are live TV broadcast such as news, special events, or video taped programs. Examples of film media are motion pictures, made-for-TV movies, and many prime time programs. Filmed media is converted by the broadcaster or home video company to 30 frames per second to match TV or video standards. This conversion can leave subtle “picture artifacts” or conversion errors.

The settings are On and Off. If you select On, the system automatically detects if the signal source is Film and corrects for conversion errors. If you select Off, the system will never correct for conversion errors.
This function operates only in 480i mode.

Note: A slider will display on-screen for each setting. The slider has a numeric value, where 63 is the maximum, the mid-range is 31 and the minimum setting is 0.

Note: For optimal picture performance, it is recommended that you adjust your video settings (specifically contrast and brightness) during initial setup. Certain factors will affect your personal preferences, including room lighting, glare reflections and viewing angles/distance. This also slows phosphor aging. If glare or reflections affect your viewing on a continual basis, you may want to remove the Diamond Shield (please refer to page 69).

This page intentionally blank

Chapter . . . 5

PIP/POP Operations

Available On-Screen Format Sizes 60
Operation of PIP and POP 62
Appendix A: Bypassing the V-Chip Lock 63
Appendix B: HD Input Connection Compatibility 65
Appendix C: Remote Control Programming Codes 66
Appendix D: Cleaning and Service 68
Appendix E: Diamond Shield™ Installation and Removal 69
Index 72
Troubleshooting 74
Warranty 75

Available On-Screen Format Sizes

Format (picture shape) availability based on Input/Signal

INPUTS	Standard	Expand 480i/480p	Expand HD 1080i	Zoom	Stretch Plus Stretch	Narrow
Ant-A 000	YES	YES	NO	YES	YES	YES
Ant-B 000	YES	YES	NO	YES	YES	YES
DTV (480i/480p)	YES	YES	NO	YES	YES	YES
DTV (1080i)	YES	NO	YES	NO	NO	NO
Input-1	YES	YES	NO	YES	YES	YES
Input-2	YES	YES	NO	YES	YES	YES
Input-3	YES	YES	NO	YES	YES	YES
Component-1 or 2 (480i/480p)	YES	YES	NO	YES	YES	YES
Component-1 or 2 (1080i)	YES	NO	YES	NO	NO	NO
DVI (480i/480p)	YES	YES	NO	YES	YES	YES
DVI (1080i)	YES	NO	YES	NO	NO	NO

Note: You can find aspect ratios on the back of most DVD covers. Also, Anamorphic DVDs are usually marked “Anamorphic” or “Enhanced for 16:9 TVs.”

Standard

Default format for DTV and Component Input displays a full-screen format. The Standard format displays Anamorphic DVDs that have the 1.78:1 or 1.85:1 aspect ratios. However, Anamorphic DVDs that have the 2.35:1 aspect ratio still display black bars at the top and bottom of the screen, while narrow (4:3) images are stretched evenly from side to side.

Expand (480i/480p)

Enlarges the picture, cropping some of the image at the top and bottom. The Expand format reduces the letterbox top and bottom bars of non-Anamorphic DVDs or to correct narrow 4:3 images that have been stretched in the Standard format.

Note: Expand is not available in the 1080i format.

HD Expand (1080i)

Enlarges the picture, cropping some of the image on both sides. This Expand format removes or reduce black side bars on HD broadcasts of 4:3 images with black bars.

Note: Expand HD is only available in the 1080i format.

Zoom

Enlarges the picture, cropping some of the image at each side, top and bottom. The Zoom format removes or reduce the black top and bottom bars on Anamorphic DVDs with 2.35:1 aspect ratio.

Note: This format is not available in the 1080i signal.

Stretch

Default format for Ant-A and Ant-B, and Inputs 1-3. The Stretched format stretches narrow 4:3 images across the screen, however, there is less stretch in the center than the sides.

Note: Stretch is not available in the 1080i format.

Stretch Plus (not available on WT-42315)

Similar to stretch mode, however to minimize distortions on the side, the picture is expanded to crop off portions of the top and bottom. Useful when no important information is shown at the top and/or bottom of the screen.

Narrow

Displays narrow 4:3 images in their original shape and adds stationary gray side bars to fill the screen. The gray bars are considered a fixed image. See Important Notes on pages 6, 12, or 30.

Note: This format is not available in the 1080i signal.

Available On-Screen Format Sizes, continued

Widescreen Picture (16:9 - HD 1080i only) Example: A True HD Broadcast

Standard (Recommended)

Expand (Recommended for 4:3 images with Black Side Bars)

Widescreen Picture (480i/480p)

Standard (Recommended)

Expand

Zoom (For letterbox 2.35:1 DVDs)

Stretch

Stretch Plus (not available on WT-42315)

Narrow (Not Recommended)

Operation of PIP and POP

Picture Inside Picture (PIP) vs. Picture Outside Picture (POP)

You have the option to view two TV shows or inputs at the same time. For example, you can watch a game show and a sports event on another channel, or a DVD movie and more. The PIP option allows you to view another input as a picture-inside-picture. The POP option allows you to view a main picture and another input as a side-by-side or three or nine pictures-outside-picture at the side (only one moving POP).

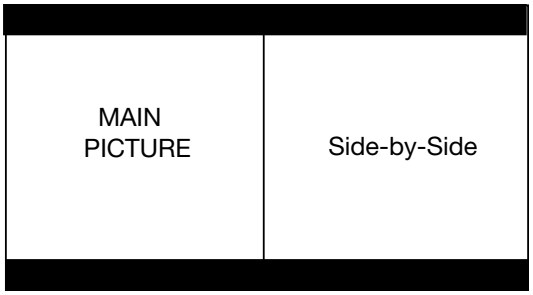

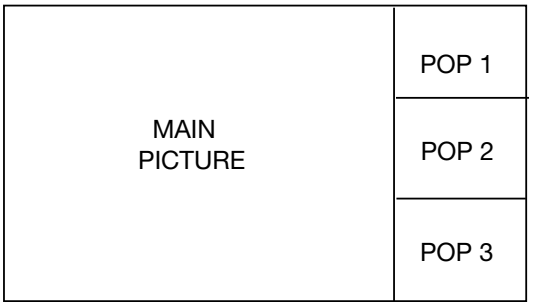

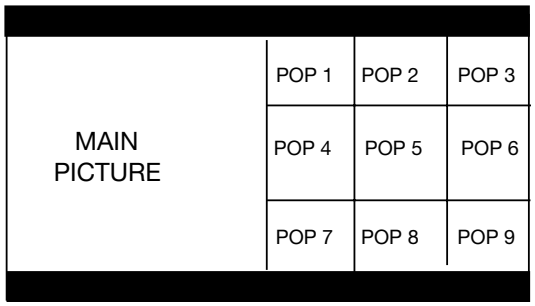

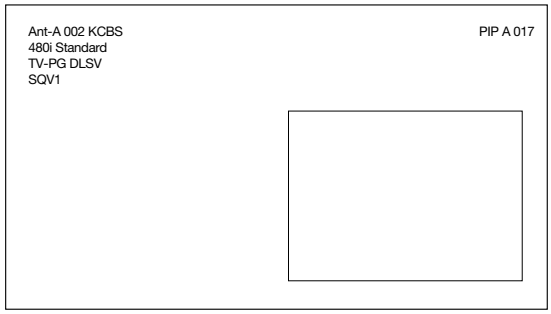

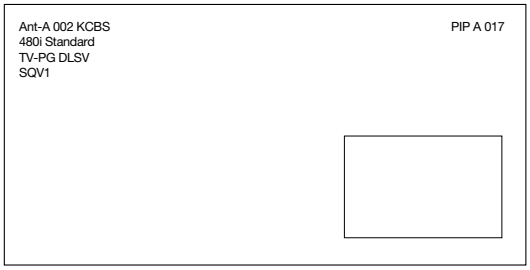

Changing PIP/POP Inputs

Press PIP INPUT to browse through available PIP or POP images.

Changing PIP/POP Channels

Press PIP CH to scroll up or down through memorized channels on the Ant-A and Ant-B.

Exchanging Program Images

Press ENTER/EXCH to exchange the main picture with the PIP / POP picture.

Moving PIP Images

Press ADJUST ▲, ▼, ◀, or ▶ to move the PIP display anywhere on the main screen.

Automatic POP Switching

Press PAUSE to activate/pause automatic POP switching. When automatic POP switching is activated, the TV cycles through memorized channels, or strobes pictures from other A/V components in the POP display.

Selecting POP "Live" Image

Press ADJUST ▲, ▼, ◀, or ▶ to select a different POP "live" image.

PIP Freeze, Side-By-Side Picture

Press PAUSE in the TV layer to freeze the PIP and side-by-side images. Press Pause again to return to a "live" image.

Appendix A: Bypassing the V-Chip Lock

Bypassing the V-Chip Lock

After you set the lock, you need your passcode to view a V-Chip locked program, view the locked TV, cancel the lock, or enter the V-Chip lock menus.

If you forget your passcode, you can view the locked TV without entering your passcode. When your password is requested, press the number 9 and QV buttons on the remote TV control at the same time. This process temporarily unlocks the TV.

When entering the V-Chip Lock menu, this process deletes your old passcode and prompts you to enter a new passcode.

IMPORTANT

Cut along the dotted line and file bypass instructions in a safe place for future reference.

IMPORTANT

When changing or deleting your passcode, you must use the remote control included with this TV. You cannot use a Mitsubishi remote control from another component or a "universal" remote.

This page intentionally blank

Appendix B: High Definition Input Connection Compatibility

Component Inputs

These inputs are compatible with most standard DVD and DTV signals with component video outputs. Compatible DTV signals are SDTV 480i, 480p, and HDTV 1080i.

All other DTV signals, such as 720p, need to be converted by the DTV receiver (or compatible device) to one of the compatible signal types. Please check the specifications on your device before connecting.

DTV Input

These inputs are compatible with most standard DVD and DTV signals with component video outputs. Compatible DTV signals are SDTV 480i, 480p, and HDTV 1080i.

All other DTV signals, such as 720p, need to be converted by the DTV receiver (or compatible device) to one of the compatible signal types. Please check the specifications on your device before connecting.

This input is also compatible with some DTV receivers using RGB or RGB with "separate H and V sync." Industry standards for DTV RGB signals systems, synchronization, timing, and signal strengths are not currently established. These inputs will not be compatible with all DTV receivers that offer RGB. If your DTV receiver offers both DTV component video signals and DTV RGB signals, Mitsubishi suggests you use the DTV component video signals. Please check the DTV receiver specifications before connecting.

Input Levels with Component Video

- Y = 1.0Vp-p (includes sync) 75ohms
- Pb = 700mVp-p, 75ohms (can also receive signals from outputs labeled B-Y and Cb)
- Pr = 700mVp-p, 75ohms (can also receive signals from outputs labeled R-Y and Cr)

Input Levels When Used With Component Video Signals

EIA - 770.3 Standard Levels

- Y = 1.0Vp-p (includes sync) 75ohms
- Pb = 700mVp-p, 75ohms
- Pr = 700mVp-p, 75ohms
- H = Not Used
- V = Not Used

Input Levels when Used With RGB Video Signals

- G (Y) = 1.0Vp-p 75ohms (compatible with sync on green)
- B (Pb) = 700mVp-p, 75ohms
- R (Pr) = 700mVp-p, 75ohms
- H = 4Vp-p+/-1.0v, 2.2k ohms (when using separate H and V sync)
- V = 4Vp-p+/-1.0v, 2.2k ohms

Input when Used With DVI

- HDCP compliant
- E-EDID (Enhanced-Extended Display Identification) 1.3 compliant
- DVI-D uncompressed, high-speed, digital single-link connection

Compatible scan rates are 1080i, 480p, 480i

Appendix C: Remote Control Programming Codes

A/V Receivers

Mitsubishi	010, 011, 012, 013, 014, 360
Admiral	220
Aiwa	225, 226, 241
B & K	352
Bose	351
Denon	234, 235, 236, 245, 246, 359, 361
Fisher	204
Gerrard	213
Harman Kardon	215, 223, 242, 362
Jensen	223, 229
JVC	232, 233
Kenwood	200, 208, 289
KLH	363
Koss	357
Magnavox	227, 228
Marantz	224, 350, 360
McIntosh	216
Nakamichi	206, 217
Onkyo	209, 214, 240, 247
Optimus	203, 227, 231, 230
Panasonic	219, 218, 221
Parasound	356
Philips	223, 248, 290
Pioneer	205, 207
Polk Audio	353
Quasar	219, 218, 221
RCA	203, 205, 227, 231, 230
Sansui	203, 211, 239
Sharp	234, 237
Sherwood	354, 355
Sony	222, 249, 364, 365
SoundDesign	238
TEAC	212, 213, 210, 211
Technics	221, 218, 219
Venturer	358
Victor	232, 233
Yamaha	201, 202, 243, 244

Cable Box

ABC	124
Archer	125
Cableview	105
Citizen	122, 105
Color Voice	128, 129, 130, 106,107
Comtronics	128, 129, 130 ,106,107
Curtis	112, 113
Diamond	124, 125
Eagle	129
Eastern	134
GC Brand	105
GE	112, 113
Gemini	122, 143
General Instrument /Jerrold	119, 120, 121, 123 124, 125, 126,127
Hamlin	112
Hitachi	103, 124
Macom	103, 104, 105, 108
Magnavox	128, 129, 130, 106, 107, 133, 138
Memorex	130
Movietime	105
Oak	102
Panasonic	114
Paragon	117
Philips	128, 129, 130, 106, 107, 133, 138, 131
Pioneer	101, 116
Pulsar	105
RCA	115
Regal	112
Regency	134
Rembrant	105, 138
Samsung	105
Scientific Atlanta	112, 113, 194
Signature	119, 124, 125, 126, 127, 120, 121, 122
SL Mark	105, 101
Sprucer	105,
Starcom	119, 124, 125, 126, 127, 120, 121, 122
Stargate	105
Teleview	101, 105
Tocom	135, 136
Toshiba	104
Unika	125
United Artists	102
United Cable	119, 124, 125, 126, 127, 120, 121, 122
Universal	122
Videoway	106
Viewstar	129, 130
Zenith/ Drake Satellite	117, 100

DVD Players

Mitsubishi	003
Aiwa	261, 274
Apex	266, 283
Bose	286
Denon	250, 273
Ferguson	251
GE/RCA/Proscan	251, 256
Harman Kardon	282, 288
Hitachi	270
JVC	257
Kenwood	271, 289
Mintek	285
Next Base	284
Normande	251
Onkyo	267, 280
Oritron	263, 268
Paite	262
Panasonic	250
Philips/Magnavox	258, 253, 272, 290
Pioneer	252
Saba	251
Sampo	263
Samsung	261
Sanyo	275
Sharp	260
SMC	275
Sylvania	264
Sony	254, 278, 279
Thompson	251
Toshiba	253, 287
Venturer	281
Vialta	277
Wave	269
XWave	269
Yamaha	250, 272, 276, 287
Zenith	259

Appendix C: Remote Control Programming Codes, continued

Satellite Receivers /DBS/DTV

MitsubishiHD/Satellite Receiver	006, 173
Echostar/ Dishnetwork	175, 82, 183, 188
Express Vu	175
GE	176
Gradient	186
Hitachi	173, 181, 184
Hughes	173
Maganavox	171, 172
Panasonic	174
Philips	171, 172
RCA/Proscan	176, 179, 180,185
Samsung	192
Sony	177
Star Choice	73
Toshiba	170, 189, 190, 191, 173
Uniden	171, 172
WebTV	187

VCRs

Mitsubishi	001, 002, 060, 067, 068, 061, 062
Admiral	055
Aiwa	047, 052
Akai	049, 034, 035, 036
Audio Dynamic	031
Bell & Howell	025
Broksonic	040, 046
Canon	043, 045
Citizen	026
Craig	025, 049, 026
Curtis Mathes	065, 044, 047
Daewoo	063, 021, 044, 078
DBX	030, 031
Dimensia	065
Emerson	023, 038, 039, 040, 045, 046, 062, 063
Fisher	025, 028, 029, 027
Funai	047, 046, 040,054
GE	065, 044, 079, 053
Go Video	057, 069, 070, 071
Goldstar	026
Gradiente	054
Hitachi	043, 065, 020,047
Instant Replay	044, 043
Jensen	059
JVC	030, 031, 054, 076, 077
Kenwood	030, 026, 031
LXI	047, 026, 020, 027, 028, 025, 029
Magnavox	051, 043, 044
Marantz	030, 031
Marta	026
Memorex	044, 029
MGA	060, 067, 068, 061, 062
Minolta	020, 065
Multitech	067, 047, 024
NEC	030, 031, 054
Olympic	044, 043
Optimus	048, 041, 055, 026
Orion	046, 040
Panasonic	043, 044, 041, 042
Penney	044, 020, 065, 025, 030, 031
Pentax	020, 031, 065
Philco	051, 044, 047, 043, 046, 040, 063
Philips	051, 043, 044
Pioneer	043
Proscan	065, 020, 043, 044, 051, 066, 021, 022, 053
Quasar	041, 042, 043, 044
Radio Shack	053, 044, 025, 056, 029, 060, 047

VCRs continued

RCA	053, 065, 020, 043, 044, 049, 051, 066, 021, 022
Realistic	044, 025, 056, 029, 060, 047
Samsung	057, 022, 024, 053
Sansui	046, 040, 072
Sanyo	025, 029
Scott	021, 022, 024, 029, 060, 067, 068, 046, 040
Sears	025, 026, 027, 028, 020
Shaintom	037
Sharp	055, 056
Signature 2000	047, 055
Singer	037
Sony	048, 049, 050, 073, 074, 075
SV2000	047
Sylvania	051, 043, 044, 047
Symphonic	047
Tashiro	026
Tatung	030, 031
TEAC	030, 047, 031
Technics	041, 042, 043, 044
Teknika	044, 047, 032
Toshiba	021
Totevision	026
Vector Research	031
Wards	055 056,029, 064, 026
Yamaha	025, 030, 031
Zenith	064,026

Appendix D: Cleaning and Service

Cleaning

Normally, light dusting with a dry, non-scratching duster will keep your TV clean. If cleaning beyond this is needed, please use the following guidelines:

First, turn off the TV and unplug the power cord from the power outlet.

Top and Sides of the TV:

- Gently wipe down your TV with a soft, non-abrasive cloth such as cotton flannel or a clean cloth diaper, lightly moistened with water. Dry with a second dry, soft, non-abrasive cloth.
- For oily dirt, add a few drops of mild liquid detergent, such as dishwashing detergent to the water used to moisten the cloth. Rinse with a second cloth moistened only with water. Dry with a third dry, soft, non-abrasive cloth.

Screen behind the Diamond Shield™:

- Follow the instructions for the top and sides, however, wipe gently in an up and down motion, following the grooves in the screen.
- Clean the entire screen evenly, not just sections of the screen.
- Do not allow liquid to drip down the grooves of the screen as some liquid may enter the TV between the screen and the screen frame.
- You may purchase Mitsubishi Screen Cleaner, part number CLEANER-VSS, by calling (800) 553-7278

Cloth speaker grills:

- Lightly brush with a soft brush cloth, or lint brush.
- If necessary, you can vacuum using the brush and hose attachments of your vacuum cleaner. Do not use the beater brush section on the grill cloth.

General Cleaning Warnings:

- DO NOT allow liquid to enter the TV through the ventilation slots or any crevice.
- DO NOT use any strong or abrasive cleaners as these can scratch the surfaces.
- DO NOT use any cleaners with ammonia, bleach, alcohol, benzine, or thinners as these can dull the surfaces.
- DO NOT spray liquids or cleaners directly on the TV's surfaces.
- DO NOT scrub or rub the TV harshly. Wipe it gently.

Service

If you are unable to correct a problem with your TV, consult your Mitsubishi dealer or a Mitsubishi Authorized Warranty Service Center.

- DO NOT adjust any controls other than those described in the Owner's Guide.
- DO NOT remove the protective back cover of your TV.

Menus not described and shown in this Owner's Guide are designed for factory use and for Authorized Service Personnel. Damage caused to the TV by non-authorized changes or changes to those menus made by non-authorized persons are not covered under warranty.

IMPORTANT

Do not use any kind of abrasive or liquid Cleaner on the surface of the TV screen or Diamond Shield.

WARNING:
THIS PRODUCT CONTAINS CHEMICALS KNOWN TO THE STATE OF CALIFORNIA TO CAUSE CANCER AND/OR BIRTH DEFECTS OR OTHER REPRODUCTIVE HARM.

Appendix E: Diamond Shield™ Installation and Removal for WS-48315, WS-55315, WS-65315 and WS-65315A

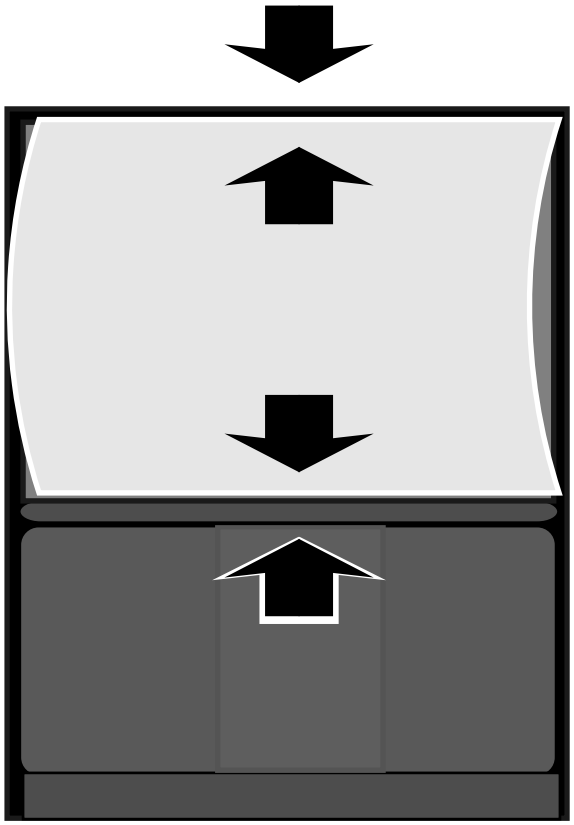

Diamond Shield Installation

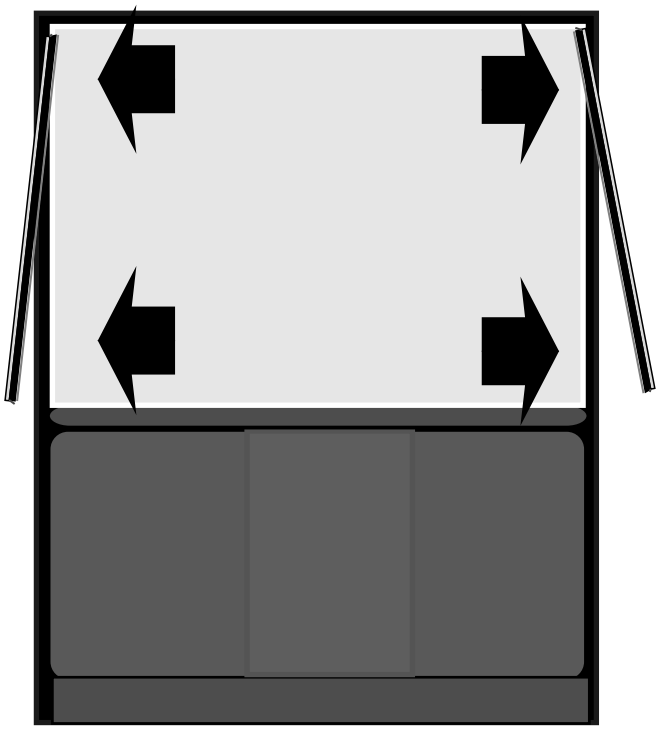

Diamond Shield, Molding Clip Removal

Follow the steps below to install and remove the Diamond Shield.

Installation:

A. Begin by inserting the shield, sliding it into the channels, starting at the bottom. Gently bow the Diamond Shield toward you and insert the Diamond Shield into the top channel.

B. Install the left and right molding clips by pressing them into the opening starting at a corner. Do not force the clip. The clip will slide into place. This completes the Diamond Shield installation.

The Diamond Shield protects the actual television (lenticular) screen, however it can be removed to reduce glare or background reflections.

Removal:

To remove the Diamond Shield, reverse the order of the above procedure.

WARNING

Sharp edges! Always wear gloves to handle, lift and install the Diamond Shield and molding clips. Sharp objects (such as tools, hand jewelry and fingernails) may scratch or damage the Diamond Shield. Use caution when removing or installing.

Mitsubishi recommends using a flat, plastic card (such as a credit card) to remove the molding clips. Store the Diamond Shield in a safe place to prevent damage.

Damage caused to the TV by non-authorized changes or actions are not covered under warranty. The Limited Warranty does not cover damage resulting from improper installation or removal of the Diamond Shield.

IMPORTANT

The Diamond Shield on the WT-42315 is not designed to be removed by the customer.

Cabinet Separation for WS-65315 and WS-65315A

This TV is very heavy! Exercise extreme care when moving TV as foreign material may become embedded in the castor wheels which could damage wood or other delicate flooring.

For Mitsubishi Dealers and Service Personnel ONLY

This Mitsubishi projection television cabinet has been assembled in two pieces. These pieces may be separated to allow for easier delivery and setup. The instructions below show how to safely separate and reattach the cabinet.

IMPORTANT

- **This projection television weighs over 320 pounds and has many sensitive components.**
- **Any dismantling procedure should be done by authorized Mitsubishi Dealers or Service Personnel ONLY.**

The following operations should be performed by two people:

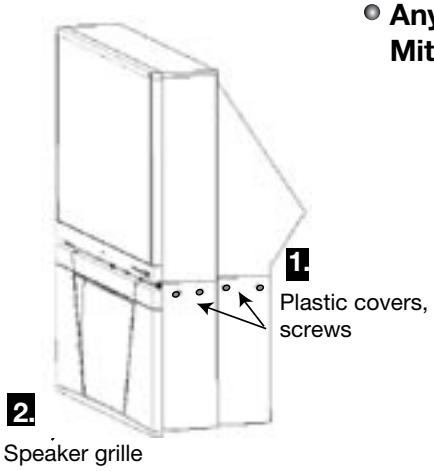

1. Remove the decorative Plastic covers (2) on each side of the cabinet and then remove the exposed screws (2) on each side.

2. Remove the Speaker grille by pulling it straight off the cabinet.

3. Disconnect the connector (ZF).

4. Carefully lift the Cabinet-Top straight up until the brackets are clear from the Cabinet-Bottom. DO NOT use the Screen Frame Bottom when lifting the Cabinet-Top.

5. Carefully place the Cabinet-Top on to the floor.

6. After moving and positioning the Cabinet-Bottom in its desired location, reverse the procedure and mount the Cabinet-Top on the Cabinet-Bottom. Be sure you align the brackets properly. Keep fingers clear of all joints! Reconnect the connector, replace the speaker grille, screws and decorative plastic covers.

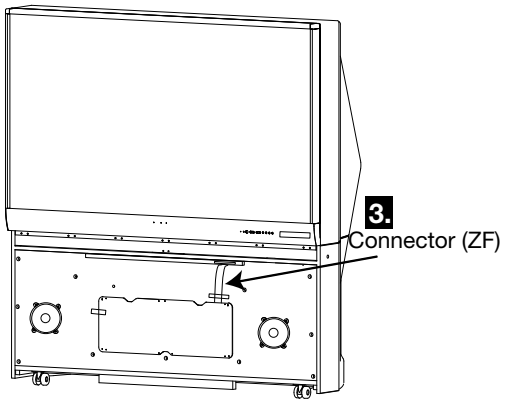

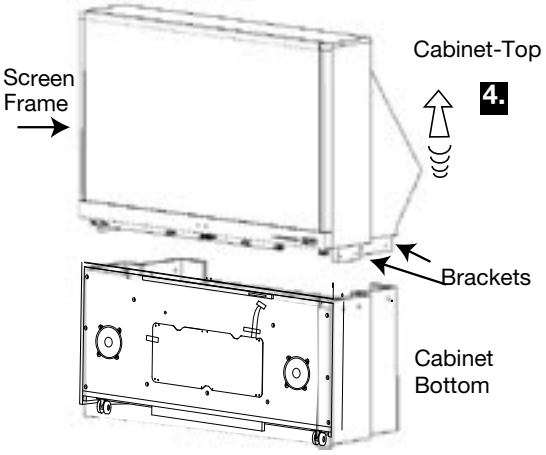

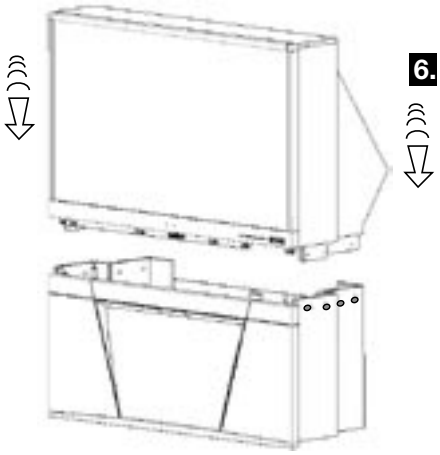

Terminal Cover Ventilation for Model WT-42315

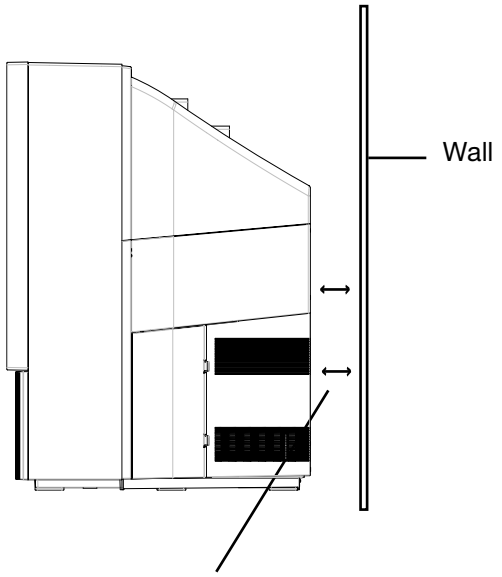

Stand Requirement

CAUTION: This PTV for use only with Mitsubishi stand MB-42413. Use with other stands may result in instability causing possible injury.

Air Circulation Tip

When considering the location or position of your TV, we recommend you place it at least 2” (inches) away from the wall. Like most electrical equipment and appliances, better air circulation allows your television to run cooler, assuring a long, trouble-free life.

Side Panel for Input Terminal

Included in the accessories bag is the side panel to cover the input terminals, located on the bottom right of your TV. See diagram. Follow the steps below to attach or remove this side panel:

1. Remove the side panel from the accessories plastic bag attached to the back of your TV.

2. Route all of the cable downward so the cover can close over them.

3. Position the three tabs directly opposite the three slots (see diagram) and gently push toward the front of the TV.

4. Slide the two push tabs into the slots on the other side of the terminals until both tabs snap into place.

Result: The side panel neatly covers the input jacks.

Reverse these steps to remove the side panel from the input terminal.

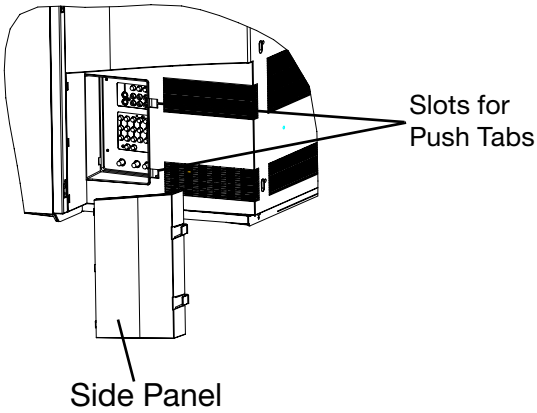

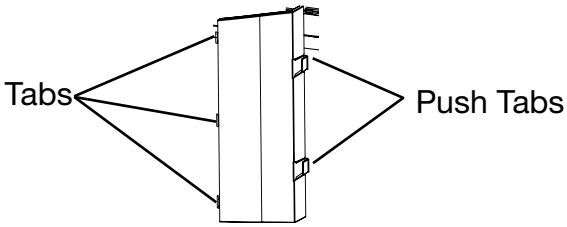

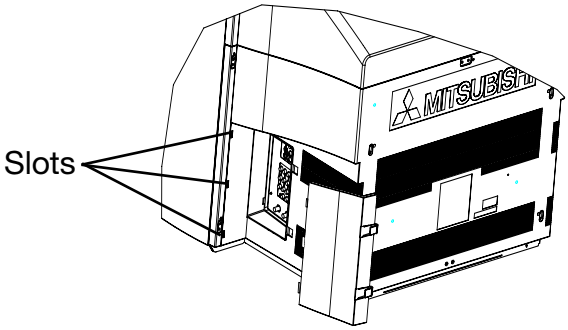

Index

A

A/V
- Memory Reset 55
- Receiver, Connecting 17

Activating the PIP and POP 29
Advanced Convergence Menu 53
Advanced Features Menu 34, 50-54
Antenna
- Channel Edit Menu 42
- Connecting 14, 15

Appendices
- A: Bypassing the V-Chip Lock 63
- B: High Definition Input Connection Compatibility 65
- C: Remote Control Programming Codes 66
- D: Cleaning and Service 68
- E: Diamond Shield™ Installation and Removal for Models WS-48315, WS-55315, WS-65315, WS-65315A 69

Audio/Video Settings Menu 34, 55
- A/V Memory Reset 55
- Audio Output 55
- TV Speakers 55

Audio Settings Menu 55
Audio Settings Description 56
Automatic POP Switching 62
Auto Color Correction Menu 50
Available On-Screen Format Sizes 60

B

Back Panel Input/Output for WS-48315, WS-55315, WS-65315, WS-65315A 11
Black Enhancement Menu 54
Bypassing the V-Chip Lock 63

C

Cabinet Separation for Model WS-65315, WS-65315A 70
Cable Box, Connecting 15, 16
Captions Menu 33, 40
- Background 41
- Closed Captions 41

Changing PIP/POP
- Channels 62
- Inputs 62

Channel Menu 42, 52
Channel Edit Menu 33, 42
Channel Selection 26
Clock Setting
- Auto 37
- Manual 36

Coaxial Lead Antenna, Connecting 14
Color Balance Menu 50
Component-1 and 2 Inputs Connection Compatibility 65
Composite Video with Audio, Connecting 16

CONNECTING
- Antenna or Wall Outlet Cable 14, 15
- Antenna to a Cable Box and VCR 16
- Antenna to a Cable Box or VCR 15
- Audio Receiver 17
- Audio Components to the Cable Box or VCR 16
- DTV Receiver 19, 20
- DVD Player 18
- MonitorLink™ 21
- S-Video Device 18

Connections Affect the PIP and POP 22
Convergence Menu
- Advanced 53
- Screen 53

D

Daylight Savings Time Menu 37
DTV
- Connectors and Adaptors 19
- Input Connection Compatibility 65

DTV Receiver with
- Component Video Connections 19
- RGB Video Connections 20

DVD Player with Component Video 18
DVI, Connecting 21

E

Energy Mode for WS-48315, WS-55315, WS-65315, WS-65315A 39
Entering the Passcode for V-Chip 46
Exchanging Program Images PIP and POP 62

F

Freeze the
- PIP 62
- Side-By-Side Picture 62

Front Button Lock for
- WS-48315, WS-55315, WS-65315, WS-65315A 48
- WT-42315 38

Front Control Panel 10

I

IMPORTANT
- Notes 6, 12, 30
- Safeguards 4

Input Menu 52
Input Assignment Menu 35
Input Levels when used with
- RGB Video Signals 65
- Component Video 65
- Component Video Signals 65

Input when used with DVI 65

L

Language Menu 38

Lock by Time for
WS-48315, WS-55315, WS-65315, WS-65315A 48
WT-42315 47
Lock Time for WT-42315 47

M

Main Menu Screens: Overview 32
Memorize Channels Menu 35
Memorize Menu 35
Memory Menu 43
Menus (also see individual topic)
Advanced Features 50
Audio/Video Settings 55
Captions 40
Channel Edit 42
Main 32
Setup 35
V-Chip Lock 45
MonitorLink, Connecting 21
Moving PIP Images 62

N

Name Menu 43

P

PerfectColor™ 50
PIP and POP
Activating 29
Changing 62
Freezing 62
How Connections Affect 22
Operation 62
POP “Live” Image, Selecting 62

R

Remote Control Functions
Care 25
Channel Selection 26
Operation 25
PIP and POP 29
Overview of the TV Layer Button 24
Sleep Timer 26
Special Functions 29
Use with Other Brands of A/V Products 27
Reset Color 50
Reset Factory Defaults, Convergence Menu 54

S

S-Video
Audio, Connecting 16
Device, Connecting 18
Separate UHF and VHF Antennas, Connecting 14
Setting Up the V-Chip Lock Passcode 46
Setup Menu 33
Set Day Menu 36, 52
Set Time Menu 51
Side Panel Input/Output for WT-42315 11
Sleep Timer 26
Special Features 9
SQV™ Using the
Menu Screen 44
Remote Control 44
Stereo Audio System, Connecting 17

T

Timer Menu 51
Time Zone Setting 37
Troubleshooting 74
TV Speakers Menu 55
Twin Lead Antenna, Connecting 14

U

Unlock Time for WT-42315 47
Use of the Remote Control with Other A/V Products 27, 28
Using the AUDIO and VIDEO Buttons on the Remote Control 55

V

V-Chip
Allowing or Blocking by Ratings
for WS-48315, WS-55315, WS-65315, WS-65315A 49
for WT-42315 47
Exceptions: 45
V-Chip Hours Menu for
WS-48315, WS-55315, WS-65315, WS-65315A 49
WT-42315 47
V-Chip Lock Menu 34, 45-49
Overview 45
Signal Information 45
Start Time, WS-48315, WS-55315, WS-65315, WS-65315A 49
Start Time, WT-42315 47
Start Time, WS-48315, WS-55315, WS-65315, WS-65315A 49
Stop Time WT-42315 47
V-Chip Rating Menu, Selecting 48
Video Mute 54
Video Settings Description 57
Video Settings 55
Viewpoint Menu System 32

W

Wall Outlet Cable, Connecting 14
Warranty 75

Troubleshooting

	Problem	Possible Solution
1.	• The TV remote control does not work.	• Check that the batteries are installed correctly. • Check that the selected switch is set to “TV”. • Be no further than 20 feet from the TV when using the remote control.
2.	• The TV takes several seconds to respond to channel commands.	• Press ENTER after a channel number to avoid delays. • Use the three digit number, i.e 002 for channel 2.
3.	• You cannot access a channel.	• Use number keys instead of CHANNEL up/down. • Be sure the channel you want to view is in memory. • Check that the TV is turned to the correct input source for that channel, by pressing the INPUT button. • Make sure the V-Chip setting is Off (page 47).
4.	• On-screen displays appear each time you change a function.	• This is part of normal TV operation.
5.	• The TV cannot be programmed to turn on automatically.	• The TV may be locked. • The clock may not be set.
6.	• There is no sound even when the volume is turned up.	• Check to see if the MUTE button is on. • The TV’s “Listen to:” setting may be set to SAP. • Check that “TV Speakers” setting is On.
7.	• You have forgotten your lock passcode.	• See Appendix A, Bypassing the V-Chip Lock (page 63).
8.	• Connected devices do not work correctly when the TV is off.	• Energy Mode has been set to Low. Change to Standard (page 39).
9.	• PIP does not display a picture.	• Make sure the V-Chip setting is Off (page 47). • Not all inputs can be displayed as a PIP (page 22).
10.	• The sound does not match the screen picture.	• The TV’s “Listen to:” setting may be set to SAP. • If using stereo or A/V receiver speakers, check input selection on the stereo or A/V receiver. • If using stereo or A/V receiver, check that AUDIO is from MONITOR OUT on TV’s back panel.
11.	• There is a large black or gray rectangle on the screen.	• TV closed captioning has been set to “text” mode, but no text information is being broadcast. Turn Off in the CAPTIONS menu (page 40).
12.	• Picture is out of focus, or colors are not aligned.	• Adjust Convergence (page 53). • Check the Sharpness settings (page 57).
13.	• You cannot see a picture when you play a VCR tape.	• If you connected your VCR with A/V cables, use the INPUT button to select the Input source (INPUT-1, INPUT-2, or INPUT-3) that the VCR is connected to. • Check your VCRs owner’s guide for further troubleshooting.
14.	• There is no picture when using MonitorLink/DVI input with an HDTV receiver or DVD player.	• Make sure device is set to Output DVI in Device Menu. • You may need to hook up to an analog input for initial setup.
15.	• No picture displays when using component inputs.	• Make sure device is set to output at 480p or 1080i via YPbPr or RGB (check device output for compatibility).
16.	• V-Chip is not working.	• Make sure that V-Chip is On (page 47). • If V-Chip Hours/Lock by Time is currently set to disable the V-Chip lock, the V-Chip will not block programming.
17.	• Cannot set adjustments to factory setting.	• Follow the steps below to reset system defaults to factory settings: 1. Press the MENU button followed by number buttons 1,2,and 3 on the remote control. **Result:** The Reset System Default menu screen is activated. 2. Press the ENTER button on the remote control. **Result:** The settings reset to factory defaults. 3. Press HOME or MENU on the remote control to return to the HOME or MENU screen. **IMPORTANT:** This function is not recommended unless it is mandatory to reset system defaults to factory settings. This operation CANNOT be undone and all customs settings will be erased.

MITSUBISHI PROJECTION TELEVISION LIMITED WARRANTY

MITSUBISHI DIGITAL ELECTRONICS AMERICA, INC. ("MDEA") warrants to the original purchaser of this television that if purchased from an authorized MITSUBISHI Audio/Video Dealer, should it prove defective by reason of improper workmanship and/or material:

a. **Parts**. The lenticular (i.e. front picture) screen and/or the DiamondShield™ is warranted against defects in materials and workmanship for a period of 30 days. All other parts are warranted for a period of one year from the date of the original purchase at retail. We will repair or replace, at our option, any defective part without charge for the part. Parts used for replacement may be replaced with those of like kind and quality and may be new or remanufactured. Parts used for replacement are warranted for the remainder of the original warranty period.

b. **Labor.** For 30 days after the original purchase at retail, we will repair or replace, at our option, the lenticular screen if it proves defective. For all other parts, we will provide the labor for a warranty repair by an authorized MITSUBISHI service center without charge for one year from the original date of purchase at retail.

c. **Notice.** To obtain warranty service, you must notify an authorized MITSUBISHI service center of any defect within the applicable warranty time period.

1. TO OBTAIN WARRANTY SERVICE:

a. Contact your nearest authorized MITSUBISHI service center whose name and address can be obtained from your MITSUBISHI dealer or by writing or calling MDEA at the address and telephone number provided below.

b. Warranty service will be provided in your home or, if required, at an authorized service shop, provided that your television is located within the geographic territory customarily covered by an authorized MITSUBISHI service center. If not, you must either deliver your television to an authorized service location at your own expense, or pay for any travel and/or transportation costs the service center may charge to and from your home. Actual service labor will be provided without charge.

c. Proof of purchase date from an authorized MITSUBISHI dealer is required when requesting warranty service. Present your sales receipt or other document which establishes proof and date of purchase. THE RETURN OF THE OWNER REGISTRATION CARD IS NOT A CONDITION OF WARRANTY COVERAGE. However, please return the Owner Registration Card so that we can contact you should a question of safety arise which could affect you.

2. THIS WARRANTY DOES NOT COVER damage to Diamond Shield, Lenticular screen or Fresnel lens, screen frame, cosmetic damage or to any other product where such damage is caused by unauthorized modification, alteration, repairs to or service of the product by anyone other than an authorized MITSUBISHI service center; physical abuse to or misuse of the product (including any failure to carry out any maintenance as described in the Owner's Guide or any product damaged by excessive physical or electrical stress); any products that have had a serial number or any part thereof altered, defaced or removed; product use in any manner contrary to the Owner's Guide (including uneven picture tube aging and imprinted images on the viewing screen); freight damage; or any damage caused by acts of God or other factors beyond the reasonable control of MDEA, such as power surge damage caused by electrical system or lightning. This warranty also excludes service calls where no defect in the product covered under this warranty is found, service calls related to unsatisfactory audio or visual reception or signal unless caused a defect in the product that is covered under this warranty, all costs, expenses or any other damages arising from product installation, or set-ups, any adjustments of user controls (including convergence, contrast, brightness, color, tint, fine tuning, sharpness), other adjustment necessary to prepare the unit for display or use, connection with any external audio receiver, antenna, cable or satellite systems, or service of products purchased or serviced outside the U.S.A. Please consult the operating instructions contained in the Owner's Guide furnished with the product for information regarding user controls.

3. ANY EXPRESS WARRANTY NOT PROVIDED HEREIN, AND ANY REMEDY WHICH, BUT FOR THIS PROVISION, MIGHT ARISE BY IMPLICATION OR OPERATION OF LAW, IS HEREBY EXCLUDED AND DISCLAIMED. THE IMPLIED WARRANTIES OF MERCHANTABILITY AND FITNESS FOR ANY PARTICULAR PURPOSE ARE EXPRESSLY LIMITED TO A TERM OF ONE YEAR.

4. UNDER NO CIRCUMSTANCES SHALL MDEA BE LIABLE TO PURCHASER OR ANY OTHER PERSON FOR ANY INCIDENTAL, SPECIAL OR CONSEQUENTIAL DAMAGES, WHETHER ARISING OUT OF BREACH OF WARRANTY, BREACH OF CONTRACT, OR OTHERWISE.

5. Some states do not allow limitations on how long an implied warranty lasts, or the exclusion or limitation of incidental, special or consequential damages, so the above limitations or exclusions may not apply to you.

6. This warranty gives you specific legal rights, and you may also have other rights which vary from state to state.

7. BEFORE REQUESTING SERVICE, please review the instruction booklet to insure proper installation and correct customer control adjustment. If the problem persists, contact your nearest MITSUBISHI Dealer for the name(s) of authorized MITSUBISHI Service Center(s). If you are unable to obtain this information, please call 800-332-2119, or write us at the address below.

MITSUBISHI DIGITAL ELECTRONICS AMERICA, INC.
9351 Jeronimo Road
Irvine, CA 92618-1904

MITSUBISHI

RETAIN THIS PORTION FOR YOUR RECORDS

SERIAL NUMBER _____
MODEL NUMBER _____

DEALER NAME _____

STREET ADDRESS _____ ZIP _____

PHONE NUMBER _____ PURCHASE DATE _____

MITSUBISHI ELECTRIC
DIGITAL TELEVISIONS™

If you have questions that cannot be answered from this book, please call our Consumer Relations advisors at (800) 332-2119 or send an email to: MDEAservice@mdea.com

To order replacement remote controls or an Owner's Guide, please call our Parts Department at (800) 553-7278 or contact us through our web site at: www.Mitsubishi-tv.com

©2003 Mitsubishi Digital Electronics America, Inc.

Written and Printed in the U.S.A.

871D404B10