myprojectorlamps.com

The most trusted, dependable name in projector lamp sales.

http://www.myprojectorlamps.com

http://www.myprojectorlamps.ca

http://www.myprojectorlamps.eu

The following projector manual has not been modified or altered in any way.

MITSUBISHI ELECTRIC

HIGH-DEFINITION TELEVISION BASIC OWNER'S GUIDE

MODELS

C9 Series
737 Series
837 Series

This manual provides basic connection, setup, and operating instructions. Please visit our website at www. mitsubishi-tv.com to view or download a detailed owner's guide that fully describes the features of this TV.

- For questions:
  - » Visit our website at www.mitsubishi-tv.com.
  - » E-mail us at MDEAservice@mdea.com.
  - » Call Consumer Relations at 800-332-2119.
- For information on **System Reset**, please see the back cover.
- To order replacement or additional remote controls or lamp cartridges, visit our website at www.mitsuparts.com or call 800-553-7278.

  837 Series. IR emitter cables are available for purchase from Mitsubishi. Request either part number 242D483020 (two-ended cable) or part number 299P254020 (four-ended cable).

ENERGY STAR

PICTURE BY DLP TEXAS INSTRUMENTS

HDMI™ HIGH-DEFINITION MULTIMEDIA INTERFACE

3D READY

6COLOR PROCESSOR

NET Command WITH IR LEARNING

CAUTION

RISK OF ELECTRIC SHOCK DO NOT OPEN

CAUTION: TO REDUCE THE RISK OF ELECTRIC SHOCK, DO NOT REMOVE COVER (OR BACK). NO USER SERVICEABLE PARTS INSIDE. REFER SERVICING TO QUALIFIED SERVICE PERSONNEL.

The lightning flash with arrowhead symbol within an equilateral triangle is intended to alert the user of the presence of uninsulated "dangerous voltage" within the product's enclosure that may be of sufficient magnitude to constitute a risk of electric shock to persons.

The exclamation point within an equilateral triangle is intended to alert the user to the presence of important operating and maintenance (servicing) instructions in the literature accompanying the product.

MAINS DISCONNECTION: The mains plug is used as the disconnect device. The disconnect device shall remain readily operable.

Stand Requirement

CAUTION: Use these Mitsubishi TV models only with the Mitsubishi stand models shown here. Other stands can result in instability and possibly cause injury.

TV Model	Stand Model
WD-60C9, WD-65C9 WD-60737, WD-65737 WD-65837	MB-S60/65A
WD-73C9 WD-73737 WD-73837	MB-S73A

82-inch TVs: Mitsubishi does not design, manufacture, or sell matching bases for 82-inch televisions (WD-82737, WD-82837). When selecting a stand, base, or other furniture to support the TV, please make sure it is designed with the appropriate dimensions for stability and to support the TV's total weight as well as the weight of any additional equipment you plan to store.

TV WEIGHT: This TV is heavy! Exercise extreme care when lifting or moving it. Lift or move the TV with a minimum of two adults. To prevent damage to the TV, avoid jarring or moving it while it is turned on. Always power off your TV, unplug the power cord, and disconnect all cables before moving it.

WARNING: To reduce the risk of fire or electric shock, do not expose this apparatus to rain or moisture.

WARNING: This product contains chemicals known to the State of California to cause cancer and/or birth defects or other reproductive harm.

FCC Declaration of Conformity

Product:	Projection Television Receiver
Models:	WD-60C9, WD-65C9, WD-73C9
	WD-60737, WD-65737, WD-73737, WD-82737
	WD-65837, WD-73837, WD-82837
Responsible Party:	Mitsubishi Digital Electronics America, Inc. 9351 Jeronimo Road Irvine, CA 92618-1904
Telephone:	(800) 332-2119

This device complies with Part 15 of the FCC Rules. Operation is subject to the following two conditions:

(1) This device may not cause harmful interference, and

(2) This device must accept any interference received, including interference that may cause undesired operation.

Note: This equipment has been tested and found to comply with the limits for a Class B digital device, pursuant to part 15 of the FCC Rules. These limits are designed to provide reasonable protection against harmful interference in a residential installation. This equipment generates, uses and can radiate radio frequency energy and, if not installed and used in accordance with the instructions, may cause harmful interference to radio communications. However, there is no guarantee that interference will not occur in a particular installation. If this equipment does cause harmful interference to radio or television reception, which can be determined by turning the equipment off and on, the user is encouraged to try to correct the interference by one or more of the following measures:

» Reorient or relocate the receiving antenna.

» Increase the separation between the equipment and the receiver.

» Connect the equipment into an outlet on a circuit different from that to which the receiver is connected.

» Consult the dealer or an experienced radio/TV technician for help.

Changes or modifications not expressly approved by Mitsubishi could cause harmful interference and would void the user's authority to operate this equipment.

ENERGY STAR® Compliance

This TV meets ENERGY STAR® efficiency standards in all operating modes.

Contents

Important Safety Instructions 4

Remote Control 5

TV Connector Panel Diagrams 6

Connector Performance 6

Connecting Devices

Connecting with HDMI or DVI 7
Connecting with Composite Video 7
Connecting with Component Video 7
Connecting Antenna or Cable without a Box 8
Recording to a Device from Antenna or Cable without a Box 8
Connecting A/V Receiver for TV's Audio Output 8
Connecting A/V Receiver for TV Video and Audio Output 8

Customizing Device Setup

Auto Device Discovery Feature 9
Device Type and Activity 9
Selecting a Source to Watch 9

TV Channel Setup

Memorizing Channels 10
Ch annelView™ Channel Listings 10
Using ChannelView™ 10

TV Menus

Menu Navigation 11
Picture and Sound Settings 11
Closed-Caption Settings 14
Setup of TV Features 14
Input Management 16
Controlling TV Usage 17

USB Media Player Menu

Play a Slide Show or Playlist 18
Thumbnail and Playlist Menus 18
Setup 18

3D Video

Initial Setup 19
Watching 3D Video 19
To Watch Regular (non-3D) Video 19

Troubleshooting 20

Lamp-Cartridge Replacement and Cleaning 24

Warranty, Trademarks, and Licenses 26

For Your Records

Record the model number, serial number, and purchase date of your TV. The model and serial numbers are on the back of the TV. Refer to this page when requesting assistance with the TV.

MODEL NUMBER _____

SERIAL NUMBER _____

PURCHASE DATE _____

RETAILER NAME _____

LOCATION _____

_____

Lamp Replacement

For lamp-replacement instructions, see the Owner's Guide.

To Order a Replacement Lamp Under Warranty
Call (800) 553-7278. Please have model number, serial number, and TV purchase date available.

Important: All lamps replaced under warranty must be returned to Mitsubishi where they will be inspected for defect verification.

To Purchase a Replacement Lamp After Warranty
Visit our website at www.mitsuparts.com or call (800) 553-7278. Order new lamp part number 915B403001

Internal Fans

Internal cooling fans maintain proper operating temperatures inside the TV. It is normal to hear the fans when you first turn on the TV, during quiet scenes while viewing the TV, and for a short time after shutting off the TV. You may notice louder fan noise about 30 seconds after shutting off the TV and while using the **Bright** Lamp Mode.

Choose a Location for your TV.

- Allow at least four inches of space on all sides of the TV to help prevent overheating. Overheating may cause premature failure of the TV as well as shortened lamp life.
- Avoid locations where light may reflect off the screen.
- See the stand requirements at the beginning of this book.

Important Safety Instructions

Please read the following safeguards for your TV and retain for future reference. Always follow all warnings and instructions marked on the television.

1) Read these instructions.
2) Keep these instructions.
3) Heed all warnings.
4) Follow all instructions.
5) Do not use this apparatus near water.
6) Clean only with dry cloth.
7) Do not block any ventilation openings. Install in accordance with the manufacturer's instructions.
8) Do not install near any heat sources such as radiators, heat registers, stoves, or other apparatus (including amplifiers) that produce heat.
9) Do not defeat the safety purpose of the polarized or grounding-type plug. A polarized plug has two blades with one wider than the other. A grounding type plug has two blades and a third grounding prong. The wide blade or the third prong are provided for your safety. If the provided plug does not fit into your outlet, consult an electrician for replacement of the obsolete outlet.
10) Protect the power cord from being walked on or pinched particularly at plugs, convenience receptacles, and the point where they exit from the apparatus.
11) Only use attachments/accessories specified by the manufacturer.
12) Use only with the cart, stand, tripod, bracket, or table specified by the manufacturer, or sold with the apparatus. When a cart is used, use caution when moving the cart/apparatus combination to avoid injury from tip-over.

13) Unplug this apparatus during lightning storms or when unused for long periods of time.
14) Refer all servicing to qualified service personnel. Servicing is required when the apparatus has been damaged in any way, such as power-supply cord or plug is damaged, liquid has been spilled or objects have fallen into the apparatus, the apparatus has been exposed to rain or moisture, does not operate normally, or has been dropped.

Outdoor Antenna Grounding

If an outside antenna or cable system is connected to the TV, be sure the antenna or cable system is grounded so as to provide some protection against voltage surges and built-up static charges.

EXAMPLE OF ANTENNA GROUNDING

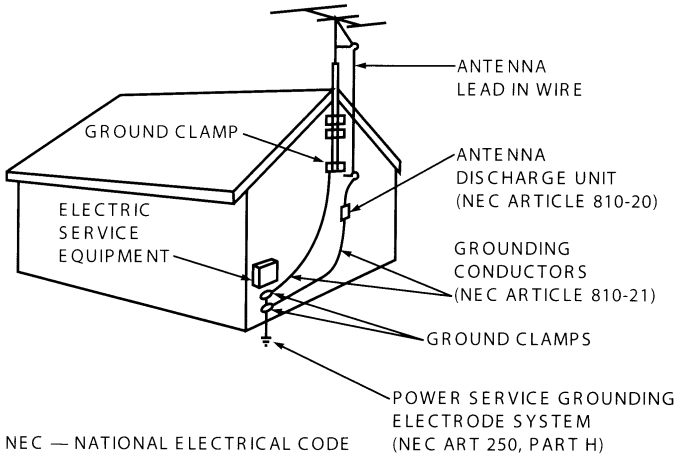

Replacement Parts

When replacement parts are required, be sure the service technician has used replacement parts specified by the manufacturer or have the same characteristics as the original part. Unauthorized substitutions may result in fire, electric shock or other hazards.

Installation Notes

Custom cabinet installation must allow for proper air circulation around the television.

NOTE TO CATV SYSTEM INSTALLER: ARTICLE 820-40 OF THE NEC THAT PROVIDES GUIDELINES FOR THE PROPER GROUNDING AND, IN PARTICULAR, SPECIFIES THAT THE CABLE GROUND SHALL BE CONNECTED TO THE GROUNDING SYSTEM OF THE BUILDING, AS CLOSE TO THE POINT OF CABLE ENTRY AS PRACTICAL.

Remote Control

If You Power Off the TV by Mistake

1. Press **POWER** again within about 60 seconds, to have the TV come back on immediately.
2. If the status indicator starts fast green blinking (about 60 seconds after you shut off power), wait a few moments for the status indicator to stop blinking and press power to turn the TV on again.

Features and specifications described in this owner's guide are subject to change without notice.

TV Connector Panel Diagrams

Note: The number of inputs/outputs shown TV Panel diagram may vary from those on purchased model.

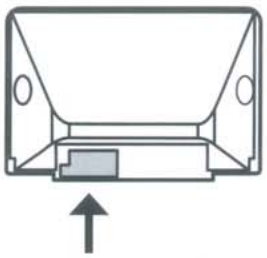

Main connector panel

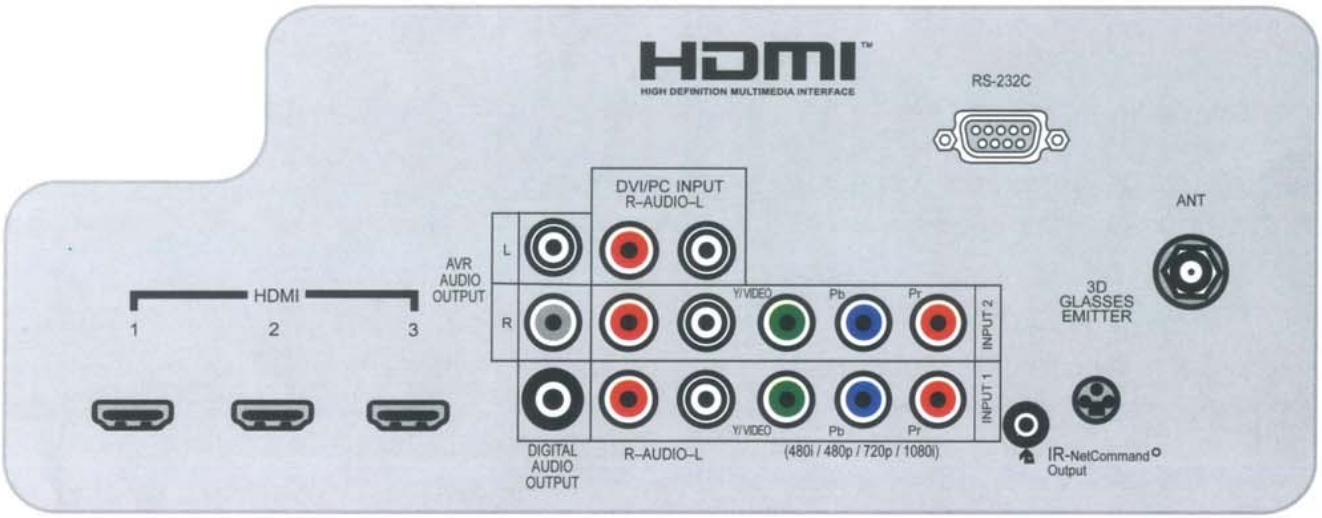

Side connector panel

Note: USB and HDMI 4 are available for 837 series only.

Connector Performance

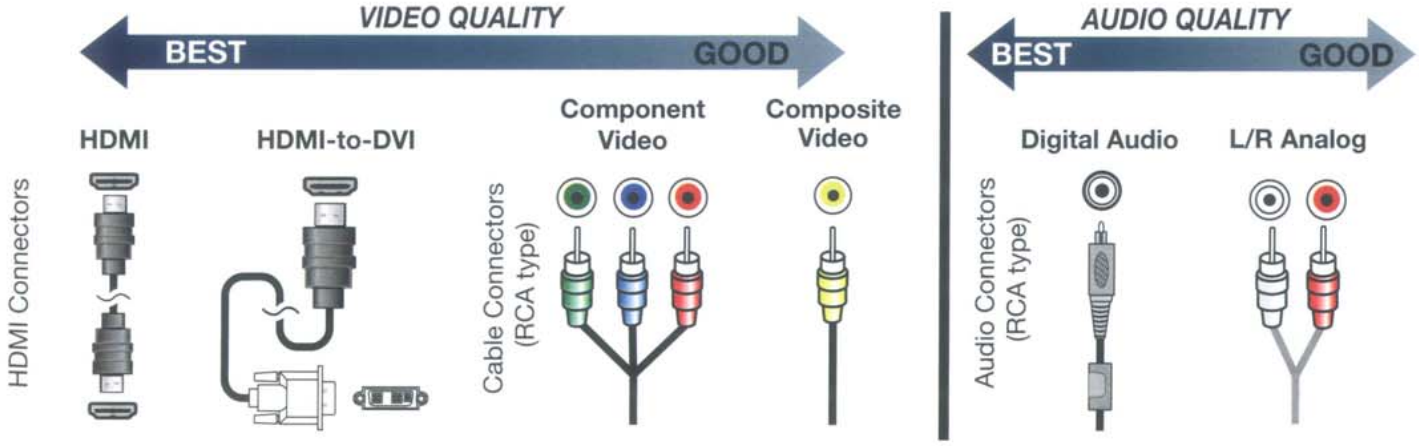

Connecting Devices

Connecting with HDMI or DVI

Required:

1. HDMI-to-HDMI cable ***OR***
2. a. DVI-to-HDMI cable ***AND***
   b. Left/Right Analog Audio cable

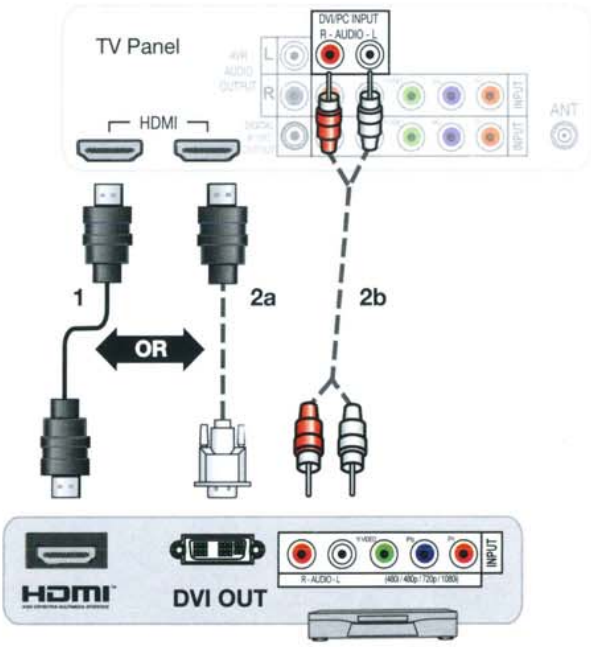

Connecting with Composite Video

VCR or other device with composite video output
Required:

1. Composite video cable
2. Left/Right Analog Audio cable

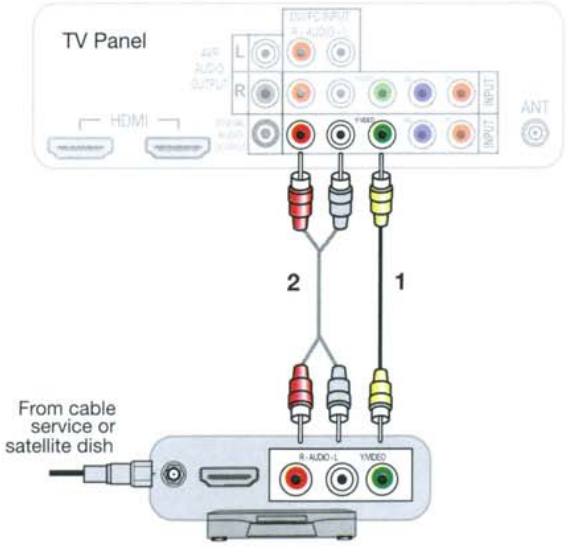

Connecting with Component Video

Required:

1. Component video cables
2. Left/Right Analog Audio cable.

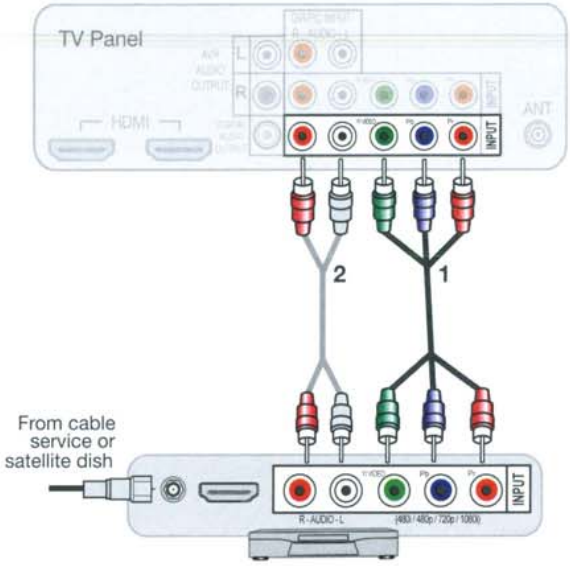

Connecting Antenna or Cable without a Box

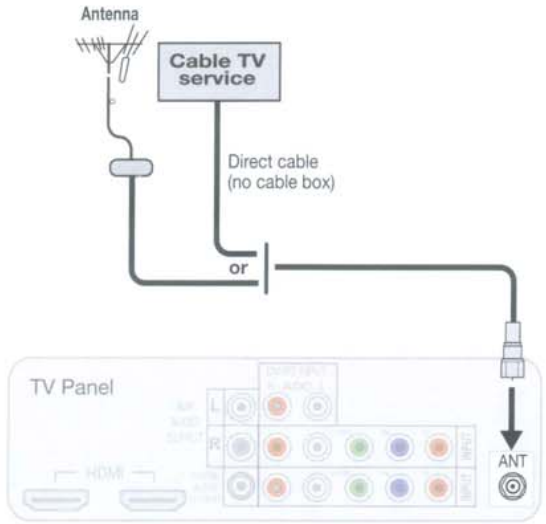

Mitsubishi recommends using coaxial antenna cable instead of flat twin lead antenna wires for better performance.

Recording to a Device from Antenna or Cable without a Box

Required:
1. Two-way RF splitter
2. Two coaxial cables
3. Right and left analog audio cables
4. Composite video cable

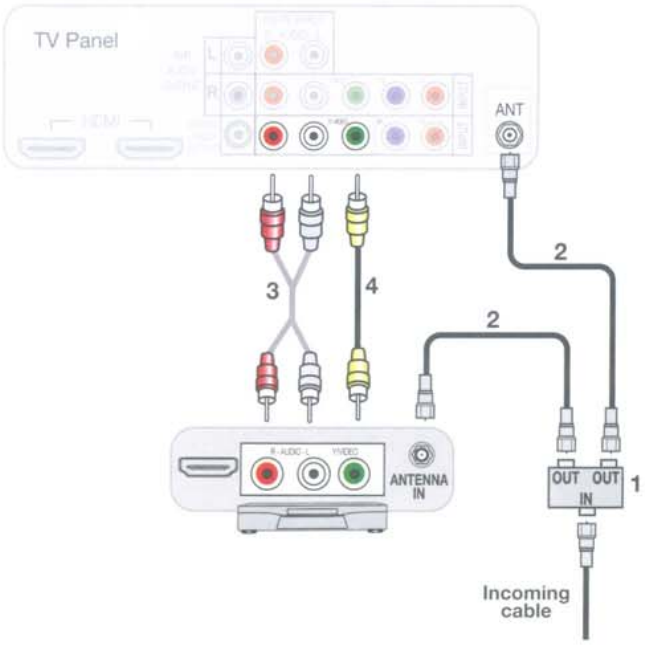

Connecting A/V Receiver for TV's Audio Output

Required:
1. Digital audio cable ***OR***
2. Analog stereo audio cables

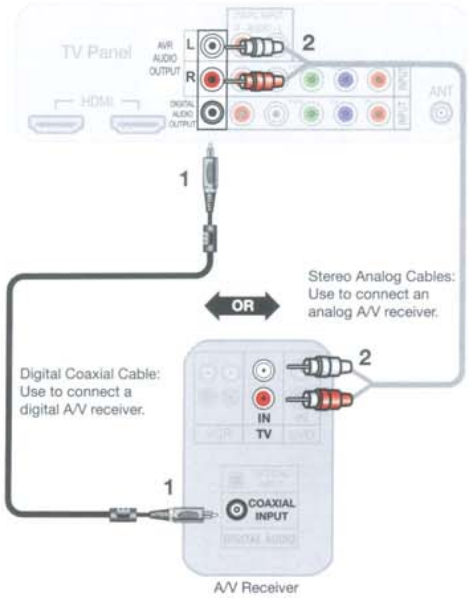

Note:

- If the audio is missing from the digital audio connection, it might be due to the copy-protected signal. Use the analog audio connection.
- Check the A/V receiver's Owner's Guide for information concerning use of the digital input and switching between digital sound and analog stereo sound from the TV.

Connecting A/V Receiver for TV Video and Audio Output

Required: HDMI-to-HDMI cable

Note: This setup allows you to use NetCommand-controlled audio and video switching over the HDMI cable.

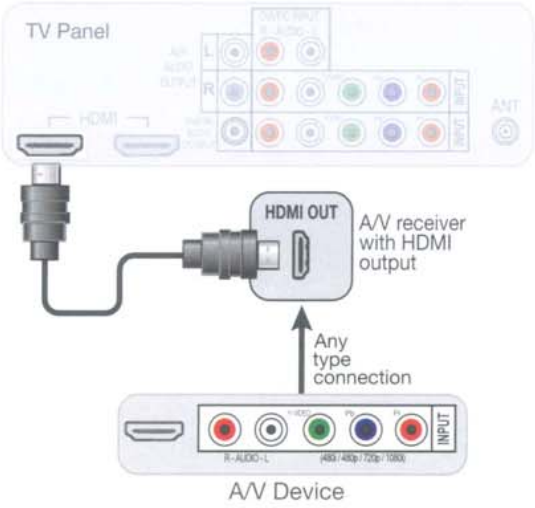

Customizing Device Setup

Auto Device Discovery Feature

TV's Easy Connect ™ Automatic Device Discovery detects most connections automatically.

1. Connect your device to the TV.
2. TV displays the 'New Device Found' menu when the connection is detected automatically.

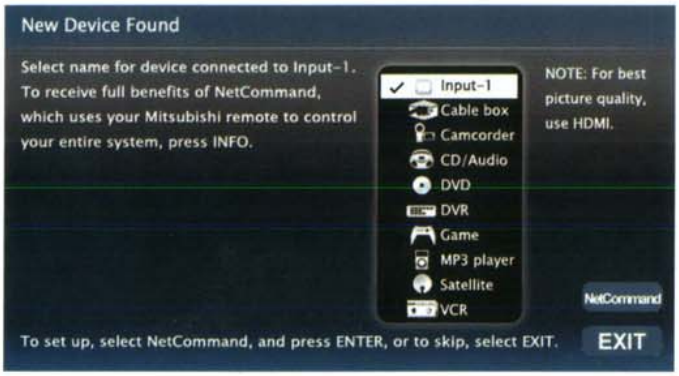

3. To ensure best detection, power on HDMI devices before connection.
4. Specify the Device Type from the menu.
   a. For DVD or GAME, additional menu pops up to specify following detail:
      DVD: DVD, DVD-2, or Blu-Ray
      GAME: Game, PS, Wii or XBox
   b. The Activity menu is customized based on the device type. Refer to next section for details.

Device Type and Activity

Following table summarizes the available activities for each device type.

Activity / Device Type	Watch TV	Watch Movie	View Photos	Play Game	Listen Music
AV Receiver	X				X
Blu-Ray		X	X		X
Cable Box	X				
Camcorder		X			
CD/Audio					X
DVD		X			X
DVD2		X			X
DVR	X				
Game				X	
MP3 Player		X			X
PC	X	X	X	X	X
PS		X	X	X	
Satellite	X				
VCR		X			
Wii		X		X	
Xbox		X		X	
USB			X		X

To modify the default activity setting, use the Activity sub-menu in the Inputs menu. Refer to TV Menus section for further detail.

Selecting a Source to Watch

1. Press (ACTIVITY) key.

The blue rectangle indicates the current source while navigating to other devices. If no device is connected, the only Activity available is "Watch TV."

2. Press ▲▼ and ◀ ▶ to highlight a source.
3. Press (ENTER) key to switch to the source.

TV Channel Setup

Memorizing Channels

Use the Scan option in the Channel Management menu to locate and memorize all of the local channels from an antenna or from direct cable service (no cable box).

1. Press (MENU) key to display menu.
2. Press ▲▼ and ◀ ▶ to open the ***Channel*** menu.

3. Select ***Ant Air*** if connected to an over-the-air antenna. Select ***Ant Cable*** for direct cable.
4. Highlight Scan and press (ENTER). Wait for the completion message before continuing.
5. To stop Channel Memorization, press (CANCEL) key.

Customize the Channel List using Edit Function. Channels may be added or deleted from the memory.

ChannelView™ Channel Listings

ChannelView™ shows memorized channels on the **ANT** input. It displays channel names and program information for digital channels as sent by broadcasters or your local cable service provider (information may be incomplete). No program information is displayed for analog channels.

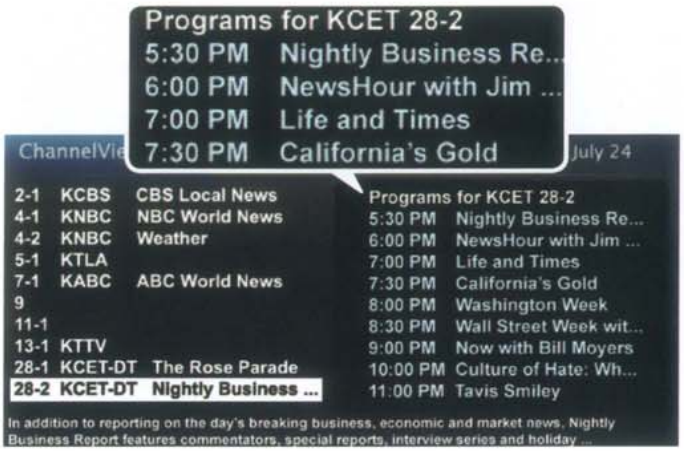

ChannelView. Programs for the tuned channel are listed on the right side of screen.

Note: You must set the TV Clock to receive ChannelView listings.

Using ChannelView™

Feature	Instructions
Receive updates for a digital channel.	Tune to the channel.
See ChannelView listings from the **ANT** input.	**GUIDE**
Close ChannelView	**GUIDE**
Scan channels one by one.	Hold ▲ or ▼
Scan channels quickly.	Hold **PAGE UP/PAGE DN**
Jump to listings for a specific channel.	**1.** Enter the channel number. **2.** Press **ENTER**.
See more of the program description for the current channel (if available).	**INFO**
Tune to the highlighted channel.	**ENTER**

TV Menus

Menu Navigation

MENU	Displays or clears the main menu.
BACK	• Moves up one menu level. • Clears the current menu.
ENTER	• Navigation into a submenu • Selects an item.
▲▼	Move the highlight within menus.
◀ ▶	Make adjustments in some menus.

Look for the key guide at the bottom of each menu. →

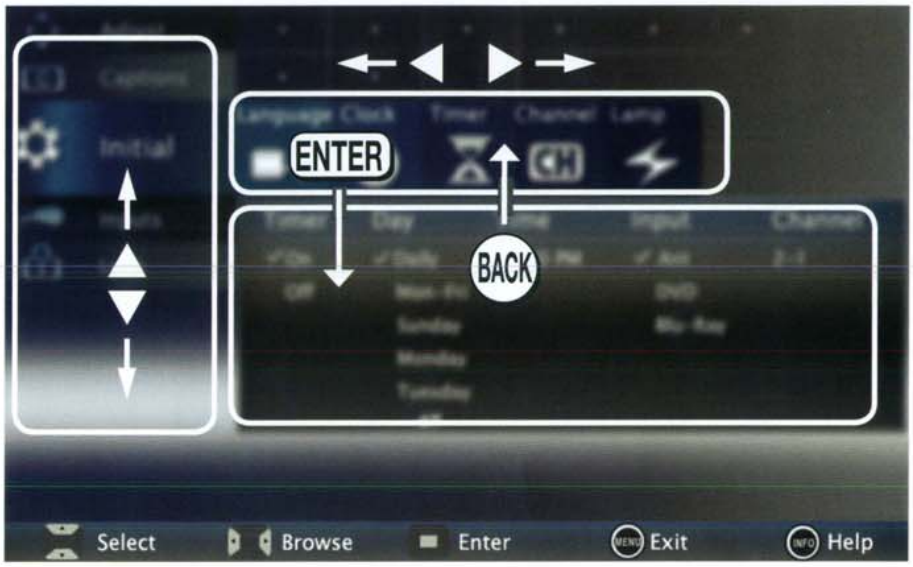

Adjust

Picture and Sound Settings

Picture Mode	To get the best image under different viewing conditions. Options are: Brilliant: Bright light Bright: Daytime viewing Natural: Night time viewing Game: Available for Game or PC input only
Video Noise	Reduces minor noise (graininess) in the picture.
Sharp Edge	Add special edge enhancements to make image appear sharper. (Not available for all models).
Deep-Field Imager	Enhance black levels in portions of the screen to provide strong contrast (Not available for all models).

Adjust continued

Audio

Speakers	Displayed only if an A/V receiver or headphone connection has been detected:	
	TV:	Turns on the internal TV speakers.
	A/V Receiver:	Audio available from an A/V Receiver.
	Headphones:	Audio available from headphones.
Sound Mode	**Stereo:**	No special audio effects from the TV speakers.
	Surround:	Modifies audio from the TV speakers.
Listen To	Available for analog channels from **ANT** only.	
	Mono:	Reduces background noise.
	Stereo:	The TV plays stereo in stereo and mono broadcsts in mono.
	SAP (Second Audio Program):	Selects an additional sound track not audible during nor TV viewing.
Language	Selects the current language for a digital program from **ANT.**	
Level Sound	**On, Off:**	Reduces differences in sound volume between programming segments, such as between regular broadcast programs and commercials.

Reset

Resets audio and picture adjustments for the current input. Highlight the **Reset** icon and press **ENTER.**

Global

Video Mute	Displays a solid-colored background when there is no video signal.
Audio Screensaver	Displays a random pattern while playing an audio-only device named **CD/Audio** or **MP3 Player.**
Film Mode	**480i and 1080i signals only.** In **Auto**, the TV applies film-decoding correction to movies filmed at 24 frames per second.
Smooth 120Hz	Reduces motion blur in action scenes.
Blue Glow	Select **On** to see blue accent lighting. (837 Series only.)
Test Picture	Displays a test picture for use by TV servicers.

Adjust continued

PerfectColor	Sliders adjust the saturation (intensity) of six colors for the current input.
PerfecTint	Sliders sdjusts six hues for the current input (some models). To switch between PerfectColor™ and PerfecTint™ adjustments, highlight **Adjust Mode** and press ◀ ▶. (837 Series only.)
Advanced Picture	Technical picture adjustments for use by a professional installer.

3D Mode	Select **On** setting to enable 3D feature.
Glasses L-R	**Standard:** Normal setting. **Reverse:** If the standard setting looks incorrect (e.g. objects appear to be moving in instead of out, or side by side), use the Reverse setting.

- To display 3D images, Mitsubishi Home Theater DLP TVs require that source devices support checkerboard display formats for 3D gaming or 3D cinema content.
- A 3D standard format does not currently exist for Blu-Ray or DVD prepackaged media.
- Future 3D standards may be incompatible with Mitsubishi Home Theater DLPs.
- Please visit mitsubishi-tv.com for updates and information.

Captions

Closed-Caption Settings

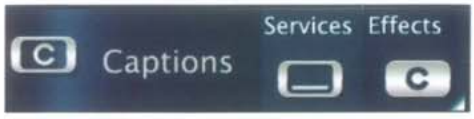

Services

- Provides choices and separate on/off controls for digital and analog captions.
- Selects background color for analog captions.

Effects

Selects settings for the appearance of digital closed captions.

Initial

Setup of TV Features

Language

Choose either English or Spanish for TV menus.

Clock

- Use this menu to set the TV clock.
- Choose the **DST** (Daylight Savings Time) setting for your area.

Initial continued

Use this menu to set a day and time for the TV to power on automatically.

Select the input and channel to be used at Power-On.

Channel Scan searches for channels and adds them to memory.

Adding/Deleting Channels

- Check mark indicates memorized channels.
- Select and press ENTER to add / delete the channel from the memory.

Standard	Suitable for most viewing conditions and the most energy efficient mode.
Bright	Use **Bright** in brightly lit rooms.

Inputs

Input Management

- Assign or change names of inputs appearing in the ***Activity*** menu.
- Turn the **Ant** input **On/Off** (to display/hide in the ***Activity*** menu).
- Delete unused HDMI inputs from the ***Activity*** menu.

For complete setup instructions, see the owner's guide on the web.

(837 Series only.)

Select **On** or **Off** to enable or disable the TV's control of a CEC-enabled device. See the TV owner's guide for use of this feature.

- Customize the Activity menu choices for the current viewing input.
- Highlight the activity name and press ENTER.

Lock

Controlling TV Usage

This feature restricts the access according to the U.S. based program ratings, the time of day or by the channels. Restricting the access using the non-U.S. based ratings (Alternate Rating System) can be setup from the 'Other' submenu.

- To setup the restriction or to watch TV during the restricted condition, pass code is required.
- Pass code menu is prompted whenever Lock is selected on the main menu.

Setting a Pass Code

- Input four-digit pass code using the number keys on the remote control.
- Press CANCEL to delete a number and move back one space.
- Press MENU or BACK to close the menu without setting a pass code.
- Press ENTER to set the pass code.
- If you forget the pass code: press the number 9 and LAST key on the remote at the same time.

Resetting a Pass Code

The old pass code is deleted when entering the Lock menu, and prompts you to enter a new pass code.

Lock by Program Ratings:

- Restricts access to the TV using U.S. ratings sent by the broadcasters.
- Lock applies only to ANT and composite jacks. Some signals do not contain rating information and unable to lock.
- To lock for 24 hours, set the same time for Start Time and Stop Time.

Lock by Time:

- Blocks all use of the TV during the specified time period.
- Requires pass code to view during the locked time.

Lock Control Panel:

- Disables the buttons on the TV's control panel.
- Press and hold ACTIVITY button from the panel for about 10 seconds to unlock if the remote control is not available.

Lock by Other Program Ratings:

- Restricts access using non-U.S. based ratings sent by broadcasters.
- Grayed out if the Other rating is not detected in the broadcasted signal.

Note: Other rating locks apply only to digital channels and signals received on the ANT.

USB Media Player Menu

- ***837 Series only.***
- The TV can display photo or music files from a USB device.
- Photos must be in JPEG format and music files in wma format.

1. Connect your USB card reader or USB drive to the TV's USB port located at the side panel.

   Side Panel

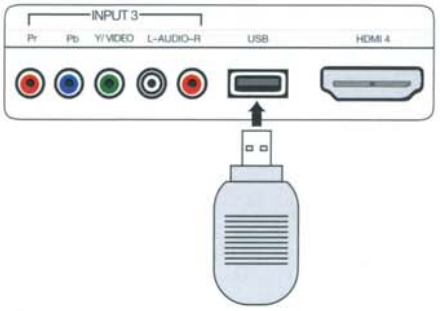

Note: HDMI 4 not available on all models.

2. The TV ignores all commands while reading files. Wait for icons to appear in the ***USB Media Player*** menu before activating menu options.
   Large files or high-capacity storage devices may take a long time to display.

Play a Slideshow or Playlist

Starts the slide show or starts playing music.

▶ or ENTER	Plays the slide show or playlist.
GUIDE	Rotates an image clockwise in 90° increments
INFO	Displays slide name or track name. Press **BACK** to clear.
⏸	Pauses a slide show or track
■	Stops a slide show or track.
◀◀ ▶▶	Displays the previous or next slide or track.

IMPORTANT

Always stop playback with ■ (STOP) or change to a different TV input before disconnecting your USB device.

Some pictures may not show on the TV.

Back up the data on your USB drive before connecting it to the TV. Mitsubishi is not responsible for any file damage or data loss.

Thumbnail and Playlist Menus

Displays picture thumbnails or a list of music files.

▲▼◀▶	Moves the highlight from item to item.
GUIDE	Rotates a thumbnail clockwise in 90° increments (thumbnail only).
▶ or ENTER	Plays the slide show or playlist starting with the highlighted item.
▶▶	Selects the last item on the current page.
◀◀	Selects the first item on the current page.
PAGE UP/DN	Displays the next or previous page of items.

Setup

Displays the USB Media Setup menu.

Display	You have the option to play music with the slide show (Slideshow + Music), Slideshow or Music only.
Slideshow	Select Auto or Manual for the slide show
For automatic advance only:	
Interval	Select the time interval for display of each slide. The actual interval time may vary as it may take longer for larger files.
Frequency	Select the number of times (frequency) to play the complete slide show and/or playlist: **Once, Twice, or Continuous.**

Notes on Using the USB Port

- Some images opened and reserved on a computer may not play back or display in the thumbnail list.
- Some manufacturers' devices may be incompatible with the TV. If the TV is unable to display your photos, you can:
  - » Transfer files to a different USB device.
  - » Use your digital camera's Y/VIDEO composite video output.

3D Video

This section provides Instructions for viewing 3D video using the TV's 3D feature. The 3D options are found in the ***Adjust > 3D Mode*** menu.

Initial Setup

1. Check if your HDMI 3D video source device outputs a 1080p 60 Hz signal. This information will be needed when you assign an input name in the ***New Device Found*** screen.
2. If your 3D glasses came with an emitter box, connect the emitter box to the **3D GLASSES EMITTER** jack on the back of the TV.

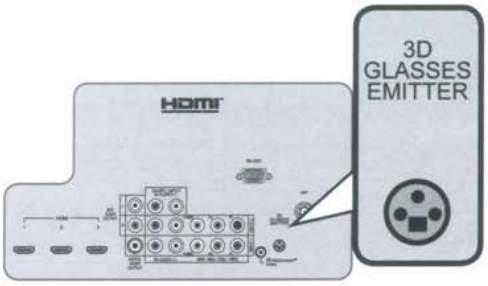

3. Power on the TV and the source device.
4. Connect the source device to the TV's HDMI input.
5. When the ***New Device Found*** screen displays, name the input according to the table below.

   The signal type and choice of name are important because the TV will process the video signal differently depending on the name you assign. If your source device is a Blu-Ray disc or a game console, the signal must be 1080p at 60 Hz.

Source of 3D Video	Type of 3D Video Signal	Assign Name
Computer	Recommended: 1080p 60 Hz (1920 X 1080). The image will fill the TV screen. Other 60-Hz computer video signals compatible with the TV will display with black bars.	**PC**
Any other 3D video source	To see 3D video, signal must be 1080p 60 Hz	Any other name

6. Press **BACK** to close the ***New Device Found*** screen, or to change the name in the ***Input>Name*** sub-menu.

Watching 3D Video

1. Press **ACTIVITY**.
2. Highlight the icon for the 3D video input and press **ENTER**.
3. Press **MENU** and select the ***Adjust > 3D Mode*** menu.
4. Set **3D Mode** to **On**. The **On** setting will be memorized for the current activity/input combination when you exit this menu.

Use the Adjust > 3D Mode menu to enable 3D video viewing.

5. Press **BACK** to close the menu.
6. If the image does not appear correct, open the ***Adjust > 3D Mode*** menu again and set **Glasses L-R** to **Reverse** to reflect the correct polarity.

To Watch Regular (non-3D) Video

The **3D Mode** setting is memorized for each activity/input combination. When you want to watch non-3D video on the input selected above:

- Press **ACTIVITY** and select a different activity in which the input is selectable.
- Open the ***Adjust > 3D Mode*** menu and set **3D Mode** to **Off**.

Troubleshooting

General TV Operation

	Symptom	Remarks
1.	A fan is running even while the TV is powered off.	The room is too warm. When the TV is off, internal components continue to draw power and must be cooled by the fan.
2.	The fan gets louder after the TV is shut off.	Normal operation. The fan speeds up to cool the lamp quickly after the TV has been shut off.
3.	The TV remote control does not work.	• Check that the batteries are fresh and installed correctly. • Check that the control mode on the remote is set to TV. • Be no more than 20 feet from the TV when using the remote control. • Program the remote control to operate the TV or other device. • Reset the remote control.
4.	When I try to use the remote control, the POWER key blinks five times.	Replace the batteries.
5.	TV does not respond to the remote control or to control-panel buttons and TV will not power on or off.	Unplug the AC power cord for 10 seconds. Press and hold the POWER button on the control panel for 10 seconds to perform system reset.
6.	When a device is selected from the Activity menu, the screen is blue or black (no signal source).	• Make sure the selected device is turned on. • Begin play of the device.
7.	You have forgotten your Lock menu pass code.	When prompted for the pass code, press the number 9 and (LAST) keys on the TV remote control at the same time. This process temporarily unlocks the TV.
8.	Rating restrictions are not working.	Open the Lock > Parental Lock menu and: • Verify that the ratings locks are active. • Check the Lock Time/Unlock Time to check if rating restrictions are disabled. • Rating restrictions apply only to content on the ANT input.
9.	On-screen displays appear each time you change a function.	Normal TV operation.
10.	A warning message appeared on screen stating, "TV will shut down in a few seconds. Please check if the air flow is blocked."	• Internal TV temperature has exceeded proper levels. Cool the room. • The TV has overheated. Clear blocked air vents and ensure at least four inches of clearance on all sides of the TV. • Clean the air filter on the lamp cartridge.
11.	I have turned on CEC for my HDMI devices but control is erratic and I wish to disable it.	• First turn off the TV's HDMI control for the specific device. Open the Inputs > HDMI Control menu, select the device, select Off. • Disable CEC on the device itself. See the device's instructions. • If the problem persists, do the following: 1. Disconnect the device from the TV. 2. Reconnect the device to the TV and Auto Input Sensing will recognize the device with CEC disabled.

TV Channels

	Symptom	Remarks
1.	The TV takes several seconds to respond to channel changes.	• It is normal for digital channels to take longer to tune in. • Press ENTER after entering a channel number to avoid delays. • Use a 4-digit number for an over-the-air digital channel. • Use a 6-digit number for digital cable channels if your cable service is able to recognize 6-digit channel numbers.
2.	You cannot access a channel.	• Use number keys instead of CHANNEL Up/Down. • Be sure the channel you want to view is in memory. • Check that the TV is switched to the correct device or antenna for that channel by pressing the ACTIVITY key. • Make sure the Lock > Parent menu lock is set to Off. • If you cannot tune to a virtual digital channel even though the TV has already memorized digital channels, tune to the physical channel number used by the broadcaster. The virtual channel will then be automatically added to memory. • You may be trying to tune to an analog channel that is no longer broadcasting.
3.	When ChannelView list is displayed, information appears incomplete	• Program information is displayed only for channels tuned during the most recent power-on. • Available information is sent from the broadcaster or cable provider. No other data is available. • Make sure the TV clock is set correctly. • Press INFO to update the display.

TV Power On/Off

	Symptom	Remarks
1.	TV takes an excessively long time to power on.	When powered on, the TV needs time to boot up, just as a computer does. Also, the TV's lamp requires a few moments to heat up to full brightness.
2.	You cannot program the TV to turn on automatically (Timer function).	• The TV may be locked. • The clock may not be set.
3.	TV turned itself off and the light on the front panel started to blink.	• Momentary power fluctuation caused the TV to turn off to prevent damage. Power on the TV and wait for the lamp to illuminate. • If the TV does not stay on, press the POWER button on the control panel for ten seconds to perform System Reset. If this happens frequently, obtain an AC line power conditioner/surge protector. • An unusual digital signal may have been received, triggering a protection circuit. Power on the TV.
4.	TV will not power off.	Press the POWER button on the control panel for about ten seconds to perform System Reset.

Picture		
	Symptom	**Remarks**
1.	Picture does not look like a high-definition picture.	Not all signals are high-definition signals. To receive high-definition programming from your cable or satellite provider, you must subscribe to the provider's high-definition service. Some over-the-air broadcasts are in high-definition and can be received with a high-quality antenna suited to your location.
2.	TV has sound but no picture.	Press and hold the POWER button on the control panel for 10 seconds to perform System Reset.
3.	Picture has become dimmer.	• The lamp is nearing the end of its life. Order a new lamp. • Adjust picture brightness and contrast to maximum levels. • Change Lamp Energy from Standard to Bright.
4.	There is a large black or gray rectangle on the screen.	The TV's analog closed captioning has been set to "text" mode in the Captions menu. Turn off because there is no text information being broadcast.
5.	You cannot view a picture when playing a VHS tape.	Check your VCR's owner's guide for further troubleshooting.
6.	VCR or DVD player's on-screen menus jitter up and down.	Stop playback. Possible cause: Many VCRs and DVD players provide on-screen menus at only half-resolution that may appear to jitter up and down.
7.	When viewing a stopped VCR, white lines are rolling on the screen.	• Turn off video mute for the VCR. • Begin playing the tape. • Change the VCR input to the antenna input.
8.	A color program appears as a black and white image, or the colors are dim, or the screen is black.	The PerfectColor color balance has been incorrectly set. Reset the PerfectColor balance.
9.	Picture from an HDMI input is noisy (poor quality).	Upgrade a Category 1 (unmarked) HDMI cable to a Category 2 high-speed HDMI cable.
10.	The image from a computer appears distorted when viewed on the TV.	Normal TV operation. The TV does not correct distortion in the picture from a computer because the correction process may cause the edges of the image to be cut off.

Sound

	Symptom	Remarks
1.	There is no sound even when the volume is turned up.	• Check if the MUTE button is on. • The TV's "Listen to:" setting may be set to SAP (analog program from the ANT input). • Check that the Speakers option is set to TV to hear sound from the TV speakers. Sound may be being sent to one of the audio outputs for an A/V receiver or headphones. • If using an A/V receiver, check that the Speakers option is set to AV Receiver to hear sound from the A/V receiver speakers. • Press and hold the POWER button on the control panel for 10 seconds to perform System Reset.
2.	The sound does not match the screen picture.	The TV's "Listen to:" setting may be set to SAP (analog program from the ANT input).
3.	The sound from my A/V receiver does not match the screen picture (I should hear the correct audio from my A/V receiver).	Check that DIGITAL AUDIO OUTPUT and/or AVR AUDIO OUTPUT on TV's back panel is connected to the A/V receiver. Without this connection, devices connected only to the TV (and not the A/V receiver) can be heard only from the TV speakers. Note that this includes the ANT input, a device (such as a camcorder) connected to the front panel, and any other device sending audio to the TV only.
4.	Cannot select an audio-only device; it does not appear in the Activity menu.	Plug an unused video plug into the INPUT 3 **Y/VIDEO** jack to activate Auto Input Sensing and make the audio device selectable in the Activity menu.

Lamp-Cartridge Replacement and Cleaning

CAUTION: If the television is on, press POWER to turn it off. Unplug the television and allow it to cool for at least one hour before attempting to replace the lamp cartridge.

Lamp

The light source for this television is a lamp, which is part of a lamp cartridge assembly. The life of the lamp can vary, based on the lamp itself, the air temperature around the TV while it is operating, the selected lamp mode, and your viewing patterns. Warmer air or poor ventilation shorten the lamp life, as does use of the **Bright** lamp mode and turning the television on and off frequently. Mitsubishi warrants the lamp for one (1) year from the date of original TV purchase at retail.

CAUTION

BURN DANGER! HOT SURFACES INSIDE!

Touch lamp cartridge handle only. Do not touch lamp or lamp cartridge housing. Keep lamp cartridge horizontal during removal. Do not tilt as glass may come out and cause injury. Replace lamp cartridge only with the same part number 915B403001.

WARNING

THE ACCESS PANEL IS PROVIDED WITH AN INTERLOCK TO REDUCE THE RISK OF EXCESSIVE ULTRAVIOLET RADIATION. DO NOT DEFEAT ITS PURPOSE OR ATTEMPT TO SERVICE WITHOUT REMOVING PANEL COMPLETELY.

To Order a New Lamp

To Receive a Replacement Lamp Under Warranty
Call (800) 553-7278. Please have model number, serial number, and TV purchase date available.

Important: All lamps replaced under warranty must be returned to Mitsubishi where they will be inspected for defect verification.

To Purchase a Replacement Lamp After Warranty
Visit our website at www.mitsuparts.com or call (800) 553-7278. Order the following:

Lamp Part Number 915B403001

Lamp-Substitution Alert

MDEA recommends that you use only genuine Replacement Lamp Assemblies purchased directly from Mitsubishi or a Mitsubishi Authorized Dealer or Mitsubishi Authorized Service Center. MDEA advises that replacement lamps obtained separately from the Lamp Cartridge and/or Lamp Assemblies obtained from unauthorized sellers may be incorrect for your television, may not fit or perform properly and may even damage your television. MDEA can not be responsible for the performance, reliability or safety of any replacement lamps that are obtained from unauthorized sources.

WARNING

- Do not remove the lamp cartridge immediately after turning off the television. You may get burned because the lamp is very hot. Allow the television to cool for at least one hour before replacing the lamp cartridge.
- Do not remove the lamp cartridge except when replacing it. Careless treatment can result in injury or fire.
- Do not touch the lamp glass element. It may be very hot and break, causing injuries or burns.
- Be sure not to insert any metal or flammable object into the lamp cartridge opening, as it may cause fire or electrical shock. If a foreign object is inserted into the opening, unplug the AC cord of the TV and contact your dealer for service.
- Install the lamp cartridge securely. Failure to do so may cause a fire.
- Do not touch the lamp glass elements. Oils from your fingers may cause premature lamp failure.

Hg = MERCURY

THE LAMP INSIDE THIS PRODUCT CONTAINS MERCURY AND MUST BE RECYCLED OR DISPOSED OF ACCORDING TO LOCAL, STATE OR FEDERAL LAWS. For disposal or recycling information, please contact your local authorities or the Electronic Industries Alliance at **www.eiae.org**

Lamp-Cartridge Replacement

Removing the Old Lamp Cartridge

1. Turn off TV power and allow the lamp to cool for at least one hour before proceeding.
2. After the lamp has cooled, remove the cover of the lamp compartment, located on the back of the TV.

   Refer to figures 1 and 2. Use a #2 (large) Phillips screwdriver to loosen the screw securing the cover. Keep the screw and cover for re-installation
3. With a large Phillips screwdriver, loosen the two shiny screws securing the lamp cartridge until they disengage from the mating threads. These are captive screws and cannot be separated from the lamp cartridge.
4. Fully open the bag supplied with the replacement lamp and set the opened bag aside.
5. Gently grasp the handle of the lamp cartridge and pull the old cartridge straight out. See figure 3.

   CAUTION: Do not tilt or rotate the cartridge, as small glass fragments may fall out.
6. Without tilting or putting down the lamp cartridge, insert it into the opened bag. Close the bag while being careful not to let any glass particles fall out.

Installing the New Lamp Cartridge

1. Do not touch the glass parts of the new lamp cartridge. Insert the new cartridge into the TV in the same orientation as the old cartridge. Push on the cartridge housing until it is fully seated.
2. With the screwdriver, gently tighten the two shiny screws. AVOID OVERTIGHTENING!
3. Replace the plastic cover and retaining screws.
4. WASH YOUR HANDS THOROUGHLY, AS THIS LAMP CONTAINS MERCURY.

Disposal of the Old Lamp Cartridge

Lamp under warranty: All lamps replaced under warranty must be returned to Mitsubishi. Use the return shipping label provided and send to Mitsubishi Digital Electronics, America, 625 Braselton Parkway, Suite 200 Braselton, GA 30517.

IMPORTANT: Lamps found to be without defect will be returned and charged back to the sender.

Lamp no longer under warranty: Contact your local authorities or the Electronic Industries Alliance at www.eiae.org for lamp-disposal or recycling instructions. Do not dispose of the old lamp with common trash.

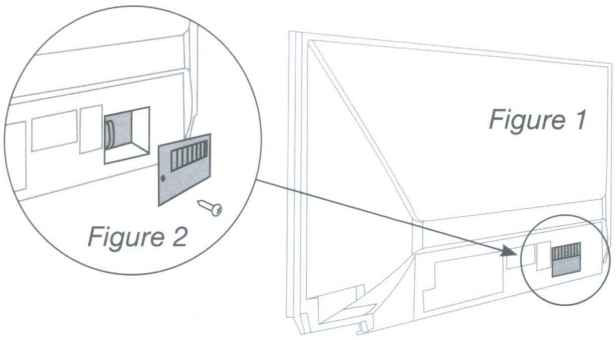

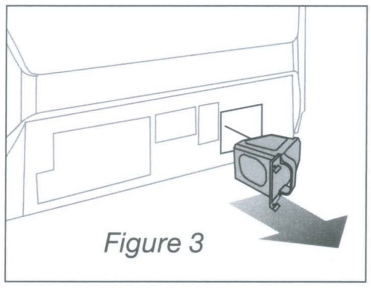

Use only replacement lamp part number 915B403001.

Lamp-Cartridge Filter Cleaning

If the TV shuts off after displaying the message "TV will shut down in a few seconds. Please check if the air flow is blocked" and/or the **STATUS** LED is yellow, the air filter may need cleaning. The air filter is part of the lamp cartridge. Use the following procedure to clean the filter.

1. Remove the lamp cartridge from the TV as described under "Removing the Old Lamp Cartridge." Do not tilt or rotate the cartridge. Do not touch the glass parts of the lamp cartridge.
2. Holding the lamp cartridge horizontal (do not tilt or rotate), use a soft dry brush or vacuum cleaner to remove any dust that may be present on the mesh filter. Do not use liquids. See figure 4.
3. Reinstall the lamp cartridge as described under "Installing the New Lamp Cartridge."

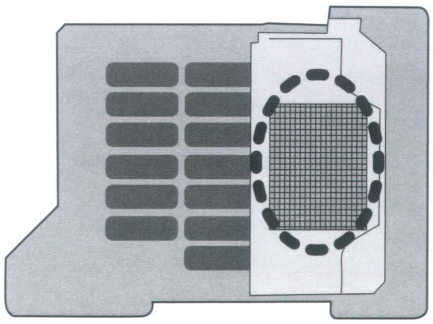

Figure 4

Keep lamp cartridge horizontal and remove dust from the mesh filter using a vacuum cleaner or soft dry brush.

Mitsubishi DLP Projection Television Limited Warranty

MITSUBISHI DIGITAL ELECTRONICS AMERICA, INC. ("MDEA") warrants as follows to the original purchaser of this television from an authorized MITSUBISHI Audio/Video Dealer, should it prove defective by reason of against defects arising from improper workmanship and/or material:

a. Parts. The lenticular (i.e. front picture) screen is warranted against defects in materials and workmanship for a period of thirty (30) days from the date of the original purchase at retail. The lamp and all other parts (except any software incorporated into this television) are warranted for a period of one (1) year from the date of the original purchase at retail. We will repair or replace, at our option, any defective part without charge for the part. Parts used for replacement may be replaced with those of like kind and quality and may be new or remanufactured. Parts used for replacement are warranted for the remainder of the original warranty period.

b. Embedded Software. MDEA warrants that all software incorporated into this television set (the "Embedded Software") will perform in accordance with the functional description of Embedded Software in all material respects, but MDEA does not warrant that the Embedded Software is error-free. The limited warranty contained in this section shall continue for a period of one (1) year from the date of the original purchase at retail. If, after prompt notice within the warranty period, MDEA determines that the Embedded Software has failed to perform in accordance with such functional description in all material respects and if such failure is not due to accident, misuse, modification or misapplication of the Embedded Software, then MDEA shall modify or replace the nonconforming Embedded Software at no charge to you, which at MDEA's sole discretion may be fulfilled by means of modification or replacement software contained on a replacement memory card for Customer installation. The foregoing shall be MDEA's sole obligation to you under this limited warranty. All rights under this limited warranty on the Embedded Software also subject to your acceptance of and compliance with the terms of the Software License Agreement applicable to this television, and this limited warranty on the Embedded Software shall be null and void if the Embedded Software is modified or changed in any manner except as specifically authorized by MDEA.

c. Labor. For thirty (30) days after the original purchase at retail, we will repair or replace, at our option, the lenticular screen if it proves defective. For certain items that are designed to be replaced by the consumer, including (but not limited to) some Embedded Software, the consumer is solely responsible for any replacement labor. For all other parts, we will provide the labor for a warranty repair by an authorized MITSUBISHI service center without charge for one (1) year from the original date of purchase at retail.

d. Notice. To obtain warranty service, you must notify an authorized MITSUBISHI service center of any defect within the applicable warranty time period.

e. This DLP Projection Television uses a single DLP chip to create the screen image. This technology creates the image using small dots, or picture elements (pixels). Your DLP Projection TV is manufactured to a high level of performance and quality, in fact, 99.99% perfect in the number of properly functioning pixels. As in other display technology, sometimes a pixel is continuously active, inactive or the incorrect color. Our standard is clear; MDEA warrants only that the percentage of properly functioning pixels will be not less than 99.99% of all pixels.

BEFORE REQUESTING SERVICE, please review the instruction booklet to insure proper installation and correct customer control adjustment. If the problem persists please arrange for warranty service.

1. TO OBTAIN WARRANTY SERVICE:

a. Contact your nearest authorized MITSUBISHI service center, whose name and address can be obtained from your MITSUBISHI dealer, by writing at the address provided below, calling MDEA at the 800-332-2119, or by using the support feature of our website at www.Mitsubishi-tv.com.

b. Warranty service will be provided in your home or, if required, at an authorized service shop, provided that your television is located within the geographic territory customarily covered by an authorized MITSUBISHI service center. If not, you must either deliver your television to an authorized service location at your own expense, or pay for any travel and/or transportation costs the service center may charge to and from your home. Actual service labor will be provided without charge.

c. Proof of purchase date from an authorized MITSUBISHI dealer is required when requesting warranty service. Present your sales receipt or other document which establishes proof and date of purchase. THE RETURN OF THE OWNER REGISTRATION CARD IS NOT A CONDITION OF COVERAGE UNDER THIS LIMITED WARRANTY. However, please return the Owner Registration Card so that we can contact you should a question of safety arise which could affect you.

d. To obtain a replacement lamp, order the lamp directly from the MDEA Parts Department at (800) 553-7278.

2. THIS LIMITED WARRANTY DOES NOT COVER:

a. Up to .01% pixel outages (small dot picture elements that are dark or incorrectly illuminated).

b. Damage to the lenticular screen or Fresnel lens, screen frame, cosmetic damage or to any other damage where such damage is caused by unauthorized modification, alteration, repairs to or service of the product by anyone other than an authorized MITSUBISHI service center; physical abuse to or misuse of the product (including any failure to carry out any maintenance as described in the Owner's Guide including air vent cleaning or any product damaged by excessive physical or electrical stress); any products that have had a serial number or any part thereof altered, defaced or removed; product use in any manner contrary to the Owner's Guide; freight damage; or any damage caused by acts of God

or other factors beyond the reasonable control of MDEA, such as power surge damage caused by electrical system or lightning. This limited warranty also excludes service calls where no defect in the product covered under this warranty is found, service calls related to unsatisfactory audio or visual reception or signal unless caused by a defect in the product that is covered under this limited warranty, all costs, expenses or any other damages arising from product installation, or set-ups, any adjustments of user controls (including contrast, brightness, color, tint, fine tuning, sharpness), other adjustment necessary to prepare the unit for display or use, connection with any external audio receiver, antenna, cable or satellite systems, or service of products purchased or serviced outside the U.S.A. Please consult the operating instructions contained in the Owner's Guide furnished with the product for information regarding user controls.

3. ANY EXPRESS WARRANTY NOT PROVIDED HEREIN, AND ANY REMEDY WHICH, BUT FOR THIS PROVISION, MIGHT ARISE BY IMPLICATION OR OPERATION OF LAW, IS HEREBY EXCLUDED AND DISCLAIMED. THE IMPLIED WARRANTIES OF MERCHANTABILITY AND OF FITNESS FOR ANY PARTICULAR PURPOSE ARE EXPRESSLY LIMITED TO A TERM OF ONE YEAR.

4. UNDER NO CIRCUMSTANCES SHALL MDEA BE LIABLE TO PURCHASER OR ANY OTHER PERSON FOR ANY INCIDENTAL, SPECIAL OR CONSEQUENTIAL DAMAGES, WHETHER ARISING OUT OF BREACH OF WARRANTY, BREACH OF CONTRACT, OR OTHERWISE.

5. Some states do not allow limitations on how long an implied warranty lasts, or the exclusion or limitation of incidental, special, or consequential damages, so the above limitations or exclusions may not apply to you.

6. This limited warranty gives you specific legal rights, and you may also have other rights which vary from state to state.

7. In the event of any dispute under this limited warranty, jurisdiction and venue for resolving that dispute will be in the state where the television was purchased and the laws of such state will govern.

MITSUBISHI

MITSUBISHI DIGITAL ELECTRONICS AMERICA, INC.
9351 Jeronimo Road
Irvine, CA 92618-1904

Trademark and License Information

LICENSOR'S SUPPLIERS DO NOT MAKE OR PASS ON TO END USER OR ANY OTHER THIRD PARTY, ANY EXPRESS, IMPLIED OR STATUTORY WARRANTY OR REPRESENTATION ON BEHALF OF SUCH SUPPLIERS, INCLUDING, BUT NOT LIMITED TO THE IMPLIED WARRANTIES OF NON-INFRINGEMENT, TITLE, MERCHANTABILITY OR FITNESS FOR A PARTICULAR PURPOSE.

Digital Light Processing® and DLP® are registered trademarks of Texas Instruments.

Manufactured under license from Dolby Laboratories. Dolby is a trademark of Dolby Laboratories.

HDMI™ the HDMI logo and High-Definition Multimedia Interface are trademarks or registered trademarks of HDMI Licensing LLC.

The software in this TV is based in part on the work of the Independent JPEG Group, copyright © 1991-1998, Thomas G. Lane, all rights reserved.

x.v.Color and the **x.v.Color** logo are trademarks of Sony Corporation.

ChannelView™, DeepField™ Imager, Easy Connect™, NetCommand®, PerfectColor™, PerfecTint™, Plush 1080p®, SharpEdge™, Smooth120Hz™ are trademarks of Mitsubishi Digital Electronics America, Inc.

WARNING: This product contains chemicals known to the State of California to cause cancer and/or birth defects or other reproductive harm.

Mitsubishi TV Software

END-USER LICENSE AGREEMENT FOR EMBEDDED SOFTWARE

IMPORTANT – READ CAREFULLY: This License Agreement is a legal agreement between you (either an individual or an entity) and Mitsubishi Digital Electronics America, Inc. (MDEA) for all software pre installed and/or provided along with this television ("Software"). By utilizing this television and Software, you agree to be bound by the terms of this License Agreement.

The Software is protected by United States copyright laws and international treaty provisions, as well as other intellectual property laws and treaties. The Software is licensed, not sold.

1. **LICENSE GRANT.** MDEA grants you a non-exclusive, non-transferable, limited right and license to use one copy of the Software only with the Mitsubishi television model that included this owner's guide and owned by you.

2. **RIGHTS AND LIMITATIONS.**

Software Not for Resale. You may not resell or otherwise transfer for value the Software, except in conjunction with a sale of the TV that Software has been pre installed.

Prohibition on Reverse Engineering, Decompilation and Disassembly. The Software contains trade secrets or other proprietary material in its human perceivable form and to protect them, you may not reverse engineer, decompile, or disassemble, or otherwise reduce the Software to any human perceivable form, except to the extent that the foregoing restriction is expressly prohibited by applicable law.

Separation of Components. The Software is licensed as a single product. Its component parts may not be separated for use on more than one TV.

No Rental. You may not rent, lease, lend, or sublicense the Software.

Trademarks. This License Agreement does not grant you any rights to any trademarks of MDEA.

3. **VIOLATIONS.** You understand that any use, copying or transfer of the Software, except as permitted pursuant to this License, may subject you to serious criminal and civil penalties including damages and an award to MDEA of attorneys' fees in connection with any violation of this License. You further understand that you may be held legally responsible for any copyright infringement or other violation of intellectual property rights that is caused, encouraged, or induced by your failure to abide by the terms of the License. This license is effective until terminated, and will terminate immediately without notice from MDEA or judicial resolution if you fail to comply with any provision of this License.

4. **COPYRIGHT.** All title and intellectual property rights in and to the Software (including but not limited to any images, photographs, animations, video, audio, music, text, and "applets" incorporated into the Software), and any accompanying printed materials are owned by or licensed to MDEA. All title and intellectual property rights in and to the content which may be accessed through use of the Software is the property of the respective content owner and may be protected by applicable copyright or other intellectual property laws and treaties. This License Agreement grants you no rights to use such content, except that you own the media on which the Software is recorded, but MDEA and its licensors retain ownership of the Software itself. All rights not expressly granted are reserved by MDEA.

5. **EXPORT RESTRICTIONS.** MDEA is licensing the Software for use within the United States. You agree that you will not export or re-export the Software. You specifically agree not to export or re-export the Software: (i) to any country to which the U.S. has embargoed or restricted the export of goods or services, which currently include, but are not necessarily limited to Cuba, Iran, Iraq, Libya, North Korea, Sudan, and Syria, or to any national of any such country, wherever located, who intends to transmit or transport the Software back to such country; (ii) to any person or entity who you know or have reason to know will utilize the Software in the design, development, or production of nuclear, chemical, or biological weapons; or (iii) to any person or entity who has been prohibited from participating in U.S. export transactions by any federal agency of the U.S. government. You warrant and represent that neither the BXA nor any other U.S. federal agency has suspended, revoked, or denied your export privileges.

6. **DISCLAIMER OF WARRANTY. EXCEPT AS OTHERWISE PROVIDED IN THIS LICENSE OR IN THE LIMITED WARRANTY APPLICABLE TO THE TV, MDEA MAKES NO OTHER WARRANTIES OF ANY KIND WHATSOEVER REGARDING THE SOFTWARE AND HEREBY EXPRESSLY DISCLAIMS ALL WARRANTIES OF ANY KIND WHATSOEVER, EXPRESS OR IMPLIED, WITH RESPECT TO THE SOFTWARE. ALL IMPLIED WARRANTIES, INCLUDING, WITHOUT LIMITATION, THE IMPLIED WARRANTIES OF MERCHANTABILITY AND FITNESS FOR A PARTICULAR PURPOSE ARE HEREBY EXPRESSLY DISCLAIMED BY MDEA. IN NO EVENT SHALL MDEA BE LIABLE TO YOU OR ANY THIRD PARTIES, IN CONTRACT, IN TORT OR OTHERWISE, FOR ANY DIRECT, INDIRECT, SPECIAL, INCIDENTAL OR CONSEQUENTIAL DAMAGES OF ANY KIND OR NATURE. BECAUSE SOME JURISDICTIONS DO NOT ALLOW THE EXCLUSION OR LIMITATION OF IMPLIED WARRANTIES, THE ABOVE LIMITATION MAY NOT APPLY TO YOU.**

7. **LIMITATION OF LIABILITY. MDEA SHALL NOT, UNDER ANY CIRCUMSTANCES BE LIABLE TO YOU OR ANY THIRD PARTIES FOR ANY DAMAGES OF ANY NATURE, WHETHER INDIRECT, SPECIAL, INCIDENTAL, CONSEQUENTIAL OR OTHERWISE, INCLUDING, BUT NOT LIMITED TO, ANY CLAIMS FOR LOST PROFITS, LOSS OF GOOD WILL OR EXPENDITURES MADE OR COMMITTED FOR IN RELIANCE ON THE CONTINUATION OF THIS LICENSE. YOU AGREE THAT NEITHER MDEA'S BREACH OF THIS LICENSE NOR ITS FAILURE TO REPAIR A DEFECT, ERROR OR BUG SHALL CONSTITUTE A FAILURE OF THE ESSENTIAL PURPOSE OF THIS LICENSE. BECAUSE SOME JURISDICTIONS DO NOT ALLOW THE EXCLUSION OR LIMITATION OF LIABILITY FOR CONSEQUENTIAL OR INCIDENTAL DAMAGES, THE ABOVE LIMITATIONS MAY NOT APPLY TO YOU. MDEA's liability to you for direct damages for any cause whatsoever and regardless of the form of the action, will be limited to the money paid by you for the TV (based on fair market value of the TV) that caused the damages.**

8. GENERAL. This License Agreement will be governed by the laws of the State of California.

MITSUBISHI ELECTRIC

Website:
www.mitsubishi-tv.com

E-mail:
MDEAservice@mdea.com

For questions, call Consumer Relations at

800-332-2119

To order replacement or additional remote controls, lamp cartridges or IR emitter cables,

Visit our website www.mitsuparts.com

or call

800-553-7278

SYSTEM RESET

If the TV does not respond to the remote control, control-panel buttons, or will not power on/off, hold power button for about 10 seconds.

The TV will take longer to power on after the system reset or AC on.

Setting changes you made most recently before the system reset, may be lost.

© 2009 Mitsubishi Digital Electronics America, Inc.
853B710B10

HDTV Quick-Setup Guide

Connecting HDTV Sources

Important. To view high-definition (HD) pictures you must use a high-definition programming source. High-definition sources can be cable service with an HD cable box, satellite service with an HD receiver, a Blu-Ray disc player, an antenna, and direct cable service without a box.

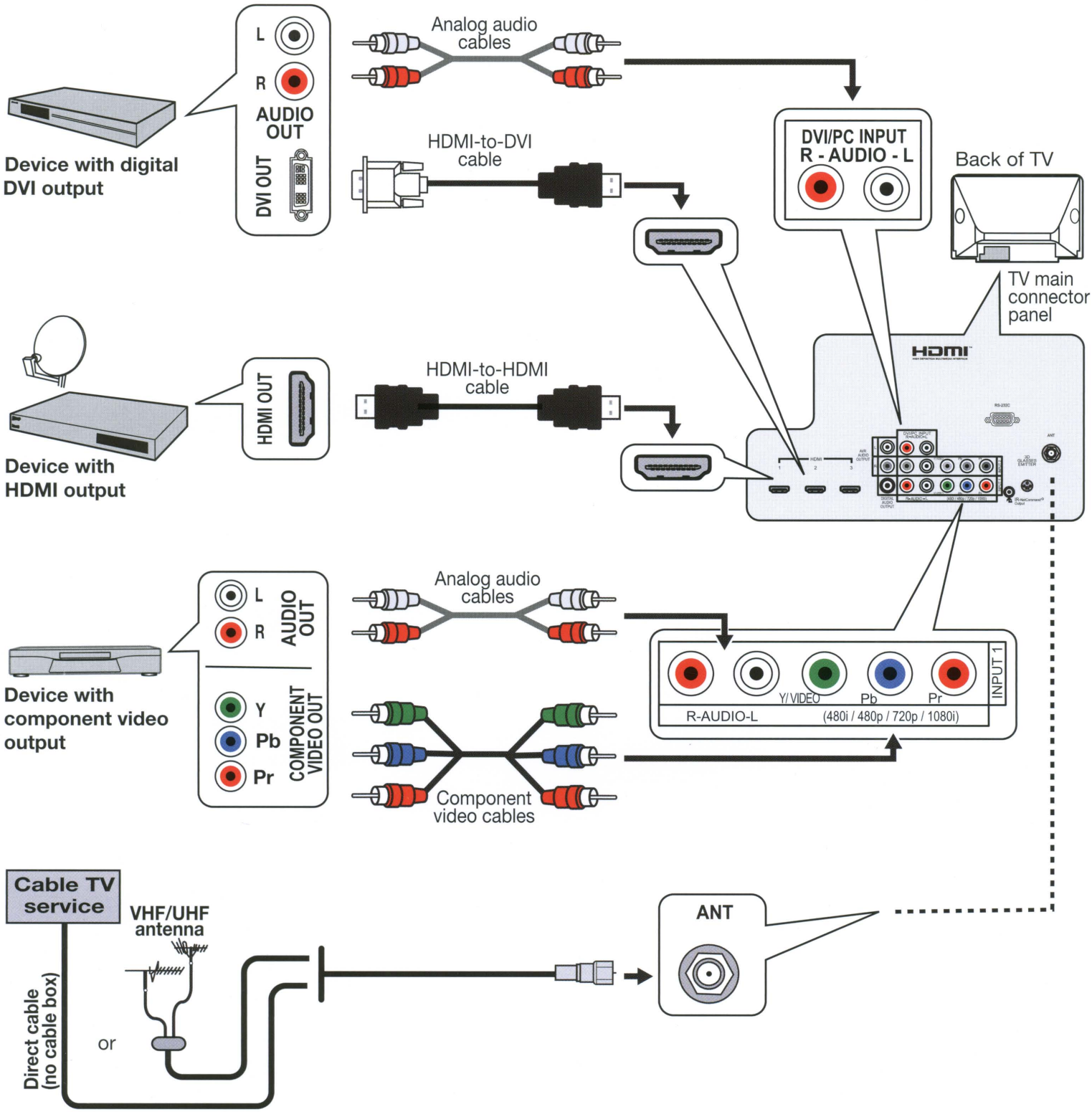

853B653A10

HDTV Quick-Setup Guide

MITSUBISHI ELECTRIC

Memorizing Channels on the ANT (Antenna) Input

Save channels to memory with a channel scan to enable reception of HD digital channels. The scan will search for local channels available from an antenna or direct cable service (no cable box). If you skip this step, the TV will receive only analog channels.

1. Press **MENU**.

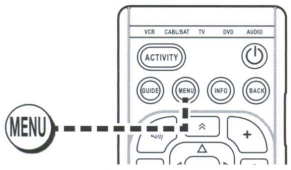

2. Press ▲ ▼ and ◀ ▶ to open the ***Initial > Channel*** menu. Press **ENTER**.

3. Select **Ant Air** if connected to an over-the-air antenna. Select **Ant Cable** for direct cable.

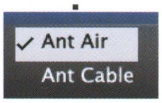

4. Highlight **Scan** and press **ENTER**. Wait for the completion message before continuting.

Setting Up Other Inputs

1. Connect your devices to the TV, making note of which TV input jack is used for each device.

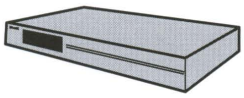

2. Power on all connected devices to ensure detection.

3. Power on the TV.

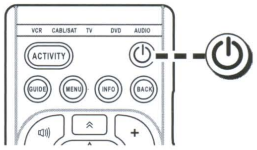

4. When the ***New Device Found*** menu displays, select the device type from the list if the device is not recognized automatically.

Sample New Device Found menu

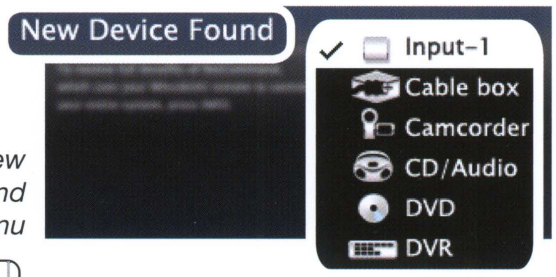

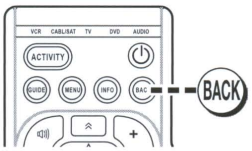

5. Press **BACK** to close the menu.

The TV will then display the ***New Device Found*** menu for the next connection it finds.

Selecting a Source to Watch

1. Press **ACTIVITY**.

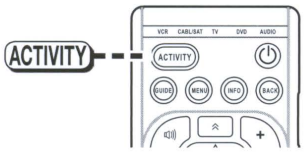

2. Press ▲ ▼ and ◀ ▶ to highlight a source.

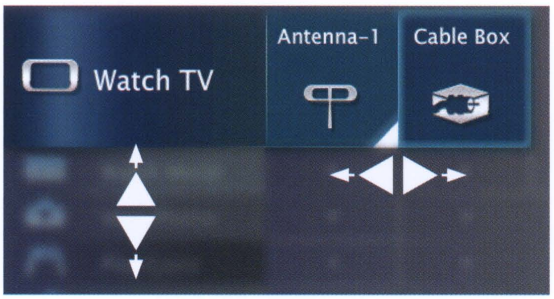

3. Press **ENTER** to switch to the source.

Identifying HD Broadcasts Received on the ANT (Antenna) Input

1. Press **INFO**.

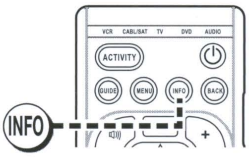

2. The status display will indicate if the broadcast is analog standard definition (480i), standard definition digital (SD), or high-definition digital (HD).

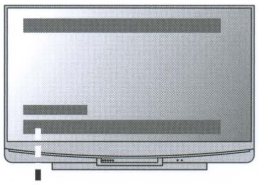

Receiving High-Definition Digital Signal (HD)

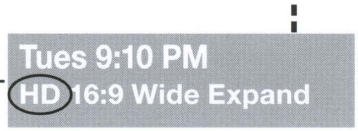

MITSUBISHI ELECTRIC

PRODUCT REGISTRATION

IMPORTANT!

REGISTER NOW TO PROTECT YOUR INVESTMENT!

EFFICIENT SERVICE

WE CAN CONTACT YOU IN CASE OF RECALL OR TO COMMUNICATE IMPORTANT INFORMATION.

WE MAY ALSO SEND YOU SPECIAL OFFERS ON MITSUBISHI PRODUCTS.

OR REGISTER ON-LINE AT: WWW.PRODREGISTER.COM/MITSUBISHI

IMPORTANT! Register your product NOW

Registering is easy. Just fill out the form below to be notified of important product updates and special offers.

Or register online at: WWW.PRODREGISTER.COM/MITSUBISHI

1. 1. ☐ Mr. 2. ☐ Mrs. 3. ☐ Ms. 4. ☐ Miss

First name **Initial** **Last name**

Street **Apt.**

City **State/Province** **Zip/Postal code**

E-mail address

IAL01

2.A. Model number:

B. Serial number:

Mitsubishi Digital Electronics America Inc.
WD-60737 MODEL
SERIAL

(Please refer to outer carton or back panel of product for model and serial number.)

3. Telephone number:

( ) –

4. Your date of birth: /
Month Year

5. Marital status: 1. ☐ Married 2. ☐ Single

6. Date of purchase:

/ /
Month Day Year

7. Name of store where purchased:

8. A. Do you have plans to purchase another 40″ or larger TV?

1. ☐ Yes 2. ☐ No

B. If yes, will you be making this purchase in the next:

1. ☐ 6 months 3. ☐ 18 months
2. ☐ 12 months 4. ☐ 24 months

9. Did you purchase an extended warranty at the store?

1. ☐ Yes 2. ☐ No

10. What products will be connected to your Mitsubishi purchase?

01. ☐ Cable box
02. ☐ Satellite receiver
03. ☐ DVD player
04. ☐ Blu-ray player
05. ☐ HD-DVD player
06. ☐ Antenna
07. ☐ Surround sound speakers
08. ☐ A/V receiver
09. ☐ Camcorder
10. ☐ Video game
11. ☐ Computer
12. ☐ DVR

11. Do you plan to enhance your Mitsubishi purchase by acquiring any of the items below?

01. ☐ Cable box
02. ☐ Satellite receiver
03. ☐ DVD player
04. ☐ Blu-ray player
05. ☐ HD-DVD player
06. ☐ Antenna
07. ☐ Surround sound speakers
08. ☐ A/V receiver
09. ☐ Camcorder
10. ☐ Video game
11. ☐ Computer
12. ☐ DVR

12. Prior to making this purchase, which of the sources below did you reference?

1. ☐ Consumer reports
2. ☐ cnet.com
3. ☐ MSN tech and gadgets
4. ☐ Mitsubishi-tv.com
5. ☐ Yahoo/Google search
6. ☐ Customer reviews
7. ☐ Bestbuy.com

13. *Not including yourself,* what is the GENDER and AGE (in years) of children and other adults in your household?

1. ☐ No one else in household
2. ☐ Child under 1 year

Male	Female	Age	Male	Female	Age
1. ☐	2. ☐	yrs.	1. ☐	2. ☐	yrs.
1. ☐	2. ☐	yrs.	1. ☐	2. ☐	yrs.

14. Occupation/Employment status: *(check all that apply)*

	You		Spouse
Professional/Technical	☐	01.	☐
Upper management/Executive	☐	02.	☐
Middle management	☐	03.	☐
Sales/Marketing	☐	04.	☐
Clerical/Service worker	☐	05.	☐
Tradesman/Machine operator/ Laborer	☐	06.	☐
Teacher/Educator	☐	07.	☐
Healthcare - Physician/Nurse/ Other	☐	08.	☐
Homemaker	☐	09.	☐
Military	☐	10.	☐
Retired	☐	11.	☐
Self employed/Business owner	☐	12.	☐
Work from home office	☐	13.	☐

15. Which group describes your annual family income?

01. ☐ Under $15,000
02. ☐ $15,000-$19,999
03. ☐ $20,000-$29,999
04. ☐ $30,000-$39,999
05. ☐ $40,000-$49,999
06. ☐ $50,000-$59,999
07. ☐ $60,000-$74,999
08. ☐ $75,000-$99,999
09. ☐ $100,000-$124,999
10. ☐ $125,000-$149,999
11. ☐ $150,000-$174,999
12. ☐ $175,000-$199,999
13. ☐ $200,000-$249,999
14. ☐ $250,000 & over

16. Level of education: (check highest level completed)

1. ☐ Completed high school
2. ☐ Completed college
3. ☐ Completed graduate school

17. For your primary residence, do you:

1. ☐ Own? 2. ☐ Rent?

18. What type of internet access do you use at home?

1. ☐ Dial-up
2. ☐ Cable
3. ☐ DSL
4. ☐ Other broadband (e.g. fiber optic, wireless Wi-Max)
5. ☐ Satellite

19. When new products that have the latest technologies appear on the market, do you or someone in your household:

1. ☐ Tend to buy such items as soon as they are available?
2. ☐ Tend to wait until the item has been around for a while before buying?

20. To help us understand our customers' lifestyles, please indicate the interests and activities in which you or your spouse enjoy participating on a regular basis.

Home Life

01. ☐ Grandchildren
02. ☐ Home improvement/Do-it-yourself
03. ☐ Gardening
04. ☐ Own a dog
05. ☐ Own a cat

Leisure

06. ☐ Cultural/Art events
07. ☐ Avid book reading
08. ☐ Bible/Devotional reading
09. ☐ Gourmet cooking/Fine foods
10. ☐ Wines
11. ☐ Art/Antique collecting
12. ☐ Stamp/Coin collecting
13. ☐ Crafts
14. ☐ Sewing/Needlework/Knitting

Travel

15. ☐ Airline club/Frequent flyer
16. ☐ Travel in USA
17. ☐ Foreign travel
18. ☐ Cruise ship vacations
19. ☐ RV vacations
20. ☐ Casino gambling

Investing and Money

21. ☐ Shopping by catalog/mail order
22. ☐ Shopping by internet
23. ☐ Use credit cards regularly
24. ☐ Donate to charitable causes
25. ☐ Investments/Money making opportunities
26. ☐ Contests/Sweepstakes

Great Outdoors

27. ☐ Hunting/Shooting
28. ☐ Fishing
29. ☐ Camping/Hiking
30. ☐ Wildlife/Environmental issues
31. ☐ Boating/Sailing

Sports, Fitness & Health

32. ☐ Physical fitness/Exercise
33. ☐ Walking for health
34. ☐ Health/Natural foods
35. ☐ Dieting/Weight control
36. ☐ Self-improvement
37. ☐ Golf
38. ☐ Biking
39. ☐ Snowboarding/Snow skiing
40. ☐ NASCAR

Thanks for taking the time to fill out this questionnaire. Your answers will be used for market research studies and reports. They will also allow you to receive important mailings and special offers from a number of fine companies whose products and services relate directly to the specific interests, hobbies, and other information indicated above. Through this selective program, you will be able to obtain more information about activities in which you are involved and less about those in which you are not. Please check here if, for some reason, you would prefer *not* to participate in this opportunity. ☐

Failure to return this card will not diminish your warranty rights.

Copyright © 2009 All Rights Reserved

Please fold in half and seal with tape. Do not staple.

PLEASE SEND OTHER CORRESPONDENCE TO:

MITSUBISHI DIGITAL ELECTRONICS AMERICA, INC.
9351 JERONIMO RD.
IRVINE, CA 92618-1904

I A L O 1

PN# 853B700A10

FIRST-CLASS POSTAGE REQUIRED
POST OFFICE WILL NOT DELIVER WITHOUT PROPER POSTAGE.

MITSUBISHI ELECTRIC

PO BOX 174268
DENVER CO 80217-4268