myprojectorlamps.com

The most trusted, dependable name in projector lamp sales.

http://www.myprojectorlamps.com

http://www.myprojectorlamps.ca

http://www.myprojectorlamps.eu

The following projector manual has not been modified or altered in any way.

marantz®

Model VP-12S1 User Guide

DLP™ Projector

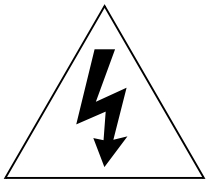

CAUTION

RISK OF ELECTRIC SHOCK
DO NOT OPEN

CAUTION: TO REDUCE THE RISK OF ELECTRIC SHOCK,

DO NOT REMOVE COVER (OR BACK)

NO USER-SERVICEABLE PARTS INSIDE

REFER SERVICING TO QUALIFIED SERVICE PERSONNEL

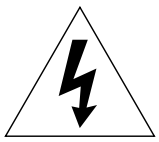

The lightning symbol in the triangle, is intended to alert the user to the presence of uninsulated “dangerous voltage” within the product’s enclosure that may be of sufficient magnitude to constitute a risk of electric shock to persons.

The exclamation mark in the triangle is intended to alert the user to the presence of important operating and maintenance (servicing) instructions in the literature accompanying the appliance.

WARNING

TO REDUCE THE RISK OF FIRE OR ELECTRIC SHOCK,
DO NOT EXPOSE THIS APPLIANCE TO RAIN OR MOISTURE.

CAUTION: TO PREVENT ELECTRIC SHOCK, MATCH WIDE BLADE OF PLUG TO WIDE SLOT, FULLY INSERT.

ATTENTION: POUR ÉVITER LES CHOCS ÉLECTRIQUES, INTRODUIRE LA LAME LA PLUS LARGE DE LA FICHE DANS LA BORNE CORRESPONDANTE DE LA PRISE ET POUSSER JUSQU’AU FOND.

For the customers in the USA:

This equipment has been tested and found to comply with the limits for a Class B digital device, pursuant to Part 15 of the FCC Rules. These limits are designed to provide reasonable protection against harmful interference when the equipment is operated in a commercial environment. This equipment generates, uses and can radiate radio frequency energy and, if not installed and used in accordance with the instruction manual, may cause harmful interference to radio communications. Operation of this equipment in a residential area is likely to cause harmful interference in which case the user will be required to correct the interference at his own expense.

- Reorient or relocate the receiving antenna.
- Keep an appropriate distance between the equipment and the receiver.
- Connect the equipment into an outlet on a circuit different from that to which the receiver is connected.
- Consult the dealer or an experienced radio/TV technician for help.

NOTE:

Changes or modifications not expressly approved by the party responsible for compliance could void the user’s authority to operate the equipment.

For the customers in Canada:

This Class B digital apparatus meets all requirements of the Canadian Interference-Causing Equipment regulations.

IMPORTANT SAFETY INSTRUCTIONS

READ BEFORE OPERATING EQUIPMENT

This product was designed and manufactured to meet strict quality and safety standards. There are, however, some installation and operational precautions which you should be particularly aware of.

1. Read these Instructions: All the safety and operating instructions should be read before the appliance is operated.
2. Keep these Instructions: The safety and operating instructions should be kept for future reference.
3. Heed all Warnings: All warnings on the appliance and in the operating instructions should be adhered to.
4. Follow all Instructions: All operating and use instructions should be followed.
5. Cleaning: Unplug this video product from the wall outlet before cleaning. Do not use liquid cleaners or aerosol cleaners. Use a damp cloth for cleaning, and clean only with dry cloth.
6. Attachments: Only use attachments/accessories specified by the manufacturer.
7. Water and Moisture: Do not use this video product near water such as, near a bath tub, wash bowl, kitchen sink, or laundry tub, in a wet basement, or near a swimming pool, and the like.
8. Accessories: Use only with the cart, stand, tripod, bracket, or table specified by the manufacturer, or sold with the apparatus. When a cart is used, use caution when moving the cart/apparatus combination to avoid injury from tip-over.

9. Ventilation: Slots and openings in the cabinet are provided for ventilation and to ensure reliable operation of the video product and to protect it from overheating, and these openings must not be blocked or covered. Do not block any ventilation openings. Install in accordance with the manufacturer's instructions. Do not install near any heat sources such as radiators, heat registers, stoves, or other apparatus (including amplifiers) that produce heat. This video product should not be placed in a built-in installation such as a bookcase or rack unless proper ventilation is provided or the manufacturer's instructions have been adhered to.
10. Power Sources: This video product should be operated only under the type of power source indicated on the marked label. If you are not sure of the type of power supply for your home, consult the appliance dealer or a local power company. For video products intended to operate with battery power, or other sources, refer to the operating instructions.
11. Grounding or Polarization: Do not defeat the safety purpose of the polarized or grounding-type plug. A polarized plug has two blades with one wider than the other. A grounding type plug has two blades and a third grounding prong. The wide blade or the third prong are provided for your safety. If the provided plug does not fit into your outlet, consult an electrician for replacement of the obsolete outlet.

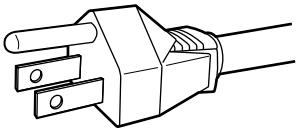

AC POLARIZED PLUG

12. Power-Cord Protection: Protect the power code from being walked on or pinched particularly at plugs, convenience receptacles, and the point where they exit from the apparatus.
13. Protective Attachment Plug: The appliance is equipped with an attachment plug having overload protection. This is a safety feature. See Instruction Manual for replacement or resetting the protective device. If the plug needs to be replaced, be sure that the service technician has used a replacement plug specified by the manufacturer that has the same overload protection as the original plug.
14. Lighting: Unplug this apparatus during lightning storms or when unused for long periods of time.
15. Power Lines: An outside antenna system should not be located in the vicinity of overhead power lines or other electric light or power circuits, or where it can fall into such power lines or circuits. When installing an outside antenna system, extreme care should be taken to keep from touching such power lines or circuits. Any contact with them might be fatal.
16. Overloading: Do not overload wall outlets and extension cords as this can result in a risk of fire or electric shock.
17. Object and Liquid Entry: Never push objects of any kind into this video product through openings as they may touch dangerous voltage points or short-out parts that could result in a fire or electric shock. Never spill liquid of any kind on the video product.
18. Servicing: Do not attempt to service this video product yourself as opening or removing covers may expose you to dangerous voltage or other hazards. Refer all servicing to a qualified service personnel.
19. Damage Requiring Service: Servicing is required when the apparatus has been damaged in any way, such as power-supply cord or plug is damaged, liquid has been spilled or objects have fallen into the apparatus has been exposed to rain or moisture, does not operate normally, or has been dropped.
20. Replacement Parts: When replacement parts are required, be sure that the service technician has used replacement parts specified by the manufacturer or have the same characteristics as the original part. Unauthorized substitutions may result in fire, electric shock or other hazards.
21. Safety Check: Upon the completion of any service or repairs to this video product, ask a service technician to perform safety checks to determine that the video product is in proper operating condition.
22. Carts and Stands: The appliance should be used only with a cart or stand that is recommended by the manufacturer.
23. An appliance and cart combination should be handled with care. Quick stops, excessive force, and uneven surfaces may cause the appliance and cart combination to overturn.
24. When the projector is mounted on the ceiling, the Ceiling Mount Kit approved by MARANTZ must be used for installation.
25. Do not look into the lens when the projector is turned on. It could damage your eyesight.
26. Unplug the projector from the wall outlet if it is not to be used for a few days.

ENGLISH

TABLE OF CONTENTS

INTRODUCTION

FEATURES **1**
PROJECTOR LAYOUT AND FUNCTIONAL OVERVIEW **2**
Front and Top 2
Right Side and Rear 3
Bottom 5
Height Adjustment 5
Remote Controller 6
Preparing the Remote Controller 7

SET UP PROCEDURES

INSTALLATION **8**
Recommended Setting 8
Distance between the projector and the screen (throw distance) 9
Image Position Adjustment 10
Advanced Setting 11
The Screen Image in a Wide screen (16:9) 12
The Screen Image in a 4:3 screen 13
CONNECTION **14**
Connections with Video equipment 14
Connection with a HD-Video or PC 14
Connection with a DV camcoder 15
Advanced connection 15
INITIAL SET UP **16**
TO TURN OFF THE POWER **16**

OPERATIONS

OPERATIONS **17**
Menu 17
Picture Adjust 17
Setting 17
Display 18
Configuration 18
Trigger2 19
Memory 19
Lamp Life and Replacement Lamp 20

ADDITIONAL INFORMATION

MAINTENANCE **21**
Replacing Lamp Unit 21
Cleaning the lens 21
Replacement parts 21
Optional accessories 21
TROUBLESHOOTING **22**
ERROR MODE **22**
ON SCREEN MESSAGE **23**
SPECIFICATIONS **23**
DIMENSIONS **25**

FEATURES

■ Optics

- Texas Instruments Digital Light Processing Technology
- High Definition Panel (1280 x 720), DMD™ HD
- 16 : 9 Aspect Ratio
- Newly developed custom optics by Minolta
- 1200 : 1 Contrast Ratio
- 700 ANSI Lumens Brightness
- Brightness Uniformity : 90 %
- No Halo Effect
- Lens Up/Down Shift construction
- Short Throw Distance: 80"-8.6ft (2.6m), 100"-10.9ft (3.3m)
- Dust Free optics Sealing
- No Light Leakage (Double Seals Cabinet Structure)
- Extremely Quite (Noise Cancel Duct Construction, Ceiling Color Wheel Motor)
- Long Life Lamp (Average 2000 Hours)
- Double Shrink Seal Lamp Structure minimizes Burst Ratio

■ Electronics & Software

- Full Digital device
- 3 Faroudja Chips Inside (Decoder, Doubler, and Enhancer)
- 3-2 pull down
- 10-Bit Digital Gamma Processing
- Horizontal Keystone Correction
- 480p, 720p,1080i adapted
- IEEE 1394 DV Format adapted for Digital Video Camera Playback
- PC Signal VGA to XGA
- Three Picture Modes: Theater, Standard, Dynamic
- Nine Picture memories
- 4 Aspect Modes
- Three Color Temperatures
- Black Level Selection
- Control through RS232C
- Two trigger for powered Screen Control
- Ecology Lamp mode

– **DLP, Digital Micromirror Device** and **DMD** are trademarks of Texas Instruments.
– **"DCDi"** is a trademark of Faroudja, a division of Sage Inc.
– **"i.LINK"** and the **"i.LINK"** Logo are trademarks.
– Even if no trademarks are indicated, they are greatly valued.

Note: Pixel defects

DMD™ (Digital Micromirror Device™) is one of the most advanced technologies for consumer products. The DMD™ made by high precision technology, however some pixel defects may be found on the projected image. We are trying our best to control the quality in order to reduce the number of defective pixels. It is almost impossible to have zero pixel defects, even using the most advanced technology. This is not a problem only for Marantz, but all DLP™ projector manufactures. Therefore we have to note that the warranty does not cover the DMD™ for pixel defects. We appreciate your understandings.

Note: Lamp

SHP lamp is one of the most advanced technologies for consumer products. The lamp made by high precision technology, however some lamps might be failing before it reaches its life. And projector's brightness is getting darker along with accumulated lamp usage hours. We are trying our best to control the quality in order to reduce lamp failures. It is almost impossible to have zero failure, even using the most advanced technology. This is not a problem only for Marantz, but all projector manufactures. Therefore we have to note that the warranty does not cover the SHP lamp for lamp failures: explosion, and non-lighting except initial use. And also we have to note that the warranty does not cover the SHP lamp for lamp failures: flickering, and getting darker along with accumulated lamp usage hours. We appreciate your understandings.

PROJECTOR LAYOUT AND FUNCTIONAL OVERVIEW

Front and Top

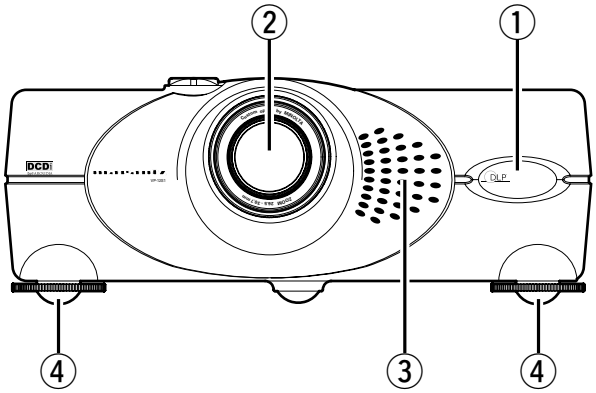

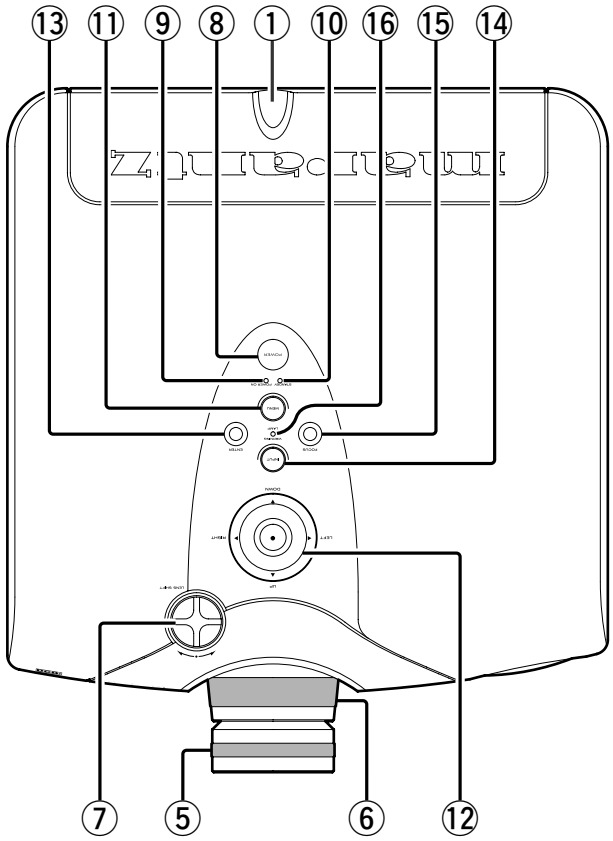

① IR sensor (front and rear)

② Projection Lens

③ Ventilation holes

Notes:

- Do not place anything near the ventilation holes to avoid overheat inside the unit.
- Do not place your hand or objects near the ventilation holes; the air is coming out.

④ Adjustable feet

Adjust the vertical angle of the projector.

⑤ Focus ring

Adjust the picture focus.

⑥ Zoom ring

Adjust the size of the projected image.

⑦ Lens Shift knob

Manually adjust the position of the image vertically.

⑧ POWER key

Press to turn the projector ON or STANDBY mode.

⑨ POWER ON indicator

Lights up when the power is turned on. Flashes while the projector goes into standby mode for about one minute.

⑩ STANDBY indicator

Lights up when the power is turned off.

⑪ MENU key

Display the on-screen menu.

⑫ The ▲ / ▼ / ◀ / ▶ keys

Control the MENU cursor.

⑬ ENTER key

Confirm "Reset All", "Reset Lamp Life", "New Lamp?".

⑭ INPUT SELECT key

When the key is pressed, the unit toggles between COMPONENT, S-VIDEO, VIDEO, and RGB inputs.

⑮ FOCUS key

Display a focus pattern.

⑯ WARNING/LAMP indicator

Flashes or lights up when something is wrong with the lamp cover, lamp, fan, or temperature inside the projector.

Right Side and Rear

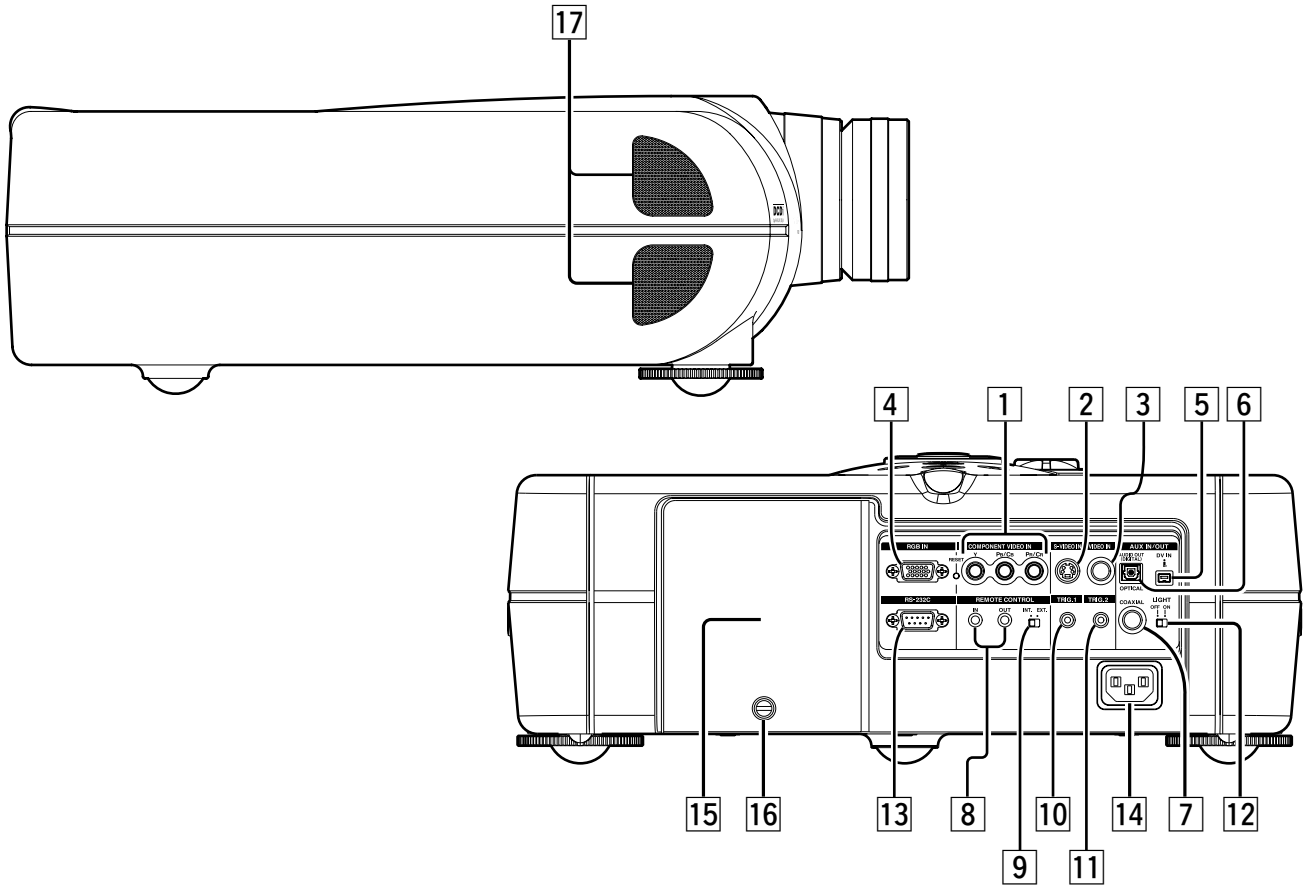

1 COMPONENT VIDEO IN

Y, PB/CB, PR/CR connectors.
Connect the COMPONENT VIDEO output from video equipment or an A/V processor/receiver with a component video output.

2 S-VIDEO IN

Connect the S-VIDEO output from a video equipment.

3 VIDEO IN

Connect the composite video output from a video equipment.

4 RGB IN

Connect the analog RGB output from a computer equipment.

5 AUX DV IN

Connect the i.LINK(DV-SD format) output from a video equipment.

6 AUX OPTICAL

Connect the optical input from an audio equipment.
Audio out terminal of DV-IN signal.

7 AUX AUDIO OUT (DIGITAL)

Connect the COAXIAL input from an audio equipment.
Audio out terminal of DV-IN signal.

8 REMOTE CONTROL IN/OUT

By connecting this projector to another Marantz audio component using a supplied System Control cable, you can remotely operate the components as a single system.

- When connecting to component with a remote sensor (such as the SR-14,SR-18,SR-19), be sure to connect the "REMOTE CONTROL IN" jack of this projector to the "REMOTE CONTROL OUT" jack of the component with the remote sensor.
- When connecting to component which is not equipped with a remote sensor, be sure to connect the component to the "REMOTE CONTROL OUT" jack of this projector.

9 REMOTE switch (EXTERNAL/INTERNAL)

When using this projector independently, set this switch to "INTERNAL". When using this projector in a system with a Marantz DVD player or AV Receiver equipped with a remote sensor, set the switch to "EXTERNAL".

10 TRIG.1(TRIGGER 1)

When the unit is turned on, 12V is output. When the unit is turned off, no voltage is output. This allows such as a powered up/down screen,whenever the projector is turned on or off.

11 TRIG.2(TRIGGER 2)

Select ON or OFF at each aspect mode, such as Full, Normal, Zoom, and Through to control screen aspect ratio with powered up/down dual aspect ratio screen.

Note:

Do not use TRIG.1 and TRIG.2, as the power source.

12 LIGHT ON/OFF

Select ON : The connector panel lights up.

13 RS232C

Connect the RS232C of equipment for external control.

14 AC IN

Connect the supplied AC power code.

15 Lamp cover

16 Lamp cover securing screw

17 Ventilation holes

Notes:

- Do not place anything near the ventilation holes to avoid overheat inside the unit.
- Do not place your hand or objects near the ventilation holes; the air is coming out.

Bottom

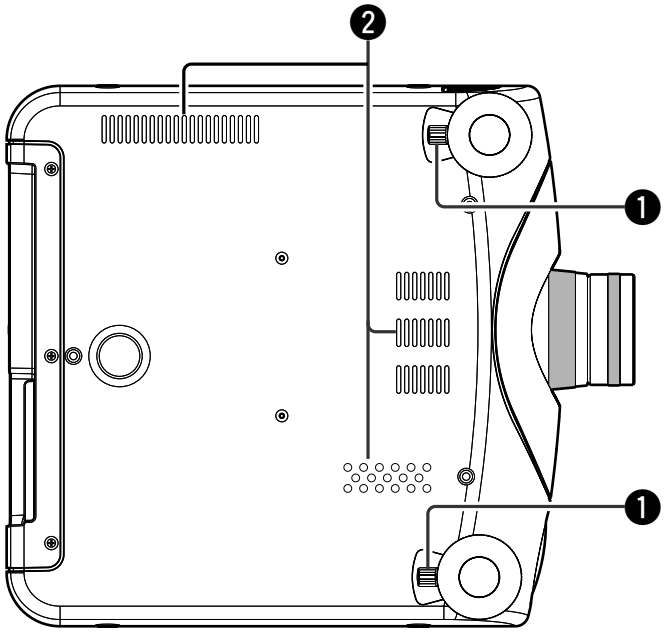

❶ Adjustment lever

Lift the projector and turn the adjustment lever right or left. The adjustable feet will extend from the projector. Then, release the lever, the adjustable feet is locked.

❷ Ventilation holes

Notes:

- Do not place anything near the ventilation holes to avoid overheat inside the unit.
- Do not place your hand or objects near the ventilation holes; the air is coming out.

Height Adjustment

How to use adjustable feet and adjustment lever.

(1) Release the adjustable feet.

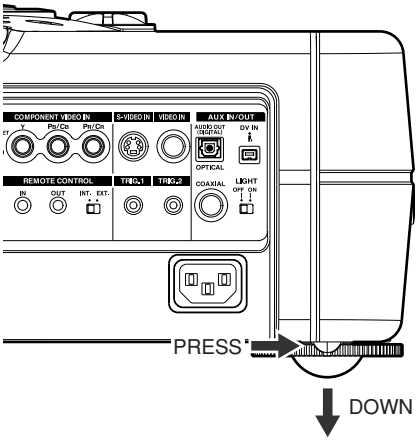

(2) Detail adjustment

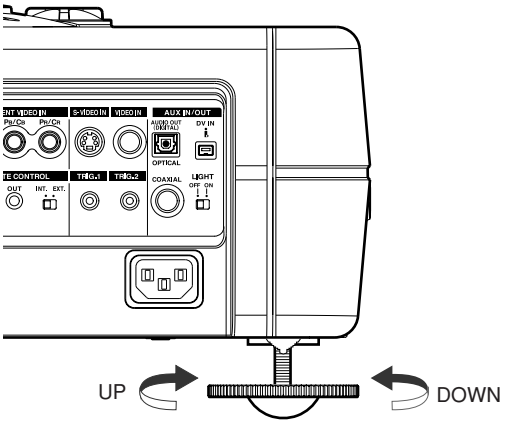

Note : Lift the unit up carefully.

Remote Controller

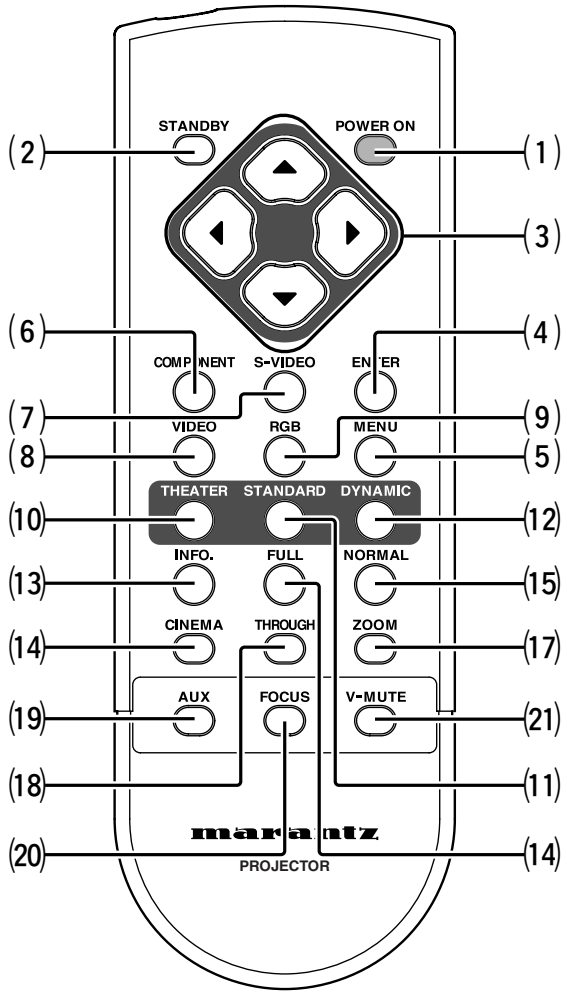

(1) **POWER ON key**
Turn the projector on.

(2) **STANDBY key**
Turn the projector off.

(3) **▲ / ▼ / ◀ / ▶ keys**
Control the MENU cursor.

(4) **ENTER key**
Confirm "Reset All", "Reset Lamp Life", "New Lamp?".

(5) **MENU key**
Display the on-screen menu.

(6) **COMPONENT key**
Select the COMPONENT VIDEO IN signal.

(7) **S-VIDEO key**
Select the S-VIDEO IN signal.

(8) **VIDEO key**
Select the VIDEO IN signal.

(9) **RGB key**
Select the RGB IN signal.

(10) **THEATER key**
Select the Theater picture mode.
When the key is pressed, the mode toggles Theater1, Theater2, Theater3 and Theater Default.

(11) **STANDARD key**
Select the STANDARD picture mode.
When the key is pressed, the mode toggles Standard1, Standard 2, Standard 3, and Standard Default.

(12) **DYNAMIC key**
Select the Dynamic picture mode.
When the key is pressed, the mode toggles Dynamic1, Dynamic2, Dynamic3 and Dynamic Default.

Note :
If you need discrete command for above picture modes, you can down load from "www.marantz.com".

(13) **INFO key**
Turn the information menu on or off.

(14) **CINEMA key**
Press to turn the CINEMA mode – auto 3-2 pull down mode – on or off.

(15) **NORMAL key**
Select NORMAL mode from four aspect ratio modes.

(16) **FULL key**
Select FULL mode from four aspect ratio modes.

(17) **ZOOM key**
Select ZOOM mode from four aspect ratio modes.

(18) **THROUGH key**
Select THROUGH mode from four aspect ratio modes.

(19) **AUX key**
Select the AUX IN (DV IN) signal.

(20) **FOCUS key**
Display a focus pattern.

(21) **V-MUTE key**
Cuts off the picture.

Preparing the Remote Controller

1. Open the cover.

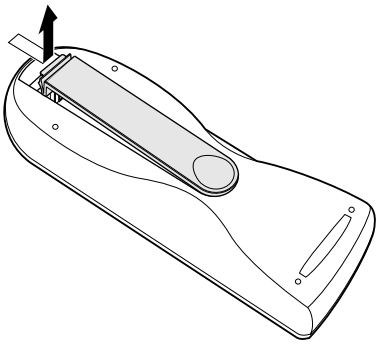

2. Insert batteries (AA).
Make sure to match the + and – marks on the batteries with inside the battery compartment.

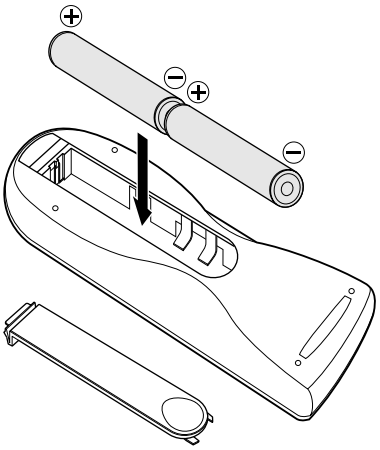

3. Close the cover.

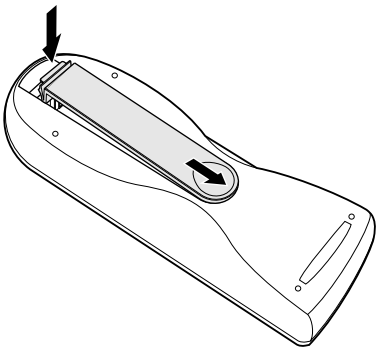

CAUTION

- The available battery types are limited: manganese dry cell and alkaline dry cell.
- Do not mix different battery types.
- Do not mix old and new batteries.
- Only batteries of the same type are to be used.
- Remove exhausted batteries from the Remote Controller.
- Do not attempt to recharge non-rechargeable batteries.
- Do not use rechargeable batteries.
- Batteries are to be inserted with the correct polarity.
- The supply terminals are not to be short-circuited.
- Never throw batteries in a fire or attempt to open up its outer casing.
- If the user does not intend to use the Remote Controller for a long time, remove the batteries.
- Keep away from heat.
- The effect range of the Remote Controller is approximately 6m.
- Do not be subjected to strong shock.
- Do not be subjected to moisture.
  If the unit gets moistured, wipe it off immediately.
- The Remote Controller operation may not function if the projector's IR sensors are exposed to direct sun light or strong artificial light, or if there is an obstacle between the IR sensors and the Remote Controller.

INSTALLATION

Recommended Setting

■ **Table Top**

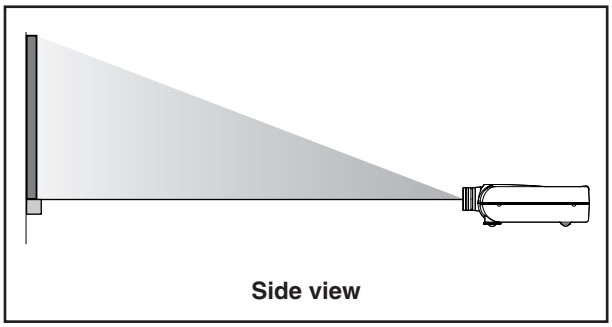

Side view

Adjust the vertical and horizontal positions of the projector.

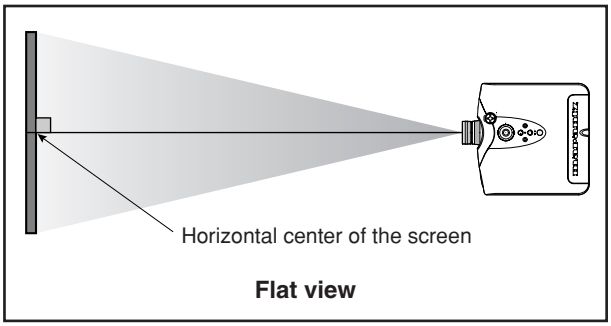

Flat view

■ **Ceiling Installation**

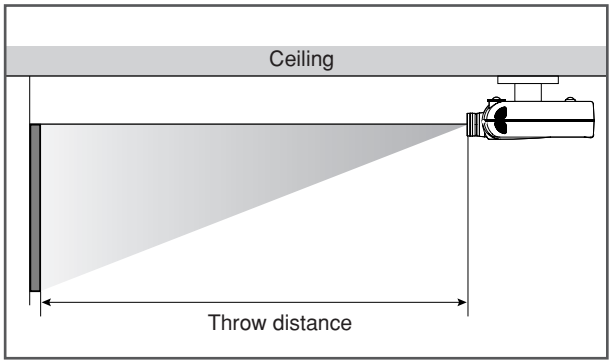

Note : Lens shift position is at Full up.

CAUTION

– For ceiling installation, consult with Marantz authorized dealer.
– Do not look into the lens when the projector is turned on.
It could damage your eyesight.

Distance between the projector and the screen (throw distance)

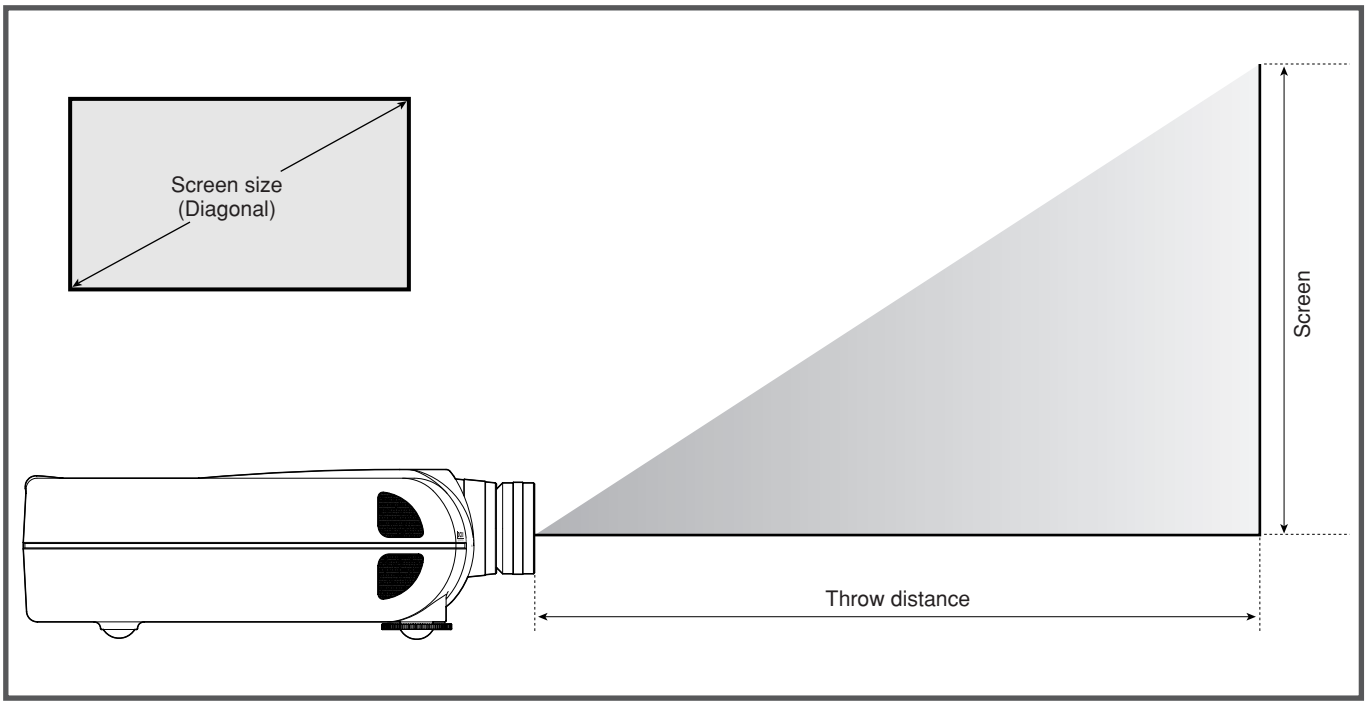

Screen Size (Diagonal)	16:9 screen		4:3 screen	
	Throw distance		Throw distance	
	Minimum	Maximum	Minimum	Maximum
40 inch	50 7/16 inch	58 11/16 inch	46 1/4 inch	53 3/4 inch
	1,281 mm	1,491 mm	1,172 mm	1,365 mm
60 inch	76 9/16 inch	89 inch	70 1/8 inch	81 9/16 inch
	1,945 mm	2,260 mm	1,782 mm	2,071 mm
80 inch	102 3/4 inch	119 1/4 inch	94 3/16 inch	109 5/16 inch
	2,609 mm	3,029 mm	2,392 mm	2,777 mm
100 inch	128 7/8 inch	149 9/16 inch	118 3/16 inch	137 1/8 inch
	3,273 mm	3,798 mm	3,001 mm	3,483 mm
120 inch	155 inch	179 13/16 inch	142 3/16 inch	164 15/16 inch
	3,938 mm	4,568 mm	3,611 mm	4,190 mm
150 inch	194 1/4 inch	225 1/4 inch	178 3/16 inch	206 5/8 inch
	4,934 mm	5,721 mm	4,526 mm	5,249 mm
200 inch	259 5/8 inch	300 15/16 inch	238 3/16 inch	276 3/16 inch
	6,594 mm	7,644 mm	6,050 mm	7,014 mm
250 inch	325 inch	376 11/16 inch	298 1/4 inch	345 11/16 inch
	8,255 mm	9,567 mm	7,575 mm	8,780 mm
	Minimum = 1 5/16 x Screen size – 1 7/8 Maximum = 1 1/2 x Screen size – 1 7/8 Unit : inch		Minimum = 1 3/16 x Screen size – 1 7/8 Maximum = 1 3/8 x Screen size – 1 7/8 Unit : inch	
	Minimum = 33.21 x Screen size – 47.6 Maximum = 38.46 x Screen size – 47.6 Unit : mm		Minimum = 30.49 x Screen size – 47.6 Maximum = 35.31 x Screen size – 47.6 Unit : mm	

Note : Tolerance ±5 %

Image Position Adjustment

You can adjust the image position with the Lens Shift knob.

■ **Turn the Lens Shift knob to clockwise :**
The image goes up.

• Maximum range to throw up :
Bottom of the image correspond to the center of the Projection Lens.

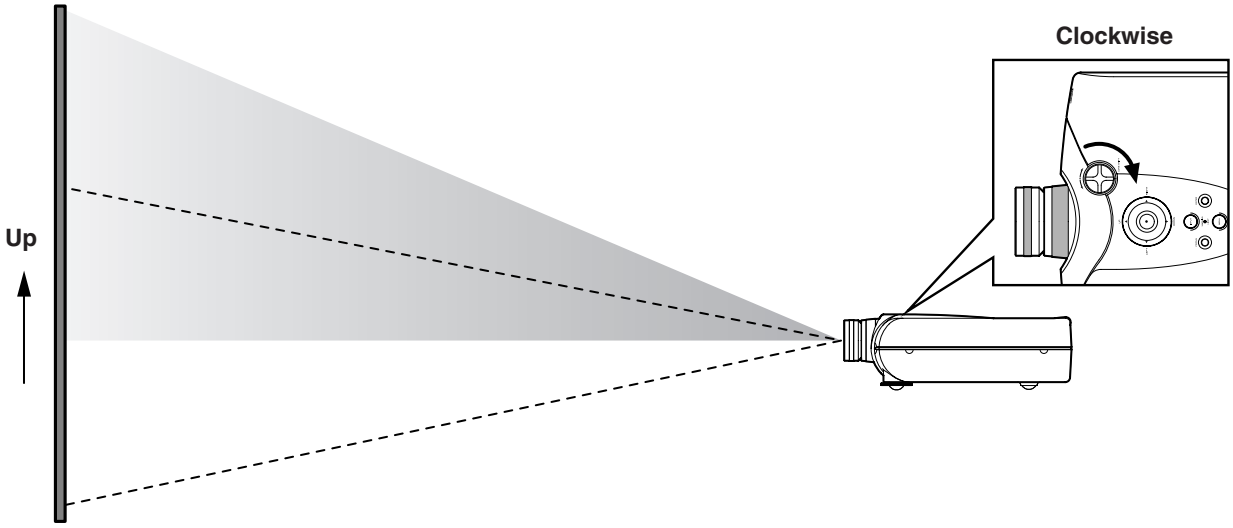

■ **Turn the Lens Shift knob to counterclockwise :**
The image goes down.

• Maximum range to throw down :
Top of the image correspond to the center of the Projection Lens.

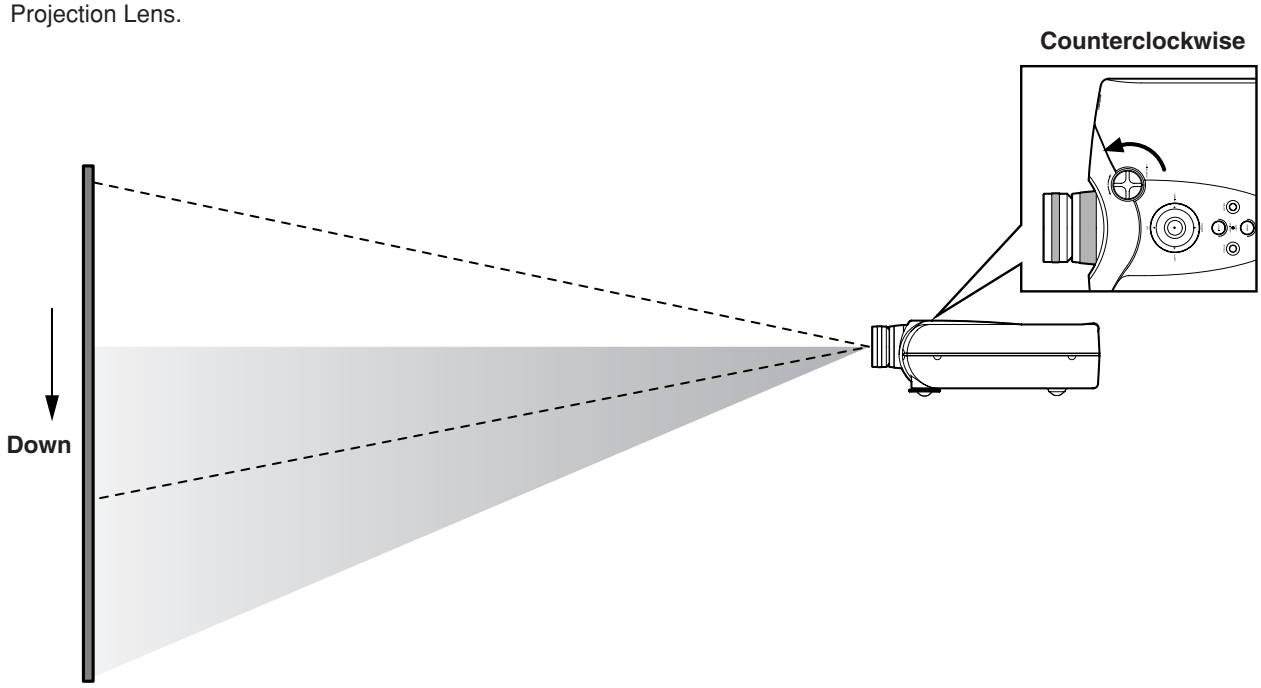

Advanced Setting

When the projecting image is a trapezoid, correct it in Keystone-V and/or Keystone-H in the Display Menu.

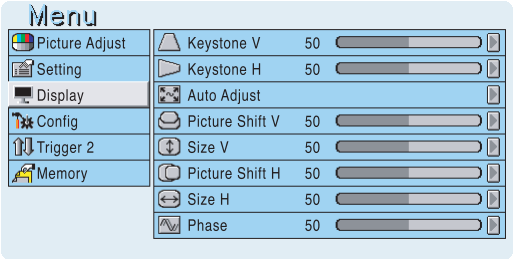

■ **Keystone-V(Electronic vertical keystone correction)**

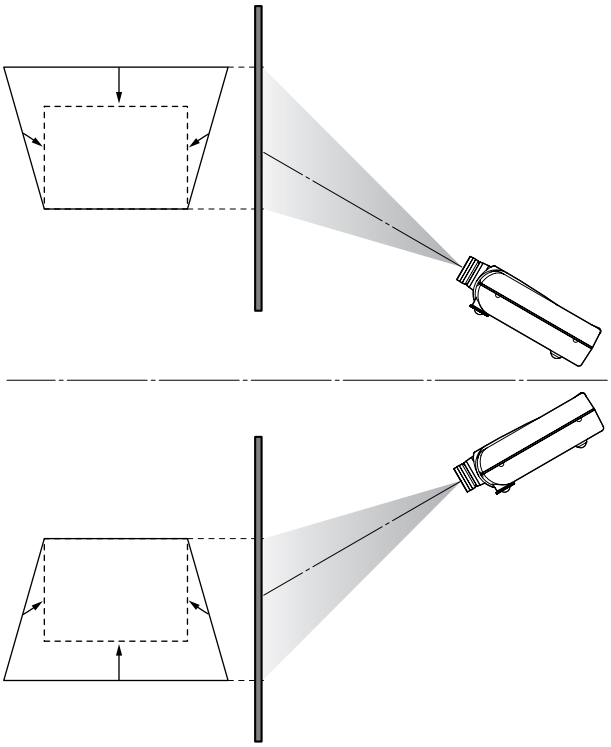

■ **Keystone-H(Electronic horizontal keystone correction)**

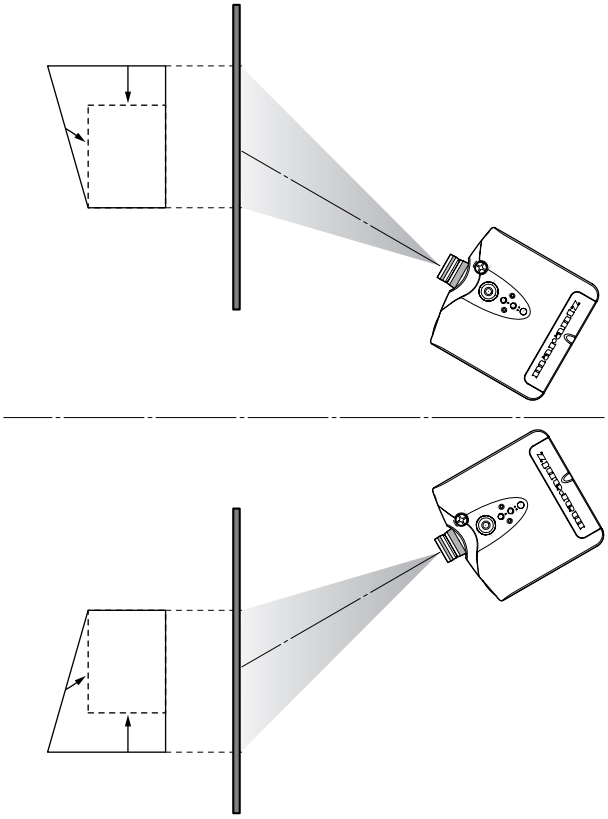

Note : Electronic horizontal keystone correction works properly when the lens shift position is at Full Up.

The Screen Images in a Wide screen (16:9)

- Press the ZOOM key, the NORMAL key or the FULL key on the remote controller for the 4:3 aspect ratio video source.
- Press the FULL key on the remote controller for 16:9 aspect ratio video source, such as 1080i, 1035i, and 720p video systems.
- Press the FULL key on the remote controller for the squeezed video source.

■ Original Source Image

16 : 9 video source

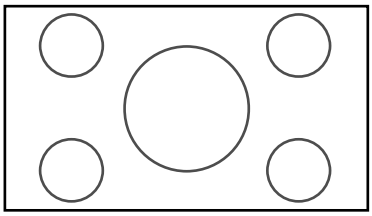

4 : 3 video source

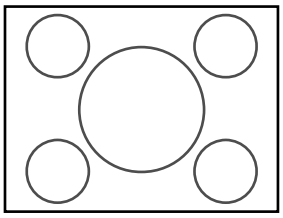

■ Full mode

The 16:9 squeezed image is displayed with the correct aspect.

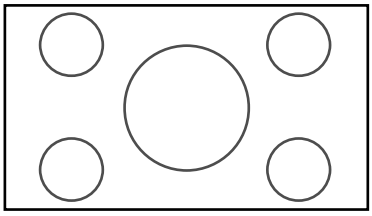

The 4:3 image is enlarged horizontally.

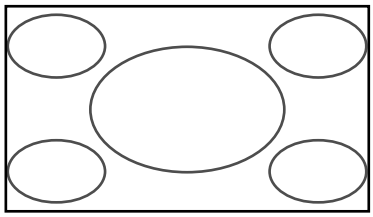

■ Normal mode

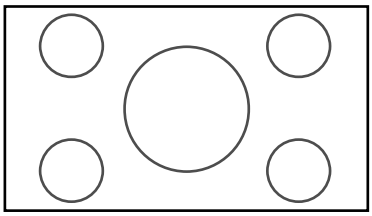

The picture with normal ratio 4:3 is displayed.

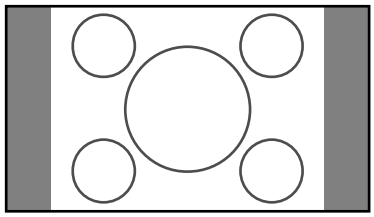

■ Zoom mode

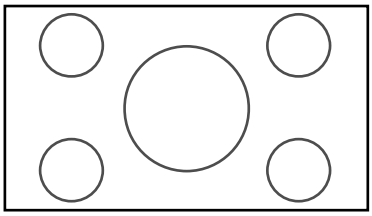

The picture with normal ratio 4:3 is enlarged vertically and horizontally (with same ratio) to the screen size

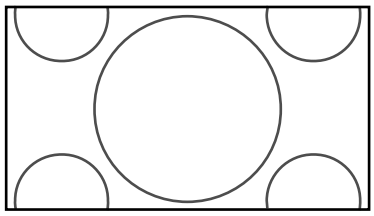

■ Through mode

Displays the image with the same resolution as the input video source except 1035i, 1080i, and XGA.

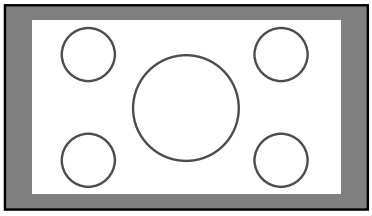

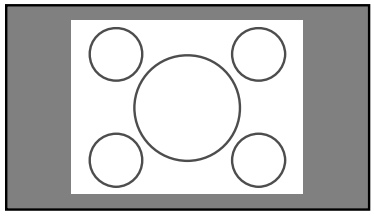

The Screen Images in a 4:3 screen

- Press the ZOOM key, the NORMAL key or the FULL key on the remote controller for the 4:3 aspect ratio video source.
- Press the FULL key on the remote controller for 16:9 aspect ratio video source, such as 1080i, 1035i, and 720p video systems.
- Press the FULL key on the remote controller for the squeezed video source.

■ Original Source Image

16 : 9 video source

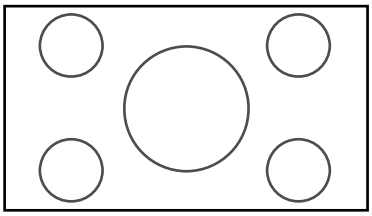

4 : 3 video source

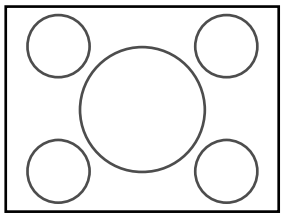

■ Full mode

The 16:9 squeezed image is displayed with the correct aspect.

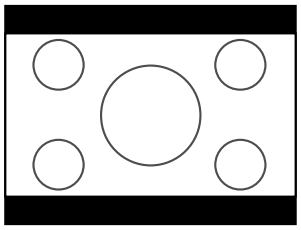

The 4:3 image is enlarged horizontally.

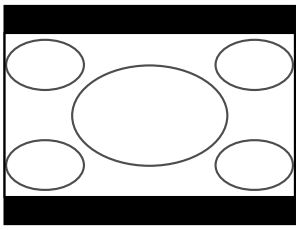

■ Normal mode

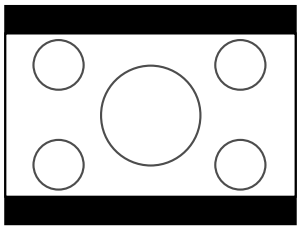

The picture with normal ratio 4:3 is displayed.

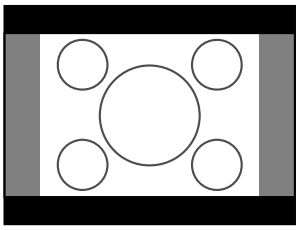

■ Zoom mode

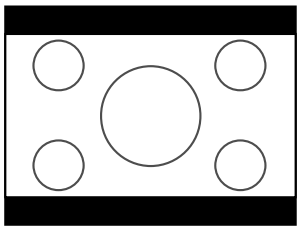

The picture with normal ratio 4:3 is enlarged vertically and horizontally (with same ratio) to the screen size

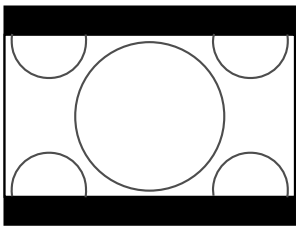

■ Through mode

Displays the image with the same resolution as the input video source except 1035i, 1080i, and XGA.

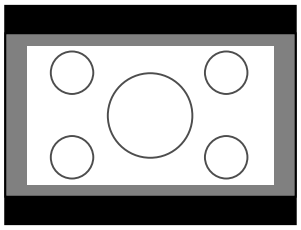

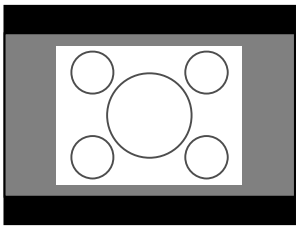

CONNECTION

When making connections be sure to:
- Turn off all equipment before making any connections.
- Use the proper cables for each connection.
- Insert the plug properly. Any plugs that are not fully inserted often generate a noise.

When pulling out a cable:
- Be sure to grab the plug, not the cable itself.

Connections with Video equipments

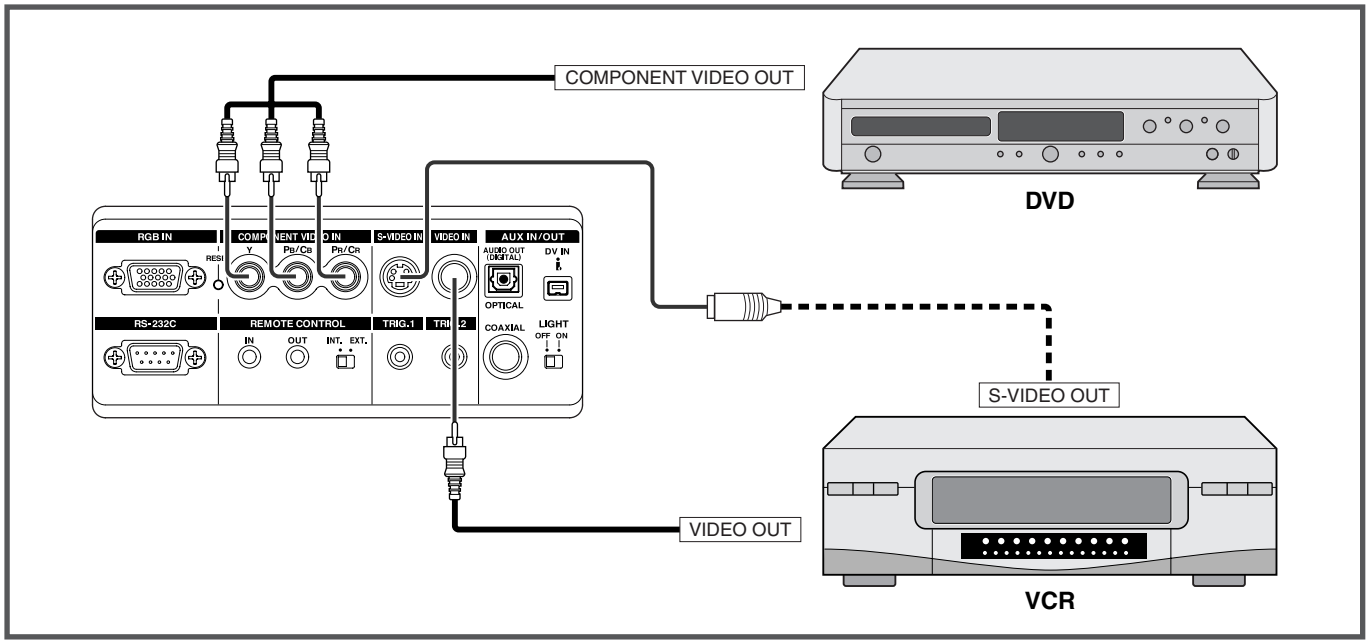

Connection with a HD-Video or PC

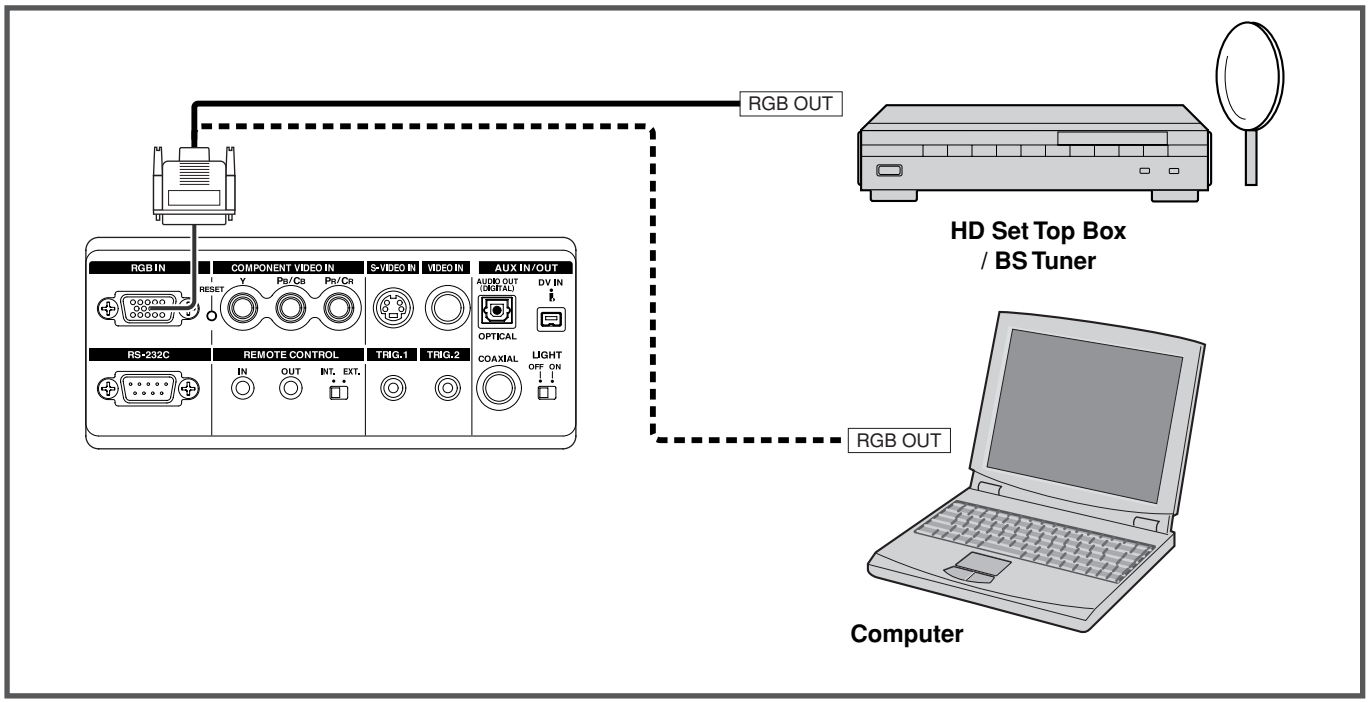

Connection with a DV camcoder

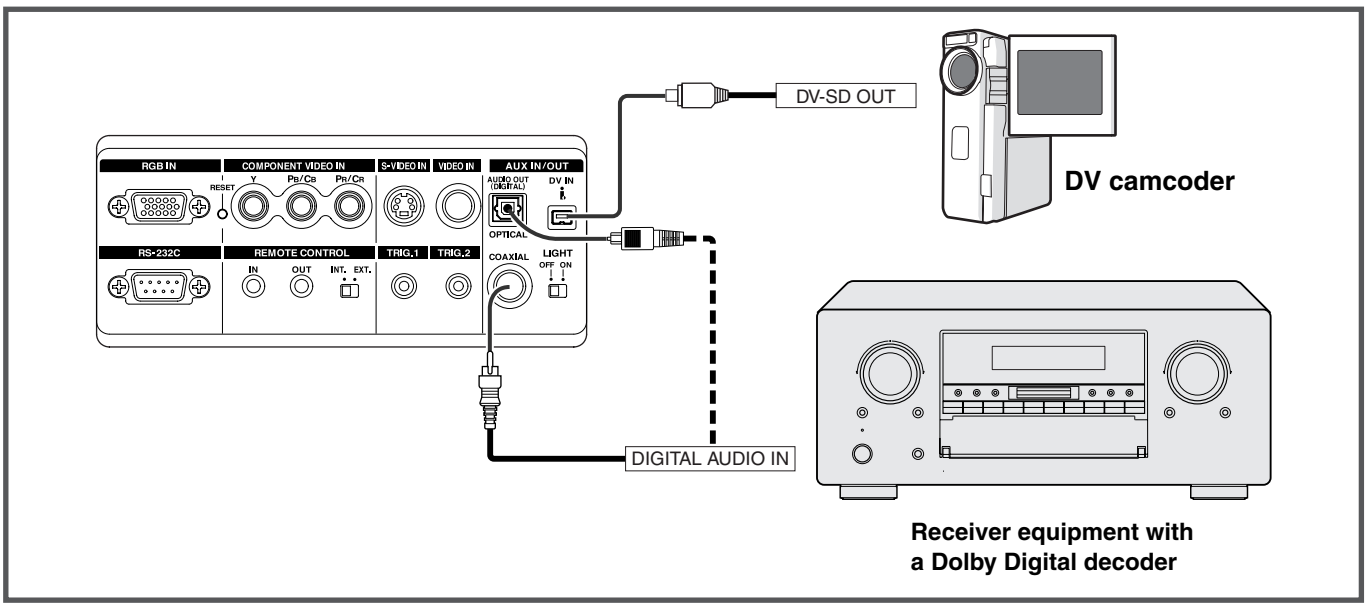

Note: DV IN connector is available for DV-SD format of i.LINK(IEEE1394).

Advanced connection

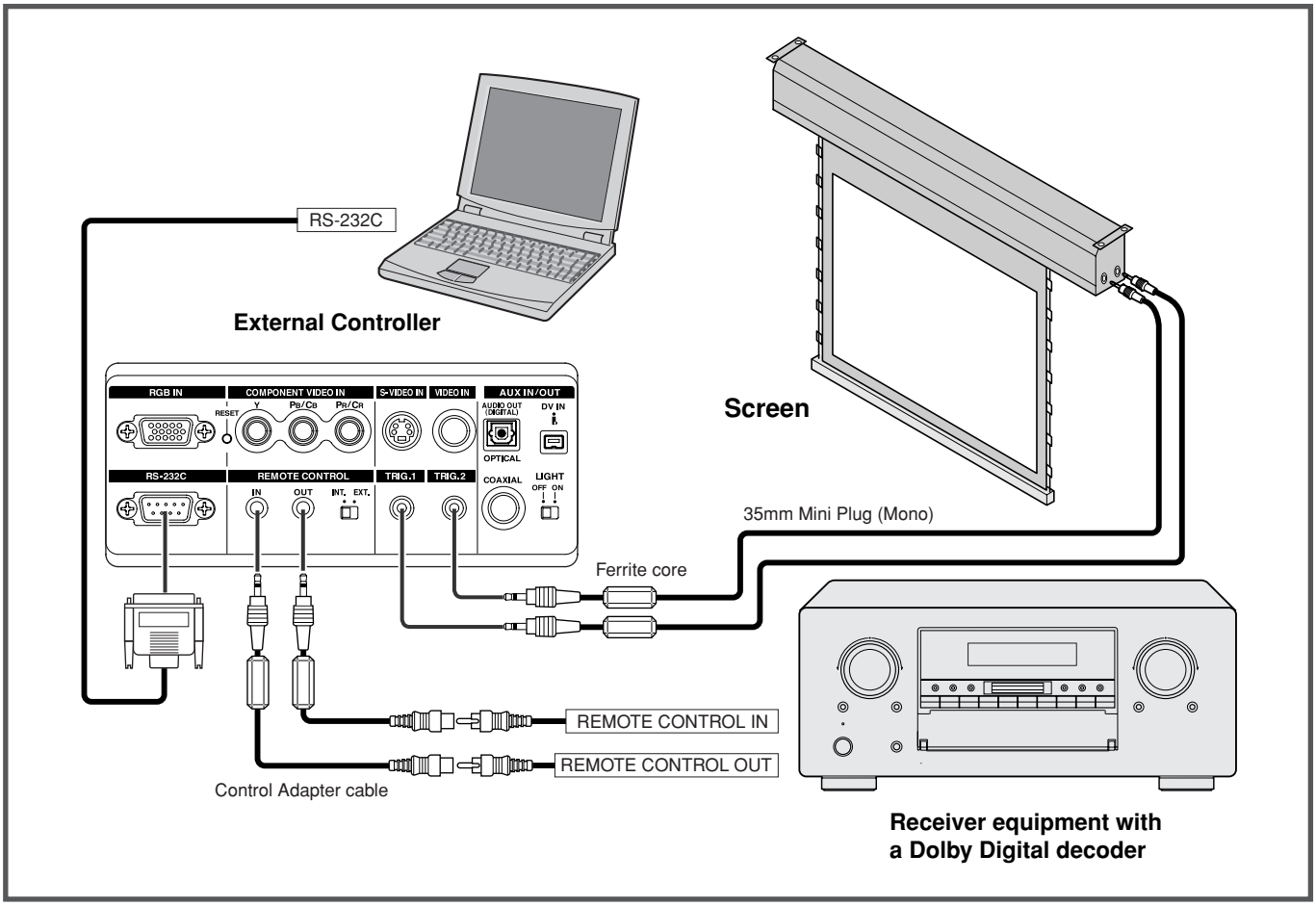

INITIAL SET UP

1. Connect the supplied AC power cord.
   The STANDBY indicator lights up and the projector goes into the standby mode.

2. Press the POWER ON key on the remote controller or the POWER key on the projector.
   The POWER indicator lights up.

3. Press the FOCUS key on the remote controller to display the FOCUS pattern and turn the Focus ring to make an adjustment. Adjust the focus for the sharpest image possible to obtain, using focus pattern.
   Press the FOCUS key again to clear off the pattern.

4. Turn the Zoom ring to adjust the size of the image.

5. Switch on the equipment connected to the projector. Press the INPUT SELECT key on the projector or the COMPONENT key, S-VIDEO key, VIDEO key, or RGB key on the remote controller.

TO TURN OFF THE POWER

1. Press the STANDBY key on the remote controller or the POWER key on the projector.

2. The fan continues to run for a while to reduce internal heat. The POWER ON indicator flashes in blue and no key will be active minute. After about one minute cooling has been provided, the unit turned off and the STANDBY indicator lights up.

OPERATIONS

Menu

Refer to the on-screen menu for making various adjustments and settings.

1. Press the MENU key.
   The MENU appears.

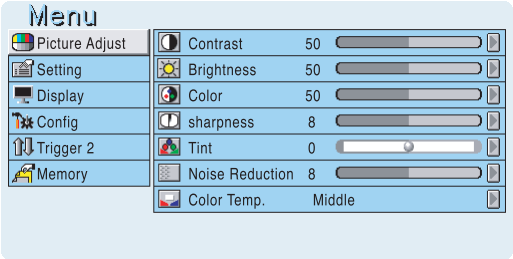

2. Use ▲ / ▼ / ◀ / ▶ keys to select a menu item.
3. Make adjustments in Picture Adjust, Setting, Display, Configuration, Trigger2, or Memory.

Picture Adjust

Adjust the picture to suit own preference by using the Picture Adjust feature.

■ **For a video signal input, the following adjustments can be made:**

ITEM	Adjustments		
Contrast	**0** ◀——▶ **99**		
	Weak		Strong
Brightness	**0** ◀——▶ **99**		
	Dark		Bright
Color	**0** ◀——▶ **99**		
	Light		Deep
Sharpness	**0** ◀——▶ **15**		
	Soft		Sharp
Tint	**R50** ◀——▶ **G50**		
	Purple		Green
Noise Reduction	**0** ◀——▶ **15**		
	Weak		Strong
Color Temp. (Color Temperature)	**L**	**M**	**H**
	Red		Blue

NOTE: The user cannot adjust Tint in Component signal (YCBCR/YPBPR).

– Contrast

Use ◀ / ▶ key to adjust.

Use ▲ / ▼ key to go back to the MENU.

– Color Temp.

H: Make white more blue.
M: Make white less blue. This setting is approximately 6500 degrees in Kelvin.
L: Make white more reddish.

Setting

The following settings can be made:

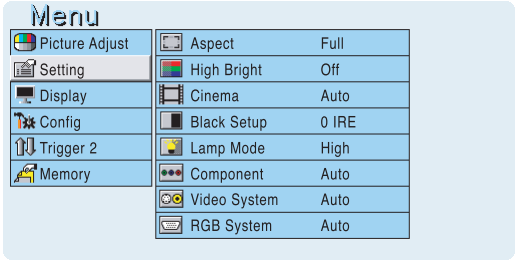

- ■ Aspect (Full, Normal, Zoom, Through)
- ■ High Bright (On, Off)
  High Bright ON: Display brightest image.
- ■ Cinema (Auto, Off)
  Cinema mode: The 3-2 pull down for NTSC and the 2-2 pull down for PAL
- ■ Black Setup (0IRE, 7.5IRE)
  Black level adjustment, for adjusting black level by a video source.
  NOTE: Not able to adjust Black Setup in IEEE1394 signal: AUX in signal.
- ■ Lamp mode (High/Low)
- ■ Component(Auto, NTSC, PAL, 480p, 540p, 576p, 720p, 1035i, 1080i)
- ■ Video System(Auto, NTSC, PAL, SECAM)
- ■ RGB System(Auto, NTSC, PAL, 480p, 540p, 576p, 720p, 1035i, 1080i, VGA)

NTSC(NTSC-3.58)
: Conventional analog broadcasting used mainly in USA, Canada, Taiwan, Korea, and Japan.

PAL(PAL-4.43)
: Conventional analog broadcasting used mainly in United Kingdom and Germany.

SECAM : Conventional analog broadcasting used mainly in France and Russia.

480p : Standard digital broadcasting
540p : Special digital broadcasting (for example: RCA DTC100)
576p : Standard digital broadcasting
720p, 1080i : High Definition digital broadcasting
1035i : Japanese "Hi-Vision" broadcasting

Display

■ **The following adjustments can be made:**

ITEM	
Keystone-V (Electronic vertical keystone correction)	⟷
Keystone-H (Electronic horizontal keystone correction)	⟷
Auto Adjust	Yes / No
Picture Shift V	Down ⟷ Up
Size V	Small ⟷ Large
Picture Shift H	Left ⟷ Right
Size H	Small ⟷ Large
Phase	Backward ⟷ Forward

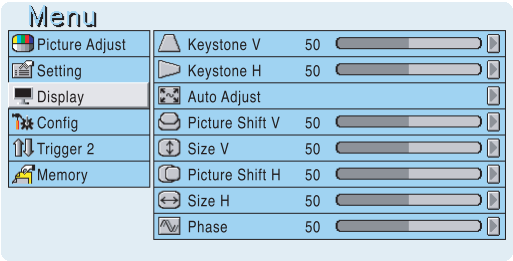

– Keystone H, V

Adjust the trapezoid image to a rectangle image.

– Auto Adjust

Yes : For RGB IN signal, Picture Shift V and H, Size V and H, and Phase are adjusted automatically.

No : If something wrong with AUTO Adjust, select No, and adjust Size V, Size H, Picture Shift H, Picture Shift V, and/or Phase.

– Picture Shift V, H

Adjust the position of the picture. H adjusts the horizontal position of the picture. V adjusts the vertical position of the picture.

– Size V, H

Adjust the vertical and horizontal size of the picture.

– Phase

Adjust the phase of the DMD™ dots and the computer signal input from the RGB IN. Adjust the picture to where it looks clearest.

Configuration

The following adjustments can be made:

- ■ OSD Position (16:9 / 4:3 / Through)
- ■ Language (English/ German/ French/ Spanish/ Portuguese/ Italian)
- ■ Ceiling (On/Off)
  ON: The picture is reversed horizontally and vertically.
- ■ Rear (On/Off)
  ON: The picture is reversed horizontally.
- ■ Reset Lamp Life (Yes/No)
- ■ Reset All (Yes/No)

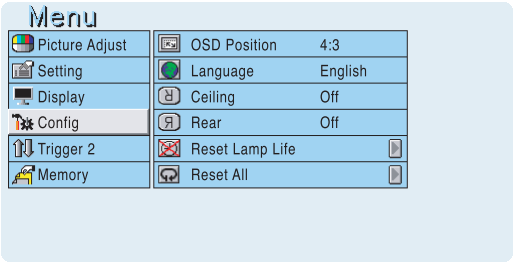

– OSD Position (16:9 / 4:3 / Through)

Select OSD position from 16:9, 4:3, or Through.

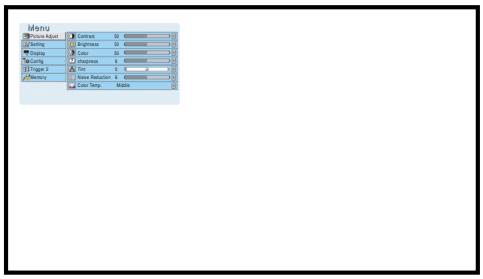

16 : 9 OSD position

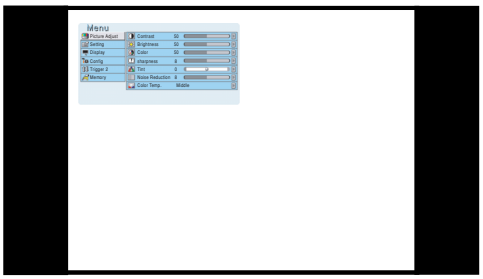

4 : 3 OSD position

Through OSD position

– Reset Lamp Life

When replace the lamp unit, before the Lamp Life becomes "0" hours need to reset lamp life.
When the user selects “Yes”, the following message appears:

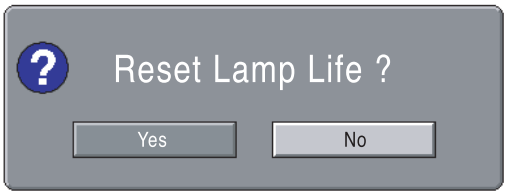

Again, select “Yes”, and press the ENTER key. Then the lamp life is initialized.

– Reset All

All settings goes to the factory default settings except the lamp life.
When the user selects “Yes”, the following message appears:

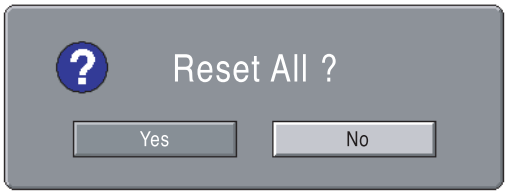

Again, select “Yes”, and press the ENTER key.

Trigger2

Select 12V DC or 0V from on and off at each aspect mode.
Full, Normal, Zoom, and Through.

On: Output DC 12V.
Off: No output.

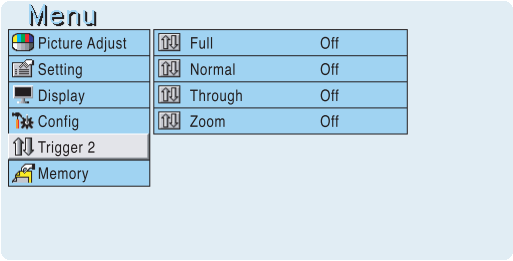

This allows such as a powered dual aspect screen according to the aspect mode.

Memory

Recall the stored memory for preference. The unit has three picture modes: THEATER, STANDARD, and DYNAMIC. Each picture mode has three picture memories.

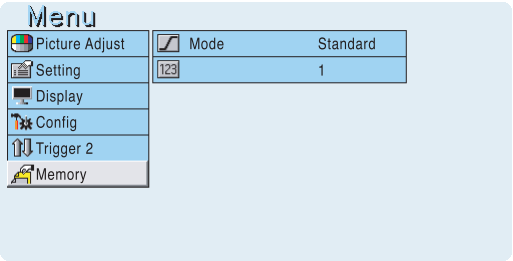

– Store memory

Select Memory mode from THEATER, STANDARD, or DYNAMIC using the Remote Controller or in the above menu. Display Picture Adjust menu. Adjust any items, and these figures are automatically stored.

Lamp Life and Replace Lamp

Lamp Life

Display the remaining lamp life by pressing the INFO key on the remote controller.

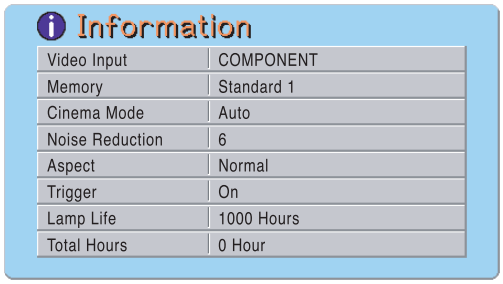

Notes:

- When the Lamp Life becomes less than 100 hours , it is recommended to replace the lamp unit. A lamp may be worn out when the Lamp Life becomes less than 100 hours .
- The projector is designed not to turn on after the lamp use has exceeded 2000 hours. (Lamp Life 0 HOUR)
  If the projector is in use, it will turn off.

► When the lamp life becomes less than 100 hours and the unit is still on, the remaining lamp life is displayed on the screen automatically.

► When the lamp life becomes less than 5 hours, the remaining lamp life is displayed on the screen .

To clear above, press the MENU key.

► When the lamp life has expired (Lamp Life 0 HOURS), the unit will be immediately turned off, and the WARNING indicator will light up in red.

Replacing the lamp unit with new one, then use the following procedure to reset (initialize) the lamp life.
Refer to "Replacing Lamp Unit".

1. Unplug the power cord.
2. Wait about one minute and reconnect the power cord.
3. Press the POWER key. The following message appears for 120 seconds.

4. Select “Yes”, using the ◀ / ▶ keys.
5. Press the ENTER key. The lamp life indicator is now initialized.

MAINTENANCE

Replacing Lamp Unit

CAUTION:
- Do not touch the lamp and the lamp unit immediately. It will be extremely hot. Allow at least one hour for the lamp to cool down before handling.
- Do not loosen any screws except for those mentioned below.
- The lamp may break if handled improperly.
- Do not use other than a Marantz replacement lamp unit.

■ How to replace the Lamp Unit

WARNING:
- The lamp itself may get hot. Be careful when handling.

1. Press the POWER key to turn the projector off.
2. Unplug the AC power cord.
3. Wait at least one hour for the lamp and lamp unit to cool down.
4. Read the caution and warning labels on the unit.

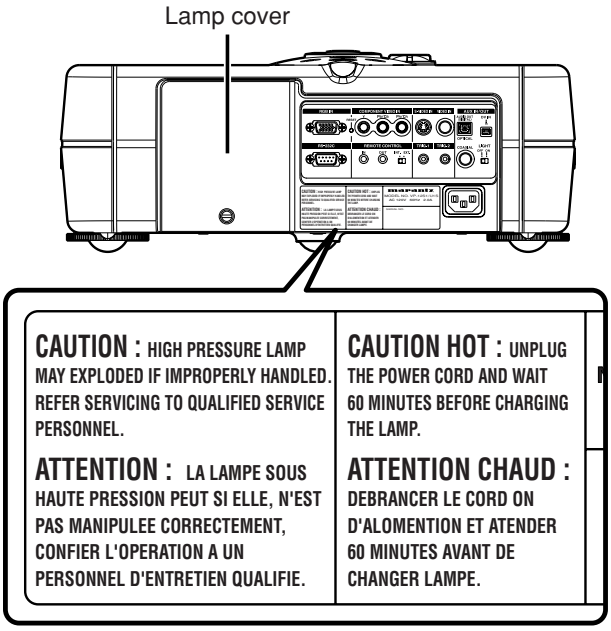

5. Loosen the lamp cover securing screw.
6. Remove the lamp cover.
7. Loosen the two lamp housing screws.
   (This projector has a safety switch.)
8. Hold the handle then pull the lamp unit to remove.
9. Install the new lamp unit.
10. Secure the lamp unit with the two screws.
11. Close the lamp cover and secure it with a screw driver.

Cleaning the lens

If the lens becomes dirty or smudged, clean it with a soft dry cloth. Use optical lens cleaners only which are approved for eyeglasses or cameras. Do not use a dampen cloth, detergent solution, or thinner. It may damage the lens and remain as stains.

Replacement parts

When replacement parts are required, be sure to inform a Marantz authorized service center. Use only replacement parts specified by Marantz. Unauthorized substitutions may result in fire, electric shock, or other hazards.
And, the warranty may not be guaranteed.

Optional accessories

- ■ **Lamp Unit : LU-12VPS1**
- ■ **Ceiling Mount KIT : RM-12VPS1**
- ■ **Lens : LN-12VPS1**

CAUTION:
- For ceiling installation, consult with the Marantz Authorized dealer.

TROUBLESHOOTING

In case of troubles, check the following before calling for service:

1. Are the connections made properly ?
2. Are you operating the unit properly, following the instructions ?

If the unit does not operate properly, check the items shown in the following table.
If any trouble cannot be solved by the recommendation below, malfunction of the internal circuitry is suspected; immediately unplug the AC power cord and contact Marantz dealer or service center.

Symptom	Possible Cause	Remedy
No power	AC power cord is not connected correctly.	Connect the AC power cord properly.
	Lamp cover is not closed correctly.	Close the cover properly.
Image is not displayed.	A signal cable is not connected correctly.	Connect a signal cable properly.
	Selected input is incorrect.	Select the correct input source .
	The picture mute is active.	Press the MUTE key to release the mute.
Poor color.	Picture is not adjusted properly.	Adjust the picture in the MENU mode.
Picture is too dark.	Lamp life is running short.	Replace the lamp.
	Contrast or brightness is not adjusted properly.	Adjust contrast or brightness properly.
Picture is not clear.	Picture is out of focus.	Adjust the focus.
	Condensation occurs on the lens.	Run the projector for about two hours.
Picture rolls.	A signal cable is not properly connected.	Connect a signal cable properly.
The Remote Controller does not work.	Batteries are exhausted.	Replace batteries.
	The distance to the unit is too far.	Reduce the distance between the unit and the remote control.
	IR sensor on unit is obstructed.	Remove any obstacles.
	The “EXTERNAL” position on the connector panel is selected.	Select the “INTERNAL” position.

Notes:
- If the lamp still does not function after the replacement and initialization of the lamp life, contact Marantz authorized dealer, or service center.

ERROR MODE

WARNING/LAMP indicator, POWER ON indicator, and STANDBY indicator diagnose error mode of the projector as follows.

Error mode	Indicators			Possible Cause	Recommendation
	WARNING /LAMP	POWER ON	STANDBY		
Lamp cover	ON	OFF	Flashing	The lamp cover is not closed properly firmly	Close the cover correctly.
Lamp	ON	OFF	OFF	The lamp has failed, or the lamp is completely worn out.	Replace the lamp and reset lamp life.
Lamp temperature	Flashing	ON	Flashing	Temperature around the lamp unit becomes unusually high.	Check to see that nothing is blocking the ventilation holes, and leave off the unit for about an hour.
Power supply	Flashing	ON	OFF	Temperature around the power supply becomes unusually high.	
Fan	Flashing	OFF	ON	The fan inside the projector has stopped.	

ON SCREEN MESSAGE

Use the list below to check the message displayed on the screen.

Message	Meaning	Remedy
NO SIGNAL	No input signal.	Properly connect the cables.
REPLACE LAMP!	The lamp has reached the end of its life.	Replace the lamp and reset lamp life.
OUT OF RANGE	Improper signal feed to the projector.	Adjust resolution, V(Hz) : refresh rate of the equipment, referring to the Timing Chart.

SPECIFICATIONS

■ Optical characteristics

Panel	0.85inch 16:9 1,280 x 720 pixels Digital Micromirror Device™
Lamp	Super High Pressure 150W
Lens	f: 26.5 to 30.7 / F: 3.0
Projection size	40 to 250 inches
Light output	700 ANSI LUMEN typical

■ INPUT/OUTPUT

VIDEO IN	RCA x 1 NTSC-3.58/PAL-4.43/SECAM Composite video 1.0V_{p-p}/75 Ohm
S-VIDEO IN	S-Connector x 1 NTSC-3.58/PAL-4.43/SECAM S-Video
COMPONENT IN	RCA x 3 Y, C_B/P_B, C_R/P_R
RGB/HD IN	D-sub M 15 pin x 1 Analog RGB HD:1080i, 720p, 480p
REMOTE CONTROLLER IN	Mini jack type x 1
REMOTE CONTROLLER OUT	Mini jack type x 1
AC IN	3 Prong Grounding Type
TRIG.1 OUT, TRIG.2 OUT	Mini Jack x 2 Output: DC12V or 0V
RS232C	RS232C receptacle plug x 1
AUX. IN	IEEE1394 AV receptacle plug x 1
COAXIAL Digital AUDIO OUTPUT	COAXIAL audio data output x 1
OPTICAL Digital AUDIO OUT	OPTICAL audio data output x 1

■ GENERAL

Power requirement	AC 100-120V / 220-240V, 50/60 Hz
Power consumption	<250 W
Standby consumption	<3.3 W
Chassis isolation	Class-1
Safety	UL6500 CSA E60065 EN60950 J60065 IEC60950
EMC	FCC Part-15 Class-B EN55022 Class-B EN55024 EN61000-3-2,3
Dimensions	15 15/16(W) x 18 9/16(D) x 6 1/8(H)inch 405(W) x 471(D) x 155(H)mm
Net weight	13 kg
Operating Temperature	5 to 35 °C
Operating humidity	30 to 85%
Storage Temperature	– 20 to 60 °C
Storage humidity	30 to 85%
Accessories	• Lens cap x 1 • Remote controller x 1 • Batteries x 2 • AC power code (only for 125V) x 1 • User Guide x 1 • Control Adapter cable (Mini jack to RCA) x 1 • Ferrite cores x 2

Specifications may be subjected to change without any prior notice.

■ **Timing chart**

System	Resolution	V (Hz)	H (KHz)	Scan
NTSC	768x240	59.94 / 60	15.73	I
PAL-B/G	960x287.5	50	15.63	I
SECAM	960x287.5	50	15.63	I
480/60p	720x480	59.94 / 60	31.5	P
576/50p	720x576	50	31.3	P
1035/60i	1920x518	59.94 / 60	33.8	I
1080/60i	1920x540	59.94 / 60	33.8	I
1080/50i	1920x540	50	28.1	I
1080/48i	1920x540	48	27.0	I
720/60p	1280x720	59.94 / 60	45.0	P
720/50p	1280x720	50	37.5	P
720/48p	1280x720	48	36.0	P
540/60p	1920x540	59.94 / 60	33.8	P
640x350#1	640x350	70	31.5	P
640x350#1	640x350	85	37.9	P
640x400#1	640x400	70	31.5	P
640x400#1	640x400	85	53.7	P
640x480	640x480	60	31.5	P
640x480#1	640x480	72	37.9	P
640x480#1	640x480	75	37.5	P
640x480#1	640x480	85	43.3	P
800x600	800x600	56	35.2	P
800x600	800x600	60	37.9	P
800x600#1	800x600	72	48.1	P
800x600#1	800x600	75	46.9	P
800x600#1	800x600	85	53.7	P
1024x768	1024x768	43	35.5	P
1024x768	1024x768	60	48.4	P
1024x768#1	1024x768	70	56.5	P
1024x768#1	1024x768	75	60.0	P
1024x768#1	1024x768	85	68.7	P

Note: The systems marked #1 are not displayed properly.

I : Interlaced signal
P : Progressive signal

DIMENSIONS

■ TOP

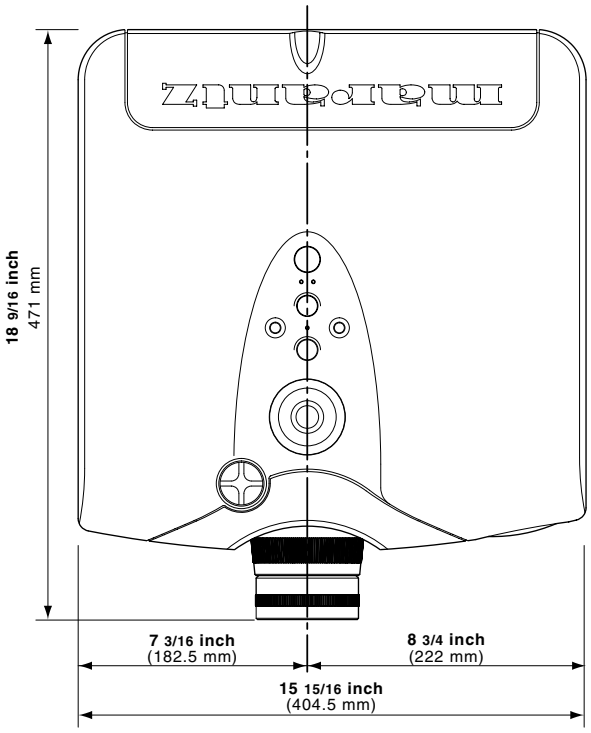

■ FRONT

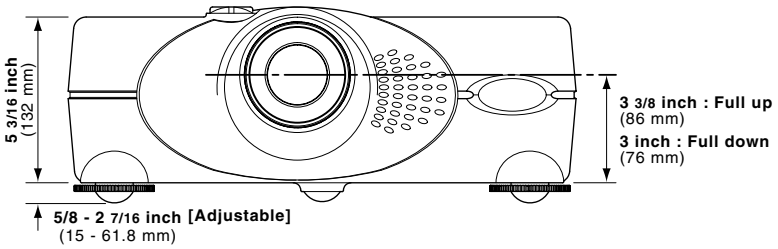

■ BOTTOM

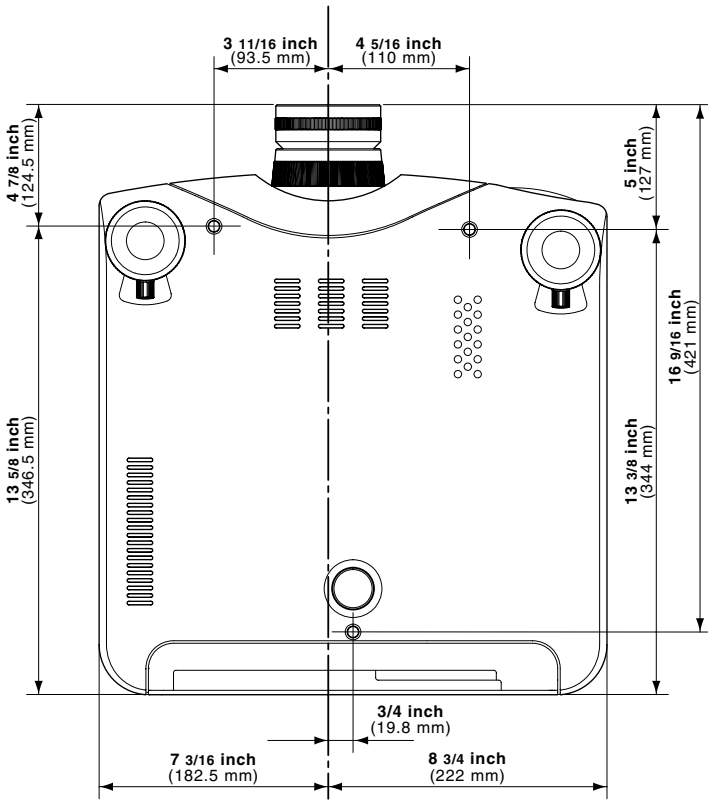

COUNTRY	COMPANY	ADDRESS
ALGERIE	Azur 2000	8, Lotissement Ben Hatadi, Alger, Algerie
ARMENIA	NGYIG Ltd.	47 A/75 St. Lalaiants, 375000 Yerevan, Armenia
AUSTRALIA	Jamo Australia Pty. Ltd.,	24 Lionel Road, Mt. Waverley, VIC 3149, Australia
AUSTRIA	Huber & Prohaska GmbH	Taborstraße 95 / Ladestraße 1, Gebäude Hangartner, A-1200 Wien, Austria
BAHREIN	Ambassador Stores	P.O. Box 237,141, Government Avenue, Manama,Bahrein
BANGLADESH	Target	1078, Ramjoy Mohanja Lane Asadgonj, Chittagong 4000, Bangladesh
BELGIUM	Van der Heyden Audio N.V.	Brusselbaan 278, 9320 Erembodegem, Belgium
BULGARIA	Ariescommerce GmbH	Makedonia Blvd. 16, 1606 Sofia, Bulgaria
CANADA	Lenbrook Industries Limited	633 Granite Court, Pickering, Ontario
CHINA	Guang Chang Audio International Co., Ltd.	No.38 Yushan Road, ShiQiao, Pan Yu, Guang Dong, China
CYPRUS	Empire Hifi systems Ltd.	P.O. Box 5604, Nicosia, Cyprus
CZECH REPUBLIC	Audio International	Sokolska 41, 67902 Rajecko, OKR,Blansko, Czech Republic
DENMARK	Audio Nord	Dali Allé 1, 9610 Noerager, Denmark
DUBAI	V.V.& SONS	P.O. Box 105, Dubai, U.A.E.
EGYPT	Solimco	9, El Attibaa St. Doki, Cairo, Egypt
ESTONIA	HiFi Club Estonia	Ehte 4, 90503 Haapsalu, Estonia
F.Y.R.O.M.	T.P. KODI	ul.Cedomir Kantargiev 21a, Skopje, Former Yugoslavian Republic of Macedonija
FINLAND	Audio Nord	Uudenmaankatu 4-6, Helsinki SF-00120, Finland
FRANCE	Marantz France	A division of Marantz Europe B.V., P.O. Box 301, 92 156 Suresnes Cedex, France
GERMANY	Marantz Deutschland	Hakenbusch 3, 49078 Osnabrück, Germany
GREECE	Adamco S.A.	188, Hippocratous Street, 11471 Athens, Greece
HEADQUARTERS EUROPE:	Marantz Europe B.V.	Building SFF-2, P.O. Box 80002, 5600 JB Eindhoven, The Netherlands
HONG KONG	Marantz Asia Ltd.	Unit 1706, Metroplaza II, 223 Hing Fong Road, Kwai Fong, N.T., Kowloon, Hong Kong
HUNGARY	Infovox Ltd.	Terez Krt.31, 1067 Budapest, Hungary
ICELAND	ID Electronics Ltd.	Armula 38, 108 Reykjavik, Iceland
INDIA	NOVA Audio Private	8,Punam Co-op.Society 29/30 Road#5, Union Park MUMBAI 400052, India
IRAN	Home Co.	5th floor no 878 Philips Building Enghelab ave, P.O. 11365/7844 Tehran, Iran
IRELAND	Marantz Ireland	Clonskeagh, Dublin 14, Ireland
ISRAEL	Elmor Ltd.	52 Heh Beiyar Street, Kikar Hamedina, Tel Aviv, Israel
ITALY	Marantz Italy	Via Casati 23, 20052 Monza (Milano), Italy, Servizio Consumatori 1678-20026, Numero Verde
IVORY COAST	Hifivoir	B.P. 2428, Abidjan 01, Ivory Coast
JAPAN	Marantz Japan Inc.	35-1 Sagami Ohno 7-Chome, Sagamihara-shi, Kanagawa 228-8505, Japan
KOREA	Mk Enterprises Ltd.	121-210, 2F Shinhan Bldg., 247-17 Seokyo-dong, Mapo-ku, Seoul, Korea
KUWAIT	alAlamiah Electronics Intl.	P.O. Box 8196, Salmiah 22052, Kuwait
LATVIA	Ace Ltd.	61, LacPlesa Str., Riga LV 1011, Latvia
LEBANON	AZ Electronics S.A., 1,	P.O. Box 11 2833, Beirut, Lebanon
LITHUANIA	Accapella Ltd.	Ausros, Vartu G/5, Pasazo SKG., 2001 Vilnius, Lithuania
MALAYSIA	Wo Kee Hong Electronics Sdn. Bhd.	Suite 8.1, Level 8, Menara Genesis, No. 33, Jalan Sultan Ismail, 50250 Kuala Lumpur, Malaysia
MALTA	Doneo Co Ltd.	78 The Strand, Sliema SLM07, Malta
MAURITIUS	SKR Electronics Ltd.	P.O. Box 685, Bell Village, Port Louis, Mauritius
MILITARY MARKET EUROPE	PASCO GmbH	PO BOX 1280, Sandhausen 69200, Germany
NETHERLANDS	Marantz Domestic Sales	A division of Marantz Europe B.V., Building SFF2, P.O. Box 80002, 5600 JB Eindhoven, The Netherlands
NEW ZEALAND	Wildash Audio Systems	14 Malvern Road, Mt. Albert, Auckland, New Zealand
NORWAY	Audio Nord	Sandkerveien 64, Oslo 0483, Norway
OMAN	Mustafa & Jawad Trading CO.	P.O. Box 1918, Ruwi, Oman
POLAND	Philips Polska Sp. z.o.o.	Al.Jerozolimskie 195b, 02 222 Warszawa, Poland
PORTUGAL	Corel2	Comércio de Electrónica Lda., Av. Luís Bívar, No 85 A, 1050 Lisboa, Portugal
PROFESSIONAL EUROPE	Marantz Professional Products	Kingsbridge House, Padbury Oaks, 575-583 Bath Road, Longford, Middlesex UB7 0EH, U.K.
PROFESSIONAL U.S.A.	Marantz Professional Products	Distributed by: Superscope Technologies Inc., 1000 Corporate Blvd. Ste.D, Aurora, Illino
QATAR	Almana & Partners W.W.L.	P.O. Box 49, Doha, Qatar
REUNION	Vision +	180 Rue du Marechal Leclerc, 97400 Saint Denis, Ile de la Reunion
ROMANIA	Nova Music Entertainment	5, Zagazului Str. Bl.1G,apt.18, sector 1,Bucharest, Romania
RUSSIA	Absolute Audio	7/2, Montazhnaya Street, 107497 Moscow, Russia
SAUDI ARABIA	Adawlia Univ. Electr. Apl	P.O. Box 2154, Alkhobar 31952, Saudi Arabia
SINGAPORE	Wo Kee Hong Distribution PTE Ltd.	130 Joo Seng Road, #03-02 Olivine Building, Singapore 368357
SLOVAKIA	Bis Audio s.r.o.	Nam. SNP 10, 96001 Zvolem, Slovakia
SLOVENIA	Bofex	Smartinska 152, HALA V/3, 61000 Ljubljana, Slovenia
SOUTH AFRICA	Coherent Imports (PTY) Ltd.	P.O. Box 1614, Alberton, 1450, South Africa
SPAIN	Marantz Spain	Martinez Villergas 2, Apartado 2065, Madrid 28027, Spain
SRI LANKA	The listening Room	Mezzanine Floor, The Landmark 385, Galle Road, Colombo - 3, Sri Lanka
SWEDEN	Audio Nord	Almedalsvagen 4, Gotenborg 402-23, Sweden
SWITZERLAND	Sound Company AG	Postfach, 8010 Zürich, Switzerland
SYRIA	Hamzeh & Partners	Hafez Ibrahim Str. No 117, Damascus Shalan, Syria
TAHITI	Covecolor	Av. Prince Hinoi, Cours de l'union sacré, P.O. Box 2334, Papeete, Tahiti
TAIWAN	Pai-Yuing Co. Ltd.	6th No 148 Sung Kiang Road, Taipei 10429, Taiwan R.O.C.
THAILAND	MRZ Standard Co. Ltd.	746-750 Mahachai Road, Wangburapa, Bangkok 10200, Thailand
TUNESIA	Societe EDEVIG	40, Avenue du Golfe Arabe, El Menzah, 1004, Tunesia
TURKEY	Türk Philips Ticaret A.S.	Yukari Dudullu Organize sanayi Bolgesi, 2.Cadde no.28, 81260 Umraniye-Istanbul, Turkey
U.K.	Marantz Hifi UK Ltd.	Kingsbridge House, Padbury Oaks, 575-583 Bath Road, Longford, Middlesex UB7 0EH, U.K.
U.S.A.	Marantz America Inc.	1100 Maplewood Drive Itasca, IL 60143, U.S.A.
YUGOSLAVIA	ITM Company	Omladinskih Brigada 86, 11070 Belgrade, Yugoslavia
EXPORT	Marantz Domestic Sales	A division of Marantz Europe BV,Building SFF2, P.O. Box 80002, 5600 JB Eindhoven, The Netherlands
WWW.MARANTZ.COM		

marantz® is a registered trademark.

Printed in Japan

01/11 MITf 413V851250