myprojectorlamps.com

The most trusted, dependable name in projector lamp sales.

http://www.myprojectorlamps.com

http://www.myprojectorlamps.ca

http://www.myprojectorlamps.eu

The following projector manual has not been modified or altered in any way.

Liesegang

Bedienungsanleitung
User Manual

RX 3600+

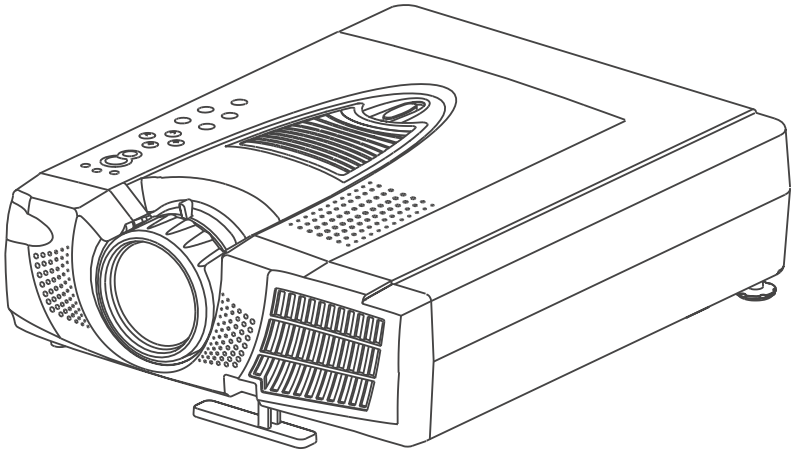

Liesegang Unternehmensgruppe

1. Before use **2**

2. Scope of delivery / accessories / disposal of packing material **8**
2.1 Scope of delivery 8
2.2 Accessories 9
2.3 Disposal of packing material 9

3. Views and parts of the projector **10**
3.1 Top, front and side view of the unit 10
3.2.Rear view 10
3.3 Bottom view 10

4. Installation **11**
4.1 Positioning 11
4.2 Projection distance and image size 11
4.3 Projection Table 11
4.4 Ventilation 12
4.5 Ceiling installation 12

5. Connections **13**
5.1 Connecting a computer or a notebook PC 13
5.2 Using the remote control as the PC mouse 13
5.2 Connecting video equipments 14

6. Starting operation 16

7. Using the remote control **19**
7.1 Buttons on the remote control 19
7.2 Inserting batteries before operating 19
7.3 Using “General Function Keys” on the remote control 19
7.4 Using the “Mouse Keys” as wireless PC mouse 20
7.5 Using the “Hot Keys” 20
20
8. Menu operation
8.1 VGA and HDTV (YPrPr) input menu **21**
8.2 Factory Reset 21
8.3 Video input menu 22
23
9. Indicators lighting or flashing
9.1 Starting operation **26**
9.2 Shutting off the projector 26
9.3 Abnormal status 26
26
10. Cleaning and replacing the air filter
26
11. Replacing the lamp cartridge
27
12. Specifications of LCD projector
28
13. FCC Compliance Statement for United States users
29
14. Service Hotline
29
15. Procuct Manufacturer
29
Glossar
30
Warranty Terms
31

Before use

The following notes are intended to be a help for handling the product in accordance with its designated purpose.

Caution:

A person could be killed or injured if the wrong operation is done by ignoring this indication.

Do not install this unit in an unstable place.

Avoid placing it in an unstable place such as a weak base, an inclined floor, etc. This may cause the projector to drop or fall over, resulting in injury.

Do not remodel this unit.

Do not remodel this unit. It may cause a fire, an electric shock, etc.

Never use the projector in a humid environment.

Never use the projector in a humid environment, e.g. bathroom or close to cookers or humidifiers. This could cause a fire, an electric shock, etc.

Only connect to the specified mains voltage.

The projector must only be operated with the alternating current specified on the identification plate. Please immediately check whether the supplied mains connection cable coincides with wall outlets at the installation location.

Do not forget the protective conductors.

Only use extension leads or cables with a minimum cross-section of 1.5 mm² and protective conductors.

Do not apply any shock.

If you drop this unit or if the casing is broken, turn off the power switch, disconnect the power plug and contact your dealer. If you use it as it is, it may cause a fire, an electric shock, etc.

If any abnormality occurs.

It there is abnormal smell or smoke, if you use this unit as it is, this could cause a fire or an electric shock, etc. Immediately turn off the power switch and pull out the power plug. Contact your dealer to repair the unit. Do not repair it yourself, as it is very dangerous.

Do not use this unit as it is after trouble has occurred. Immediately turn off the power switch and pull out the power plug, then contact your dealer to have it repaired.

If water, etc., enters the unit, turn it off, pull out the power plug and contact your dealer to have it repaired.

Be careful with the power cord.

Do not scratch, damage or modify the power cord. Do not bend it forcibly. Also do not put a heavy object on it, do not heat it and do not pull it. If you do, the power cord may be damaged and it may cause fire, electric shock, etc.

If the power cord is damaged (exposed or disconnected wire, etc.), replace it. It may otherwise cause a fire, an electric shock, etc.

Make sure that no dirt adheres to the power plug and insert it until it stops. If

Do not look directly into the lens when the lamp is switched on.

Do not look directly into the lens when the lamp is switched on. Since a powerful lamp is used, it could damage your vision, etc.

Do not put a container, etc, with liquid on this unit.

Do not put a vase, flower pot, cosmetic container, medicine or water on this unit. If liquid spills and enters the unit, it may cause fire, electric shock, etc.

Never leave the projector switched on unsupervised.

Never leave the projector switched on unsupervised or let children play with it as unusual conditions may occur which can cause a fire, an electric shock, etc.

Attention !

Non-observance can lead to injury or damage.

Caution
when carrying the unit.

When the unit is to be moved, be sure to disconnect the power plug and check that all external connection cords are removed before moving it. If not, the cord may be damaged and it may cause a fire, an electric shock, etc.

Do not place this unit
where it gets hot.

Be careful if you place the unit outdoors, in a place exposed to direct sunlight or near a heating device, the casing and parts could be affected.

Cleaning the projector.

Handle the projector as you would do any other device with glass components. Avoid impact or dropping. Before cleaning the device disconnect the mains plug.
The worktop is covered with a scratch-resistant glass plate. If necessary, the glass can be cleaned with a soft cloth and a conventional glass cleaner.
The casing can be cleaned with a soft, slightly moistened cloth and mild detergent. Avoid the ingress of moisture into the inside of the equipment. Never use solvents or abrasive cleaners. Do not leave cleaners inside the projector.

Handle the power cord carefully.

Do not bring the power cord near a heating device. The cord's shield may melt and it may cause a fire, an electric shock, etc.
Do not insert / disconnect the power plug with wet hands. It may cause an electric shock.
Do not pull the power cord when the power plug is to be disconnected. The power cord may be damaged and it may cause a fire, an electric shock, etc. Be sure to seize the power plug.

Do not step on this unit.
Do not put a heavy object on it.

Do not step on this unit or put a heavy object on it. Pay attention when children are present. If you do, the unit may fall over or may be broken causing an injury.

Never block
the ventilation slots.

Never block the openings for the ventilation or place objects in the projector. Heat may accumulate inside the projector and it may catch fire.

Set the caster stoppers.

When this unit is installed on a table with casters, set the caster stoppers. If the table moves, it may fall over, causing an injury.

If you do not use
the unit for a long time.

If you do not use the unit for an extended period of time, be sure to pull out the power plug from the power outlet.

Replacing the lamp.

Switch off the projector and disconnect the mains plug before replacing the lamp. Let the device cool down, as the lamp and other components in the projector casing have heated up during operation, which can cause injury when touched.

Do not place this unit
in a moist or dusty place.

Do not place this unit in a moist or dusty place. It may cause a fire, an electric shock, etc. Do not place this unit where it would be exposed to soot or steam, near a cooking stove or humidifier, etc. It may cause a fire, an electric shock, etc.

Volume.

Use a volume level that does not bother persons in the neighborhood. Especially, since the sound is likely to carry well at nighttime even at a low volume, be careful to choose a suitable level.

Clean the projector inside
at least once a year!

Ask your dealer to clean the unit inside once a year. If the unit is left with too much dust inside it may cause fire.

Use of batteries.

Do not use batteries not specified for this unit. Do not use new batteries mixed with old ones. This may cause a fire, injury due to burst of battery, liquid leakage.

When inserting batteries in this unit, pay attention to the direction of the + and - polarities and insert the batteries correctly. If the polarities are confused, it may cause injury or damage near the unit due to burst batteries, liquid leakage, etc.

2 Scope of delivery, accessories, Disposal of packing material

2.1 Scope of delivery

AC power cable (1.8m / 6.0ft)

VGA cable (1.8 m / 6.0ft)

Video cable (1.8m / 6.0ft)

S-Video cable (1.8m / 6.0ft)

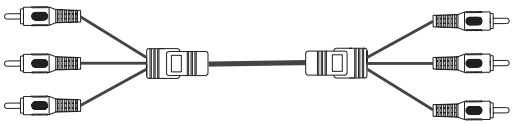

Component YCbCr cable
(1.8m / 6.0ft)

PS/2 mouse cable
(1.8m / 6.0ft)

Audio-Kabel (1.8m)

AAA battery x 2

Remote control and batteries

User Manual

Air Filter

2.2 Accessories

The following accessories are available:
Monitor splitterbox, Boosterbox, booster extension cables, HDTV Cable, Ceiling mount, replacement bulb

In case of extreme operating conditions:

In case of extreme operating conditions – examples: >8-hour-operation, severe vibrations, great temperature fluctuations, heavy nicotine or other aggressive smoke, heights exceeding 3000 m – please contact your dealer. We recommend that you conclude a maintenance contract.

Important note

The projector features its own electronic multi-range power supply with automatic switching. It must only be operated with 100 V - 240 V AC with a frequency of 50 Hz to 60 Hz. The unit must only be connected to a properly installed network with protective conductor. Please check immediately whether the supplied mains cable is compatible with the mains sockets on-site. Please contact your supplier if a different power supply cable is required for use abroad.

2.3 Disposal of packing material

The transport packing consists only of materials which may be disposed.

Remark: the transport packing offers perfect protection for the product and should be kept for further transport etc.

3 Views and parts of the projector

3.1 Top, front, and side view of the unit

(with control buttons, indicators and input sources)

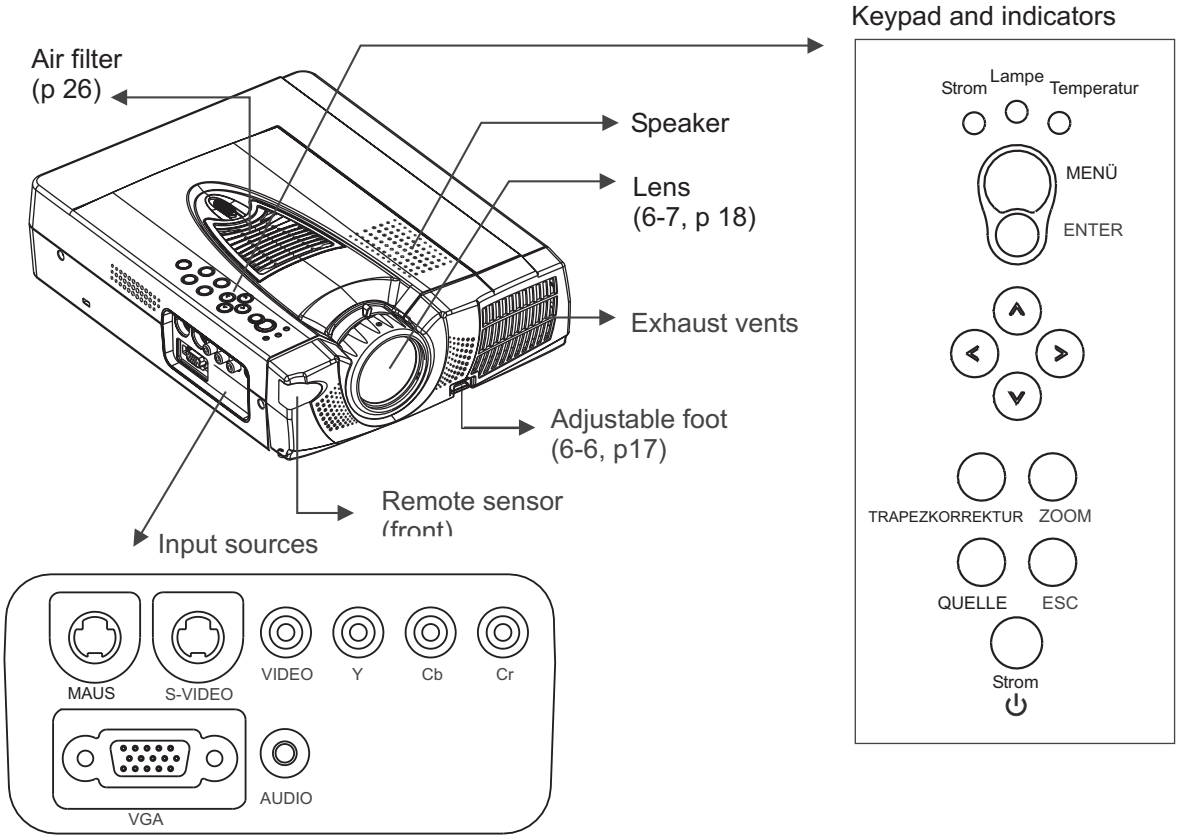

3.2 Rear view

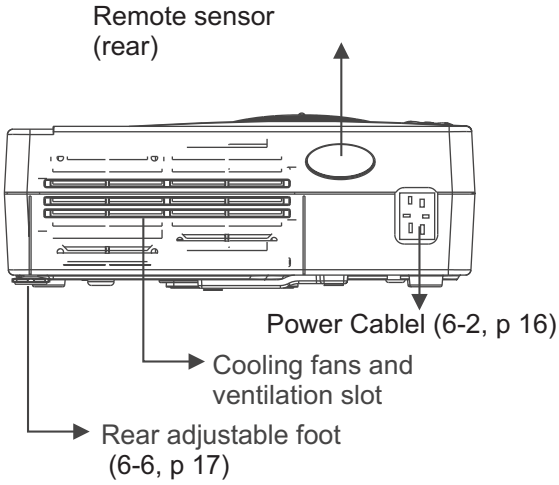

3.3 Bottom view

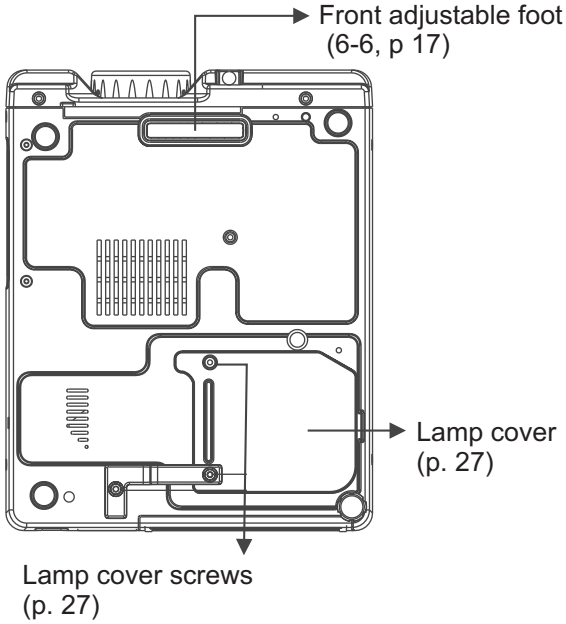

4 Installation

Please read the important safety information (p2) carefully before installation.

4.1 Positioning

Please place the unit on a solid plat level surface.

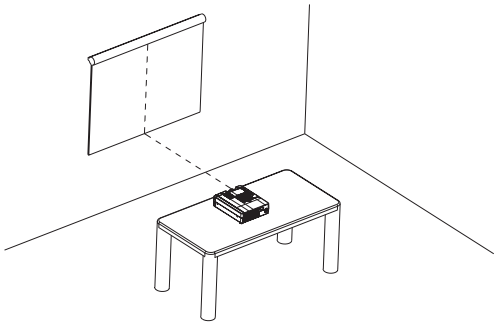

4.2 Projection distance and image size

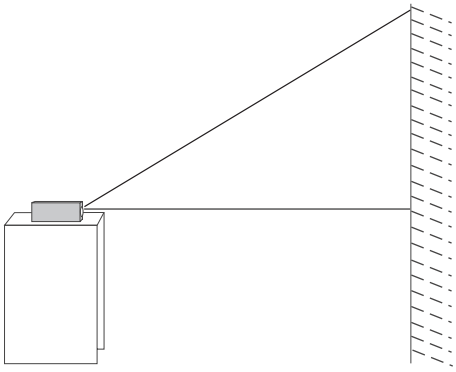

The distance from projector lens to the screen will determine the size of the projected image. The maximum image size is about 290 ~ 378 inches (about 7.3 ~9.6 meter) diagonally at a distance of 15 meter.

4.3 Projection Table

Projektionsabstand (m)	Bildgröße (diagonal)	
	Breit (m)	Tele (m)
1,0	0,7	0,5
2,0	1,3	1,0
3,0	2,0	1,5
4,0	2,6	2,0
5,0	3,2	2,5
6,0	3,8	3,0
7,0	4,5	3,5
8,0	5,1	4,0
9,0	5,8	4,4
10,0	6,4	4,9
11,0	7,0	5,4
12,0	7,7	5,9
13,0	8,3	6,4
14,0	9,0	6,9
15,0	9,6	7,4

* "Wide" and "tele" means the maximum and minimum image size diagonally at the same distance by adjusting lens to zoom.

4.4 Ventilation

- Please do not place any object near the ventilation slots of the projector within 30cm distance.

- Please prevent any scraps or lint suck into ventilation slots or use the projector in the dusty environment.

- Please do not operate the projector while the ambient temperature or the humidity is too high.

- Please use the projector at plate level and use the adjustable feet to adjust the height. Do not operate the projector upside down or at an inclined level. This may damage the projector.

4.5 Ceiling installation

RX 3600+ can be installed on the ceiling for education, conference and home entertainment applications.

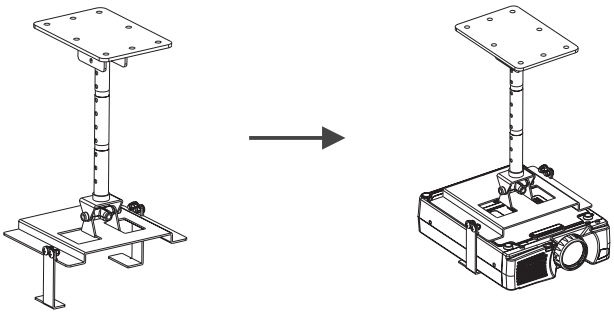

The ceiling mount is an optional accessory. Please contact qualified service personnel or agent for further information or service.

5 Connections

5.1 Connecting a computer or a notebook PC

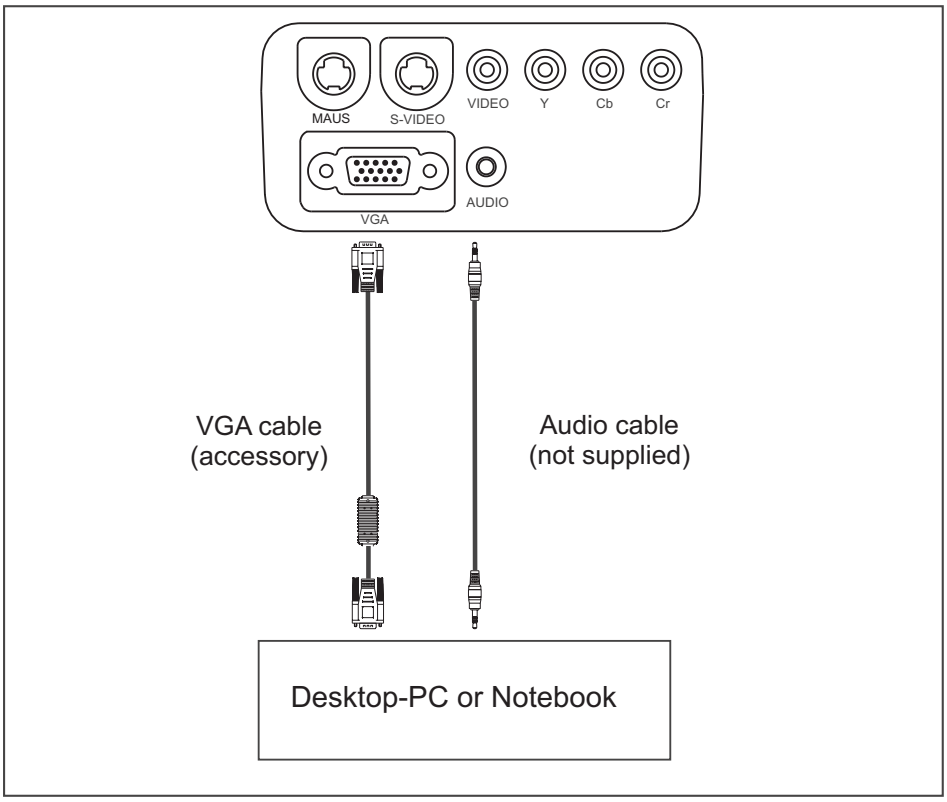

5.2 Using the remote control as the PC mouse

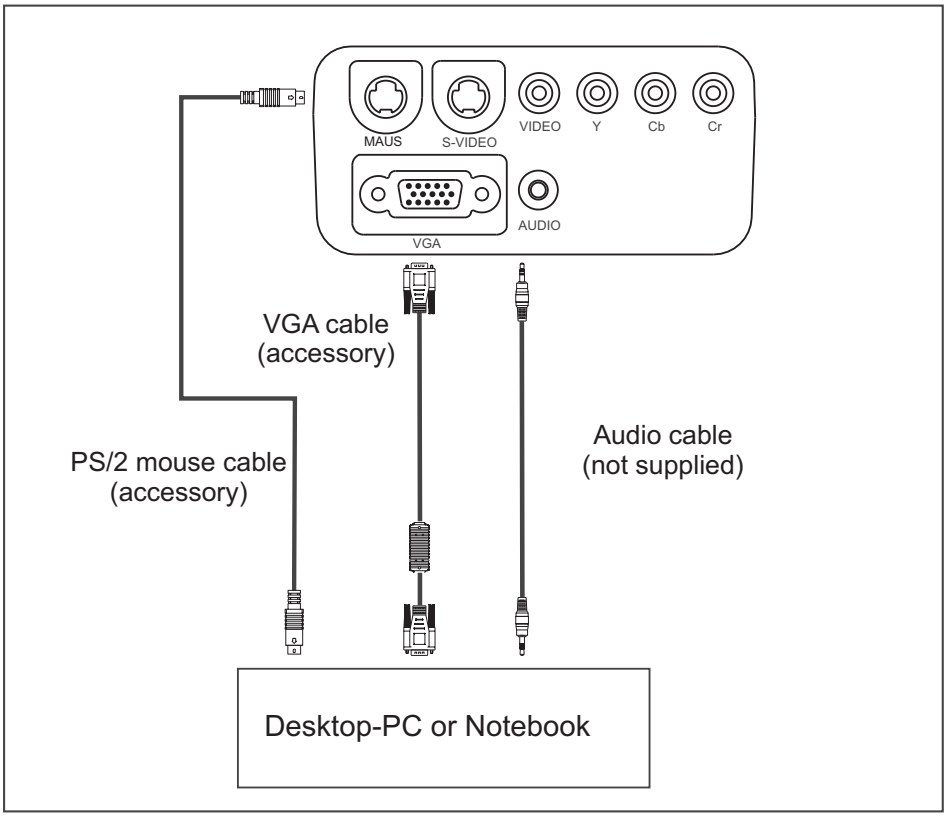

5.3 Connecting video equipments

Composite video images

Connecting a VCR/VCD/DVD player, digital camcorder by using a composite video cable

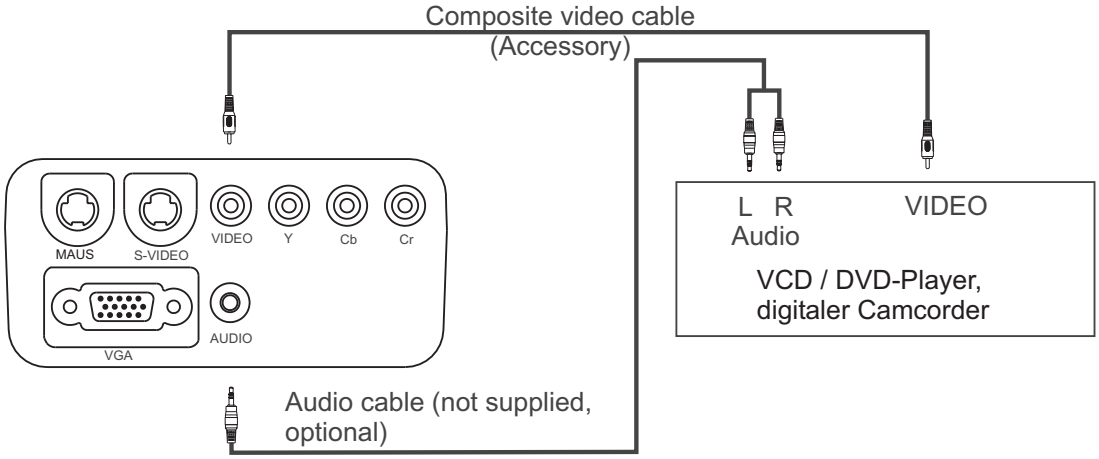

S-Video images

Connecting a VCD/DVD player, digital camcorder by using a S-Video cable

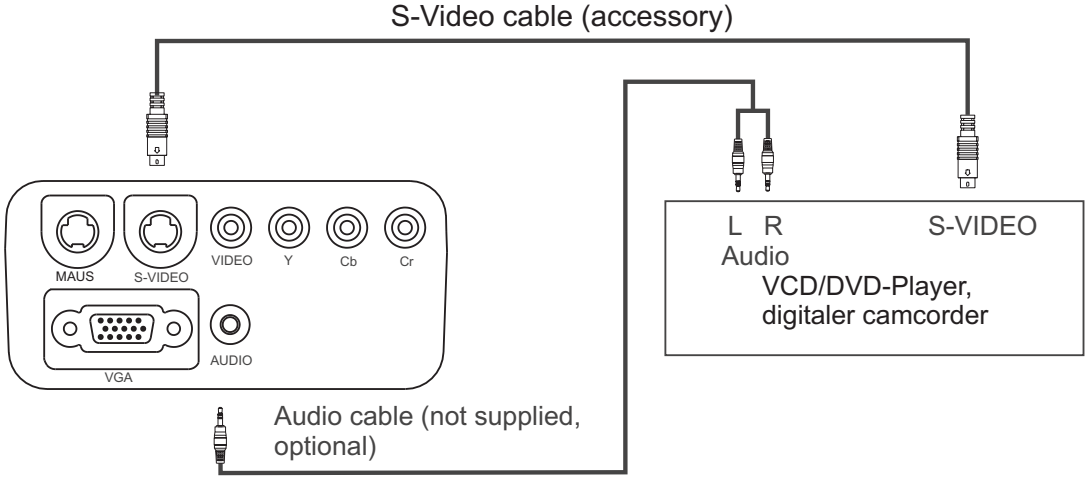

Component images: YcbCr

Connecting a DVD player by using a component video cable (YCbCr)

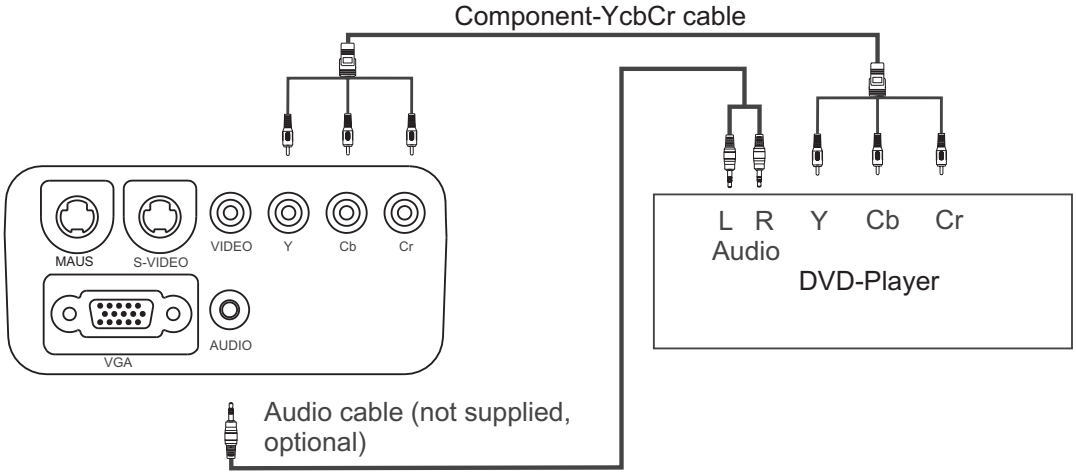

Component images: HDTV

Connecting a DVD player or set-top-box by using a YPbPr to VGA converting cable

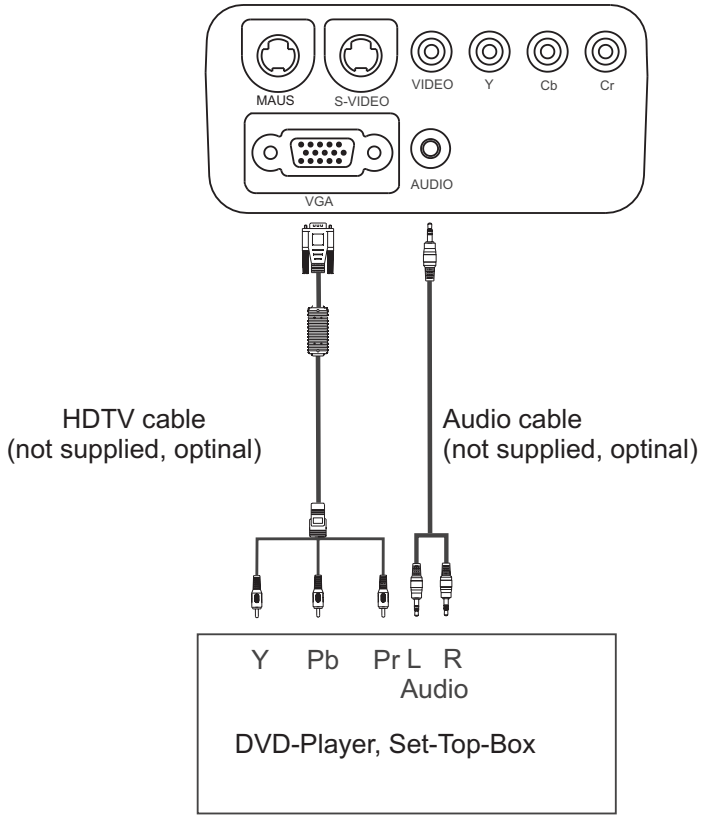

* If your DVD player does not support Macrovision (video copy protection) -encoded function, please use YCbCr video input as your component video source.

6 Starting operation

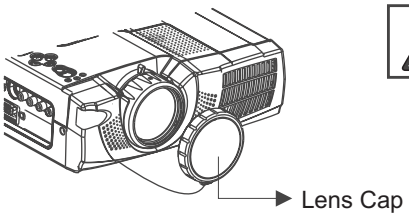

⚠	Remove the lens cap before starting operation.

1. Connect a PC or video equipment to the projector
   (Connection see p 13 - 15)
2. Connect the power cable.
   The three indicators will flash RED and the cooling fan will operate at slow speed.

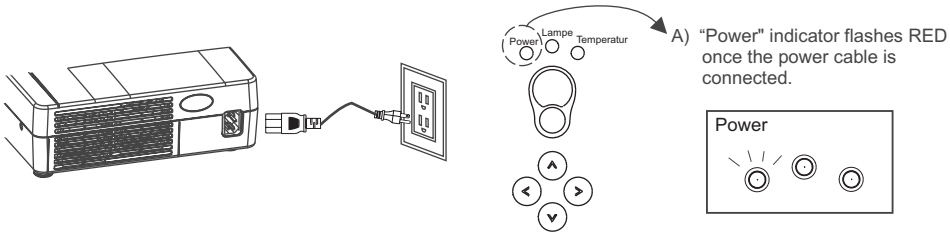

3 Press "POWER" button on the keypad or the remote control to start operating the projector. "Power" indicator turns GREEN and continues flashing for 30 seconds until lamp lights on. If the lamp successfully lights up, the indicator will stop flashing and the projected image appears.

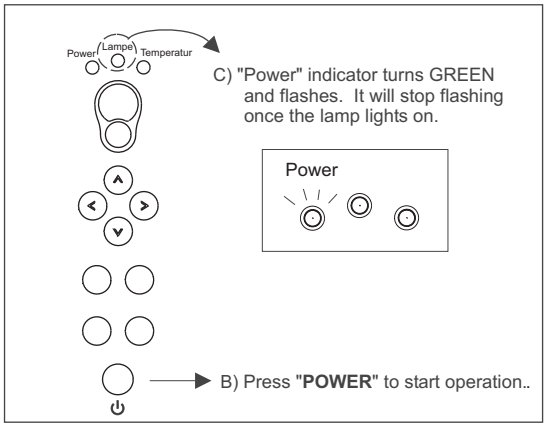

4 Turn on the connected input source (PC, video equipment, etc.)
User can press the "SOURCE" button on the kkeypad or the remote control to select input signal manually.

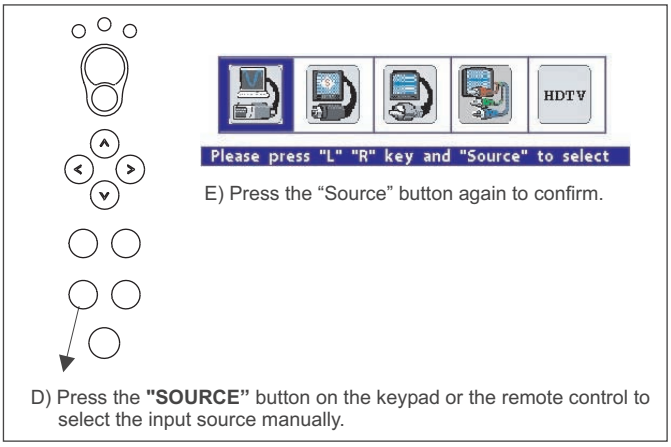

5. Adjust the position of the unit
   Move the unit to the position where the projected image's size is appropriate and horizontally centered to the screen or wall.

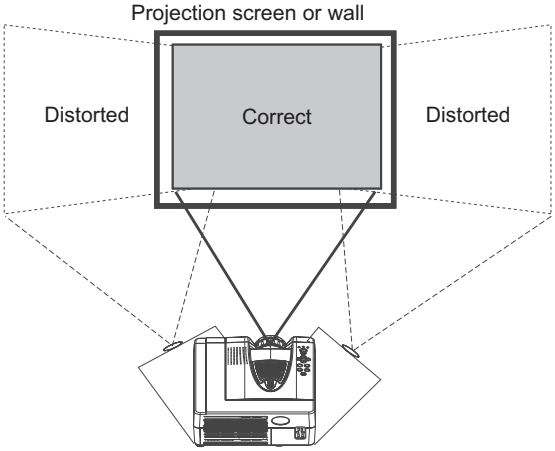

(See 4.2, p11 for projection distance and projected image size.)

6. User can use the adjustable feet to adjust the height of projected image.

6.1 Front adjustable foot

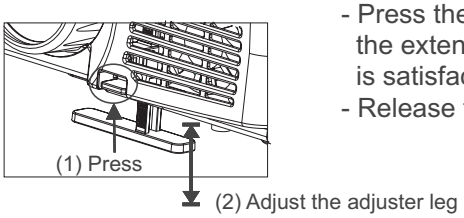

- Press the adjuster button upward to loosen the extendable leg unti the position of image is satisfactory.
- Release the button and the leg will be locked.

6.2 Rear adjustable foot

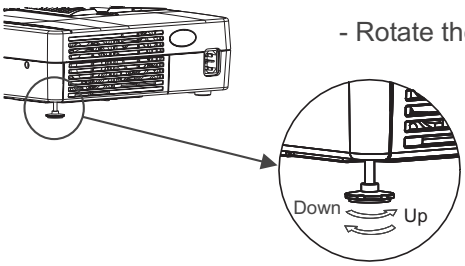

- Rotate the rear adjuster and adjust the level

7. Adjust the position of the projected image

If the projected image is offset, user can press the "**KEYSTONE"** button on the keypad (or the remote control) and use ˄ ˂ ˅ ˃ keys for further adjustment until the image is square.

The adjustable angle of keystone correction of RX 3600+ is +/-15 degree. When pressing ˄ ˅ keys, it will proceed vertical keystone correction and when pressing ˂ ˃ keys, it will proceed horizontally.

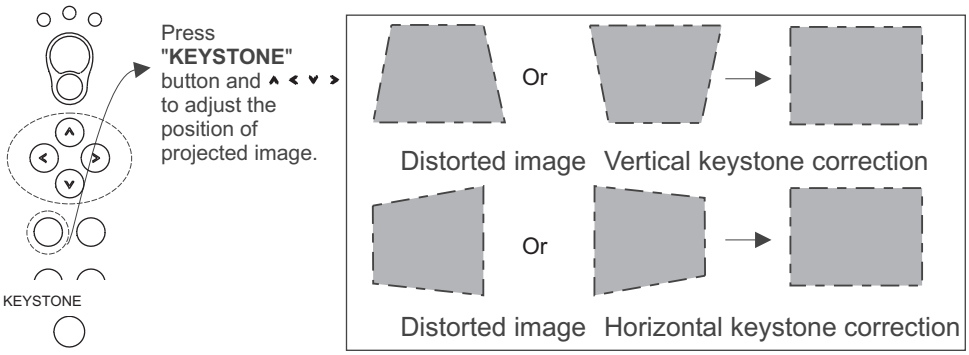

8. Adjust the image size

User can use Zoom adjuster near the lens to adjust the size of image after positioning the unit. Then, use "Focus ring" to adjust the focus for a clear image.

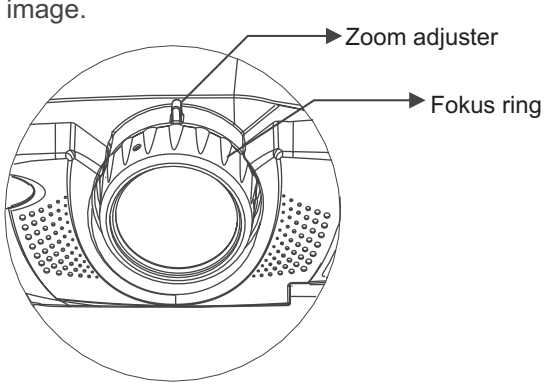

9. Other functions by using the keypad or remote control

User can use the following buttons on the keypad or the remote control while operation if needed.

- **MENU** : On-Screen Display window (OSD) shows up and user can press ˄ or ˅ and **ENTER** to select the element and adjust.
  (see p12~14 for OSD introduction)

- **ZOOM** (digital): user can use < , > on the keypad or +, - on the remote control to zoom the image.

- **ESC**: Cancel OSD window.

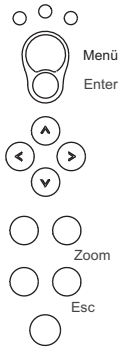

10. After using the unit

Press "POWER" on the keypad or the remote control and a shut-off window shows up. If user confirms to turn off the projector, press "POWER" button again and the lamp will shut off.

The "Power" indicator will light GREEN and continue flashing for 3 minutes.

Shut-off window shows up. Press "POWER" again to confirm.	"Power" indicator lights GREEN and turns to RED after 3 minutes.
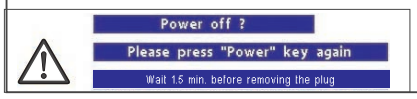	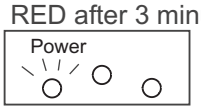

⚠ Please do not disconnect the power cable before "Power" indicator lights RED.

After the lamp turns off, the cooling fan will continue running for 1.5 minutes to cool down the lamp in order to keep it in good condition.
When the "Power" indicator turns RED, user can disconnect the power cable.

⚠ RX 3600+ is designed not able to restart when the projector just shuts off and the cooling procedure is still going on. User must wait until the cooling procedure completely finishes before restarting the unit.

7 Using the remote control

7.1 Buttons on the the remote control

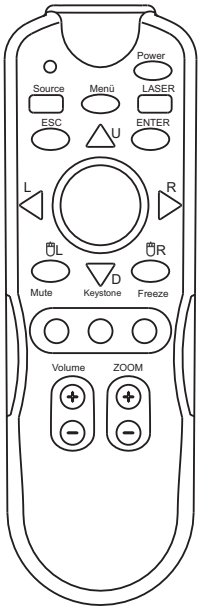

7.2 Inserting batteries before operating

RX 3600+ attaches two AAA batteries as accessories. If the electricity is used up, please purchase and replace new ones of the same type.

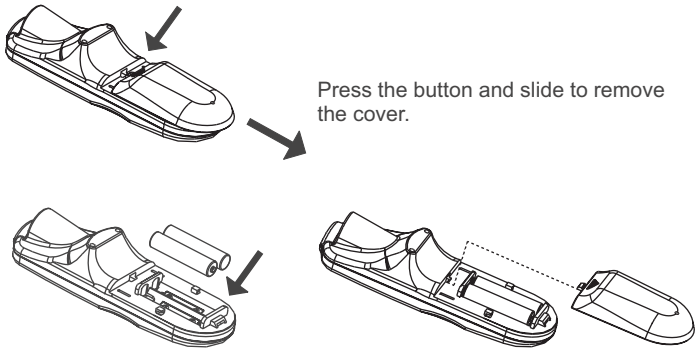

1. If the remote control gets wet, please wipe it dry immediately.
2. If you will not use the remote control for a long time, remove the batteries.
3. Do not mix new and old or different types of batteries.

7.3 Using "General Function Keys" on the remote control

Those functions are the same on the keypad.

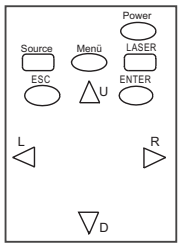

- **POWER**: turning on the unit and starting operation.
- **SOURCE:** selecting the input source manually such as VGA (connecting computer), Video, S-Video, YCbCr, or HDTV (YPbPr).
- **MENU** : On-Screen Display menu (OSD) and adjust the picture elements. Using "**ENTER**" button to enter OSD components or using "**ESC**" to cancel OSD.
- **LASER**: pressing the button to use the remote control as a laser pointer.

Do not point LASER pointer to anyone's eyes or stare into beam.

Laser Beam:
Laser type: Class 2, Wavelength: 650nm,
Output: 0.45-0.80 mWW

7.4 Using the "Mouse Keys" as wireless PC mouse

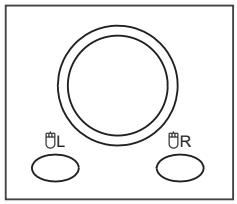

User can use the remote control of Mayfair / Mayfair pro as a wireless PC mouse while connecting the projector to a computer.

- **L**: the same as "Left button" of PC mouse.
- **R**: the same as "Right button" of PC mouse.
- ▲ ▼ ◀ ▶ : moving the mouse "up", "down", "left" and "right"

7.5 Using the "Hot Keys"

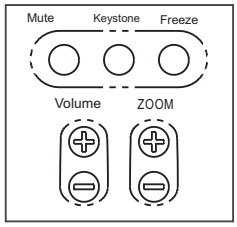

- **MUTE:** no audio effect. Press the same button to relieve the function.
- **KEYSTONE:** using ▲▼◀ ▶ for further adjustment until the image is square.
- **FREEZE:** freezing the picture. Press the same button to relieve the function.
- **VOLUME:** using +, - to adjust volume.
- **ZOOM:** using +, - to zoom the projected image.

8 Menu Operation

MENU is designed for user to adjust the image components or select other function operation.

User can press the "MENU" button on the keypad or on the remote control to enter the adjustable elements.

8.1 VGA and HDTV (YPbPr) Input Menu

When the projector is connected to a computer, a DVD player with progressive scan function, or a set-top-box for HDTV applications, user can press the "SOURCE" key on the keypad or the remote control to select VGA or HDTV input source manually.

While receiving VGA/HDTV (YPbPr) input source, he MENU functions are displayed as follows:

A) **Auto**

This function can be executed only in VGA mode while connecting to computer. User can press "ENTER" key to enter this component and press "ENTER" key again to execute this function. "Auto Image Adjustment" helps user to get a better image quality by fine tuning the input signal automatically.

B) **Farbe**

There are 4 elements in the "Color" component.
- **Brightness:** adjusting the brightness of image.
- **Contrast:** adjusting the contrast of image.
- Color Temperature: adjusting the color balance.
- **Mode:** selecting the different gamma mode for different application. "Presentation" mode is appropriate for data presentation; "Norm" mode is the factory default setting for normal use and "Home theater" mode is appropriate for video or home entertainment applications.

C) **Timing**

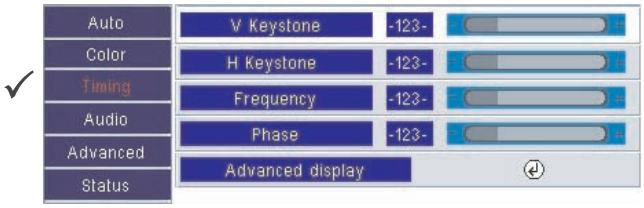

There are 5 elements in the **"Timing"** component.
- **V Keystone:** allowing +/- 15 degree adjustment of vertical keystone correction.
- **H Keystone:** allowing +/- 15 degree adjustment of horizontal keystone correction.
- **Frequency:** adjusting clock frequency if any vertical banding noise.
- **Phase:** adjusting clock phase if any horizontal banding noise.
- **Advanced Display:** pressing "ENTER" key to the sub-menu shown as below:

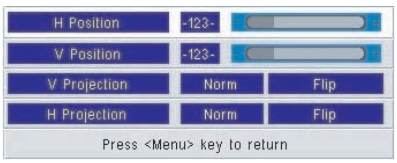

There are 4 elements in this component.
H Position: moving the image horizontally.
V Position: moving the image vertically.
H Projection:
Normal: normal front projection mode
Flip: turning the image over for rear projection.
V Projection:
Normal: normal front projection mode
Flip: turning the image upside down for ceiling projection.
User can press "MENU" key to go back to the main screen of OSD.

D) **Audio**

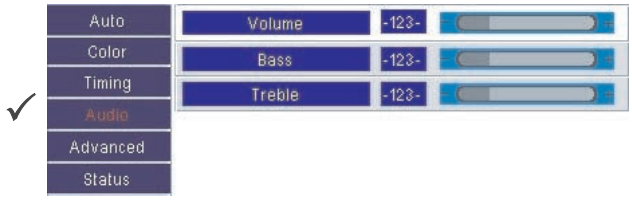

There are 3 elements in the **"Audio"** component.
Volume: adjusting the volume.
Bass: adjusting the bass.
Treble: adjusting the treble.

E) **Advanced**

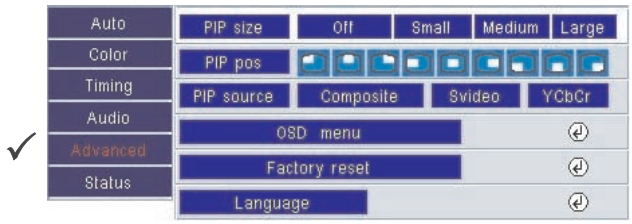

There are 6 elements in **"Advanced"** component.
PIP size: selecting the size of the sub-screen.
PIP pos.: selecting the position of the subscreen.
PIP source: selecting the input source of the sub-screen.
OSD menu: pressing "ENTER" key to the sub-menu for setting up the functions of OSD. User can set up the "timeout", "background", and "position" of OSD at his/her own need.

Language: pressing "ENTER" key and user can set up the OSD language on the sub-screen shown as below:

8.2 **Factory reset:** selecting and pressing "ENTER" key to cancel all adjusted elements and reset to factory standard settings.

F) **Status**

There are 2 elements in the **"Status"** component.
Lamp hour meter: the time of lamp used.
S/W version: the version of the software.

8.3 Video Input Menu

When the projector is connected to a video equipment, user can press the "SOURCE" on the keypad or the remote control to select video input source such as Video, S-Video or YCbCr.

While receiving Video input source, the MENU functions are displayed as follows:

A) **Color**

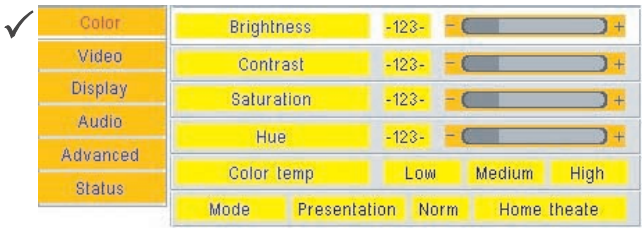

There are 6 elements in the **"Color"** component.
Brightness: adjusting the brightness of image.
Contrast: adjusting the contrast of image.
Saturation: adjusting the richness of color.
Hue: adjusting the hues of color. (For YCbCr connection, this adjustment is not available.)
Color Temperature: adjusting the color balance.
Mode: selecting the different gamma mode for different application. "Presentation" mode is appropriate for data presentation; "Norm" mode is the factory default setting for normal use and "Home theater" mode is appropriate for video or home entertainment applications.

B) **Video**

There are 2 elements in the **"Video**" component.
Video Format: selecting color system which varies from different areas.
Scale Mode: selecting different aspect ratio.

norm: common 4:3 aspect ratio
wide: wide 16:9 aspect ratio
6:9 to 4:3: cut native 16:9 aspect ratio image to 4:3. .

C) **Display**

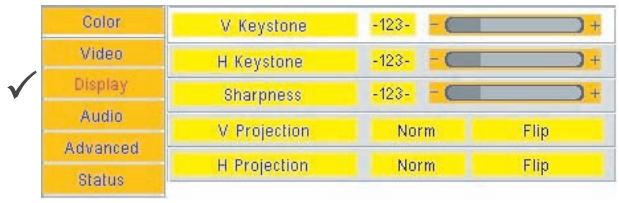

There are 5 elements in the **"Display"** component.
V Keystone: allowing +/- 15 degree adjustment of vertical keystone correction.
H Keystone: allowing +/- 15 degree adjustment of horizontal keystone correction.
Sharpness: adjusting the outlines of objects to be soft or hard.
H Projection:
Normal: normal front projection mode
Flip: turning the image over for rear projection.
V Projection:
Normal: normal front projection mode
Flip: turning the image upside down for ceiling projection.

D) **Audio**

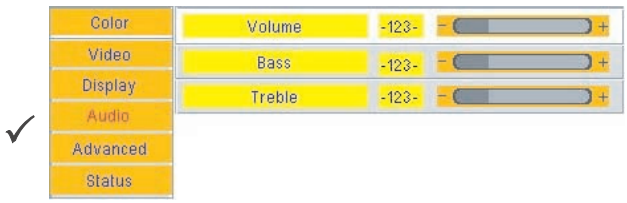

There are 3 elements in the **"Audio"** component.
Volume: adjusting the volume.
Bass: adjusting the bass.
Treble: adjusting the treble.

E) **Advanced**

There are 5 elements in **"Advanced"** component.
OSD timeout: setting the staying time of OSD.
OSD background: selecting the background of OSD to be opaque or translucent.
OSD position: selecting the position of OSD.
Factory reset: selecting and pressing "ENTER" key to cancel all adjusted elements and reset to factory standard settings.
Language: pressing "ENTER" key and user can set up the OSD language on the sub-screen shown as below:

F) **Status**

There are 2 elements in the **"Status"** component.
Lamp hour meter: the time of lamp used.
S/W version: the version of the software.

9 Indicators lighting or flashing

There are three indicators on the cover of the projector. Indicator lighting or flashing delivers different messages.

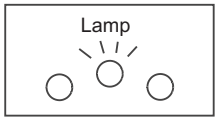

9.1 Starting operation

Please see 6.2 and 6.3 on page 16.

9.2 Shutting off the projector

Please see 6.9 on page 18.

9.3 Abnormal status

A) When the air filter or the cabinet of projector is open or loosen, the "lamp" indicator will light RED.

=> Close the cabinet and screw it tight. If user has any problem to fix it, please contact qualified service personnel for service.

> ⚠ DO NOT OPEN THE CABINET!

B) When the lamp operates abnormally, the “ lamp" indicator will light RED and flash.

=> User can shut off the projector and restart later. If the status remains, please contact qualified service personnel for service.

10 Cleaning and replacing the air filter

The air filter must be cleaned once about every 300 hours. If dust accumulates too much and becomes difficult to remove by using vacuum cleaner, please replace the air filter to keep the ventilation of LCD panel module in good condition.

Note: Periodically check air filter for excess dust or dirt. Replace or clean as needed.

Every Mayfair / Mayfair pro attaches one spare air filter for replacement. If more is required, please contact the agent for purchasing or consultation. User can clean or replace the air filter by following the procedure below.

> ⚠ THE POWER CABLE MUST BE DISCONNECTED to prevent the danger of electric shock while user replacing the air filter.

A) Power off the projector and disconnect the power cable.

B) Press the button shown as below and push horizontally to release the filter door.

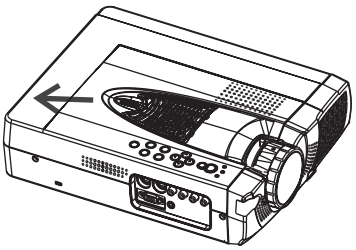

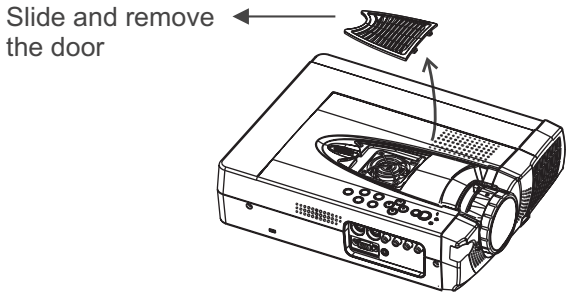

C) Turn over the filter door and use a vacuum cleaner to remove the dust or replace the air filter dire

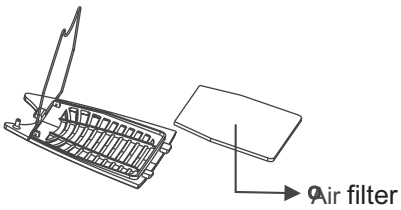

11 Replacing the lamp cartridge

Under normal usage, the lamp life time of the projector is about 2000 hours. The output luminance will drop as lamp life diminishes. User can check the used lamp life status in the MENU (see p 23).
Important Note: In case of extreme operating conditions - examples: >8-hour-operation, severe vibrations, great temperature fluctuations, heavy nicotine or other aggressive smoke, heights exceeding 3000m - please contact your dealer. We recommend that you conclude a maintenance contract.
Important Note: This lamo contains mercury. Consult your local hazardous waste regulations and dispose of this lamp in a proper manner.
Caution: Always switch off the unit and unplug the projector when changing the lamp. There are high voltage parts inside the projector that may cause electric shock.
Caution: Allow the projector to cool down for 30 minutes. Lamp and adjacent metal parts become extremely hot and can cause burns to your fingers.
Caution: Don´t realease any screws except those in the instruction below. This is to prevent user from the danger of electric shock.
Caution: Replacing only the same or equivalent type recommended by the manufacturer or agent.

1. Turn the unit upside down carefully and loose screws on the lamp cover 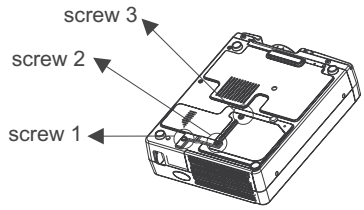	2. Remove the lamp cover. 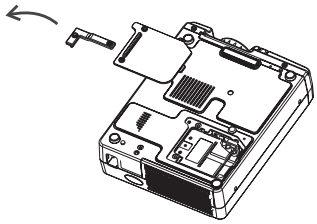
3. Loose the two screws 4 and 5 on the lamp cartridge 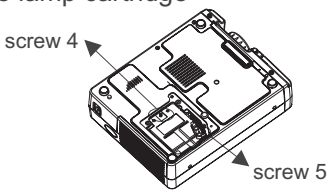	4. Hold the pull bar and pull the lamp cartridge carefully upward to remove it 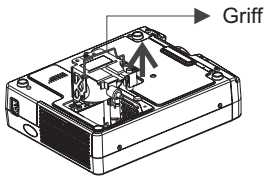
5. Install the new lamp cartridge. 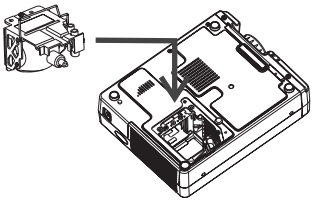	6. Secure the new lamp cartridge with screw 4 and 5 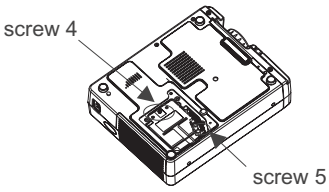

The projector is designed to detect lamp replacement automatically and will then reset the lamp life in the "status" of MENU (see page 23).

12 Specifications of LCD Projector

Optical

Native resolution	: SVGA (800 x 600 pixels)
Resolution supported	: VGA - XGA
Brightness	1300 ANSI Lumens
Technology	: 3-panel 0.9" transmissive LCD
Contrast ratio	: 800 : 1
Brightness uniformity	: >90%
Lamp life	: 2000 hours, typical
Lamp watt	: 150W
Lens type	: Manual focus; manual zoom
F	: 1.7 ~ 2.0
Image size	: 25" to 300"
Projection distance	: 1.5m~15m

Electrical

Input sources	: VGA analog; Video; HDTV (1080i, 720p)
Input terminals	: RGB/HDTV: HD D-sub 15-pinx1 Audio (RGB/Video): Mono mini-jack x 1 YCbCr: RCA x 3 Composite: RCA x 1 S-Video: mini DIN 4-pin x 1
Color system	: Full NTSC, PAL, SECAM
Aspect ratio	: 4 : 3, 16:9
Remote control	: IR w/mouse and laser pointer
Audio	: 1W built-in speaker
Noise	: 37dB
Power consumption	: Normal: 225W Standby: <5W
Power requirements	: 100 - 240VAC, 2.2 A, 50 - 60Hz
Keystone correction	: Vertical +/-40° and Horizontal +/- 12°
Laser radiation	: Class 2, 650nm wavelength 0.45~0.80mW
Other features	: Digital zoom, freeze capability, PIP (picture in picture)

Mechanical

Installation	: Front/rear/ceiling/desktop
Weight	: 3.7kg (8.1 lbs)
Dimensions	: 25.0 x 31.0 x 7.8 cm (9.8 x 12.2 x 3.07 inch)

Kennzeichen

Safety and EMC	: UL, CUL, CE, FCC Class A

13. FCC Compliance Statement For United States Users

This Equipment has been tested and found to comply with the limits far a class A digital device, pursuant to part 15 of the FCC Rules. These limits are designed to provide reasonable protection against harmful interference when the equipment is operated in a commercial envirinment. This equipment generates, uses, and can radiate radio frequency anergy and, if not installed and used in accordance with the instructin manual, amy cause harmful interference to radio communications. Operation of this equipment in a residental area is likely to cause harmful interference in which case the user will be required to correct the interference at his own expense.

Warning:

A shielded-type power cord is required in order to meet FCC emission limits and also to prevent interference to the nearby radio and television reception. It is essential that only the supplied power cord be used.
Use only shielded signal cables to connect I/O devices to this equipment.

14. Service Hotline

For information about Liesegang products and if you have problems with operation of Liesegang products please do not hesitate to call Liesegang at +49 1805 390145.
In case of technical problems please feel free to call Liesegang at +49 1805 390144 or +49 01805 390146.
Fax Hotline +49 211 39 01 226

15. Product Manufacturer

Liesegang
Volmerswerther Str. 21
D-40221 Düsseldorf
Phone +49 211 3901-1
Fax +49 211 3901-227

Trademarks used in this manual: PS/2, USB, IBM, Kensington Lock and Microsoft are registered trademarks of these manufacturers.
All details are correct at time of going to press, 3/21/2002. We reserve the right to make technical changes due to further development, any delivery changes and accept no liability for errors contained. The published data is only intended for purposes of product description and are not to be understood as assured and legally binding characteristics.

Glossary of Terms

Hz, KHz, MHz (Hertz, Kilohertz, Megahertz)

Hertz is a unit of measurement used to express the frequency, in cycles per second, of an electrical signal or event. (Megahertz = 1 million cycles per second)

Lumens

A measure of light output on a screen or other surface. One lumen is the light of one candle power on each square foot of a surface of a sphere at a radius of one foot from the light soruce.

Metal halide lamp

A modified mercury arc lamp that is extremely bright. It is filled with a gas with elements known as halogens. The properties of this fill gas allows the lamp to burn longer and brighter than ordinary lamps.

NTSC (National Television Systems Committee)

Standard for television signals and other video equipment signals. The standard uses interlaced scans and 525 horizontal lines per frame, at a rate of 30 frames per second.

PAL (Phase Alternate Line)
The format for colour television signals used in Germany, England and many other countries. PAL is an interlaced format with 25 frames per second and 625 lines per screen.

Pixel (word coined from Picture Element)

This is one image dot, a definite position on a display that consists of a single dot or a group of three dots (red, green, blue).

Resolution

The number of pixels available in a display device for creating images. Expressed as a number of columns by number of rows (e.g. SVGA resolution, 800 x600).

S-VHS (S-Video, Super VHS)

A video signal which separates the luminance (Y) and chrominance (C) signals. Also known as Y/C video.

SECAM (Séquentiel Couleur a Mémoire)

A colour television standard developed in France and also used in certain other countries.

XGA

Warranty terms
for the Liesegang RX 3600+

What to do in case of a defect?

1. **Take the** product to your dealer or carefully pack it and send it to us unfranked (address below). Please make sure that you enclose a copy of your receipt and briefly describe the defect. Don't forget to add your telephone number, fax number, and email address.

2. **If our check reveals** a genuine fault (i.e. not a case of improper handling or wear and tear), we will remove the defect. If you have requested the delivery of a faultless product, we will meet this claim, unless the cost for removal of the defect are less than 75% of the purchase price paid by you and the removal of the defect has no substantial disadvantages for you.

3. Wearing parts like e.g. lamps and LCD are not subject to the warrenty.

4. **If our check reveals** that there is no entitlement on your part to a removal of the defect, we will advise you accordingly together with a quotation for a repair. Should you fail to place an order for the repair of the product within one month, we will return it to you free of charge.

5. **Should the fault** reoccur after it has been removed, we will deliver to you a faultless product, unless you insist once again on the removal of the defect. If the second rectification of the defect also fails, you will be entitled to withdraw from the contract of sale.

6. **The above arrangements** will not affect your statutory claims against your dealer. The above obligations shall be assumed by us in addition to the obligations of your dealer. Where your claim is met directly by us, this shall at the same time be deemed to be the performance of the liabilities of your dealer towards you.

The above obligation is assumed by:
Liesegang
Volmerswerther Str. 21
D- 40221 Düsseldorf

Düsseldorf, 11. 12. 2002