myprojectorlamps.com

**The most trusted, dependable name in projector lamp sales.**

http://www.myprojectorlamps.com

http://www.myprojectorlamps.ca

http://www.myprojectorlamps.eu

The following projector manual has not been modified or altered in any way.

Liesegang
projection technology

# ddv 2000
(type 1201)

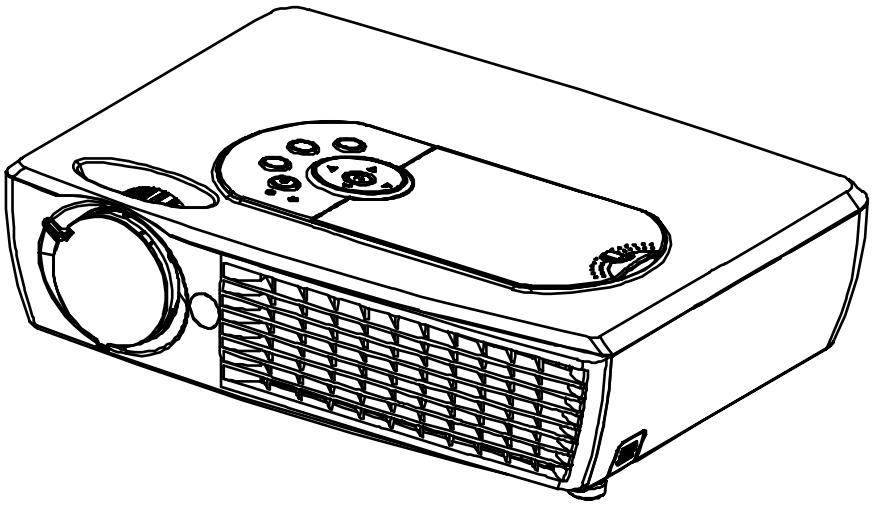

# User Manual

## Copyright

This publication, including all photographs, illustrations and software, is protected under international copyright laws, with all rights reserved. Neither this manual, nor any of the material contained herein, may be reproduced without written consent of the author.

© Copyright September, 2004

## Disclaimer

The information in this document is subject to change without notice. The manufacturer makes no representations or warranties with respect to the contents hereof and specifically disclaims any implied warranties of merchantability or fitness for any particular purpose. The manufacturer reserves the right to revise this publication and to make changes from time to time in the content hereof without obligation of the manufacturer to notify any person of such revision or changes.

## Trademark Recognition

All product names used in this manual are the properties of their respective owners and are acknowledged.

## Important Safety Information

Congratulations on purchasing the DLP projector!

**Important:**
It is strongly recommended that you read this section carefully before using the projector. These safety and usage instructions will ensure that you enjoy many years safe use of the projector. Keep this manual for future reference.

### *Symbols Used*

Warning symbols are used on the unit and in this manual to alert you of hazardous situations.

The following boxes are used in this manual to alert you to important information.

***Note:***
*Provides additional information on the topic at hand.*

***Important:***
*Provides additional information that should not be overlooked.*

***Caution:***
*Alerts you to situations that may damage the unit.*

***Warning:***
*Alerts you to situations that may damage the unit, create a hazardous environment, or cause personal injury.*

Throughout this manual, component parts and items in the OSD menus are denoted in bold font as in this example:
"Push the **Menu** button on the remote control to open the **Main** menu."

### *Main Features*

- *Lightweight unit, easy to pack away and transport*
- *Compatible with all major video standards including NTSC, PAL, and SECAM*
- *A high brightness rating allows for presentations in daylight or in lit rooms*
- *Supports resolutions up to XGA at 16.7 million colors to deliver crisp, clear images*
- *Flexible setup allows for front rear and ceiling projection*
- *Line-of-vision projections remain square, with advanced keystone correction for angled projections*
- *Input source automatically detected*

### *Remote Control*

The remote control has a laser pointer for pointing out items on a screen.
**DANGER: Never look directly into the laser beam outlet or point the laser beam at other people. The laser can cause vision problems.**

### *General Safety Information*

- Do not open the unit case. Aside from the projection lamp, there are no user-serviceable parts in the unit. For servicing, contact qualified service personnel.
- Follow all warnings and cautions in this manual and on the unit case.
- The projection lamp is extremely bright . To avoid damage to eyes, do not look into the lens when the lamp is on.
- Do not place the unit on an unstable surface, cart, or stand.
- Avoid using the system near water, in direct sunlight, or near a heating device.
- Do not place heavy objects such as books or bags on the unit.

### *Power Safety*

- Only use the supplied power cord.
- Do not place anything on the power cord. Place the power cord where it will not be in the way of foot traffic.
- Remove the batteries from the remote control when storing or not in use for a prolonged period.

### *Replacing the Lamp*

- Replacing the lamp can be hazardous if done incorrectly. Refer to “Replacing the Projection Lamp” on page 26 for clear and safe instructions for this procedure.
- Unplug the power cord.
- Allow the lamp sufficient time to cool.

### *Cleaning the Projector*

- Refer to “Cleaning the Projector” on page 31.
- Unplug the power cord before cleaning.
- Allow the lamp sufficient time to cool.

### *Regulatory Warnings*

- Before installing and using the projector, read the regulatory notices in the “Regulatory Compliance” section on page 39.

## About this manual

This manual is intended for end users and describes how to install and operate the DLP projector. Wherever possible, relevant information—such as an illustration and its description—has been kept on one page. This printer-friendly format is both for your convenience and to help save paper and thereby protect the environment. It is suggested that you only print sections that are relevant to your needs.

# Table of contents

**GETTING STARTED** ..... **1**
PACKING CHECKLIST ..... 1
VIEWS OF PROJECTOR PARTS ..... 2
*Front-left view* ..... *2*
*Top view—OSD buttons and LEDs* ..... *3*
*Rear view—connectors* ..... *5*
*Bottom view* ..... *7*
REMOTE CONTROL PARTS ..... 8
REMOTE CONTROL OPERATING RANGE ..... 9
PROJECTOR AND REMOTE CONTROL BUTTONS ..... 10
**SETUP AND OPERATION** ..... **11**
INSERTING THE REMOTE CONTROL BATTERIES ..... 11
CONNECTING INPUT DEVICES ..... 12
STARTING AND SHUTTING DOWN THE PROJECTOR ..... 13
ADJUSTING THE PROJECTOR LEVEL ..... 14
ADJUST THE ZOOM, FOCUS AND KEYSTONE ..... 15
ADJUSTING THE VOLUME ..... 16
**ON-SCREEN DISPLAY MENU SETTINGS** ..... **17**
ON-SCREEN DISPLAY MENU CONTROLS ..... 17
*Navigating the OSD* ..... *17*
*Setting the OSD Language* ..... *18*
*Main Menu* ..... *19*
*Setup Menu* ..... *21*
*Config Menu* ..... *22*
*Utility Menu* ..... *23*
*Language Menu* ..... *24*
*Status Menu* ..... *25*
**MAINTENANCE AND SECURITY** ..... **26**
REPLACING THE PROJECTION LAMP ..... 26
*Resetting the Lamp* ..... *27*
CLEANING THE PROJECTOR ..... 28
*Cleaning the Lens* ..... *28*
*Cleaning the Case* ..... *29*
USING THE KENSINGTON LOCK ..... 29
**TROUBLESHOOTING** ..... **30**
COMMON PROBLEMS AND SOLUTIONS ..... 30
TIPS FOR TROUBLESHOOTING ..... 30
LED ERROR MESSAGES ..... 31
IMAGE PROBLEMS ..... 31
LAMP PROBLEMS ..... 32
REMOTE CONTROL PROBLEMS ..... 32
AUDIO PROBLEMS ..... 32
HAVING THE PROJECTOR SERVICED ..... 33
**SPECIFICATIONS** ..... **34**
SPECIFICATIONS ..... 34
*Input/output connectors* ..... *35*
PROJECTION DISTANCE VERSUS PROJECTION SIZE ..... 36
TIMING MODE TABLE ..... 37
DIMENSIONS ..... 38
**REGULATORY COMPLIANCE** ..... **39**
FCC WARNING ..... 39
CANADA ..... 39
SAFETY CERTIFICATIONS ..... 39
EN 55022 WARNING ..... 39

## Packing Checklist

Carefully unpack the projector and check that the following items are included:

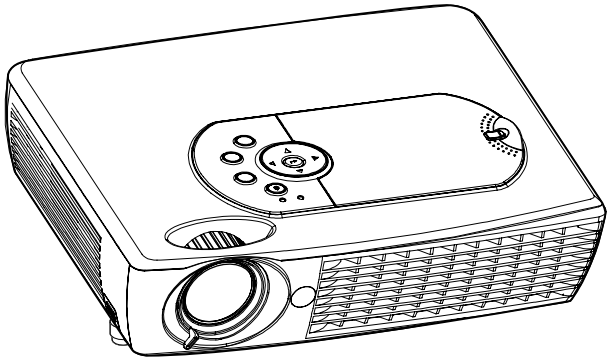

*DLP PROJECTOR WITH LENS CAP*

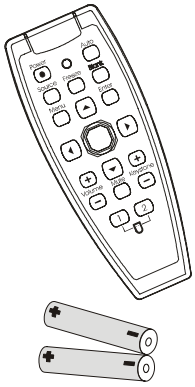

*REMOTE CONTROL (WITH TWO AAA BATTERIES)*

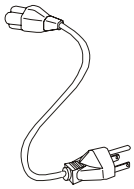

*~~250V~~ POWER CORD*

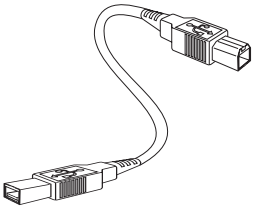

*USB CABLE*

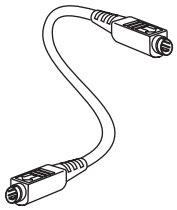

*S-VIDEO CABLE*

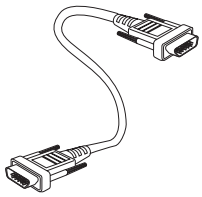

*COMPUTER CABLE (DVI-VGA)*

*CD-ROM (THIS USER'S MANUAL)*

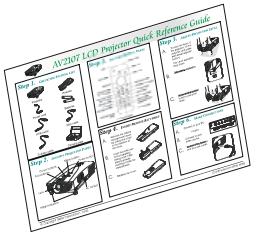

*MULTI-LANGUAGE QUICK START GUIDE*

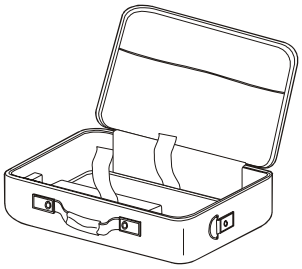

*SOFT CASE*

Contact your dealer immediately if any items are missing, appear damaged, or if the unit does not work.

**Caution:**

1. *Avoid using the projector in dusty environments.*
2. *Leave the power cord plugged in (for 5-10 minutes) until the projector returns to room temperature before placing the projector inside the soft case. Placing the projector into the soft case soon after switching off the power could cause the projector to break down. Be sure to attach the lens cap and place the projector into the soft case with the lens facing upward.*

## Name of Projector Parts

*Front-left view*

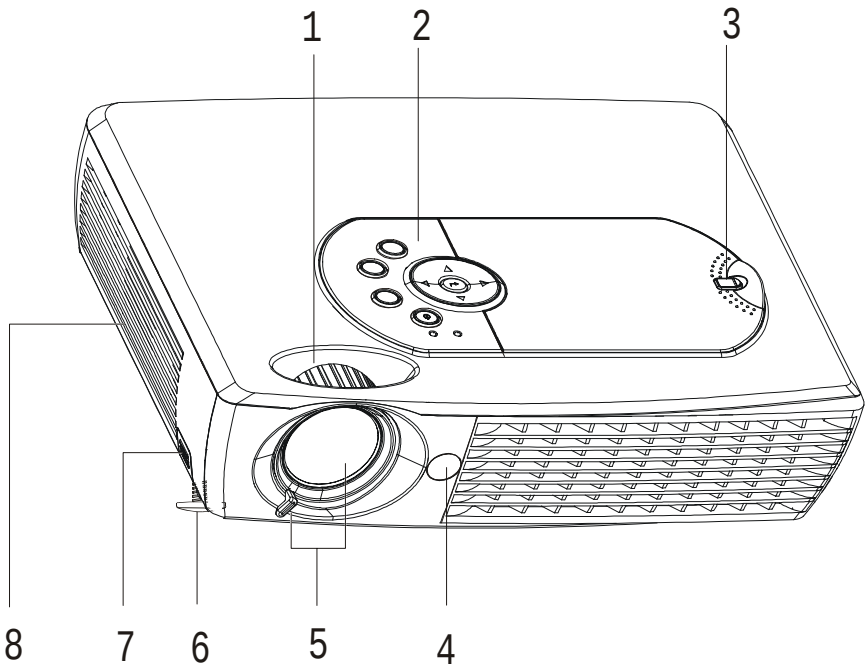


| ITEM | LABEL | DESCRIPTION | SEE PAGE: |
|---|---|---|---|
| **1.** | Zoom | Enlarges and scales down the projected image | ***15*** |
| **2.** | *See OSD buttons and LEDs below* | | ***3*** |
| **3.** | Lamp cover | Remove when changing lamp | ***26*** |
| **4.** | IR receiver | Receiver for IR signal from remote control | ***9*** |
| **5.** | Lens/focus | Remove cover, turn the lens to focus | ***15*** |
| **6.** | Height adjuster | Adjusters drop down when adjuster button is pushed | ***14*** |
| **7.** | Height adjuster button | Push to release height adjuster | |
| **8.** | Speaker | Built-in mono speaker | |

***Important:***
*Grill openings on the projector allow for good air circulation, which keeps the projector lamp cool. Do not obstruct any of the grill openings.*

## *Top view—OSD buttons and LEDs*

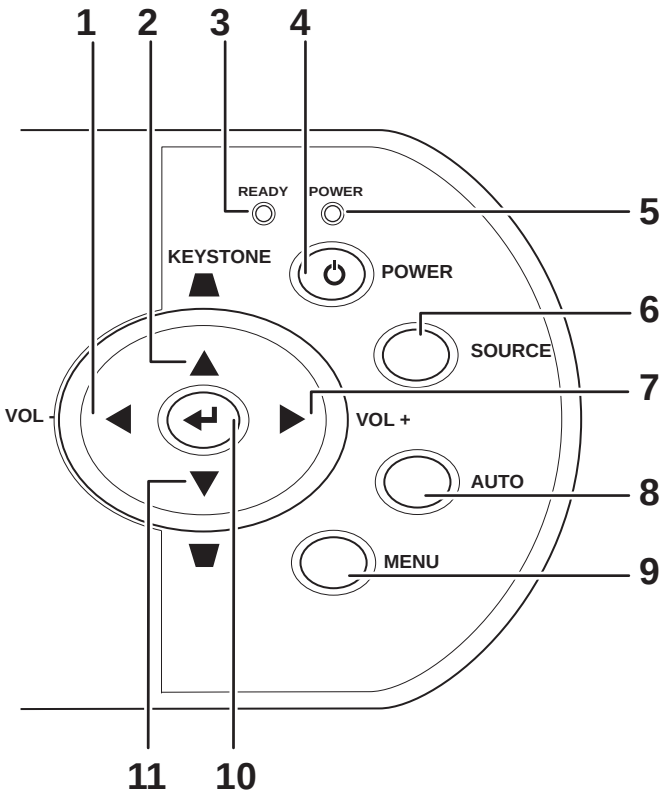


| ITEM | LABEL | DESCRIPTION | | SEE PAGE: |
|---|---|---|---|---|
| **1.** | Volume/<br>left cursor | Decreases volume<br>Navigates and changes settings in the OSD | | ***16*** |
| **2.** | Keystone/<br>Up cursor | Corrects image-trapezoid (narrower top) effect<br>Navigates and changes settings in the OSD | | |
| **3.** | Ready (LED) | Orange | Lamp ready—you can safely turn on or off the projector | |
| | | Flashing | Lamp not ready—do not press the power button | |
| **4.** | Power | Turns the projector on or off (main power switch must be turned on first, see item 8 on page 5) | | ***13*** |
| **5.** | Power (LED) | Green | Projector is powered on and working correctly | |
| | | Off | Projector is powered off | |
| | | Flashing | Operational error code<br>(refer to “LED Error Messages” on page 31) | |
| **6.** | Source | Detects the input device | | ***13*** |
| **7.** | Volume/<br>right cursor | Increases volume<br>Navigates and changes settings in the OSD | | ***17*** |

| ITEM | LABEL | DESCRIPTION | SEE PAGE: |
|---|---|---|---|
| **8.** | Auto | Optimizes image size, position, and resolution | |
| **9.** | Menu | Opens/exits the On-Screen Display (OSD) | |
| **10.** | Enter | Changes settings in the OSD | |
| **11.** | Keystone/<br>Down cursor | Corrects image-trapezoid (narrower bottom) effect<br>Navigates and changes settings in the OSD | |

## *Rear view—connectors*

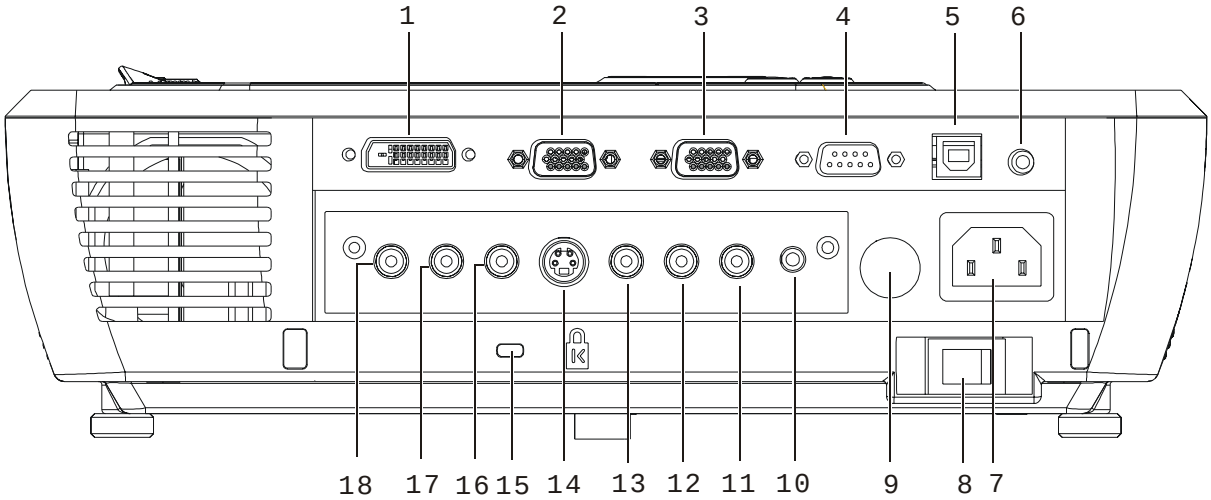


| ITEM | LABEL | DESCRIPTION | SEE PAGE: |
|---|---|---|---|
| **1.** | DVI-IN | Connect the DVI cable (supplied) from a computer | ***13*** |
| **2.** | RGB IN | Connect a VGA cable (not supplied) from a computer | |
| **3.** | RGB OUT | Connect to a monitor | |
| **4.** | RS-232 | Installation control and firmware upgrades | |
| **5.** | USB | Connect the USB cable (supplied) from a computer | |
| **6.** | AUDIO-IN | Connect the audio cable (supplied) from the input device | |
| **7.** | Power connector | Connect the supplied power cord | |
| **8.** | Main power | Turns the main power on or off | |
| **9.** | IR receiver | Receiver for IR signal from remote control | ***9*** |
| **10.** | AUDIO-OUT | Audio out | ***13*** |
| **11.** | AUDIO R | Audio in right | |
| **12.** | AUDIO L | Audio in left | |
| **13.** | VIDEO-IN | Video in | |
| **14.** | S- VIDEO | S-Video in | |
| **15.** | K | Secure to permanent object with a Kensington Lock system | ***29*** |

| ITEM | LABEL | | DESCRIPTION | SEE PAGE: |
|---|---|---|---|---|
| **16.** | Pr/Cr | Component video in | Connect a component video enabled device | ***13*** |
| **17.** | Pb/Cb | | | |
| **18.** | Y | | | |

***Note:***
*If your video equipment has both S-video and RCA jacks ( video) connect to the S-video connector. S-video provides a better quality signal.*

*Bottom view*

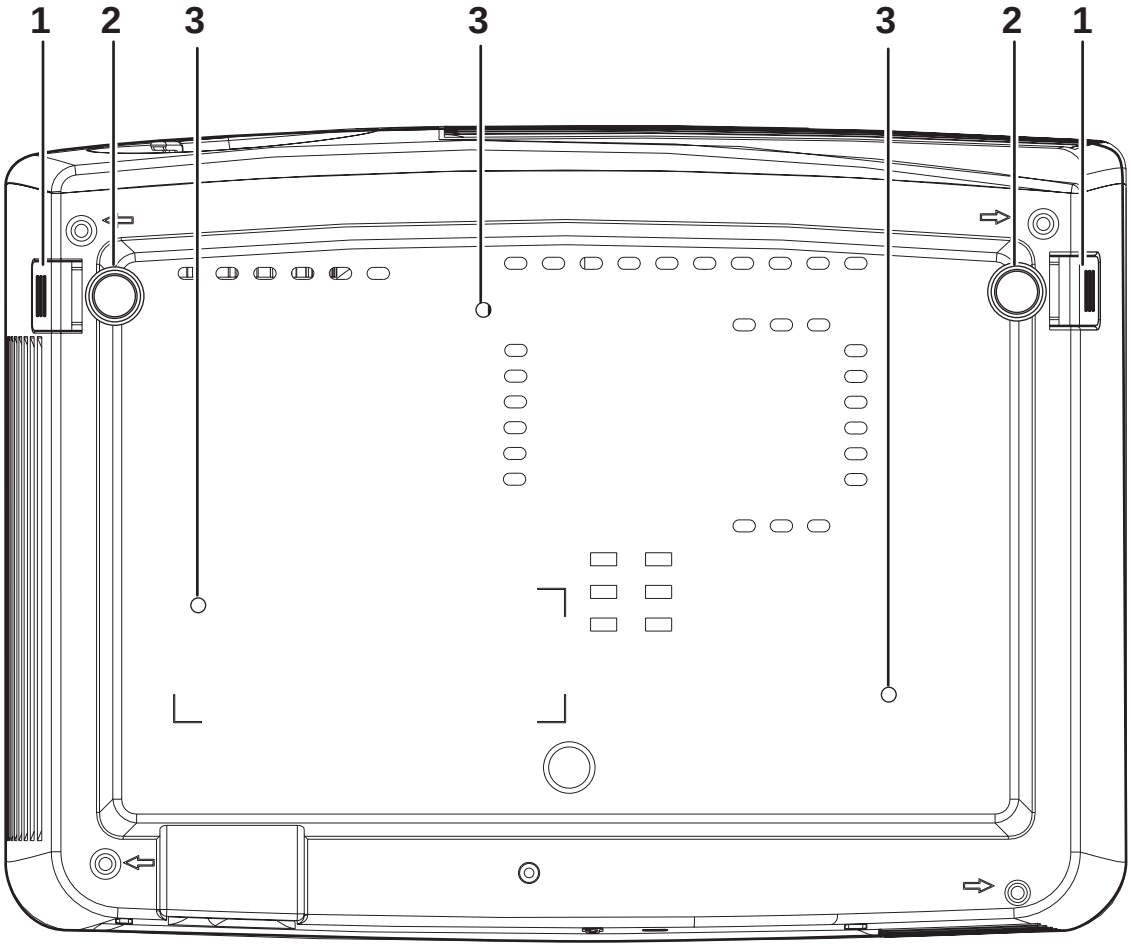


| ITEM | LABEL | DESCRIPTION | SEE PAGE: |
|---|---|---|---|
| **1.** | Height adjuster buttons | Push to release height adjusters | ***14*** |
| **2.** | Height adjusters | Adjusters drop down when adjuster buttons are pushed | |
| **3.** | Ceiling support holes | Contact your dealer for information on mounting the projector on a ceiling. | |

## Name of Remote Control Parts

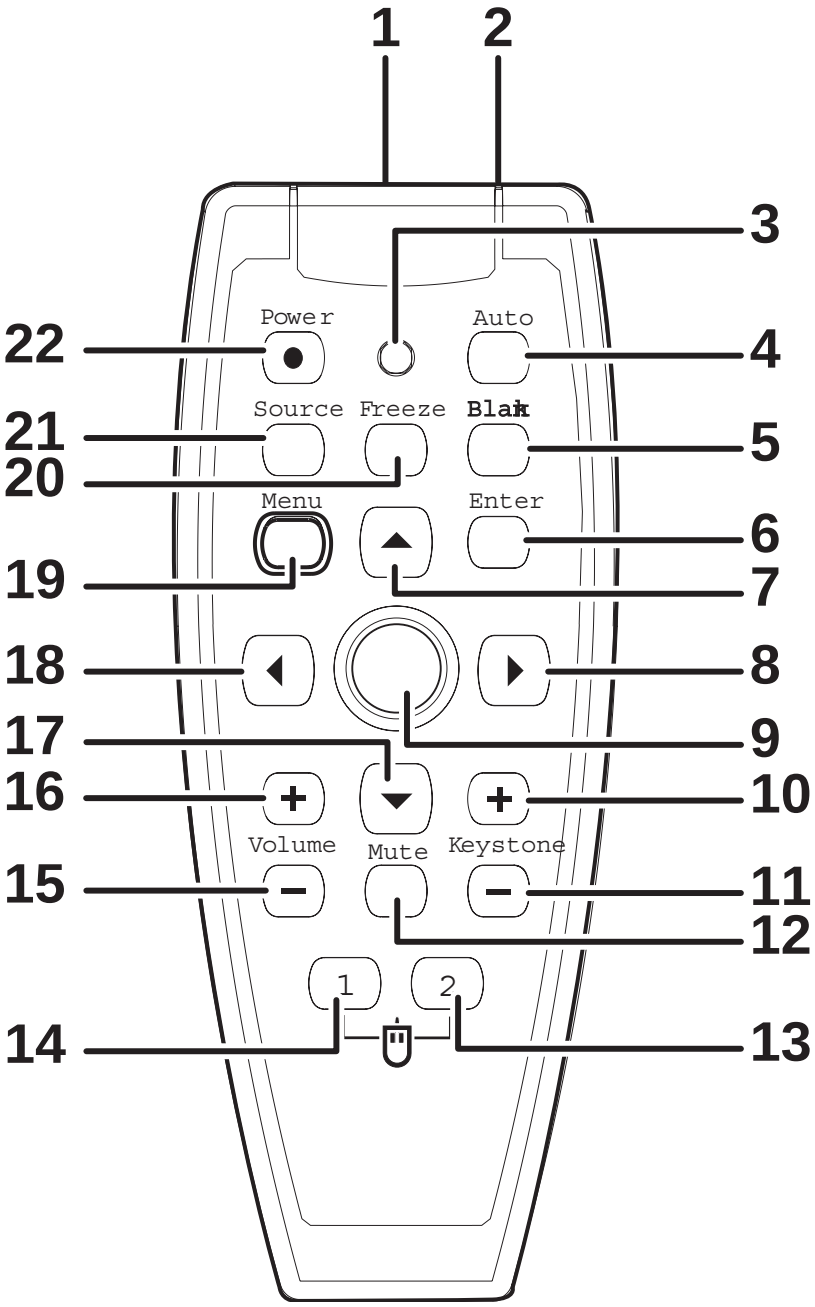


***Important:***
***1.*** *Avoid using the projector with bright fluorescent lighting turned on. Certain high-frequency fluorescent lights can disrupt remote control operation.*

***2.*** *Be sure nothing obstructs the path between the remote control and the projector. If the path between remote and projector is obstructed, you can bounce the remote signal off certain reflective surfaces such as projector screens.*

| ITEM | LABEL | DESCRIPTION | SEE PAGE: |
|---|---|---|---|
| **1.** | Laserpointer | Use as on-screen pointer. DO NOT POINT IN EYES. | |
| **2.** | IR transmitter | Transmits signals to projector | *9* |
| **3.** | Status LED | Lights when the remote control is used | |
| **4.** | Auto | Optimizes image size, position, and resolution | |
| **5.** | Blank | Makes the screen blank | *22* |
| **6.** | Enter | Changes settings in the OSD | *17* |
| **7.** | Up cursor | Navigates and changes settings in the OSD | |
| **8.** | Right cursor | | |
| **9.** | Cursor pad | Moves the on-screen cursor when connected to a PC | |
| **10.** | Keystone top | Corrects image-trapezoid (narrower top/bottom) effect | *15* |
| **11.** | Keystone bottom | | |
| **12.** | Mute | Mutes the built-in speaker | |
| **13.** | Right mouse | Functions as right mouse button when connected to a PC | |
| **14.** | Left mouse | Functions as left mouse button when connected to a PC | |
| **15.** | Volume down | Adjusts volume | *16* |
| **16.** | Volume up | | |
| **17.** | Down cursor | Navigates and changes settings in the OSD | *17* |
| **18.** | Left cursor | | |
| **19.** | Menu | Opens the On-Screen Display (OSD) | |
| **20.** | Freeze | Freeze/unfreezes the on-screen picture | |
| **21.** | Source | Detects the input device | *13* |
| **22.** | Power | Turns the projector on or off | |

## Remote Control Operating Range

The remote control uses infrared transmission to control the projector. It is not necessary to point the remote directly at the projector. The remote functions within a radius of about (7) meters (23 feet) and 30 degrees above or below the projector level. If the projector does not respond to the remote control, move a little closer.

## Projector and Remote Control Buttons

The projector can be operated using the remote control or the buttons on the top of the projector. All operations can be carried out with the remote control; however the buttons on the projector are limited in use. The following illustration shows the corresponding buttons on the remote control and on the projector.

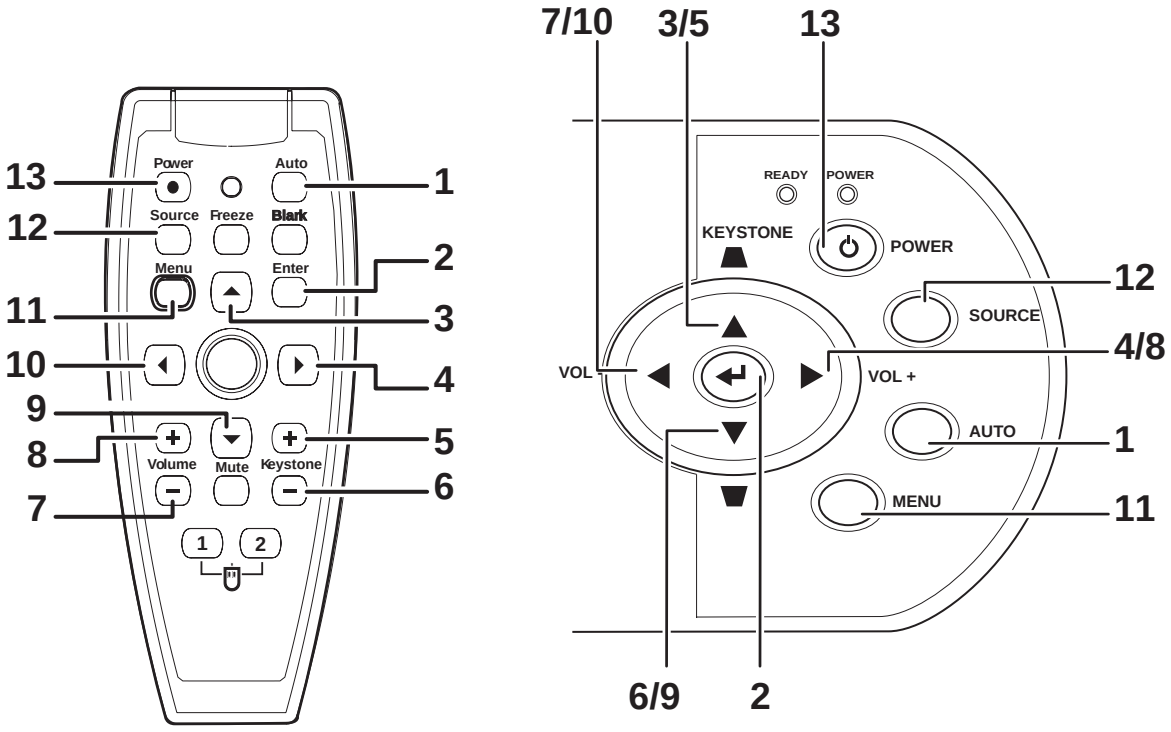


Some buttons on the projector have two functions. For example, item 7/10 on the projector functions both as the volume down button and as the left cursor key in OSD menus.

## Inserting the Remote Control Batteries

1. Remove the battery compartment cover by sliding the cover in the direction of the arrow.

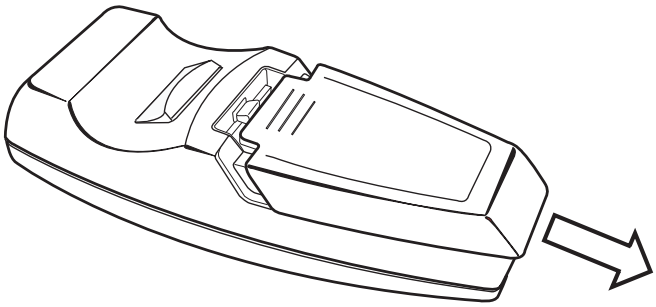

2. Insert the supplied batteries taking note of the polarity (+/-) as shown here.

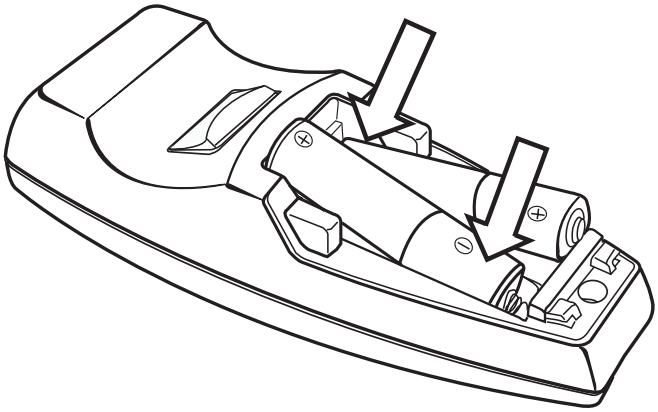

3. Replace the cover.

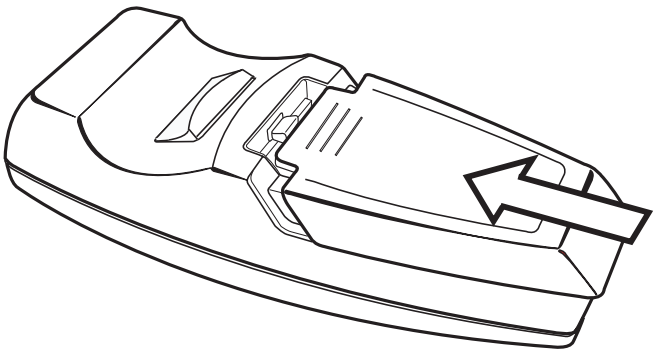

***Caution:***
***1.*** *Only use AAA alkaline batteries.*

***2.*** *Dispose of used batteries according to local ordinance regulations.*

***3.*** *Remove the batteries when not using the projector for prolonged periods.*

## Connecting Input Devices

A PC or notebook computer as well as video devices can be connected to the projector at the same time. Video devices include DVD, VCD, and VHS players, as well as movie camcorders and digital still cameras. Check the user manual of the connecting device to confirm it has the appropriate output connector.

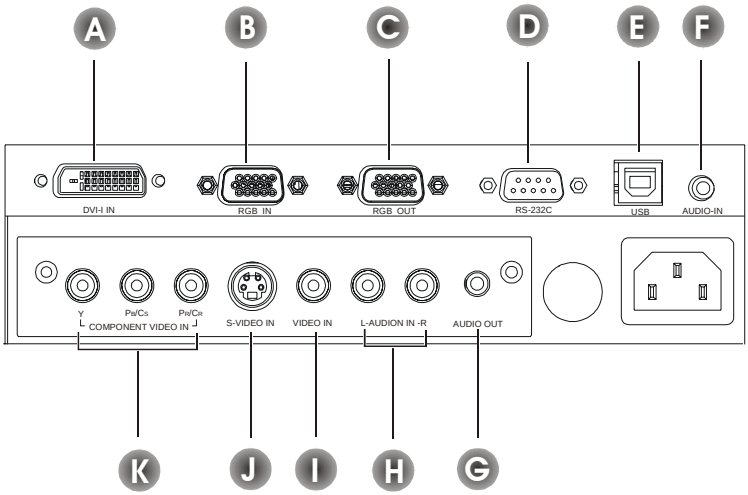


| ITEM | LABEL | DESCRIPTION |
|---|---|---|
| A | DVI-IN | Connect the supplied DVI cable from a computer. |
| B | RGB IN | Connect a VGA cable (not supplied) from a computer. |
| C | RGB OUT | Connect a VGA cable (not supplied) to a monitor. |
| D | RS-232 C | Reserved for installation control and firmware upgrades. |
| E | USB | Connect the supplied USB cable from a computer. |
| F | AUDIO-IN | Audio in |
| G | AUDIO-OUT | Audio out |
| H | L-Audio-R | Audio in |
| I | Video | Video in |
| J | S-video | S-Video in |
| K | Component Video IN | Component in |

***Warning:***
*As a safety precaution, disconnect the power cord to the projector and connecting devices before making connections.*

## Starting and Shutting down the Projector

1. Connect the power cord to the projector. Connect the other end to a wall outlet. (A)
   Turn on the power switch. (B)
   The Power LED and Lamp-ready LED turn on.

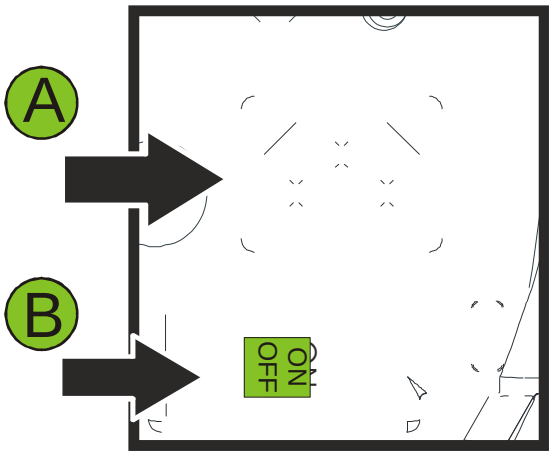


2. Remove the lens cover.

3. Turn on the connected devices.

4. Ensure the Lamp-ready LED is on (not flashing) orange and then press the **Power** button to turn on the projector.

   The projector splash screen displays and connected devices are detected. If the connected device is a PC, press the appropriate Fn hot keys on the computer keyboard to switch the display output to the projector. (Check the PC user manual to determine the appropriate Fn hot keys to change display output.)

5. If more than one input device is connected, press the **Source** button repeatedly to switch among devices.

6. To turn off the projector, press the **Power** button. The projector prepares for shutdown and a “Wait a moment please…” message appears.

7. When the “Power Off?/Press Power again” message appears, press the **Power** button. The projector turns off.

**Attention :** Power off the projector normally and wait until fans stop running before unplug the power cord and moving the projector

## Adjusting the Projector Level

Take note of the following when setting up the projector:

- *The projector table or stand should be level and sturdy.*
- *Position the projector so that it is perpendicular to the screen.*
- *Be sure cables are not in the way or can cause the projector to be knocked over.*

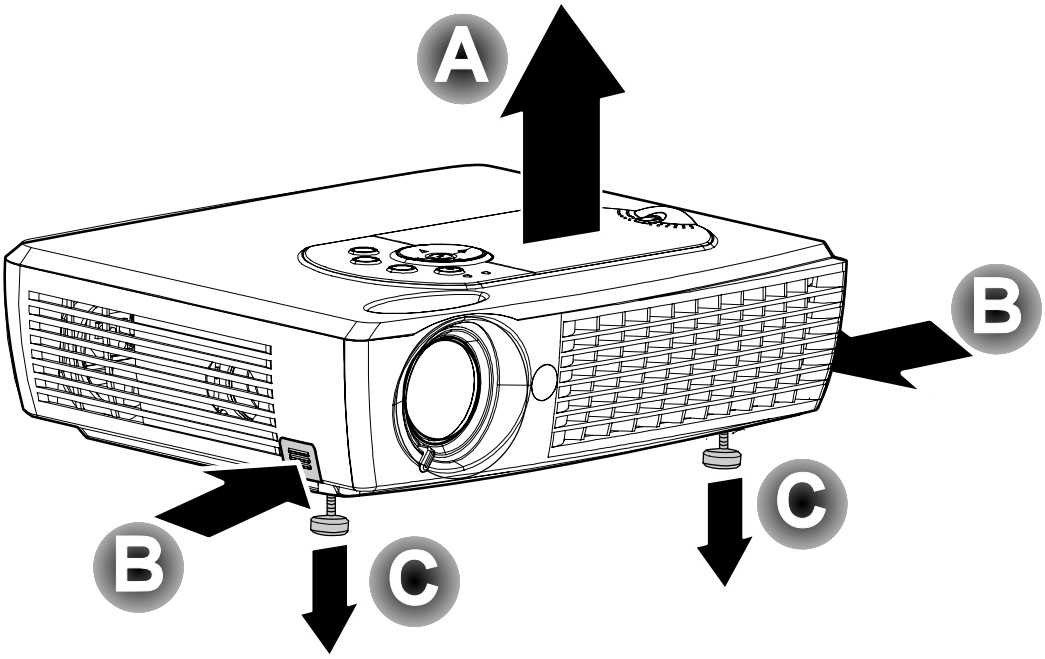


1. To raise the level of the projector, lift the projector **[A]** and press the height-adjuster buttons **[B]**.

   The height-adjusters drop down **[C]**.

2. To lower the level of the projector, press the height-adjuster buttons and push down on the top of the projector.

   Always hold the projector whenever using the elevator buttons to adjust the elevator feet

## Adjust the Zoom, Focus and Keystone

1. Use the **Image-zoom** control (on the projector ) to resize the projected image and screen size A.

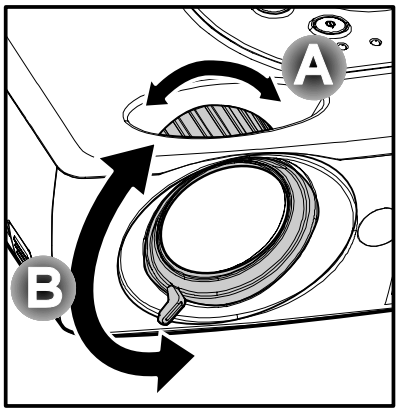


2. Use the **Image-focus** control (on the projector ~~only~~) to sharpen the projected image B

3. Use the **Keystone** buttons (on the projector or the remote control) to correct image-trapezoid (wider top or bottom) effect.

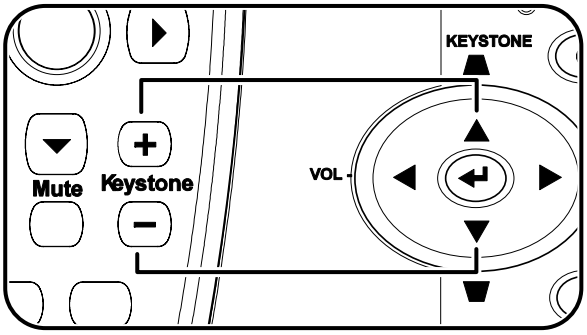


The keystone control appears on the display.

## Adjusting the Volume

1. Press the **Volume** +/- buttons on the projector or the remote control. The volume control appears on the display.

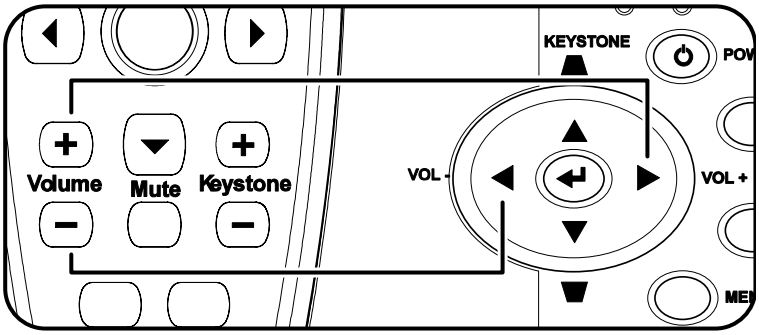


2. Use the **Volume** +/- buttons to adjust the level.

3. Press the **Mute** button (on the remote control ) to turn off the volume.

4. Press **Volume** +/- or **Mute** on the remote control to turn off mute.

# ON-SCREEN DISPLAY MENU SETTINGS

## On-Screen Display Menu Controls

The projector has an On-Screen Display (OSD) that lets you make image adjustments and change various settings.

### *Navigating the OSD*

You can use the remote control or the buttons on the top of the projector to navigate and make changes to the OSD. The following illustration shows the corresponding buttons on the remote control and on the projector.

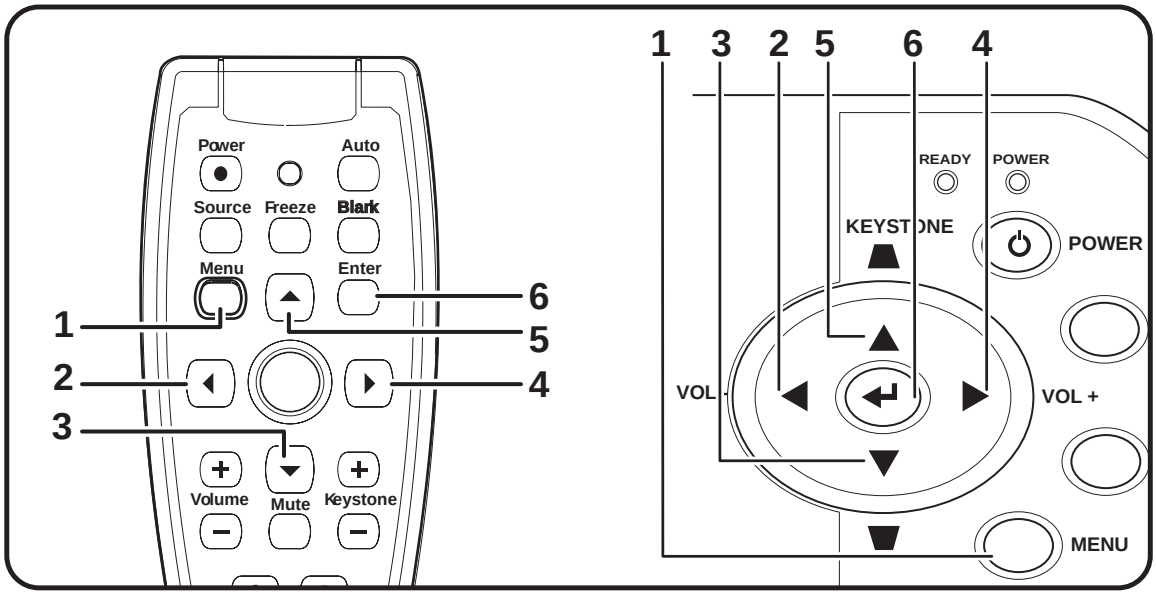

## *Setting the OSD Language*

You may want to reference the OSD on your projector while reading this section. Set the OSD language to your preference before continuing. (The default language is English.)

1. Press the **Menu** button. The **Main** menu appears.

2. Press ◄ ► until **Language** is highlighted.

3. Press ▲▼ until the language you want is highlighted.
4. Press the **Enter** button (↵), to select the language.
5. Press the **Menu** button twice to close the OSD.

## *Main Menu*

Press the **Menu** button to open the **OSD** menu. If necessary, press ◄► to move to the **Main** menu. Press ▲▼ to move up and down in the **Main** menu. Press ◄► to change values for settings, and then press **Enter** to confirm the new setting.

| ITEM | DESCRIPTION | DEFAULT |
|---|---|---|
| Brightness | Press ◄►to adjust the brightness. (Range: 0—100) | 50 |
| Contrast | Press ◄► to adjust the contrast. (Range: 0—100) | 50 |
| Sharpness | Press ◄► to adjust the display sharpness (Range: 1-5) | 3 |
| Color Temperature | Press ◄► to adjust the video tint/hue.<br>(Range: Cool/Normal/Warm) | Normal |
| Color Saturation | Press ◄► to adjust the video saturation. (Range: 0—100) | 50 |
| Color Tint | Press ◄►to adjust the video tint/hue. (Range: 0—100) | 50 |
| Gamma | Press ◄► to adjust the gamma correction of the display.<br>**Input** **Gamma** **Brightness**<br>PC 2.2 High<br>MAC 1.8 High<br>Video 2.4 Low<br>Chart 2.2 Low<br>B&W 2.4 High | PC |
| Color Space | Press ◄► to adjust the color space.<br>(Range: Auto—RGB—YPbPr—YCbCr) | Auto |
| Reset | Resets all **Main** items settings except Color Saturation to default values | - |

*Depending on the video source not all items in the OSD are available. Items that are available for each input source are marked with "X". Items that are not available can not be selected in the OSD.*

| Function | RGB | DVI | Component Video | Video | S-Video |
|---|---|---|---|---|---|
| Brightness | X | X | X | X | X |
| Contrast | X | X | X | X | X |
| Sharpness | X | X | X | X | X |
| Color Temperature | X | X | X | X | X |
| Color Saturation | X | X | X | X | X |
| Color Tint | | | | X | X |
| Gamma | X | X | X | X | X |

## *Setup Menu*

Press the **Menu** button to open the **OSD** menu. Press ◄► to move to the **Setup** menu. Press ▲▼ to move up and down in the **Setup** menu. Press ◄► to change values for settings, and then press **Enter** to confirm the new setting.

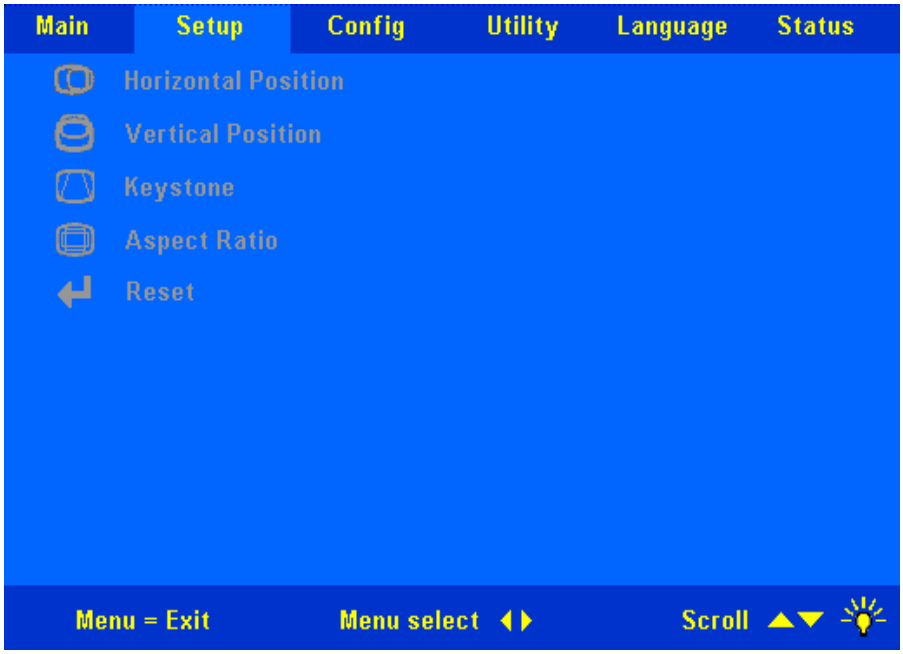


| ITEM | DESCRIPTION | DEFAULT |
|---|---|---|
| Horizontal Position | Press ◄► to move the image left or right. (Range: 0—100) | 50 |
| Vertical Position | Press ◄► to move the image up or down. (Range: 0—100) | 50 |
| Keystone | Press ◄► to correct distortion of the projected image. (Range: -50—50) | 0 |
| Aspect Ratio | Press ◄► to toggle between the 4:3 standard format and 16:9 High Definition TV (HDTV) format. | 4:3 |
| Reset | Resets Keystone and Aspect Ratio to default values | |

Depending on the video source not all items in the OSD are available. Items that are available for each input source are marked with "X". Items that are not available can not be selected in the OSD.

| Function | RGB | DVI | Component Video | Video | S-Video |
|---|---|---|---|---|---|
| Horizontal Position | X | | | | |
| Vertical Position | X | | | | |
| Keystone | X | X | X | X | X |

## Config Menu

Press the **Menu** button to open the **OSD** menu. Press ◄► to move to the **Config** menu. Press ▲▼ to move up and down in the **Config** menu. Press ◄► to change values for settings, and then press **Enter** to confirm the new setting.

| ITEM | DESCRIPTION | DEFAULT |
|---|---|---|
| Blank Screen | Press ◄► to select a background color for blank screen (Range: Black – Red—Green—Blue—White) | Blue |
| Auto Source | Press ◄► to enable or disable automatic source detection (Range: On—Off) | On |
| Auto Power Off | Press ◄► to enable or disable automatic shut-down of lamp after 10 minutes of inactivity (Range: On—Off) | Off |
| Volume | Press ◄► to adjust the audio volume level (Range: 0 - 10) | 5 |
| Menu Position | Press ◄► to position the OSD on screen (Range: Left—Right—Center—Down—Up) | Center |
| Menu Display | Press ◄► to determine the timeout delay of the OSD (Range: 10 - 20 sec.) | 15 |
| Translucent Menu | Press ▲▼ to set menu screen translucency (Range: On—Off) | Off |
| Reset | Resets all Config screen items to default values | |

## *Utility Menu*

Press the **Menu** button to open the **OSD** menu. Press ◄► to move to the **Utility** menu. Press ▲▼ to move up and down in the **Utility** menu. Press ◄► to change values for settings, and then press **Enter** to confirm the new setting.

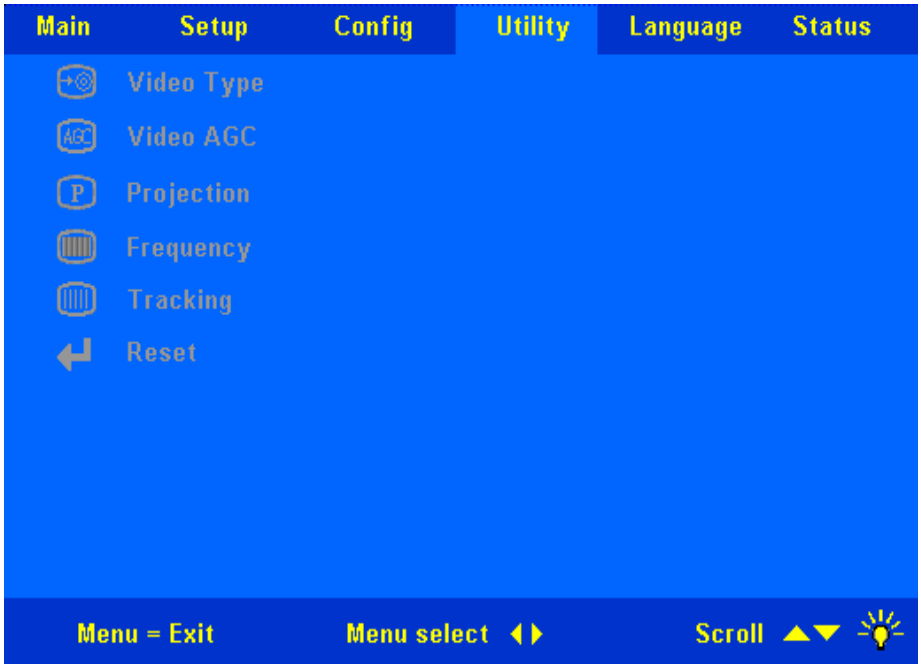


| ITEM | DESCRIPTION | DEFAULT |
|---|---|---|
| Video Type | Press ◄► to select the video standard. (Range: Auto—NTSC—PAL—SECAM) | Auto |
| Video AGC | Press ◄► to enable or disable automatic gain control for the video source. (Range: On—Off) | On |
| Projection | Press ◄► to choose from four projection methods:<br>P Desktop mount, front of screen<br>ꟼ Desktop mount, rear of screen<br>d Ceiling mount, front of screen<br>b Ceiling mount, rear of screen | Desktop front<br>P |
| Frequency | Press ◄► to adjust the A/D sampling clock. (Range: 0—180) | Auto detected |
| Tracking | Press ◄► to adjust the A/D sampling number. (Range: 0—100) | Auto detected |
| Reset | Resets Video Type, Video AGC, and Projection to default values | |

## *Language Menu*

Press the **Menu** button to open the **OSD** menu. Press ◄ ► to move to the **Language** menu. Press ▲▼ to move up and down in the **Language** menu.

| ITEM | DESCRIPTION | DEFAULT |
|---|---|---|
| English | Press the cursor ▲▼ button to move up and down in the menu.<br><br>Press the **Enter** button to select the language. | English |
| French | | |
| German | | |
| Italian | | |
| Spanish | | |
| Swedish | | |
| Chinese Simplified | | |
| Chinese Traditional | | |
| Japanese | | |
| Korean | | |

## *Status Menu*

Press the **Menu** button to open the **OSD** menu. Press ◄ ► to move to the **Status** menu. Press ▲▼ to move up and down in the **Status** menu. Press ◄ ► to change values for settings, and then press **Enter** to confirm the new setting.

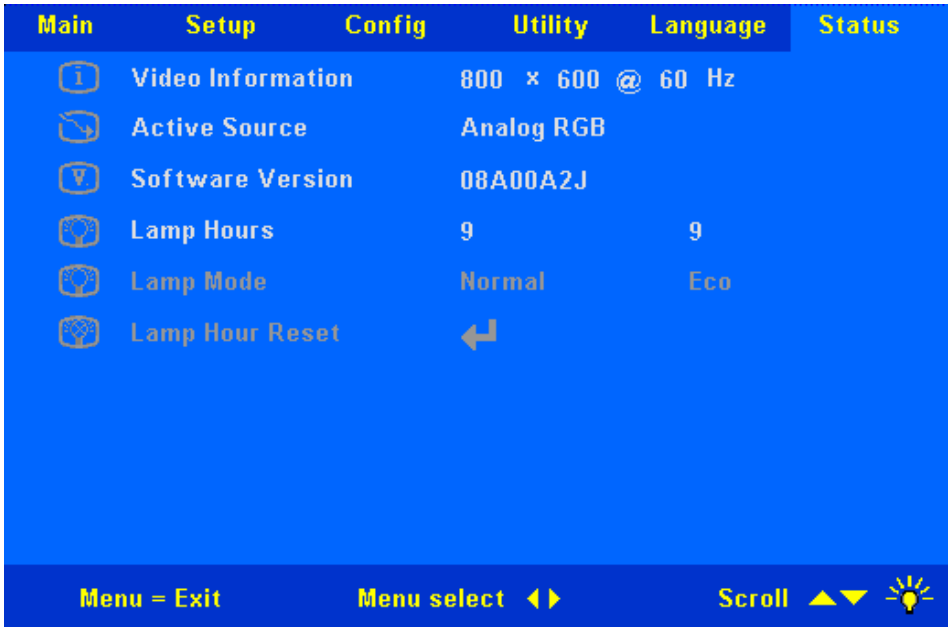


| ITEM | DESCRIPTION | DEFAULT |
|---|---|---|
| Video Information | Displays the resolution and refresh rate of the connected video device. | These items are display only. |
| Active Source | Displays the active source. | |
| Software Version | Information about the firmware version. | |
| Lamp Hours | Number of hours lamp has been in Normal use and number of hours lamp has been in Eco use. | |
| Lamp Mode | Toggles between Normal and ECO lamp modes. ECO mode uses less power but decreases the lamp brightness. | Normal |
| Lamp Hour Reset | After replacing the lamp, this item should be reset. Refer to “Replacing the Projection Lamp” on page 26. | — |

## Replacing the Projection Lamp

The lamp of the projector has a limited lifetime of approximately 2000 hours. If the projected image appears dark or red lamp life indicator bar displays during projector startup, you should change the lamp.

***Important:***
***1.*** *The lamp contains a certain amount of mercury and should be disposed of according to local ordinance regulations.*

***2.*** *Avoid touching the glass surface of the new lamp: Doing so may shorten its operation life.*

***Warning:***
***1.*** *Be sure to turn off and unplug the projector at least an hour before replacing the lamp. Failure to do so could result in a severe burn.*

***2.*** *It is recommended that you do not attempt to replace the lamp while the projector is installed on a ceiling. If you do attempt this, wear protective goggles to prevent glass from a ruptured lamp getting into your eyes.*

1. Lift the screw cover (**A**). Remove the screw on the lamp compartment cover (**B**) and then lift the lamp compartment cover (**C**).

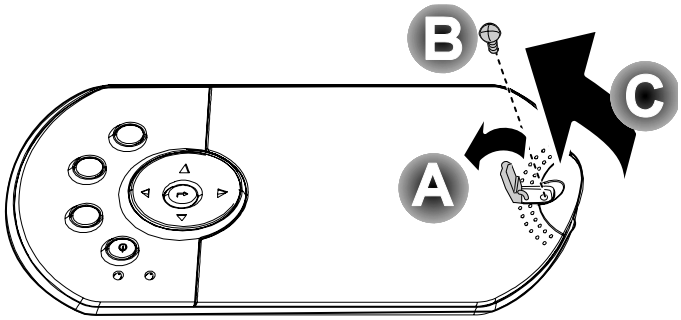


2. Remove the two screws from the lamp module (**A**) and then lift the module handle up (**B**).

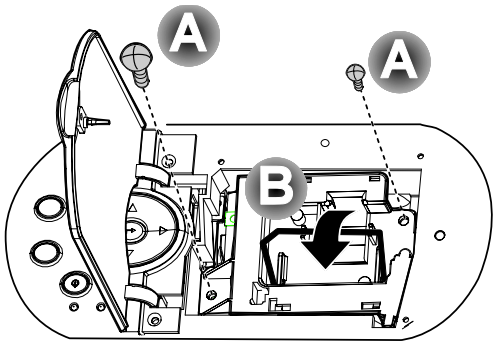


3. Pull up firmly to remove the lamp module.

4. Reverse Steps 1 to 3 to install the new lamp module.
**Note:** The lamp module should be oriented as shown here when replacing.

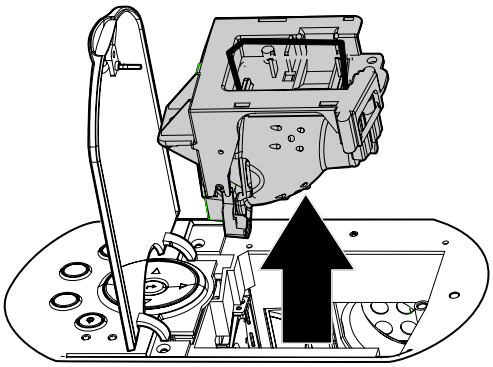

## *Resetting the Lamp*

After replacing the lamp, reset the lamp hour counter to zero. Refer to the following:

1. Press the **Menu** button to open the Main menu.

2. Press the cursor ◄ ► button to move to the **Status** menu.

3. Press the cursor ▲▼ button to move to **Lamp Hour Reset**.

4. Press the **Enter** button.
A message screen appears.

5. Press the cursor buttons in this order: ▼; ▲; ◄; ►.

The "Lamp Hour Reset OK !!" message appears. Then the **Status** menu appears again showing the **Lamp Hours** reset to zero.

## Cleaning the Projector

Cleaning the projector to remove dust and grime will help ensure trouble-free operation.

***Warning:***
***1.*** *Be sure to turn off and unplug the projector at least an hour before cleaning. Failure to do so could result in a severe burn.*

***2.*** *Use only a dampened cloth when cleaning. Do not allow water to enter the ventilation openings on the projector.*

***3.*** *If a little water gets into the projector interior while cleaning, leave unplugged in a well-ventilated room for several hours before using.*

***4.*** *If a lot of water gets into the projector interior when cleaning, have the projector serviced.*

### *Cleaning the Lens*

You can purchase optic lens cleaner from most camera stores. Refer to the following to clean the projector lens.

1. Apply a little optic lens cleaner to a clean soft cloth. (Do not apply the cleaner directly to the lens.)
2. Lightly wipe the lens in a circular motion.

***Caution:***
***1.*** *Do not use abrasive cleaners or solvents.*

***2.*** *To prevent discoloration or fading, avoid getting cleaner on the projector case.*

### *Cleaning the Case*

Refer to the following to clean the projector case.

1. Wipe off dust with a clean dampened cloth.
2. Moisten the cloth with warm water and mild detergent (such as used to wash dishes), and wipe the case.
3. Rinse all detergent from the cloth and wipe the projector again.

***Caution:***
*To prevent discoloration or fading of the case, do not use abrasive alcohol-based cleaners.*

## Using the Kensington Lock

If you are concerned about security, attach the projector to a permanent object with the Kensington slot and a security cable.

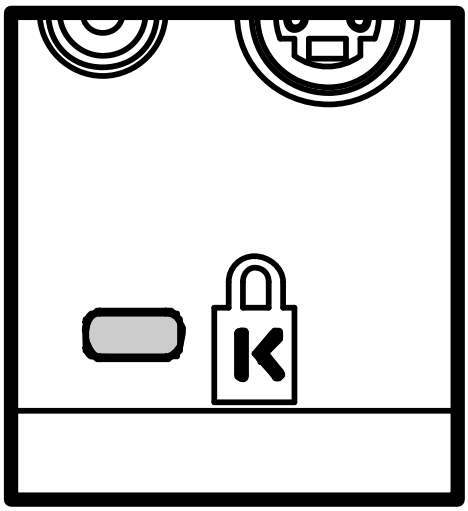

***Note:***
*Contact your vendor for details on purchasing a suitable Kensington security cable.*

# TROUBLESHOOTING

## Common problems and solutions

These guidelines provide tips to deal with problems you may encounter while using the projector. If the problem remains unsolved, contact your dealer for assistance.

Often after time spent troubleshooting, the problem is traced to something as simple as a loose connection. Check the following before proceeding to the problem-specific solutions.

- *Use some other electrical device to confirm that the electrical outlet is working.*
- *Ensure the projector is turned on.*
- *Ensure all connections are securely attached.*
- *Ensure the attached device is turned on.*
- *Ensure a connected PC is not in suspend mode.*
- *Ensure a connected notebook computer is configured for an external display. (This is usually done by pressing an Fn-key combination on the notebook.)*

## Tips for Troubleshooting

In each problem-specific section, try the steps in the order suggested. This may help you to solve the problem more quickly.

Try to pin point the problem and thus avoid replacing non-defective parts.
For example, if you replace batteries and the problem remains, put the original batteries back and go to the next step.

Keep a record of the steps you take when troubleshooting: The information may be useful when calling for technical support or for passing on to service personnel.

## LED Error Messages

| LED | STATUS/ NUMBER OF FLASHES | DESCRIPTION | REMEDY |
|---|---|---|---|
| Power | Flashing | Lamp not ready | Do not press the power button. |
| | 3 | System overheated | Allow the projector to cool down. |
| | 4 | System interface error | Contact your dealer for assistance. |
| | 5 | Lamp error | Replace the lamp module. |
| | 6 | Fan error | Refer to **Ready** LED status in this table to determine which fan. |
| | 7 | Lamp cover open | Close the lamp cover. |
| | 8 | DLP driver error | Contact your dealer for assistance. |
| | 9 | Color wheel error | |
| Ready | Flashing | Valid only when fan error indicated by **Power** LED flashing 6 times. | |
| | 1 | Power fan | Contact your dealer for assistance. |
| | 2 | Blower fan | |
| | 3 | Lamp fan or Optical fan | |

## Image Problems

### *Problem: No image appears on the screen*

1. Verify the settings on your notebook or desktop PC.
2. Turn off all equipment and power up again in the correct order.

### *Problem: The image is blurred*

1. Adjust the **Focus** on the projector.
2. Press the **Auto** button on the remote control or projector.
3. Ensure the projector-to-screen distance is within the 8-meter (26-feet) specified range.
4. Check that the projector lens is clean.
5. Make sure the output resolution from the PC is 800 x 600 (SVGA model) or 1024 x 768 (XGA model), the native resolution of the projector.

### *Problem: The image is wider at the top or bottom (trapezoid effect)*

1. Position the projector so it is as perpendicular to the screen as possible.
2. Use the Keystone button on the remote control or projector to correct the problem.

### *Problem: The image is reversed or upside down*

1. Check the **Projection** setting on the **Utility** menu of the OSD.

### *Problem: The image is streaked*

1. Set the **Frequency** and **Tracking** settings on the **Utility** menu of the OSD to the default settings.
2. To ensure the problem is not caused by a connected PC's video card, connect to another computer.

***Problem: The image is flat with no contrast***

1. Adjust the **Contrast** setting on the **Main** menu of the OSD.

***Problem: The color of the projected image does not match the source image.***

1. Adjust the **Color Temperature** and **Gamma** settings on the **Main** menu of the OSD.

## Lamp Problems

***Problem: There is no light from the projector***

1. Check that the power cable is securely connected.
2. Ensure the power source is good by testing with another electrical device.
3. Restart the projector in the correct order and check that the Power LED is green.
4. If you have replaced the lamp recently, try resetting the lamp connections.
5. Replace the lamp module.
6. Put the old lamp back in the projector and have the projector serviced.

***Problem: The lamp goes off***

1. Power surges can cause the lamp to turn off. Press the power button twice to turn off the projector. When the Lamp Ready LED is on, press the power button.
2. Replace the lamp module.
3. Put the old lamp back in the projector and have the projector serviced.

## Remote Control Problems

***Problem: The projector does not respond to the remote control***

1. Direct the remote control towards the remote sensor on the projector.
2. Ensure the path between remote and sensor is not obstructed.
3. Turn off any fluorescent lights in the room.
4. Check the battery polarity of the remote control.
5. Replace the batteries.
6. Turn off other Infrared-enabled devices in the vicinity.
7. Have the remote control serviced.

## Audio Problems

***Problem: There is no sound***

1. Adjust the projector volume.
2. Adjust the volume of the audio source.
3. Check the audio cable connection.
4. Test the source audio output with other speakers.
5. Have the projector serviced.

***Problem: The sound is distorted***

1. Check the audio cable connection.
2. Test the source audio output with other speakers.
3. Have the projector serviced.

## Having the Projector Serviced

If you are unable to solve the problem, you should have the projector serviced. Pack the projector in the original carton. Include a description of the problem and a checklist of the steps you took when trying to fix the problem. The information may be useful to the service personnel. Return the projector to the place you purchased it.

# SPECIFICATIONS

## Specifications

| | |
|---|---|
| Power consumption | < 280 watts |
| Lamp | 200W (ECO mode 160W) |
| Technology | TI DMD 0.7-inch, 12 deg. DDR |
| Resolution | XGA 1024 x 768 native |
| Supported resolution | Up to SXGA 1280 x 1024 @ 60 Hz |
| Color | 16.7 Million (24-bits/pixel) |
| Weight | 3.55 kg (7.8 lbs) |
| Projection distance | 1.5 to 8 meter (4.9 to 26 feet) |
| Projection screen size | 0.94 to 6.1 meter (37 inches to 240 inches) |
| Projection lens | Manual zoom and focus |
| Zoom ratio | 1.22:1 |
| Vertical keystone correction | + / - 15 |
| Projection methods | Desktop front/rear; ceiling front/rear |
| Data Compatibility | IBM PC or compatibles (VGA, SVGA), Mac |
| HDTV | Video |
| Video compatibility | NTSC/NTSC 4.43, PAL (B/G/H/I/M/N 60), SECAM |
| H-Sync | 15,31 - 70 kHz |
| V-Sync | 50 - 85 Hz |
| Safety certification | FCC Class B, UL, CUL, CE, CB, TUV-GS, |
| Operation temperature | 10° ~ 35° |
| Dimensions | 32.8 x 23.8 x 8.8 cm (12.9 x 9.4 x 3.5 inches) |
| Standby | < 20 watts |
| Audio speaker | 2W mono speaker |
| Uniformity | 80 % |

## *Input/output connectors*

| | |
|---|---|
| PC | DVI-I |
| | RGB in |
| | RGB out |
| | USB |
| Video | Composite video (RCAx1) |
| | S-Video (Mini-DIN) |
| | Component video Y,Pb/Cb,Pr/Cr (RCAx3) |
| Audio | Mini-jack in |
| | Mini-jack out |
| | Right and left in (RCAx2) |
| Service/upgrades | RS-232 |
| Security | Kensington slot |

## Projection Distance versus Projection Size

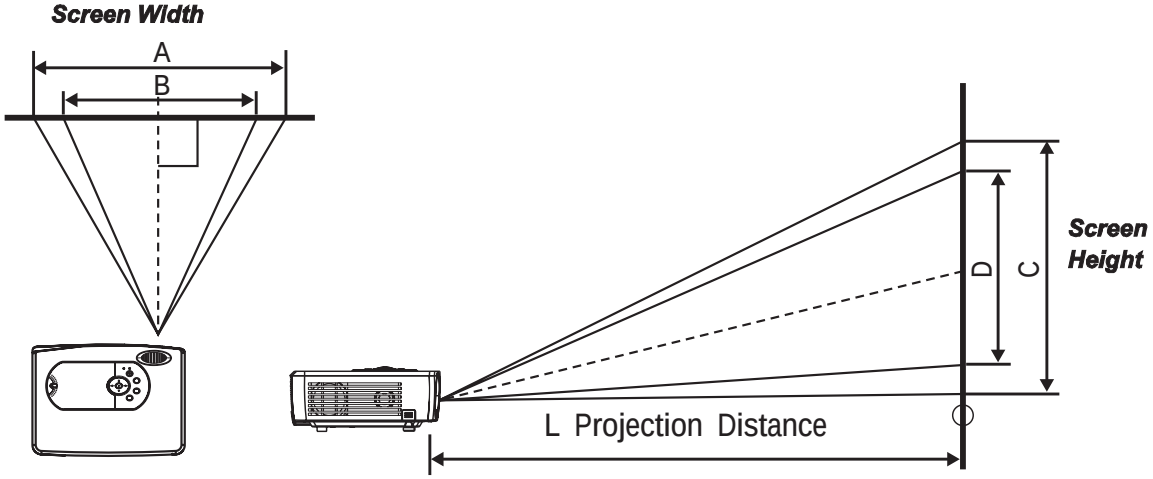


| Projection Distance | Max. Screen Size | | | Min. Screen Size | | |
|---|---|---|---|---|---|---|
| | Diagonal | Width | Height | Diagonal | Width | Height |
| L | | A | C | | B | D |
| 1.5m | 1.14m | 0.91m | 0.68m | 0.94m | 0.75m | 0.56m |
| 4.92' | 45" | 36" | 27" | 36.88" | 29.5" | 22.1" |
| 2m | 1.52m | 1.22m | 0.91m | 1.25m | 1m | 0.75m |
| 6.56' | 60" | 48" | 36" | 49.18" | 39.34" | 29.51" |
| 2.4m | 1.83m | 1.46m | 1.1m | 1.5m | 1.20m | 0.90m |
| 7.87' | 72" | 57.6" | 43.2" | 59" | 47.2" | 35.4" |
| 2.8m | 2.13m | 1.71m | 1.28m | 1.75m | 1.4m | 1.05m |
| 9.18' | 84" | 67.2" | 50.4" | 68.85" | 55.08" | 41.31" |
| 3.2m | 2.44m | 1.95m | 1.46m | 2m | 1.6m | 1.20m |
| 10.5' | 86" | 68.8" | 51.6" | 70.49" | 56.39" | 42.29" |
| 3.6m | 2.74m | 2.19m | 1.65m | 2.25m | 1.80m | 1.35m |
| 11.81' | 108" | 86.4" | 64.8" | 88.52" | 70.82" | 53.11" |
| 4m | 3.05m | 2.44m | 1.83m | 2.5m | 2.00m | 1.50m |
| 13.12' | 120" | 96" | 72" | 98.36" | 78.69" | 59.02" |
| 4.4m | 3.35m | 2.68m | 2.01m | 2.75m | 2.2m | 1.65m |
| 14.43' | 132" | 105.6" | 79.2" | 108.19" | 86.55" | 64.91" |
| 4.8m | 3.66m | 2.93m | 2.19m | 3.00m | 2.40m | 1.80m |
| 15.74' | 144" | 115.2" | 86.4" | 118.03" | 94.42" | 70.82" |
| 5.2m | 3.96m | 3.17m | 2.38m | 3.25m | 2.60m | 1.95m |
| 17.06' | 156" | 124.8" | 93.6" | 127.86" | 102.29" | 76.72" |
| 5.6m | 4.27m | 3.41m | 2.56m | 3.50m | 2.80m | 2.10m |
| 18.37' | 168" | 134.4" | 100.8" | 137.7" | 110.16" | 82.62" |
| 6m | 4.57m | 3.66m | 2.74m | 3.75m | 3.00m | 2.25m |
| 19.68' | 180" | 144" | 108" | 147.54" | 118.03" | 88.52" |
| 8m | 6.10m | 4.88m | 3.66m | 5.00m | 4.00m | 3.00m |
| 26.24' | 240" | 192" | 144" | 196.72" | 157.38" | 118.03" |

## Timing Mode Table

The native resolution is 1024 x 768. Resolution other than native mode may display with uneven size of text or lines.

The following table shows the supported timing modes.

| Signal | Resolution | Frequency H. ( KHz ) | Frequency V. ( Hz ) | Video | Digital | Analog |
|---|---|---|---|---|---|---|
| NTSC | -- | 15.734 | 60.0 | O | -- | -- |
| PAL / SECAM | -- | 15.625 | 50.0 | O | -- | -- |
| VESA | 640 x 350 | 37.9 | 85.1 | -- | O | O |
| | 720 x 400 | 31.5 | 70.0 | -- | O | O |
| | 720 x 400 | 37.9 | 85.0 | -- | O | O |
| | 640 x 480 | 31.5 | 60.0 | -- | O | O |
| | 640 x 480 | 37.9 | 72.8 | -- | O | O |
| | 640 x 480 | 37.5 | 75.0 | -- | O | O |
| | 640 x 480 | 43.3 | 85.0 | -- | O | O |
| | 800 x 600 | 37.9 | 60.3 | -- | O | O |
| | 800 x 600 | 46.9 | 75.0 | -- | O | O |
| | 800 x 600 | 48.1 | 72.2 | -- | O | O |
| | 800 x 600 | 53.7 | 85.1 | -- | O | O |
| | 1024 x 768 | 48.4 | 60.0 | -- | O | O |
| | 1024 x 768 | 56.5 | 70.1 | -- | O | O |
| | 1024 x 768 | 60.0 | 75.0 | -- | O | O |
| | 1024 x 768 | 68.7 | 85.0 | -- | O | O |
| Apple Macintosh | 640 x 480 | 35.0 | 66.7 | -- | O | O |
| | 832 x 624 | 49.7 | 74.5 | -- | O | O |
| | 1024 x 768 | 60.2 | 74.9 | -- | O | O |
| | 1152 x 870 | 68.7 | 75.1 | -- | O | O |
| HDTV | 1920 x 1080 | 33.8 | 60.0 | O | -- | -- |
| | 1920 x 1080 | 28.1 | 50.0 | O | -- | -- |
| | 1280 x 720 | 45.0 | 60.0 | O | -- | -- |
| SDTV | 720 x 576 | 31.3 | 50.0 | O | -- | -- |
| | 720 x 480 | 31.5 | 60.0 | O | -- | -- |

O Frequency supported

-- Frequency not supported

## Dimensions

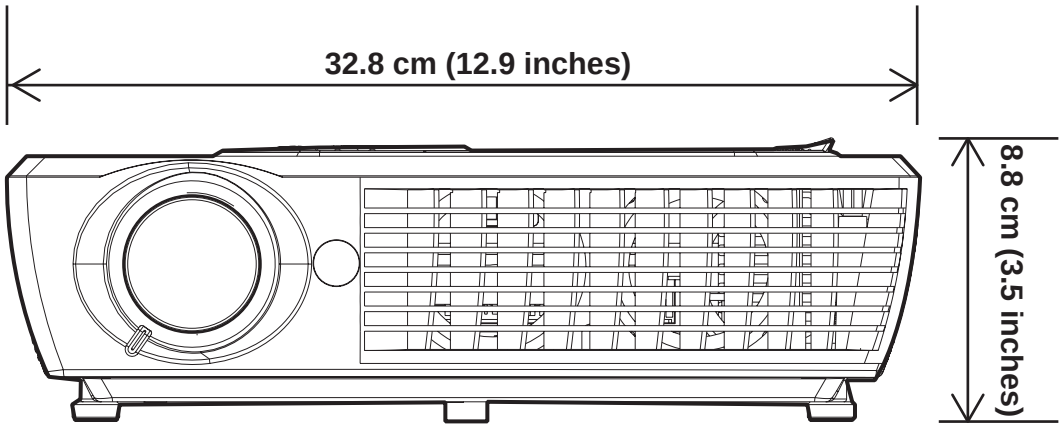


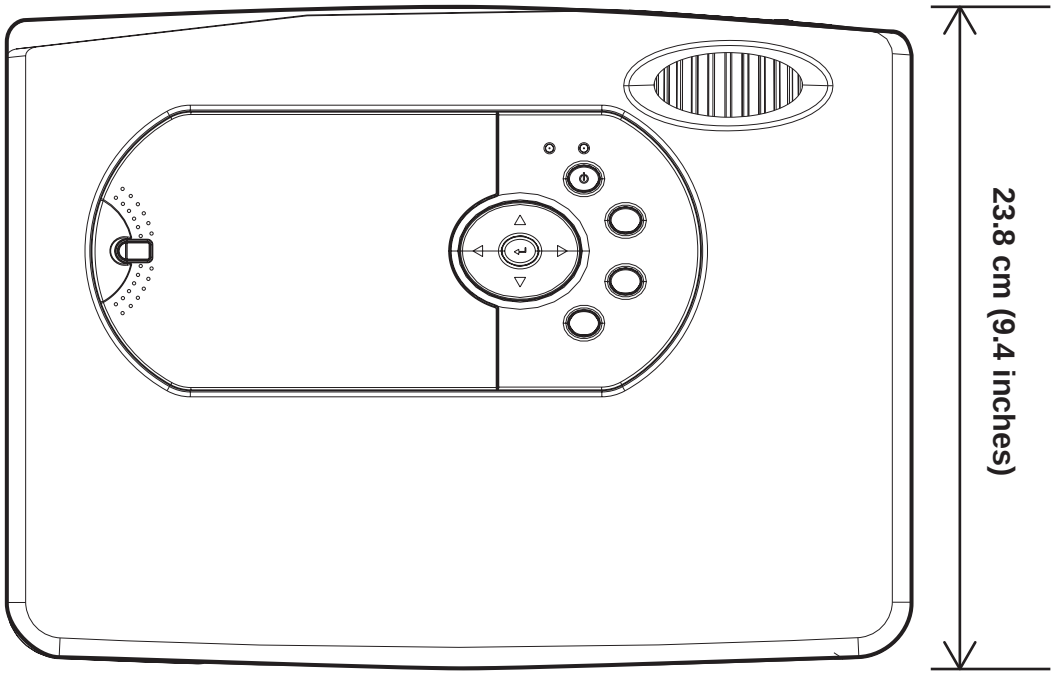

# REGULATORY COMPLIANCE

## FCC Warning

This equipment has been tested and found to comply with the limits for a Class B digital device pursuant to Part 15 of the FCC Rules. These limits are designed to provide reasonable protection against harmful interference when the equipment is operated in a commercial environment.

This equipment generates, uses, and can radiate radio frequency energy and, if not installed and used in accordance with the instruction manual, may cause harmful interference to radio communications. Operation of this equipment in a residential area is likely to cause harmful interference in which case the user will be required to correct the interference at his own expense.

Changes or modifications not expressly approved by the parties responsible for compliance could void the user's authority to operate the equipment.

## Canada

This class B digital apparatus complies with Canadian ICES-003.

## Safety Certifications

UL, CUL, CB, TUV-GS,

## EN 55022 Warning

This is a Class B product. In a domestic environment, it may cause radio interference, in which case the user may be required to take adequate measures. The typical use is in a conference room, meeting room, or auditorium.

Liesegang
projection technology

**Liesegang Optoelectronics GmbH**
Kaistrasse 21
D-40221 Duesseldorf

Telefon 0211/ 3901-1
Telefax 0211/ 3901-227
info@liesegang.de
www.liesegang.de

**Liesegang Corp.**
1001 W. Cypress Creek Rd. 103
Ft. Lauderdale, FL 33309
USA
phone (954) 489 23 01
fax (954) 489 23 18
info@liesegangcorp.com
www.liesegangcorp.com