myprojectorlamps.com

The most trusted, dependable name in projector lamp sales.

http://www.myprojectorlamps.com

http://www.myprojectorlamps.ca

http://www.myprojectorlamps.eu

The following projector manual has not been modified or altered in any way.

LG

LG DLP PROJECTOR

Please read this manual carefully before operating your set.
Retain it for future reference.
Record model number and serial number of the set.
See the label attached on the bottom of the set and quote this information to your dealer when you require service.

Model number :
Serial number :

AN215

OWNER'S MANUAL

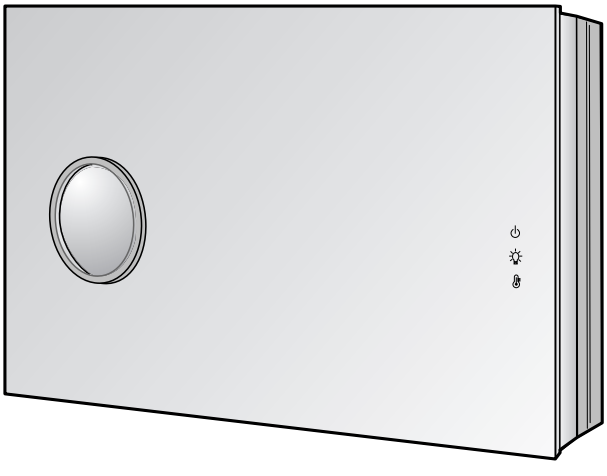

DLP PROJECTOR

FCC NOTICE

- **A Class B digital device**
  This equipment has been tested and found to comply with the limits for a Class B digital device, pursuant to Part 15 of the FCC Rules. These limits are designed to provide reasonable protection against harmful interference in a residential installation. This equipment generates, uses and can radiate radio frequency energy and, if not installed and used in accordance with the instructions, may cause harmful interference to radio communications. However, there is no guarantee that interference will not occur in a particular installation. If this equipment does cause harmful interference to radio or television reception, which can be determined by turning the equipment off and on, the user is encouraged to try to correct the interference by one or more of the following measures:
  - Reorient or relocate the receiving antenna.
  - Increase the separation between the equipment and receiver.
  - Connect the equipment into an outlet on a circuit different from that to which the receiver is connected.
  - Consult the dealer or an experienced radio/TV technician for help.
- **Any changes or modifications not expressly approved by the party responsible for compliance could void the user's authority to operate the equipment.**

Warning
This is a class B product. In a domestic environment this product may cause radio interference, in which case the user may be required to take adequate measures.

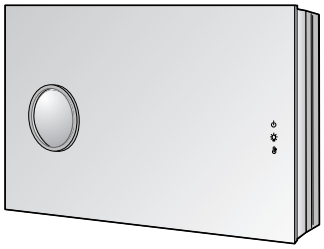

ENGLISH

Contents

Introduction
Safety Instructions 4

Part Descriptions
Main Body 7
Control Panel 8
Remote Control 9
Installing Batteries 9
Projector Status Indicators 10
Accessories 11
Optional Extras 11

Installing and Composition
Installation Instructions 12
Basic Operation of the Projector 13
Installing the projector to the wall 14
Turning on the Projector 22
Turning off the Projector 22
Selecting source mode 22
Focus, Zoom, Position of the Screen Image 23

Connection
Connecting to a Desktop PC 24
Connecting to a Notebook PC 24
Connecting to a Video Source 25
Connecting to a DVD 25
Connecting to a D-TV Set-Top Box 26

Function

Video Menu Options
Adjusting Video 27
APC (Auto Picture Control) 27
Auto Color Temperature Control 28
Gamma Function 28
Brilliant Color ™ Function 28
White peaking Function 29
Black Level Function 29
Smart Iris Function 29

Special Menu Options
Selecting Language 30
Using ARC Function 30
Overscan Function 31
Flip horizontal Function 31
Auto sleep Function 31
Using Keystone function 32
Using Blank function 32
Selecting Blank image color 32
Lamp mode Function 33
Checking Lamp time 33
Using Still function 33

Screen Menu Options
Auto configure Function 34
Using Phase Function 34
Using Clock Function 34
Using Horizontal Function 35
Using Vertical Function 35

Information
Supported Monitor Display 36
Maintenance 37
Replacing the Lamp 38
Memo 41
Specifications 43

Disposal of your old appliance

1. When this crossed-out wheeled bin symbol is attached to a product it means the product is covered by the European Directive 2002/96/EC.
2. All electrical and electronic products should be disposed of separately from the municipal waste stream via designated collection facilities appointed by the government or the local authorities.
3. The correct disposal of your old appliance will help prevent potential negative consequences for the environment and human health.
4. For more detailed information about disposal of your old appliance, please contact your city office, waste disposal service or the shop where you purchased the product.

Safety Instructions

Please take note of the safety instructions to prevent any potential accident or misuse of the projector.

➟ Safety Instructions are given in two forms as detailed below.

⚠ **WARNING** : The violation of this instruction may cause serious injuries and even death.
⚠ **NOTES** : The violation of this instruction may cause light injuries or damage to the projector.

➟ After reading this manual, keep it in the place that the user always can contact easily.

Indoor Installation ⚠ WARNING

Stand the projector when you install.

If not, the power turns off.

Do not place the Projector in direct sunlight or near heat sources such as radiators, fires and stove etc.

This may cause a fire hazard !

Do not place inflammable materials beside the projector

This may cause a fire hazard !

Do not allow children to hang on the installed projector.

It may cause the projector to fall, causing injury or death.

Indoor Installation ⚠ NOTES

Disconnect the power and remove all connections before moving.

Do not place the projector close to sources of steam or oil such as a humidifier.

This may create a fire hazard or an electric shock hazard !

Do not place the projector where it might be exposed to excessive dust.

This may cause a fire hazard !

Only use the projector on a level and stable place.

It may become unstable and affect operation.

Ensure good ventilation around the projector. The distance between the projector and the ceiling or bottom should be more than 20cm/8 inches.

An excessive increase in its internal temperature may cause a fire hazard!

Do not block the vents of the projector or restrict air-flow in any way.

This would cause the internal temperature to increase and could cause a fire hazard!

Do not place the projector directly on a carpet, rug or place where ventilation is restricted.

This would cause its internal temperature to increase and might create a fire hazard !

The air flow from the projector inflow from the bottom left part and outflows to the top right. Therefore when installing a ventilator close, be careful not to change the direction of the air flow.

When installing the ventilator at the bottom part of the projector, it can cause a fire by raising the internal temperature.

Outdoor Installation ⚠ WARNING

Do not use the projector in a damp place such as a bathroom where it is likely to get wet.

This may cause a fire or an electric shock hazard !

Power ⚠ WARNING

Earth wire should be connected.

If the earth wire is not connected, there is a possible danger of electric shock caused by the current leakage.
If grounding methods are not possible, a separate circuit breaker should be employed and installed by a qualified electrician.
Do not connect ground to telephone wires, lightning rods or gas pipe.

The mains plug should be inserted fully into the power outlet to avoid a fire hazard !

This may cause a fire hazard !

Do not place heavy objects on the power cord

This may cause a fire or an electric shock hazard !

Power — ⚠ WARNING

Do not plug too many devices into one outlet.

It may result in overheating of the outlet and causes a fire hazard !

Power — ⚠ NOTES

Never touch the power plug with a wet hand

This may cause an electric shock hazard !

Hold the plug firmly when unplugging. If you pull the cord the cord may be damaged.

This may cause a fire hazard !

Prevent dust collecting on the power plug pins or outlet.

This may cause a fire hazard !

Do not plug in when the power cord or the plug is damaged or the connecting part of the power outlet is loose.

This may cause a fire or an electric shock hazard !

Ensure the power cord does not come into contact with sharp or hot objects such as a heater.

This may cause a fire or an electric shock hazard !

Place the projector where people will not trip or tread on the power lead.

This may cause a fire or an electric shock hazard !

Do not turn the projector On/Off by plugging-in or unplugging the power plug to the wall outlet.
(Do not use a switched power outlet to turn the unit on and off.)

It may cause mechanical failure or could give an electric shock.

Using — ⚠ WARNING

Do not place anything containing liquid on top of the projector such as flowerpot, cup, cosmetics or candle.

This may cause a fire hazard !

In case of impact shock or damage to the projector, switch it off and unplug it from the outlet. Contact a service center.

This may cause a fire or an electric shock hazard !

Do not allow any objects to fall into the projector.

This may cause an electric shock hazard !

If water is spilt into the projector, unplug it from the outlet immediately and consult a Service Agent.

This may cause an electric shock hazard !

Dispose of used batteries carefully and safely.

In the case of a battery being swallowed by a child please consult a doctor immediately.

In the event that an image does not appear on the screen, please switch the unit off and unplug it from power outlet. Contact a Service Agent.

This may cause a fire or an electric shock hazard !

Do not remove any covers (except lens cover). High risk of Electric Shock!

Don’t look directly onto the lens when the projector is in use. Eye damage may occur!

Do not touch metal parts during or soon after operation since the vents and lamp cover will remain very hot!

CAUTION concerning the Power Cord

Most appliances recommend they be placed upon a dedicated circuit; that is,a single outlet circuit which powers only that appliance and has no additional outlets or branch circuits.Check the specification page of this owner's manual to be certain.

Do not overload wall outlets. Overloaded wall outlets,loose or damaged wall outlets, extension cords, frayed power cords,or damaged or cracked wire insulation are dangerous.Any of these conditions could result in electric shock or fire. Periodically examine the cord of your appliance,and if its appearance indicates damage or deterioration, unplug it, discontinue use of the appliance, and have the cord replaced with an exact replacement part by an authorized services.

Protect the power cord from physical or mechanical abuse, such as being twisted, kinked, pinched, closed in a door, or walked upon. Pay particular attention to plugs, wall outlets, and the point where the cord exits the appliance.

Using ⚠ WARNING

Never touch the wall outlet when there is leakage of gas, open the windows and ventilate.

It can cause a fire or a burn by a spark.

Do not drop the projector or allow impact shock.

This may cause mechanical failure or personal injury !

Using ⚠ NOTES

Do not place heavy objects on top of projector.

This may cause mechanical failure or personal injury!

Take care not to cause impact to the lens particularly when moving the projector.

Do not touch the lens of the projector. It is delicate and easily damaged.

Do not use any sharp tools on the projector as this will damage the casing.

Cleaning ⚠ WARNING

Do not use water while cleaning the projector

This may cause damage to the projector or an electric shock hazard.

In the unlikely event of smoke or a strange smell from the projector, switch it off, unplug it from the wall outlet and contact your dealer or a service center.

This may cause a fire or an electric shock hazard !

Use an air spray or soft cloth that is moist with a neutral detergent and water for removing dust or stains on the projection lens.

Cleaning ⚠ NOTES

Contact a Service Center once a year to clean the internal parts of the projector.

Accumulated dust can cause mechanical failure.

When cleaning the plastic parts such as projector case, unplug the power and wipe it with a soft cloth. Do not use cleanser, spray water or wipe with a wet cloth. Especially, never use cleanser (glass cleaner), automobile or industrial shiner, abrasive or wax, benzene, alcohol etc., which can damage the product.

It can cause fire, electric shock or product damage (deformation, corrosion and damage).

Others ⚠ WARNING

Do not attempt to service the projector yourself. Contact your dealer or a service center.

This may cause damage to the projector and could give an electric Shock as well as invalidating the warranty !

Others ⚠ NOTES

Be sure to unplug if the projector is not to be used for a long period.

Accumulated dust may cause a fire hazard!

Refer to 38~39 page to replace the lamp.

Do not mix new batteries with old batteries.

This may cause the batteries to overheat and leak.

Only use the specified type of battery.

This could cause damage to the remote control.

Watch the projector screen keeping about 5 to 7 times the diagonal distance of the screen.

Watching the screen too close can reduce your eyesight.

ENGLISH

Part Descriptions

Main Body

* The projector is manufactured using high-precision technology. You may, however, see on the Projector screen tiny black points and/or bright points (red, blue, or green). This can be a normal result of the manufacturing process and does not always indicate a malfunction.

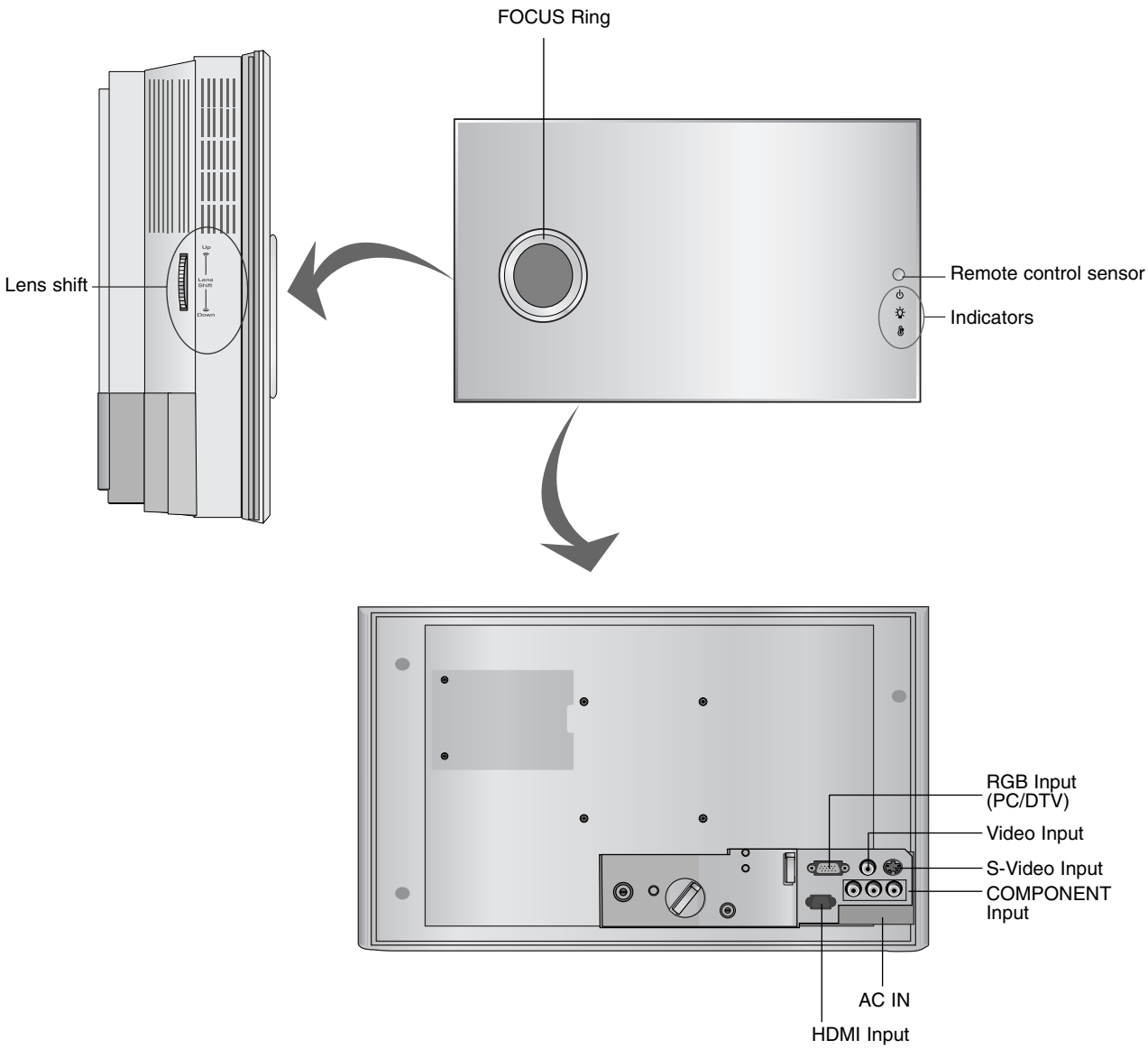

Control Panel

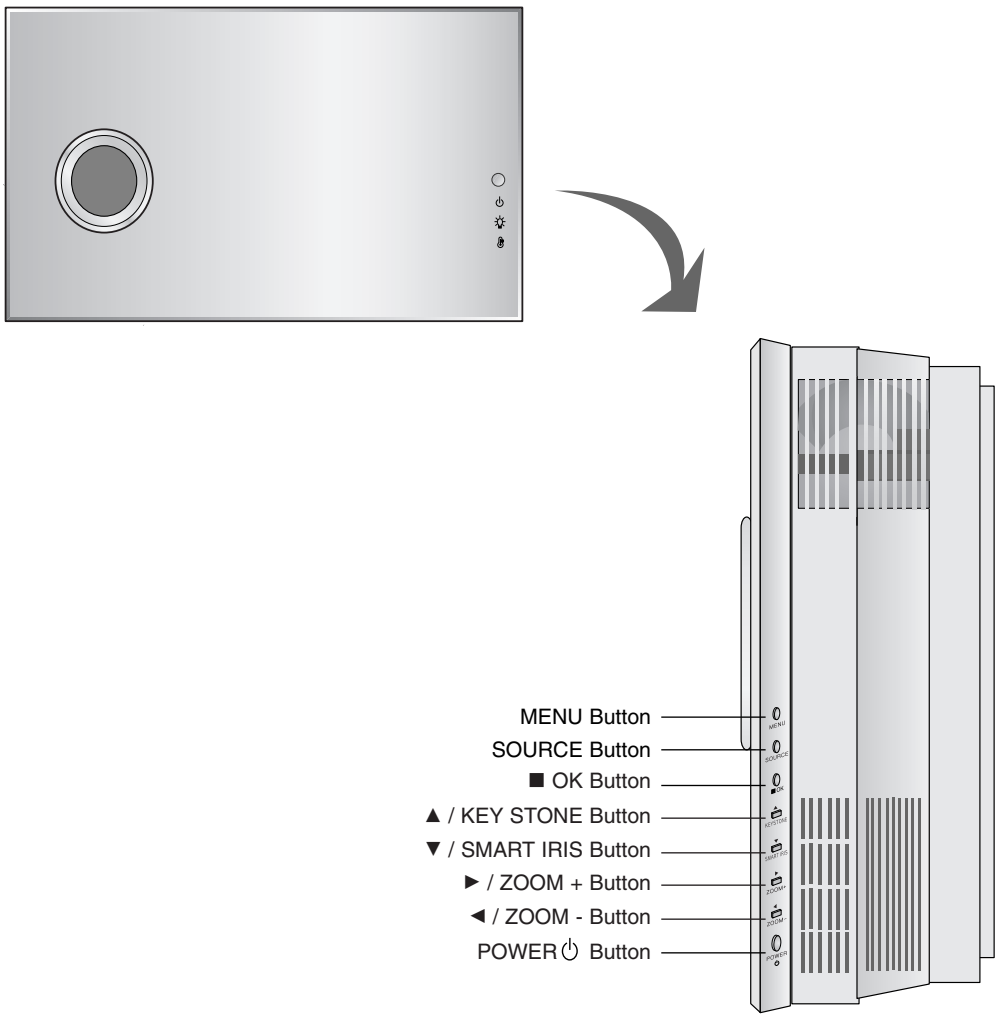

Remote Control

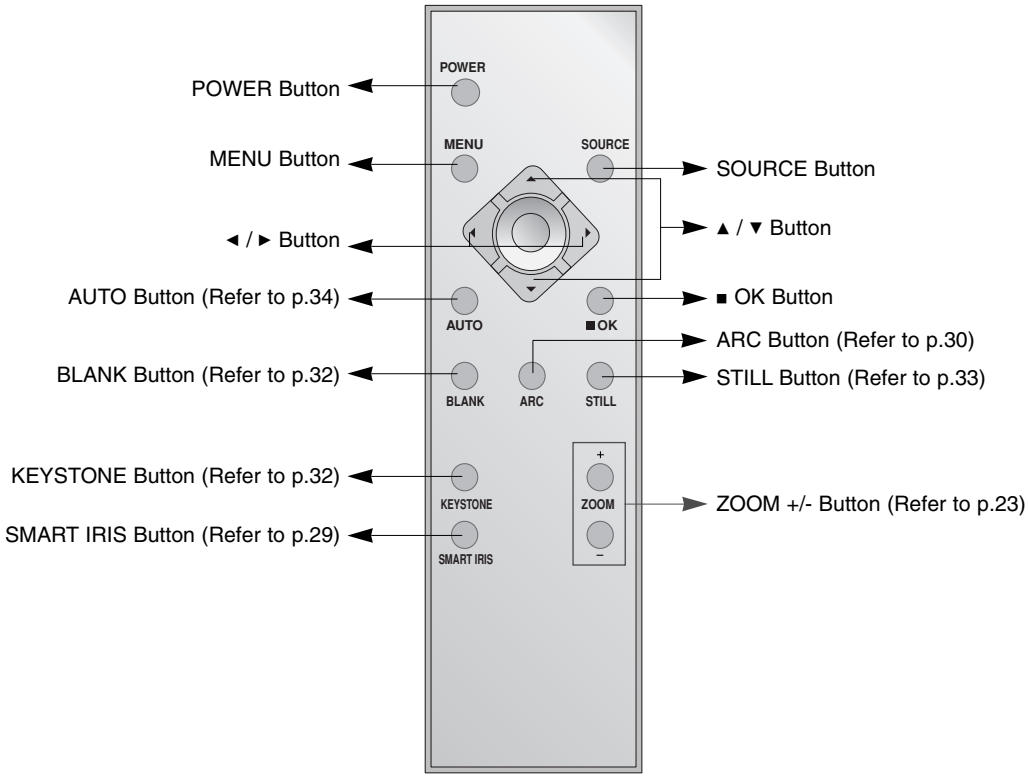

Installing Batteries

CAUTION
RISK OF EXPLOSION IF BATTERY IS REPLACED BY AN INCORRECT TYPE.
DISPOSE OF USED BATTERIES ACCORDING TO THE INSTRUCTIONS.

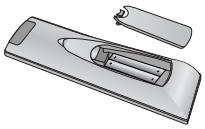

- Open the battery compartment cover on the back of the remote control and insert the batteries with correct polarity, match “+” with “+”, and match “-” with “-”.
- Install two 1.5V batteries.
  Don’t mix used batteries with new batteries.

Projector Status Indicators

* Lamp Indicator, operation indicator and temperature indicator on the projector show the user the operating status of the projector.

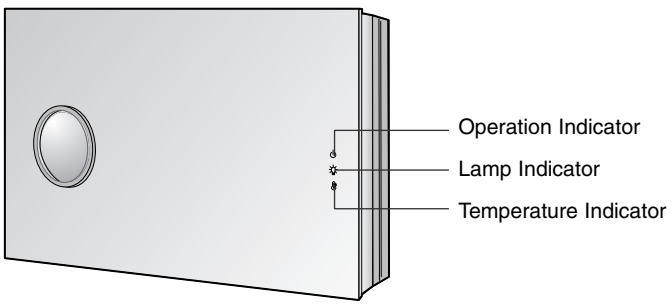

Operation Indicator	Orange	Standby.
	Green(flashing)	Lamp cooling until the lamp turn on.
	Green	On operation. (Turn on the lamp)
	Orange(flashing)	Projector lamp is cooling as power out (2 minutes)
	Off	Power off.
Lamp Indicator	Red	Projector lamp is reaching the end of its life and needs to be replaced with a new lamp. (over 2000 hours) The OSD, “Replace the lamp” is displayed 5 seconds from the first power on.
	Red(flashing)	The projector has trouble in the lamp or around it at power-on. Retry Power On again later. If lamp indicator is red (flashing) again, contact a service center.
	Green(flashing)	The lamp cover is not closed.
Temperature Indicator	Orange	This projector is in high temperature. Turn the power of projector off and check the ventilator.
	Red	The projector is turned off as its high temperature.
	Red (flashing)	Power has turned off due to problem with the internal cooling fan. Contact a service center.

Accessories

Remote Control

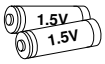

2 Batteries

Power Cord

Video Cable

Computer Cable

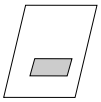

Owner's manual

CD ROM

Wall mounting bracket

* Bolt and anchor are included in the wall bracket.

Optional Extras

* Contact your dealer to purchase these items.
* Contact your service personnel for replacing a new lamp.
* Projector lamp is reaching the end of its life and needs to be replaced with a new lamp.
* Various separately sold accessories can change to improve the quality of the product or new products can be added.

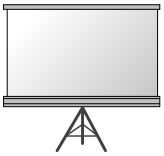

Projection Screen

Lamp

Desktop Stand

SCART to RCA jack (option)

S-Video Cable

HDMI Cable

Component Cable

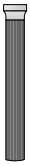

Cable Cover

* Bolt and anchor are included in the wall bracket.

Installation and Composition

Installation Instructions

* Don't place the projector in the following conditions. It may cause malfunction or product damage.

Provide proper ventilation for this projector.

- The projector is equipped with ventilation holes(intake) on the bottom and ventilation holes(exhaust) on the front. do not block or place anything near these holes, or internal heat build-up may occur, causing picture degradation or damage to the projector.

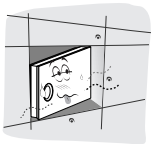

- Never insert materials as paper into the lower of the projector.

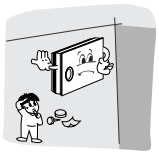

- Ensure good ventilation around the projector.
  The distance between the projector and the ceiling or bottom should be more than 20cm/8 inches.

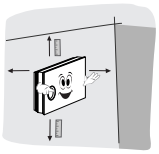

- For proper ventilation, allow a clearance of 1cm on each side and from the wall.

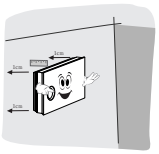

Place this projector in adequate temperature and humidity conditions.

- Install this projector only in a location where adequate temperature and humidity is available. (refer p.43)

Don't place the projector where it can be covered with dust.

- This may cause overheating of the projector.

The projector is manufactured using high-precision technology. You may, however, see tiny black points and/or bright points (red, blue, or green) that continuously appear on the projector Screen. This is a normal result of the manufacturing process and does not indicate a malfunction.

To display DTV programs, it is necessary to connect a DTV receiver (Set-top Box) and connect it to the projector.

If there is no input signal, the Menu will not be displayed on screen.

Basic Operation of the Projector

1. Place the projector on a wall.
2. Place the projector the correct distance from the screen. The distance between the projector and the screen determines the actual size of the image.
3. Position the projector so that the lens is set at a right angle to the screen. If the projector is not set at a right angle, the screen image will be crooked. If this is so then the keystone adjustment may correct this (Refer to page 32.)
4. Connect the cables of the projector to a wall power socket and other connected sources.

projection distance based on the picture format

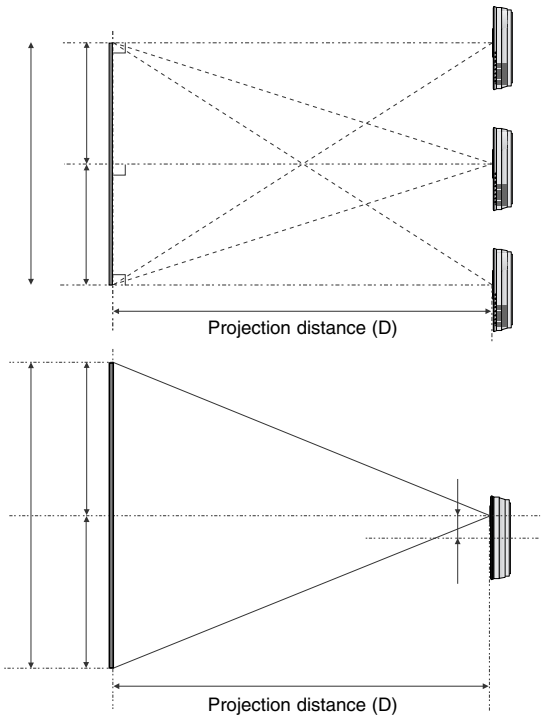

16:9 picture format					mm / inches
screen				Projection distance	
screen size (inches)	screen size (mm)	screen horizontal size (mm)	screen vertical size (mm)	The shortest distance (mm)	The longest distance (mm)
40	1016	886	498	1532	2144
50	1270	1107	623	1921	2688
60	1524	1328	747	2311	3233
70	1778	1550	872	2700	3777
80	2032	1771	996	3069	4322
90	2286	1992	1121	3478	4866
100	2540	2214	1245	3867	5411
120	3048	2657	1494	4645	6500
140	3556	3099	1743	5424	7589
160	4064	3542	1992	6202	8678
180	4572	3985	2241	6980	9767
200	5080	4428	2491	7759	10656
220	5588	4870	2740	8537	11945
240	6036	5313	2989	9315	13064
260	6604	5756	3238	10093	14123
280	7112	6199	3487	10372	15212
300	7620	6641	3736	11650	16300

* The longest/shortest distance show status when adjusted by the zoom function.

Installing the projector to the wall

Safety instructions on installing the wall

Please take note of the safety instructions to prevent any potential accident or misuse of the projector.

➟ Safety Instructions are given in two forms as detailed below.

⚠ **WARNING** : The violation of this instruction may cause serious injuries and even death.

⚠ **NOTES** : The violation of this instruction may cause light injuries or damage to the projector.

➟ After reading this manual, keep it in the place that the user always can contact easily.

⚠ WARNING

Do not install this product on the place where it cannot be supported.

It may cause the product to fall and could cause injuries.

Do not hang on or impact this product.

It may cause the product to fall and could cause injuries.

⚠ NOTES

Follow the instructions when installing this product.

Otherwise it may cause serious injuries or damage of the product.

Do not install this product by yourself. Get some help from others.

It may cause the product to fall and could cause injuries.

Before installing, check whether the material of wall satisfies the specifications and make sure to use enclosed anchors supplied with the product.

Otherwise it may cause safety problem.

When drilling use drill and drill bit specified by the manufacturer. And the depth of the hole should satisfy the specifications.

Otherwise it may cause safety problem.

Do not place a heat source (radiator or heater) or a humidifier under the installed product.

It may cause a fire or could give an electric shock.

Do not install this product near a sprinkler, a sensor, a high voltage electric line, any power source or the place where impact or vibration can affect.

Unplug the product before installing.

Otherwise it may cause a fire or could give an electric shock.

Do not install this product barehanded.

It may cause injuries.

Accessories for wall mounting bracket

Wall mounting bracket | Bolts for wall mounting bracket | Wall anchor bolt sleeves | Bolts for fixing the bracket | Fixing fixers | Bolts for using the wood

Installing Wall mounting bracket

1 Detach the products

- Detach bolt from wall mounting bracket.
- Detach product fixing bracket from Wall mounting bracket.

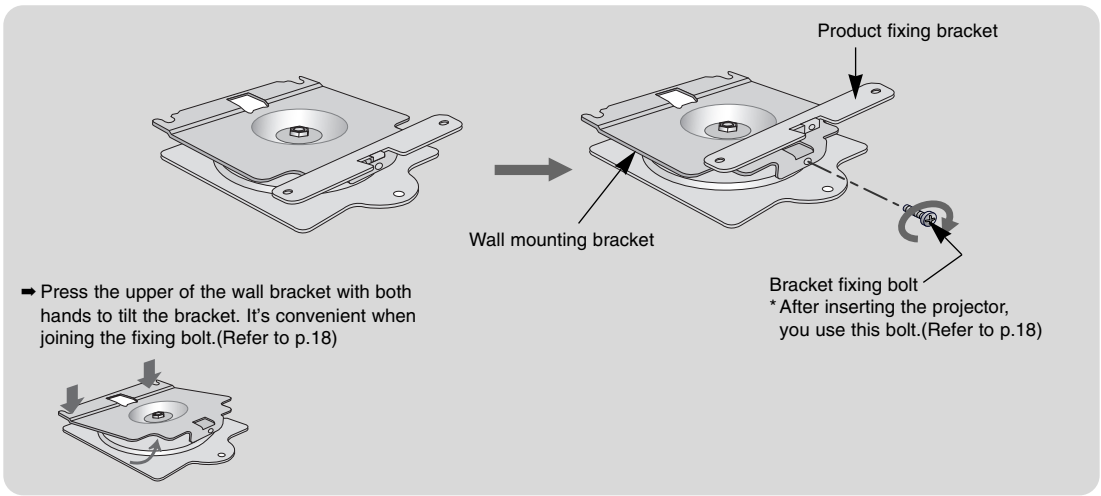

2 Assemble projector with the product fixing bracket

a. Carefully place the lens side down on a cushioned surface that will protect the lens from damage.

b. Insert the 2 fixing fixers on the top of the projector.(It's top that the point of auto ventilation door.)

c. Insert the product brackets detached in the fig.1 on the projector with bracket fixing bolts.

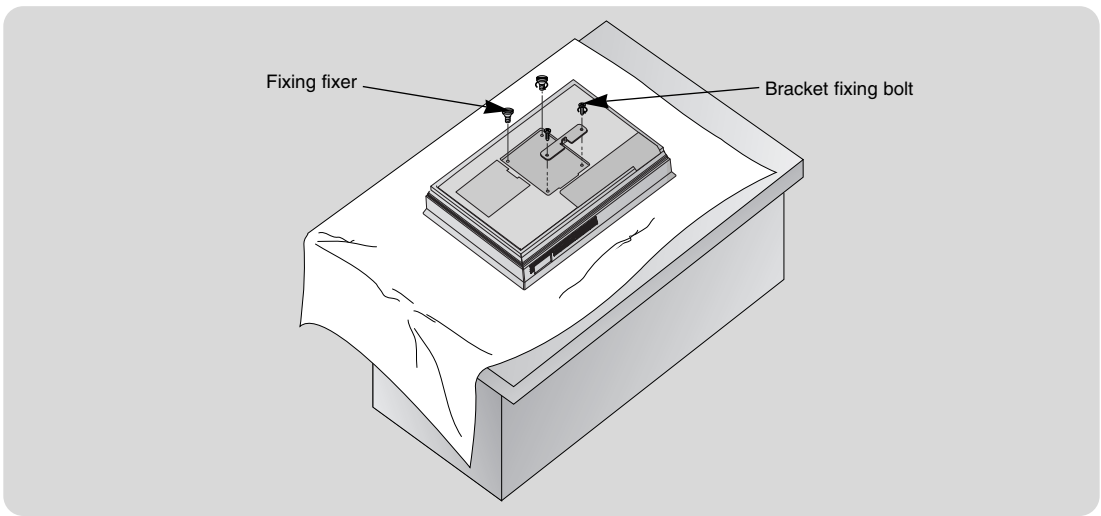

3 Insert anchors or bolts for using the wood after marking the positions where products are mounted on the wall

- Check the surface or thickness that the wall mounting bracket.
- When the surface that the wall mounting bracket is concrete, strong , weak natural rock, brick and hollow block, you can use the supplied anchors or bolts.
- Only thickness of strike off material is less than 20mm, you can use the supplied anchors or bolts.
- Only making wood into wall, you can use the supplied bolts for using the wood.
- Plasterboard is not a sufficiently strong enough material.

Using the wall anchor bolt sleeves and bolts for wall mounting bracket

a. After matching the positions of the wall bracket, mark the positions of the anchor.

b. At the position of anchor marked in the wall, using on 6mm drill appropriate for the material on the wall, drill each hole to a depth of above 40~50mm.

c. Clean each drilled hole and insert an anchor supplied with the wall mounting bracket into each hole.

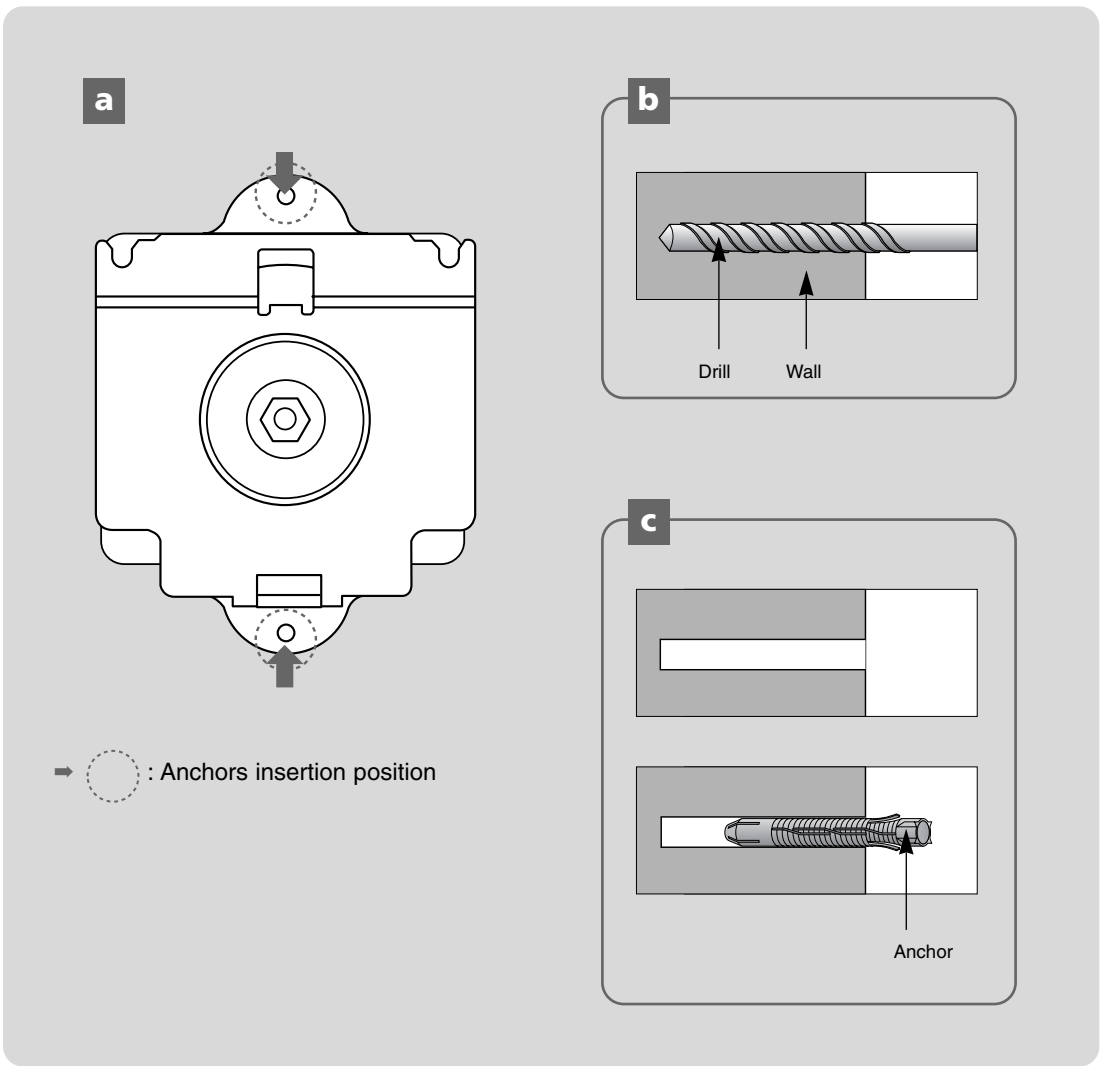

4 Install the wall mounting bracket on the wall

Using the wall anchor bolt sleeves and bolts for wall mounting bracket

a. Mount the wall mounting bracket on the wall as setting the hole.

b. Insert the bolts for wall mounting bracket as setting the each hole.

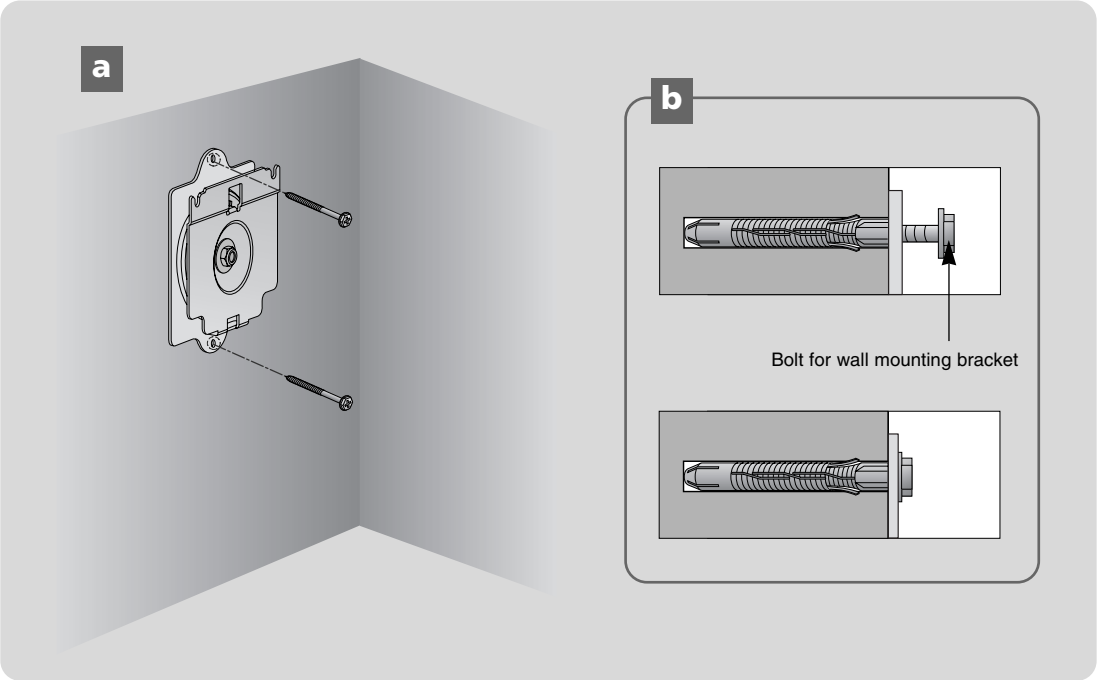

Using the bolts for using the wood

● Only making wood into wall, you can use.

- After matching the position of the wall, mount the wall mounting bracket using the bolts for using the wood supplied.

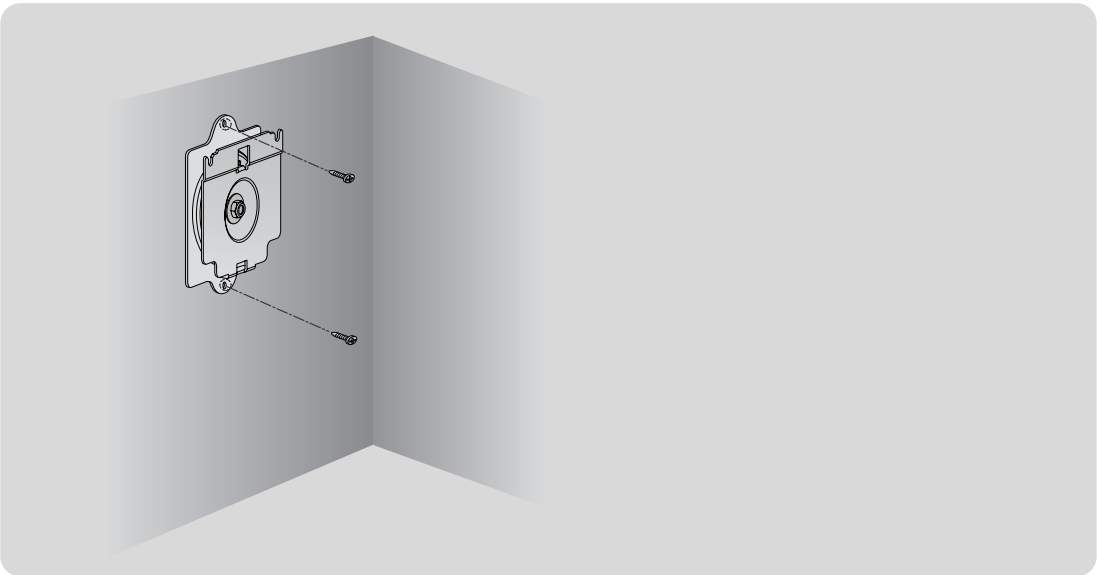

5 Assemble the projector with the wall mounting bracket

- Assemble a projector with the wall mounting bracket installed on the wall as below Fig. Do not install this product by yourself. Get some help from others. It may cause the product to fall and could cause injuries.

a. Hang fixing 2 fixers on a upper groove.

b. Insert the product bracket to the groove of the lower wall mounting bracket.

c. After assembling and fixing the projector, insert the bolts for fixing bracket to the hole.

d. Entirely check the projector fixed as pulling the lower projector.

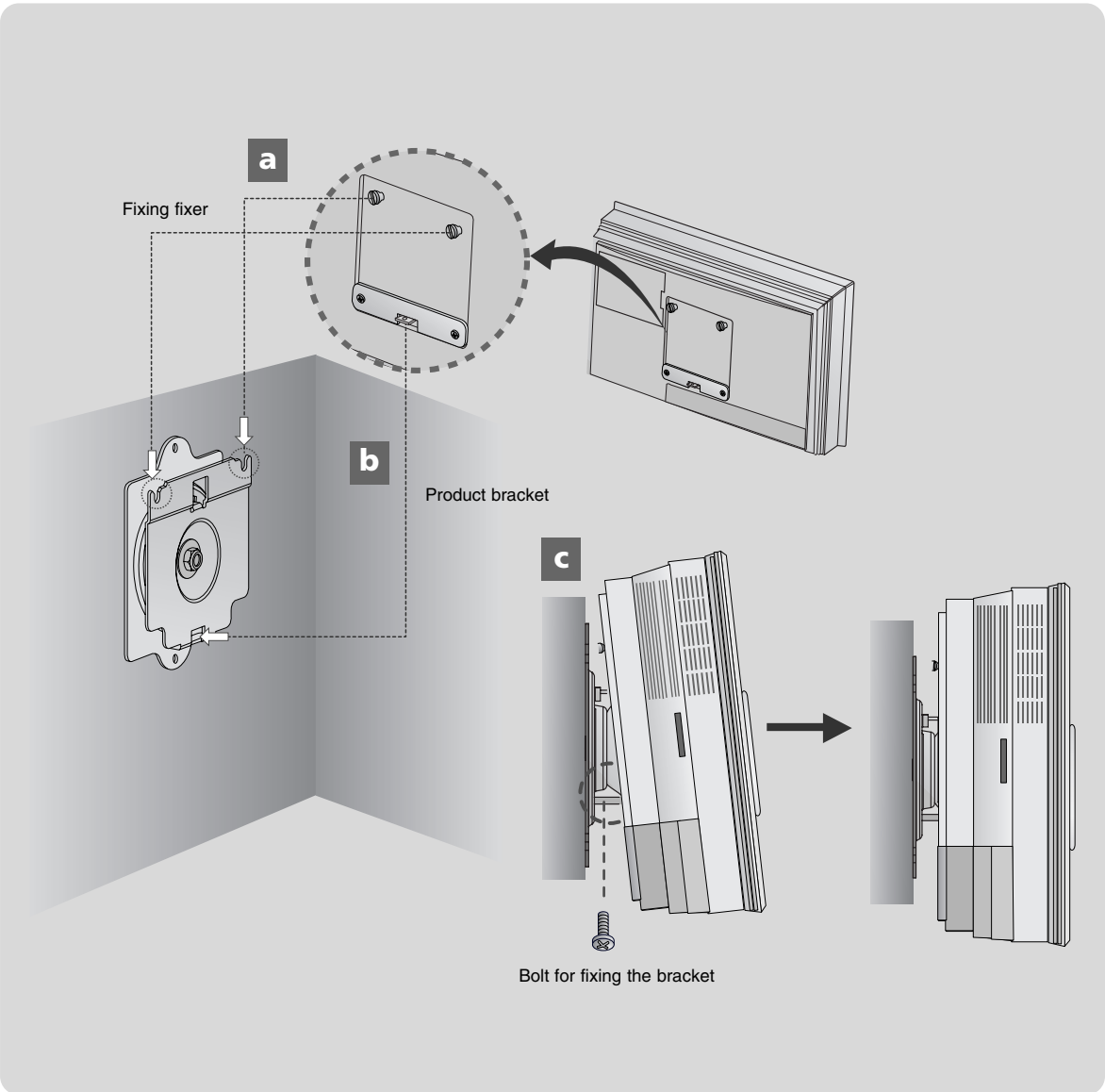

Cable Management

1 Place the set with the screen facing down on a cushion or soft cloth.
Pull the back cover upward.

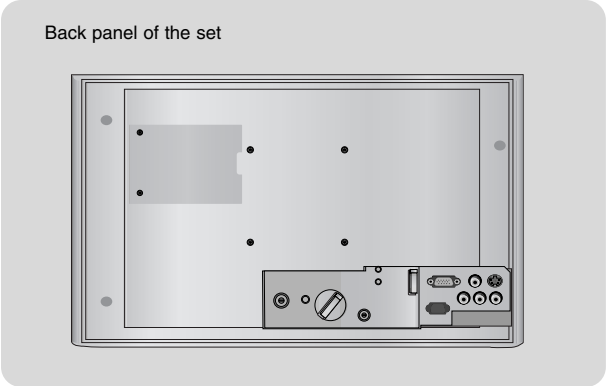

2 Connect the cables as necessary.

At first, Bundle the HDMI, VIDEO, S-VIDEO Cables using the supplied Cable holder as shown.

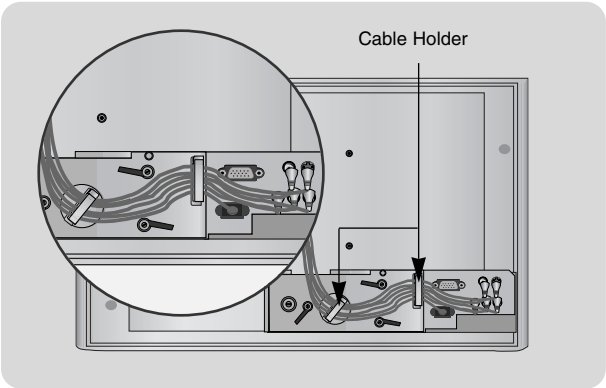

HDMI cable should be placed on the bottom.

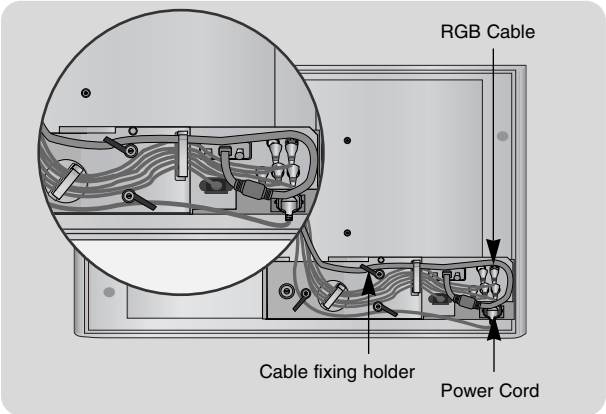

3 Reinsall the back cover correctly and fix it using the thumb bolt.

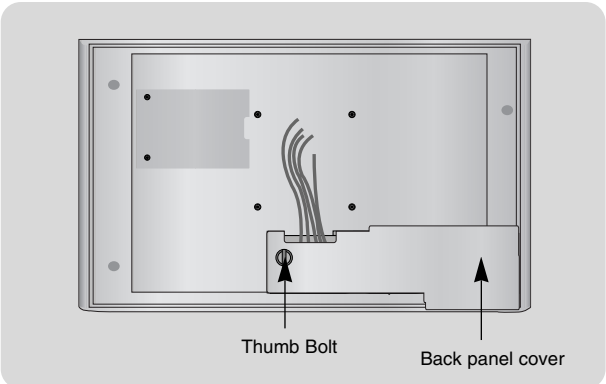

4 Separate HDMI Cable and Power Code from others and then bind the cables as shown.

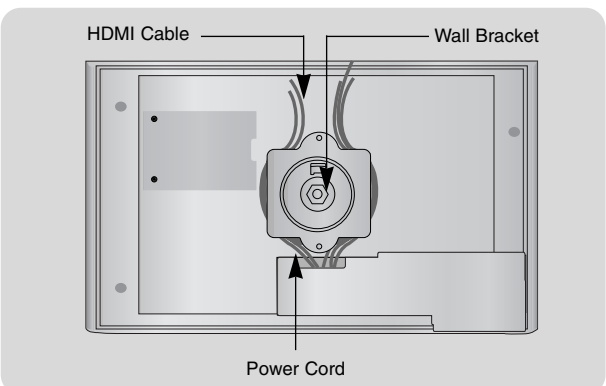

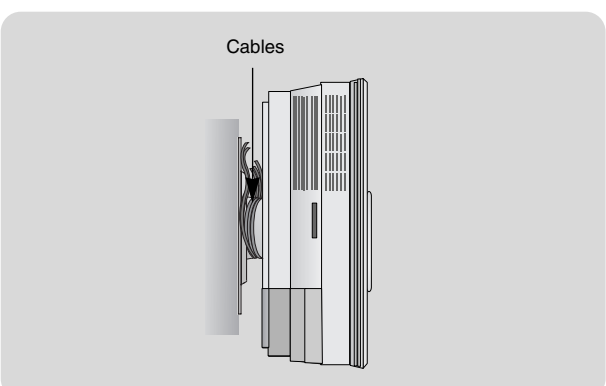

Adjusting Tilt Angle

- Adjustable angle range is 5°(upside/downside/left/right) and turn range is ±10.
- Do not adjust tilt angle with too much force. It may cause damage of product or could cause injuries.

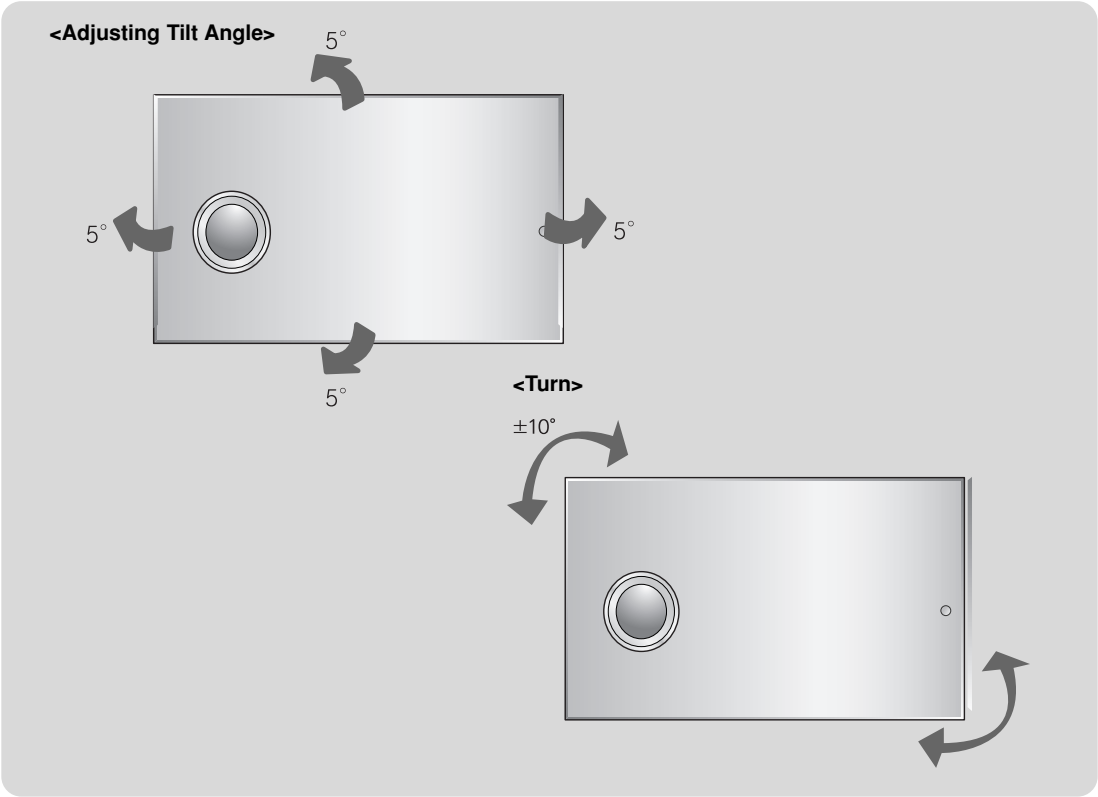

Adequate installation space from the wall

- Leave 16.8 mm between the projector and the wall when installing the wall bracket on the wall.

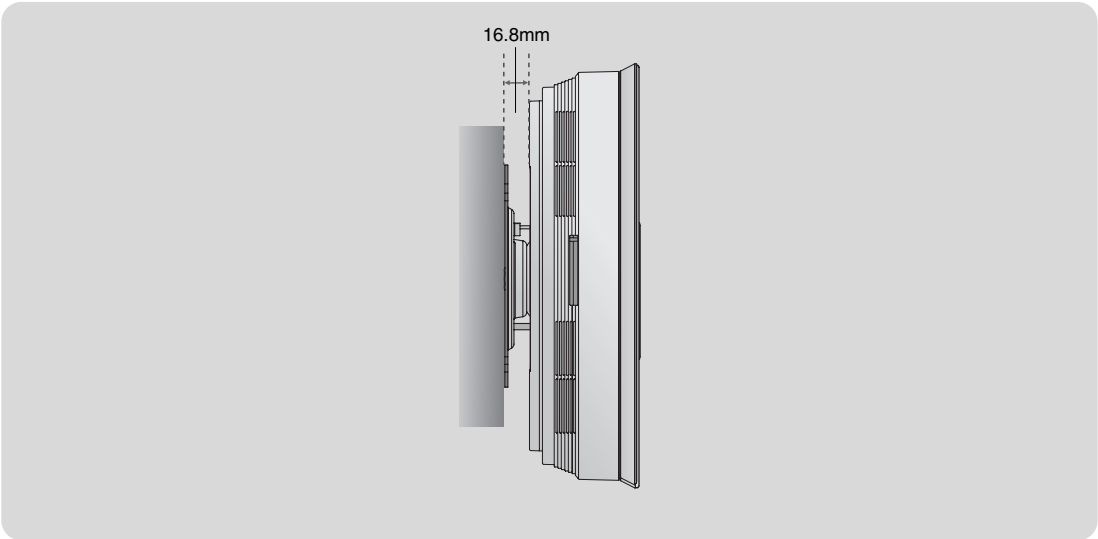

Turning on the Projector

1. Connect power cord correctly.
2. Press the **POWER** button on the remote control or control panel.
   (Green operation indicator flashes during cooling of the lamp.)
   - An image will appear after the operation indicator light turns (Green).
   - Select the source mode with the SOURCE button.

Note!

* Don't unplug the power cord while the ventilation fan (inlet/outlet) is working. If so, you take longer time by lamp on.

Turning off the Projector

1. Press the **POWER** button on the control panel or remote control.

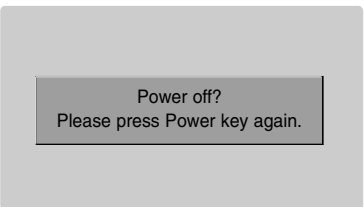

2. Press the **POWER** button on the control panel or remote control again to cut off the power.
3. If the operation indicator LED is orange and blinking, do not disconnect the mains supply until the operation indicator LED is lit up constantly (orange).
   - If the operation indicator LED is orange and blinking, the power button on the control panel or on the remote control will not operate.

Selecting source mode

1. Press the **SOURCE** button.

2. Each press of the ◄, ► button changes the display as below.

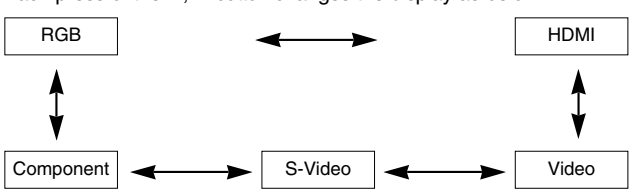

Focus, Zoom, Position of the Screen Image

When an image appears on the screen, check if it is in focus and fits the screen.

- Adjust the focus by using **FOCUS** ring of the set.

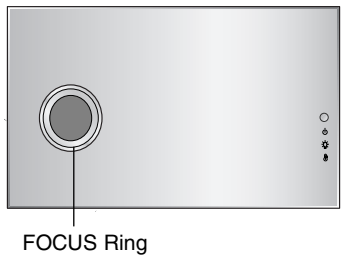

- Adjust the screen size by using **ZOOM+/-** button of the remote control or the control panel.

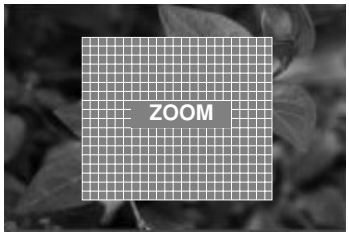

If you want to adjust the screen image to upside/downside, adjust the lens shift as shown below.

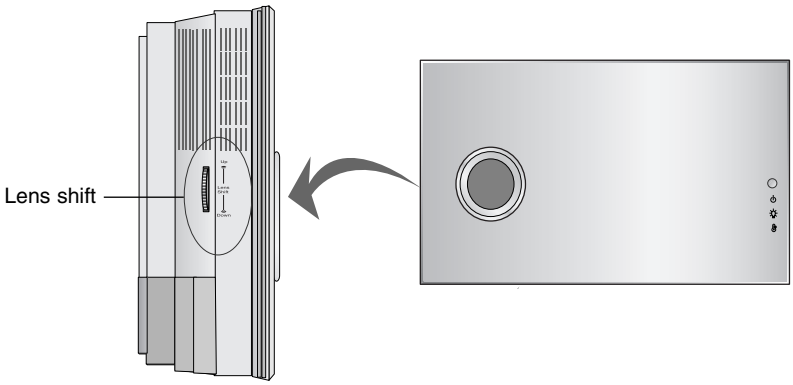

- Adjust the Lens shift to upside/downside the set the wanted position of screen.

Connection

Connecting to a Desktop PC

* You can connect the projector to a computer of VGA, SVGA, XGA and SXGA output.
* Refer to page 36 for the supported monitor displays of the projector.

< How to connect >

Connect computer cable to **RGB IN (PC/DTV)** of the projector.
* You can get better picture quality when connecting HDMI source to the projector.

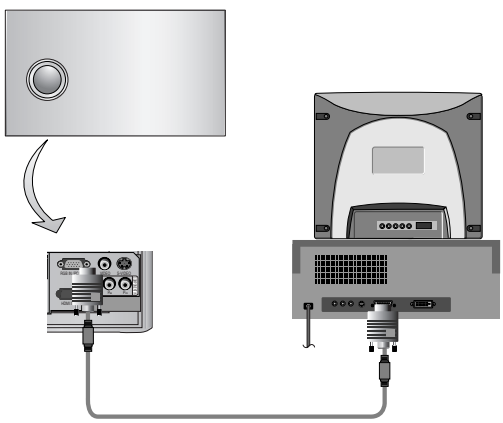

Connecting to a Notebook PC

< How to connect >

Connect computer cable to **RGB IN (PC/DTV)** of the projector.
* If you set your computer to output the signal to both the display of your computer and the external projector, the picture of the external projector may not appear properly. In such cases, set the output mode of your computer to output the signal only to the external projector. For details, refer to the operating instructions supplied with your computer.

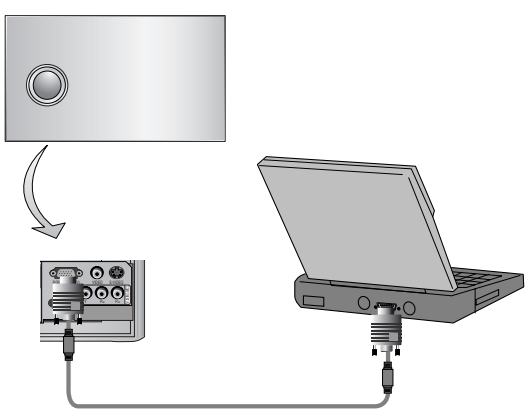

ENGLISH

Connecting to a Video Source

* You can connect a VTR, a camcorder or any other compatible video image source to the projector.

< How to connect 1 >

a. Connect the Video input jacks of the projector to the output jacks of the A/V source with Video cable.

< How to connect 2 >

b. Connect the S-Video input jack of the projector to the S-Video output jack of an A/V source with an S-Video cable.
   * You can get better picture quality when connecting S-Video source to the projector.

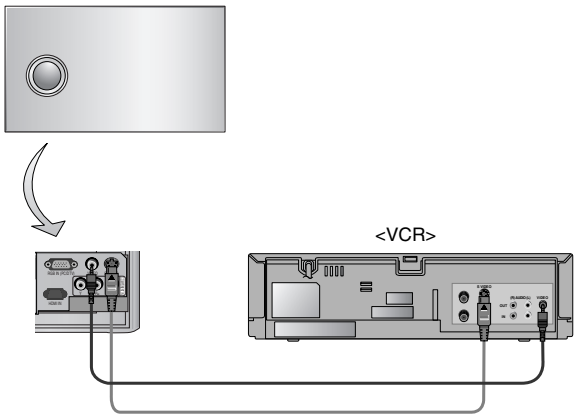

Connecting to a DVD

* The output jacks (Y, PB, PR) of the DVD might be labeled as Y, Pb, Pr / Y, B-Y, R-Y / Y, Cb, Cr according to the equipment.

< How to connect >

a. Connect the DVD Component cable to **Component Pr, Pb, Y** of the projector.
   * When connecting the component cable, match the jack colors with the component cable.(Y=green, PB=blue, PR=red)

b. You can select HDMI Mode if DVD player has HDMI output.

Signal	Component	RGB/DTV	HDMI/DVI
480i	O	X	X
480p	O	O	O
720p	O	O	O
1080i	O	O	O
576i	O	X	X
576p	O	O	O

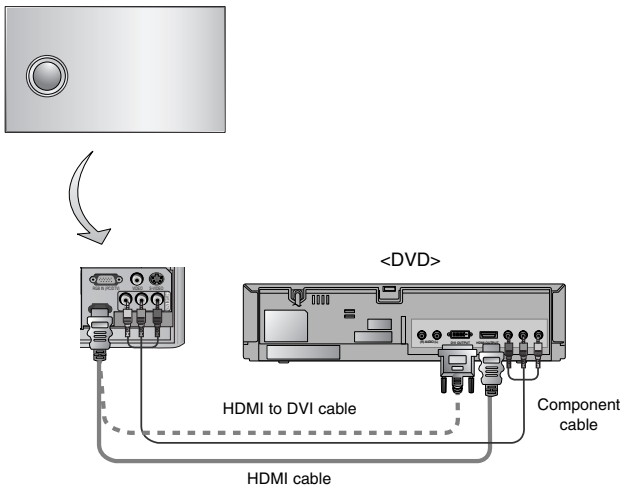

Connecting to a D-TV Set-Top Box

*** To receive D-TV programmes, it is necessary to purchase a D-TV receiver (Set-Top Box) and connect it to the projector.**
*** Please refer to the owner's manual of the D-TV Set-Top Box for the connection between projector and D-TV Set-Top Box.**

< How to connect an RGB source >

a. Connect RGB cable to **RGB IN (PC/DTV)** of the projector.

b. Use a DTV receiver with DTV 480p(576p)/720p/1080i mode.
   * HDMI supports HDCP.

< How to connect a HDMI source >

a. Connect the D-TV Set-Top Box HDMI cable to **HDMI** of the projector.

b. Use a DTV receiver with DTV 480p(576p)/720p/1080i mode.

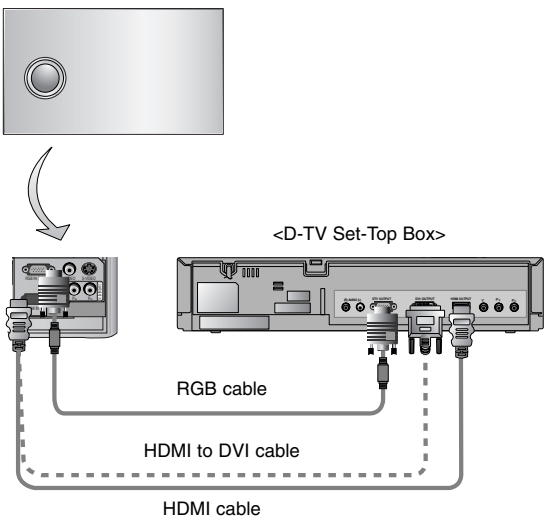

< How to connect a Component source >

a. Connect the D-TV Set-Top Box Component cable to **Component P_R, P_B, Y** of the projector.
   * When connecting the component cable, match the jack colors with the component cable.(Y=green, P_B=blue, P_R=red)

b. Use a DTV receiver with DTV 480p(576p)/720p/1080i mode.

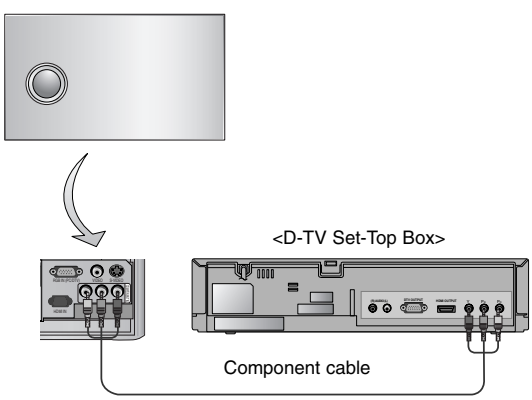

ENGLISH

Function

*** In this manual, the OSD(On Screen Display) may be different from your Projector's because it is just an example to help with the Projector operation.**
* If there is no input signal present, the Menu will not be displayed.
* This operating guide explains operation of RGB(PC) mode mainly.

Video Menu Options

Adjusting Video

1. Press the **MENU** button and then use ◄, ► button to select the ■ menu.

2. Press the ▲, ▼ button to select a video item you want to adjust.

3. Press the ◄, ► button to adjust the screen condition as you want.

- Each adjustment of ■ menu options will not affect other inputs.
  As required, re-adjust ■ menu options for the following input source :
  Video/S-Video/Component (480i(576i)), Component (480p(576p), 720p, 1080i)
- To restore the original image condition after changing it, press ■**OK** button after selecting [**Reset**] item.
- When receiving an NTSC signal, the picture item **Tint** is displayed and can be adjusted.(60Hz only)
- To exit the menu display, repeatedly, press the **MENU** button.

< RGB mode >

< Video mode >

< HDMI mode >

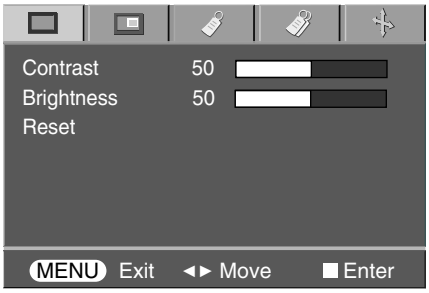

APC (Auto Picture Control)

* Use APC to set the projector for the best picture appearance.
* This function will not work in RGB mode.

1. Press the **MENU** button and then use ◄, ► button to select the ■ menu.

2. Press the ▲, ▼ button to select **APC** item.

3. Press the ◄, ► button to adjust the screen condition as you want.

- Each press of the ▲, ▼ button changes the screen as shown below.

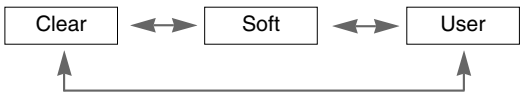

- To exit the menu display, repeatedly, press the **MENU** button.

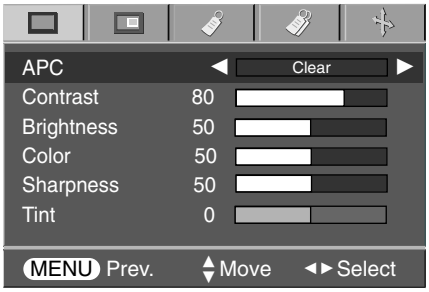

Auto Color Temperature Control

- To initialize values (reset to default settings), select the **Normal** option.

1. Press the **MENU** button and then use ◄, ► button to select the menu.
2. Press the ▲, ▼ button to select **ACC** item.
3. Press the ◄, ► button to make desired adjustments.
   - Each press of the ▲, ▼ button changes the screen as shown below.

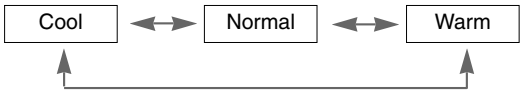

   - To exit the menu display, repeatedly, press the **MENU** button.

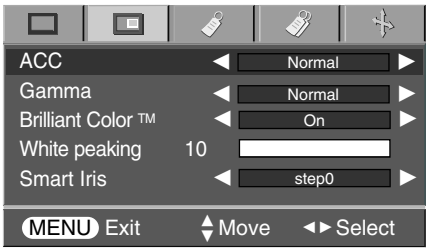

Gamma Function

1. Press the **MENU** button and then use ◄, ► button to select the menu.
2. Press the ▲, ▼ button to select **Gamma** item.
3. Press the ◄, ► button to adjust the screen condition as required.
   - Each press of the ▲, ▼ button changes the screen as shown below.

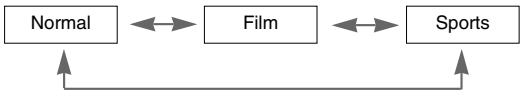

   - To exit the menu display, repeatedly, press the **MENU** button.

Brilliant Color ™ Function

1. Press the **MENU** button and then use ◄, ► button to select the menu.
2. Press the ▲, ▼ button to select **Brilliant Color ™** item.
3. Press the ◄, ► button to select **On** or **Off**.

*** What does Brilliant Color ™ do?**
This function either increases or decreases entire luminosity by enriching the impression of a halftone color.

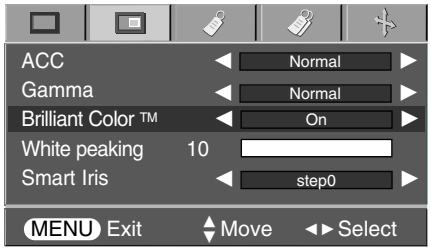

ENGLISH

White peaking Function

1. Press the **MENU** button and then use ◄, ► button to select the menu.
2. Press the ▲, ▼ button to select **White peaking** item.
3. Press the ◄, ► button to adjust the screen condition as you want.
   - Adjust to higher setting to achieve brighter picture. Adjust to lower setting for darker picture.
   - To exit the menu display, repeatedly, press the **MENU** button.
   - You can adjust **White peaking** only when **Brilliant Color ™** is On.

Black Level Function

- You can adjust **Black Level** only in HDMI mode.

1. Press the **MENU** button and then use ◄, ► button to select the menu.
2. Press the ▲, ▼ button to select **Black Level** item.
3. Press the ◄, ► button to select **Low** or **High**.
   - **Low** : The reflection of the screen gets darker.
   - **High** : The reflection of the screen gets brighter.

< HDMI mode >

Smart Iris Function

1. Press the **MENU** button and then use ◄, ► button to select the menu.
2. Press the ▲, ▼ button to select **Smart Iris** item.
3. Press the ◄, ► button to adjust the contrast as required.
   - Each press of the ▲, ▼ button changes the screen as shown below.

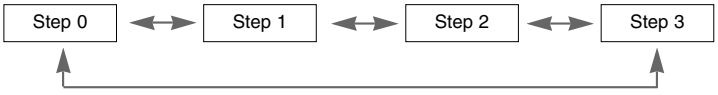

   - To exit the menu display, repeatedly, press the **MENU** button.
   - The contrast will be increased to the Step 0.

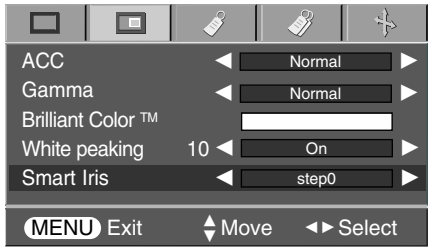

Special Menu Options

Selecting Language

1. Press the **MENU** button and then use ◄, ► button to select the menu.
2. Press the ▲, ▼ button to select **Language** item.
3. Press the ◄, ► button to select the language you want to use.
   - On-Screen-Display (OSD) is displayed in the selected language.
   - To exit the menu display, repeatedly, press the **MENU** button.

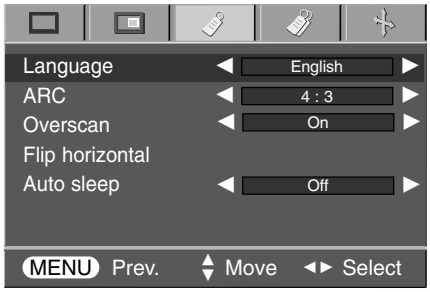

Using ARC Function

1. Press the **ARC** button.
   Each press of the button changes the display as below.

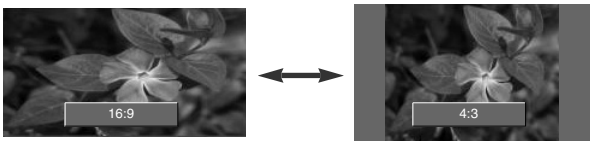

16:9 4 : 3

Note!

You can also use this function by using the **MENU** button.

Overscan Function

1. Press the **MENU** button and then use ◄, ► button to select the menu.
2. Press the ▲, ▼ button to select **Overscan** item.
3. Press the ◄, ► button to select **On** or **Off**.

- You can adjust **Overscan** only in RGB-DTV, HDMI-DTV and Component mode.

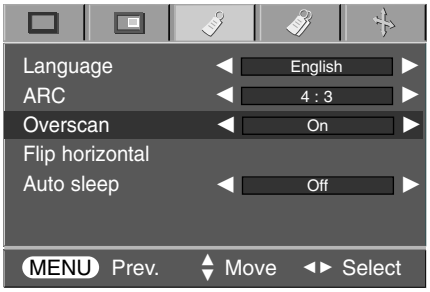

Flip horizontal Function

* This function reverses the projected image horizontally.
  Use this function when rear projecting an image.

1. Press the **MENU** button and then use ◄, ► button to select the menu.
2. Press the ▲, ▼ button to select **Flip horizontal** item.
3. Press the ■**OK** button to see reversed image.

- Each time you press the ■**OK** button, the image will be reversed.
- To exit the menu display, repeatedly, press the **MENU** button.

Auto sleep Function

* The sleep timer turns the projector off at the preset time.

1. Press the **MENU** button and then use ◄, ► button to select the menu.
2. Press the ▲, ▼ button to select **Auto sleep** item.
3. Press the ◄, ► button to select the desired preset time.

- To exit the menu display, repeatedly, press the **MENU** button.

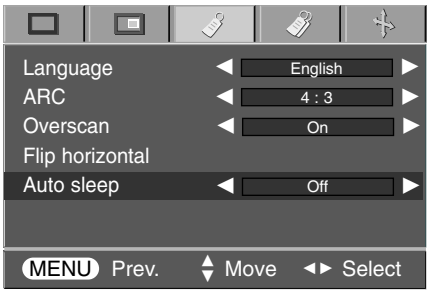

Special Menu Options

Using Keystone Function

* Use this function when the screen is not at a right angle to the projector and the image is a trapezoid shape.
* Only use the **Keystone** function when you can't get the best angle of projection.

1. Press the **KEYSTONE** button.
2. Press the ▲, ▼ button to select **V Keystone** or **H Keystone.**
3. Press the ◄, ► button to make desired adjustments.
   - **Keystone** can be adjusted from -20 to +20.
   - You can also access this function via the **MENU** button.

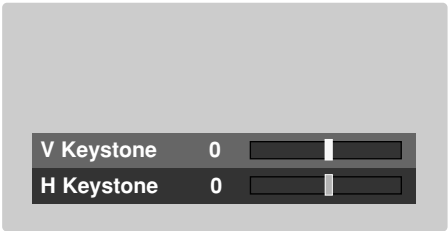

Using Blank Function

* This function may be effective if you need to get the attention of the audience during presentations, meetings or briefings.

1. Press the **BLANK** button.
   - The screen turns off to a background color.
   - You can choose the background color.
     (Refer to '**Selecting blank image color**')
2. Press any button to cancel the blank function.

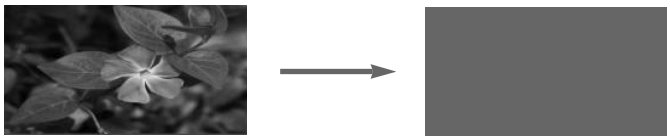

Selecting Blank image color

1. Press the **MENU** button and then use ◄, ► button to select the menu.
2. Press the ▲, ▼ button to select **Blank image** item.
3. Press the ◄, ► button to select the color you want to use.
   - Background color will be altered to the selected Blank function color.
   - To exit the menu display, repeatedly, press the **MENU** button.

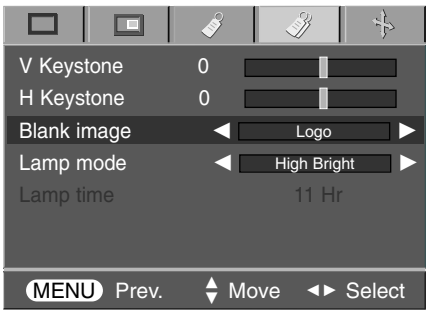

Lamp mode Function

1. Press the **MENU** button and then use ◄, ► button to select the menu.
2. Press the ▲, ▼ button to select **Lamp mode** item.
3. Press the ◄, ► button to select **High Bright** or **Economic**.
   - To exit the menu display, repeatedly, press the **MENU** button.

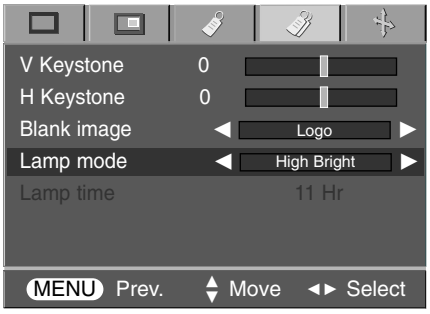

Checking Lamp time

1. Press the **MENU** button and then use ◄, ► button to select the menu.
2. The used lamp time is displayed.
   - When projector lamp is reaching the end of its life (approximately 2000 hours), the lamp indicator will turn red.
   - The lamp warning LED illuminates red continuously in the case of excessive lamp time.
   - To exit the menu display, repeatedly, press the **MENU** button.

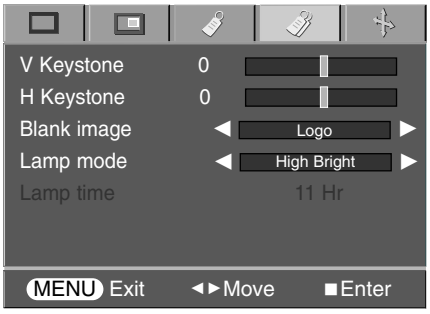

Using Still Function

1. Press the **STILL** button.

   * You can freeze the input image.

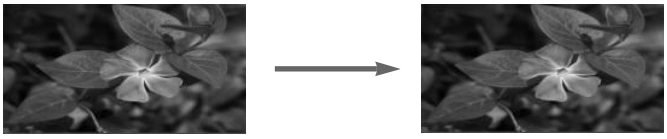

<Moving Image> <Still Image>

2. To exit STILL, press any button .
   * The STILL function will release automatically after approximately 10 minutes.

Screen Menu Options

Auto Configure Function

* This function assures you of getting the best video quality by automatically adjusting the horizontal size and synchronization of the image.
* Auto Tracking function works in RGB PC input only.

1. Press the **AUTO** button.
   - Image positioning and synchronization are automatically adjusted.

2. You want adjust more by various PC input modes, adjust **Phase**, **Clock**, **Horizontal** and **Vertical** in menu. In certain circumstances, you can't get the best picture quality by only using auto-correction.

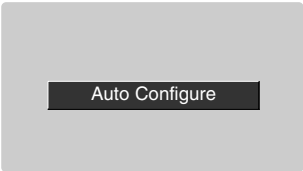

Note!

You can also use this function by using the MENU button. (Only in RGB mode)

For best results, perform this function while displaying a still image.

Using Phase Function

1. Press the **MENU** button and then use ◄, ► button to select the menu.

2. Press the ▲ , ▼ button to select **Phase** item.

3. Press the ◄, ► button to make desired adjustments.

   - **Phase** adjustment range is 0 ~31.
   - To exit the menu display, repeatedly, press the **MENU** button.
   - The variable range can be different depends on input resolutions.

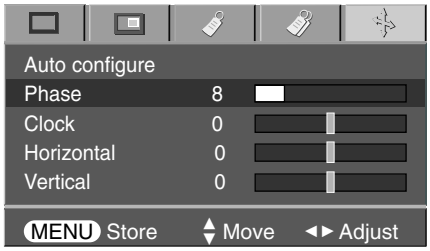

Using Clock Function

1. Press the **MENU** button and then use ◄, ► button to select the menu.

2. Press the ▲ , ▼ button to select **Clock** item.

3. Press the ◄, ► button to make desired adjustments.

   - **Clock** adjustment range is -20 ~+20.
   - To exit the menu display, repeatedly, press the **MENU** button.
   - The variable range can be different depends on input resolutions.

Using Horizontal Function

1. Press the **MENU** button and then use ◄ , ► button to select the menu.

2. Press the ▲ , ▼ button to select **Horizontal** item.

3. Press the ◄, ► button to make desired adjustments.

- **Horizontal** adjustment range is -25 ~+25.
- To exit the menu display, repeatedly, press the **MENU** button.
- The variable range can be different depends on input resolutions.

Using Vertical Function

1. Press the **MENU** button and then use ◄ , ► button to select the menu.

2. Press the ▲ , ▼ button to select **Vertical** item.

3. Press the ◄, ► button to make desired adjustments.

- **Vertical** adjustment range is -25 ~+25.
- To exit the menu display, repeatedly, press the **MENU** button.
- The variable range can be different depends on input resolutions.

Supported Monitor Display

* The following table lists the display formats supported by the projector.

Sources	Format	Vertical Freq.(Hz)	Horizontal Freq. (kHz)
EGA	640X350	70.09Hz	31.468kHz
	640X350	85.08Hz	37.861kHz
PC98	640X400	85.08Hz	37.861kHz
DOS	720X400	70.08Hz	31.469kHz
	720X400	85.03Hz	37.927kHz
VGA	640X480	59.94Hz	31.469kHz
	640X480	72.80Hz	37.861kHz
	640X480	75.00Hz	37.500kHz
	640X480	85.00Hz	43.269kHz
SVGA	800X600	56.25Hz	35.156kHz
	800X600	60.31Hz	37.879kHz
	800X600	72.18Hz	48.077kHz
	800X600	75.00Hz	46.875kHz
	800X600	85.06Hz	53.674kHz
XGA	1024X768	60.00Hz	48.363kHz
	1024X768	70.06Hz	56.476kHz
	1024X768	75.02Hz	60.023kHz
	1024X768	84.99Hz	68.677kHz
SXGA	1152X864	60.05Hz	54.348kHz
	1152X864	70.01Hz	63.995kHz
	1152X864	75.00Hz	67.500kHz
	1280X768	60.00Hz	47.693kHz
	1280X960	60.00Hz	60.000kHz
	1280X1024	60.02Hz	63.981kHz
	1280X1024	75.025Hz	79.976kHz

* In case of the use of HDMI To HDMI cable, PC shall not be supported.
* If the projector does not support the input signal, “Out of range” message appears on the screen.
* The projector supports DDC1/2B type as Plug & Play function. (Auto recognition of PC monitor)
* The Synchronization input form for horizontal and vertical frequencies are Separate.
* According to PC, the optimum vertical frequency may not be displayed up to the optimum frequency of set in ‘Registration information (Display registration information)’. (ex, The optimum vertical frequency may be displayed up to 85Hz or under in the resolution of 640X480 or 800X600.)

< DVD/DTV Input >

Signal		Component-*1	RGB(DTV)-*2	HDMI(DTV)-*3
NTSC(60Hz)	480i	O	X	X
	480p	O	O	O
	720p	O	O	O
	1080i	O	O	O
PAL(50Hz)	576i	O	X	X
	576p	O	O	O
	720p	O	O	O
	1080i	O	O	O

* Cable type
1- Component Cable
2- Computer Cable
3- HDMI Cable
* We recommend using 720p resolution.

Maintenance

* The projector needs little maintenance. You should keep the lens clean because any dirt or stains may appear on the screen. If any parts need to be replaced, contact your dealer. When cleaning any part of the projector, always turn the power off and unplug the projector first.

Cleaning the lens

Clean the lens whenever you notice dirt or dust on the surface of it. Wipe the lens surface gently with an air spray or a soft, dry lint-free cloth.

To remove dirt or stains on the lens, moisten a soft cloth with water and a neutral detergent and wipe the lens surface gently.

Cleaning the Projector Case

To clean the projector case, first unplug the power cable. To remove dirt or dust, wipe the casing with a soft, dry, lint-free cloth. To remove stubborn dirt or stains, moisten a soft cloth with water and a neutral detergent and then wipe the casing.
Do not use alcohol, benzene, thinners or other chemical detergents as these can cause the casing to be warped or discolored.

Replacing the Lamp

Last of Lamp unit replacement

The projector lamp usually lasts for about 2000 hours. You can see the used lamp time in the Selecting Function section. You must replace the lamp when:

- The projected image gets darker or starts to be deteriorated.
- The lamp indicator is red.
- The message “Replace the lamp” appears on the screen when turning the projector lamp on.

<Front panel of the Projector>

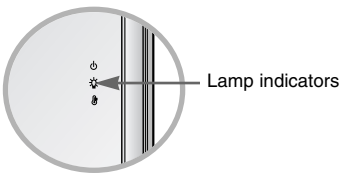

Be careful when replacing lamp

- Press the POWER button on the control panel or remote control to cut off the power.
- If the operation indicator LED is orange and blinking, do not disconnect the mains supply until the operation indicator LED is lit up constantly (orange).
- Allow the lamp to cool for 1 hour before replacing it.
- Replace only with the same type lamp from a LG Electronics Service Center using and other lamp may cause damage to the Projector and lamp.
- Pull out the lamp only when replacing the lamp.
- Keep the lamp unit out of reach of children or and heat sources such as radiators, stoves.
- To reduce the risk of fire, lamp shall not be exposed to liquids or foreign material.
- Do not place the lamp near any heat source.
- Make sure the new lamp is securely tightened with screws. If not, the image may be dark or there could be a risk of fire.
- Never touch the lamp unit glass or otherwise image quality may be worse or lamp life may be reduced.

To obtain a replacement Lamp unit

Lamp model number is on page 43. Check the lamp model and then purchase it at LG Electronics Service Center.
Using other lamp may cause damage to the projector.

Lamp unit disposal

Dispose of the used lamp by returning it to the LG electronic service center.

Replacing the Lamp

1 Turn off the projector and unplug the power cable. Carefully place the lens side down on a cushioned surface that will protect the lens from damage.

(Allow the lamp to cool for 1 hour before replacing it.)

2 Unscrew the fixing bolts of the lamp cover using a driver or a similar object.

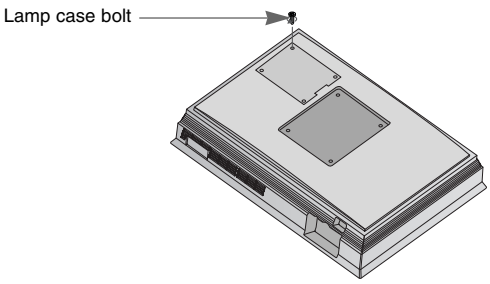

3 After lifting the lamp cover off, remove the two retaining screws on the lamp case with a screw-driver or similar objects.

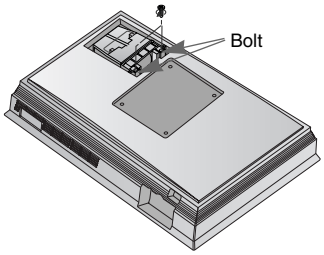

4 Lift up the fixed wire knob on the lamp.

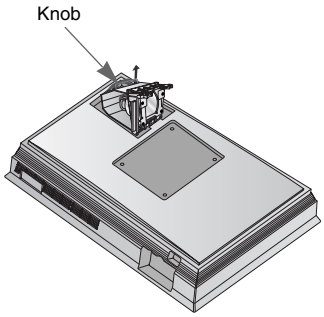

5 Pull out the handle slowly and remove the lamp case.

6 Insert the new lamp gently into the correct position. Make sure it is inserted correctly.

7 Tighten the screws you removed in step 3.

(Make sure it is fixed hardly.)

8 Close the lamp cover and fix it with the bolts from 2.

(If the lamp cover is open, the lamp indicator flashes green and the projector is not turned on.)

Note!

Using and other lamp may cause damage to the projector or lamp.
Make sure the lamp cover is securely fastened. If the lamp cover is open, and the projector is not turned on.
In this case, contact your service center after checking the lamp to fix well.

Regarding the projector lamp control

⚠ WARNING

- Don’t turn off the projector at least in 5 minutes after activating it.
  - The frequent On/Off changes may cause the lamp function to deteriorate.
- Don’t pull out the power cord while activating the projector and the cooling fan.
  - It may cause the lamp life-span to shorten and get damaged.
- The life-span of projector may considerably depend on the use environment and treatment conditions.
- The projector uses the high pressure mercury lamp so that the serious caution is essential. The shock or abuse while using may cause lamp to blow off with explosion.
- When you continue to use the projector after an interval of lamp replacement, the lamp may be blown off with explosion.
- The following treatment should be done, in case of lamp blow-off.
  - Pull off the power cord immediately.
  - Let some fresh air in immediately (Ventilation).
  - Check the product condition at the nearer service center and replace it with new lamp, if necessary.
  - Don’t try to disassemble the product without the authorized technician.

Memo

Memo

ENGLISH

Specifications

MODEL	**AN215** AN215-JD
resolution	1280(Horizontal) x 720(Vertical)pixel
horizontal / vertical ratio	16:9(horizontal:vertical)
DLP panel size	0.62 inches
screen size	1.53~11.65m(40~300 inches)
remote control distance	12m
zoom ratio	1:1.4
Video compatibility	NTSC/PAL/SECAM/NTSC4.43/PAL-M/PAL-N
Power	AC 100 - 240V~50/60Hz, 3A-1A, 260W
height(mm/inches)	285/11.3
breadth(mm/inches)	470.0/18.5
length(mm/inches)	107.8/4.3

Operating Condition

temperature

In operation : 32~104°F(0°C~40°C)
In storage and transit : -4~140°F(-20°C~60°C)

humidity

In operation : 0~ 80% relative humidity by dry hygrometer
Not in operation : 0 ~ 90% relative humidity by dry hygrometer

Projector Lamp

lamp model

AJ-LAN2

lamp power consumption

210W

LAMP Replacement

⚠ **WARNING :** Lamp is no user replaceable part. Do not touch and open the lamp replace cover of bottom enclosure. It could cause injury and electric shock due to high temperature and voltage.
Only service personnel can replace lamp after minimum 3 min. from disconnect mains plug to avoid injury cause by high temperature of lamp.
* Applicable Lamp: Manufactured by USHIO Inc., type NSH200LG

LG