myprojectorlamps.com

The most trusted, dependable name in projector lamp sales.

http://www.myprojectorlamps.com

http://www.myprojectorlamps.ca

http://www.myprojectorlamps.eu

The following projector manual has not been modified or altered in any way.

KODAK V600 Digital Projector
KODAK V600 Zoom Digital Projector
With Kodak's Exclusive Image Manager

User Guide

FCC Warning

This equipment has been tested and found to comply with the limits for a Class A digital device, pursuant to part 15 of the FCC rules. These limits are designed to provide reasonable protection against harmful interference when the equipment is operated in a commercial environment. This equipment generates, uses and can radiate radio frequency energy and, if not installed and used in accordance with the instruction manual, may cause harmful interference to radio communications. Operation of this equipment in a residential area is likely to cause harmful interference in which case the user will be required to correct the interference at his own expense.

Canada

This class A digital apparatus complies with Canadian ICES-003.

Cet appareil numérique de la classe A est conforme à la norme NMB-003 du Canada.

Safety Certifications

UL, CUL, TUV, NOM

EN 55022 Warning

This is a Class A product. In a domestic environment it may cause radio interference, in which case the user may be required to take adequate measures. The typical use is in a conference room, meeting room or auditorium.

Declaration of Conformity

Manufacturer: Eastman Kodak Company
Rochester, New York 14650 USA

We declare under our sole responsibility that the KODAK V600 Digital Projector and KODAK V600 Zoom Digital Projector conform to the following directives and norms:

Directive 89/336/EEC, Amended by 93/68/EEC
EMI: EN 55022 (1992) Class A
EMC: EN 50082-1 (1992)
IEC 801-2, IEC 801-3, IEC 801-4
Directive 73/23/EEC, Amended by 93/68/EEC
Safety: EN 60950: 1992 + A1 + A2 + A3: 1995

March, 2000

Australian Certification C-tick mark

N137

English

Table of Contents

Introduction 1
What's in the Box 1
If You Need Assistance 2
- Online Services 2
- Faxed Information 2
- Telephone Customer Support 3

Projector Features 5
Connecting the Projector 6
Starting the Presentation 7
Using the Remote Control and Keypad 9
Positioning the Projector 10
Using KODAK Image Manager 12
Adjusting the Display and Volume 13
Setting Up the Image Source 14
Selecting a Language 16
Checking the Status 17
- To reset lamp hours 17

Turning Off the Projector 18
Transporting the Projector 19
Maintenance 20
- Changing the Lamp Module 20
- Cleaning the Projection Lens 22
- Cleaning the Exterior Case 22
- Cleaning the Air Filter 23

Troubleshooting 24
- Power Indicator 24
- Image Quality 25
- Sound 28
- Remote Control 28
- Lamp 29
- Image Source 30

V600UserGuide.book Page iv Tuesday, March 21, 2000 8:26 AM

Safety. 32
Safety Definitions 32
Projector Safety 32
Battery Safety. 33
Specifications 34
Warranty 37

English

Introduction

The easy-to-use KODAK V600 Digital Projector and KODAK V600 Zoom Digital Projector offer superb image quality at an affordable price. Built into the V600/V600 Zoom Digital Projectors is Kodak's exclusive Image Manager feature. With this feature, you can select the image display setting best suited for your specific presentation material and projection environment.

In only minutes you can have your KODAK V600 Digital Projector and KODAK V600 Zoom Digital Projector ready to go. Just connect the projector to an image source such as a computer, DVD, VCR, or digital camera.

If you are familiar with connecting and using digital projectors, refer to the **Quick Start Guide** included with the projector. If not, follow the directions in this user guide to connect your projector and run your presentation.

What's in the Box

Make sure that all of the following components were included with the projector. Contact your dealer of KODAK products immediately if anything is missing.

- Soft carry case
- Lens cap
- Analog RGB (15 Pin HD) cable
- S-video cable
- Composite video cable
- Stereo audio cable – 1/8" mini-plug
- 2 Power cords - US and European
  (a UK power cord will be included where needed)
- User Manual
- Quick Start Guide
- Product registration card
- Remote control (included with V600 Zoom only)
- MACINTOSH adapter

For information on ordering projector accessories, visit our Web site at `www.kodak.com/go/projectors`.

V600UserGuide.book Page 2 Tuesday, March 21, 2000 8:26 AM

If You Need Assistance

The first place to look for help is in “Troubleshooting” on page 24. But you can also get help online, by fax, or by phone.

Online Services

Contact Kodak via:

World Wide Web	http://www.kodak.com (click on Service and Support)
America Online	(keyword) KODAK
CompuServe	GO KODAK
Kodak Internet List Server	photo-cd@info.kodak.com; or ftp.kodak.com

Faxed Information

Kodak offers automated support by fax:

U.S. and Canada	1-800-508-1531
Europe	44-0-131-458-6962
U.K.	44-0-131-458-6962

V600UserGuide.book Page 3 Tuesday, March 21, 2000 8:26 AM

English

Telephone Customer Support

If you have questions concerning the operation of your KODAK projector, you can speak directly to a customer support representative. When you call, be at the image source and projector and have the projector serial number ready.

In the U.S. and Canada call toll free:

1-800-23K-ODAK
9:00 a.m. and 8:00 p.m. (Eastern Standard Time)
Monday through Friday.

The International Toll Line is +44 (0) 131 458 6714.

In Europe call

Austria/Osterreich	01 795 67000
Germany/Deutschland	069 9509 6055
Spain/Espana	91 4069130
Belgium/Belgique	02 713 1398
Ireland/Eire	01 402 6815
Sweden/Sverige	08 587 70305
Denmark/Danmark	38 48 7088
Italy/Italia	02 696 33205
Switzerland/Schweiz/Suisse	01 838 5358
Finland/Soumi	0800 11 8043
Netherlands/Nederland	020 346 9128
UK (National Line)	0870 6061031
France	0141 918578
Norway/Norge	23 16 2041

V600UserGuide.book Page 4 Tuesday, March 21, 2000 8:26 AM

Austria/Osterreich	01 795 67000
Int. Fax Line	+44 (0) 131 458 6962

In other regions call:

Australia	613 9353-2261 Fax 613 9353-2567
Singapore/Malaysia/Indonesia/ India	65 4736 611 Fax 65 4798 397
Thailand	662 2713 040 Fax 662 6161 923
Philippines	632 8100 331 loc 223 or 416 Fax 632 8140 626
South Korea	822 7085 577 Fax 822 36721 450
HK/PRC	852 2564 9396 Fax 852 2562 4258
Taiwan	886 2-8938178 Fax 886 2-8951069

V600UserGuide.book Page 5 Tuesday, March 21, 2000 8:26 AM

English

Projector Features

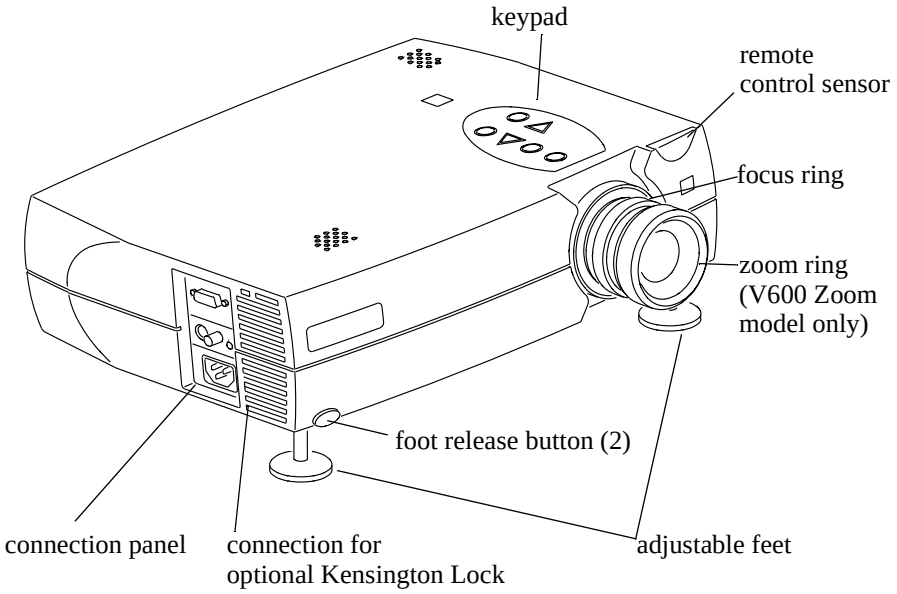

V600UserGuide.book Page 6 Tuesday, March 21, 2000 8:26 AM

Connecting the Projector

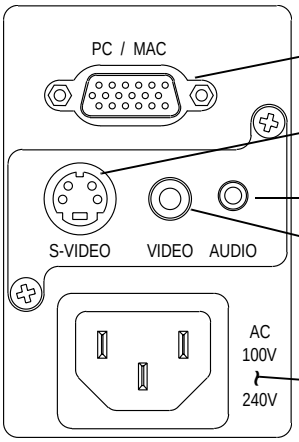

PC/MAC connection
to the computer
monitor port

S-Video
to the S-Video out port

Audio
to the source's Audio out port

Video
to the Composite video
out port

Power cord connection
to an electrical outlet

The cables are color coded to assist you with making the connections.

When you connect the power cable to the projector, the Power light on the keypad begins to blink.

You can connect more than one image source at a time. Use the Setup tab on the menu screen to select which image source you want to view. See "Setting Up the Image Source" on page 14.

If you are using an older MACINTOSH computer, you might need to use the MACINTOSH adapter that was included with your projector.

Warning:Always turn off the image source (computer or video source) and projector before connecting or disconnecting cables.

V600UserGuide.book Page 7 Tuesday, March 21, 2000 8:26 AM

English

Starting the Presentation

We recommend turning on the projector and image sources in the order listed here.

Note: You might not be using all of these components for your presentation.

- Video source such as VCR, DVD or digital camera.
- Audio source if different from your video source or computer
- Projector
- Computer

1. Connect the signal cable to the computer or video source.
2. Connect the power cord to the projector and to a power source.

   The Power light begins to blink.
3. Turn on the presentation components in the order listed.

   To turn on the projector, remove the lens cap and press the Power button on either the remote control or the keypad.

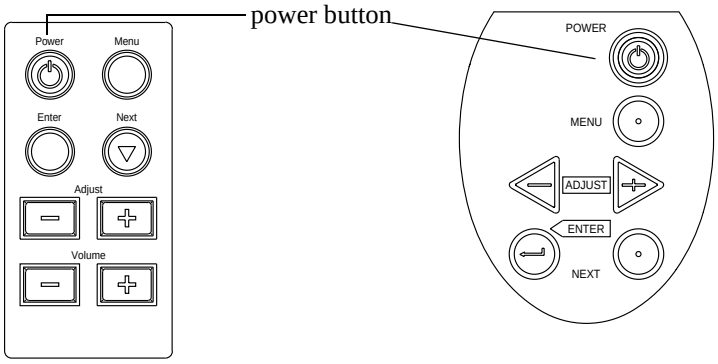

   The Power light stays a steady green when the lamp comes on.

   Either the title screen or the image from the image source appears.

Note: **Many laptop computers do not automatically turn on their external video port when another display device is connected. Refer to your computer's user guide for the function key or command that activates the port. MAC users may need to turn on SimulSCAN or monitor mirroring. Refer to the computer manual**.

V600UserGuide.book Page 8 Tuesday, March 21, 2000 8:26 AM

4. Position the projector by using the adjustable feet on the bottom of the projector. Press the foot release buttons on the front of the projector to raise or lower the feet.

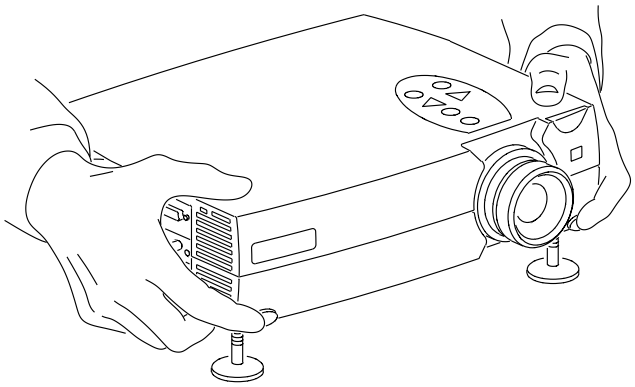

5. Turn the focus ring to focus the image and turn the zoom ring (V600 Zoom model only) to zoom in or out on the image.
6. Make any necessary image adjustments by using the on-screen menus. Press the Menu button to view the menu choices. Use the Adjust + - buttons to go to the desired tab. Press the Menu button again to dismiss the menus.

   Go to the Kodak tab to select the type of content in your presentation. See “Using KODAK Image Manager” on page 12.

   Go to the Adjust tab to adjust brightness, contrast, color (video only) and tint (video only). See “Adjusting the Display and Volume” on page 13.

   Go to the Setup tab to select the image source, type of projection, video AGC (Automatic Gain Control), video format and to adjust frequency, tracking and the image position. See “Setting Up the Image Source” on page 14.
7. Run your presentation from your computer or video source.

V600UserGuide.book Page 9 Tuesday, March 21, 2000 8:26 AM

English

Using the Remote Control and Keypad

The remote control and projector keypad perform similar operations, with one exception-the remote control has a volume control.

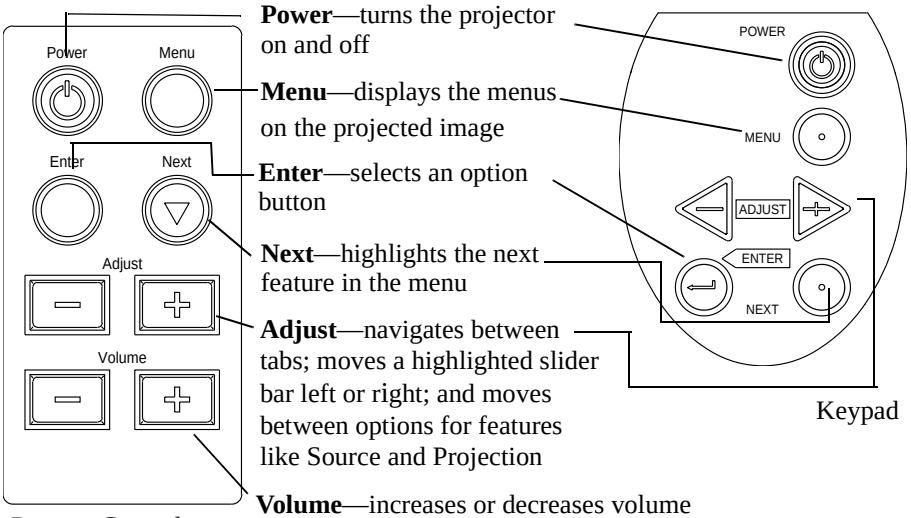

Power—turns the projector on and off

Menu—displays the menus on the projected image

Enter—selects an option button

Next—highlights the next feature in the menu

Adjust—navigates between tabs; moves a highlighted slider bar left or right; and moves between options for features like Source and Projection

Volume—increases or decreases volume

Keypad

Remote Control (Optional with V600)

Press and hold the buttons to make repeated moves and adjustments.

V600UserGuide.book Page 10 Tuesday, March 21, 2000 8:26 AM

Positioning the Projector

The projector should be at least 2.5 feet (.9 m) from the screen but no more than 32 feet (10 m) away from the screen.

V600 screen sizes are:

Distance	Width x Height	Diagonal
3’ (.9 m)	18 x 13" (.5 x .3 m)	22.5" (.6 m)
5’ (1.5 m)	31 x 23" (.8 x .6 m)	38.5" (1.0 m)
6.5’ (2.0 m)	40 x 30" (1.0 x .8 m)	50" (1.3 m)
8’ (2.4 m)	48 x 36" (1.21 x .9 m)	60" (1.5 m)
9’ (2.8 m)	56 x 42" (1.4 x 1.1 m)	70" (1.8 m)
10.5’ (3.2 m)	64 x 48" (1.6 x 1.21m)	80" (2.0 m)
12’ (3.6 m)	72 x 54" (1.8 x 1.4 m)	90" (2.3 m)
13’ (4.0 m)	80 x 60" (2.0 x 1.5m)	100" (2.5 m)
14.5’ (4.4 m)	88 x 66" (2.2 x 1.7 m)	110" (2.8 m)
16’ (4.8 m)	96 x 72" (2.4 x 1.8m)	120" (3.0 m)
17’ (5.2 m)	104 x 78" (2.6 x 2.0 m)	130" (3.3 m)
18’ (5.6 m)	112 x 84" (2.8 x 2.1m)	140" (3.6 m)
20’ (6.0 m)	120 x 90" (3.0 x 2.3 m)	150" (3.8 m)
33’ (10 m)	200 x 150" (5 x 3.8 m)	250" (6.4 m)

V600UserGuide.book Page 11 Tuesday, March 21, 2000 8:26 AM

V600 Zoom screen sizes are:

Distance	Width x Height	Diagonal
3’ (.9 m)	13~17" x 10~13" (.33~.43 x .25~.33 m)	16~21" (.4~.5 m)
5’ (1.5 m)	22~28"x 16~19" (.55~.71 x .41~.48 m)	27~35" (.7~.9 m)
6.5’ (2.0 m)	29~38"x 22~28" (.74~.97 x .56~.71 m)	36~47" (.9~1.2 m)
8’ (2.4 m)	34~46"x 26~32" (.86~1.2 x .66~.81 m)	43~57" (1.1~1.5 m)
9’ (2.8 m)	41~54"x 31~40" (1.0~1.4 x .79~1.0 m)	51~67" (1.3~1.7 m)
10.5’ (3.2 m)	46~61"x 35~46" (1.2~1.5 x .89~1.2 m)	58~76" (1.5~ 1.9m)
12’ (3.6 m)	53~69"x 40~52" (1.3~1.8 x 1.0~1.3 m)	66~86" (1.7~2.2 m)
13’ (4.0 m)	58~76" x 44~57" (1.5~1.9 x 1.1~ 1.4m)	73~95" (1.9~2.4 m)
14.5’ (4.4 m)	64~84" x 48~62" (1.6~2.1 x 1.2~1.6 m)	80~105" (2.0~2.7 m)
16’ (4.8 m)	70~91" x 53~69" (1.8~2.3 x 1.4~1.8 m)	88~115" (2.2~3.0 m)
17’ (5.2 m)	74~99" x 57~74" (1.8~2.5 x 1.4~1.9m)	95~124" (2.4~3.1 m)
18’ (5.6 m)	82~107" x 88~114" (2.0~ 2.7 x 2.2~2.9 m)	103"~134" (2.6~3.4 m)
20’ (6.0 m)	88~114" x 66 ~86" (2.2~2.9 x 1.7~2.1m)	110~143" (2.8~3.6 m)
33’ (10 m)	147~192" x 110~144" (3.7~4.9 x 2.8~3.7 m)	184~240" (4.7~6.1 m)

V600UserGuide.book Page 12 Tuesday, March 21, 2000 8:26 AM

Using KODAK Image Manager

With one click, Kodak's exclusive Image Manager lets you choose the best image settings for your presentation type.

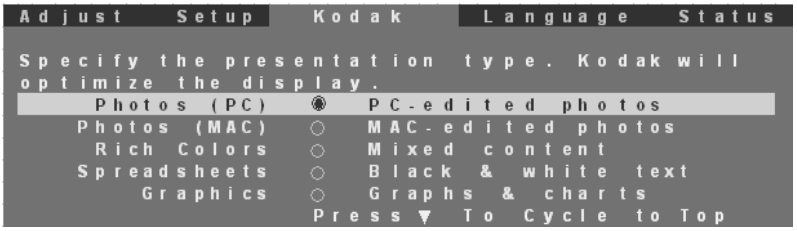

Important: *The KODAK Image Manager settings work best if you select Reset from the Adjust tab each time before selecting an Image Manager setting.*

1. Press Menu and use the Adjust + - buttons to move to the Kodak tab.
2. Press Next to move to the appropriate Image Manager feature.
3. Press Enter to select that feature.
4. Press Menu to dismiss the menu or wait for the menu to close (about 15 seconds).

Photos (PC) matches the higher contrast found on a standard PC monitor. This feature is best for:

- images created on a PC
- images from a KODAK digital camera
- a starting point for video input.

Photos (MAC) matches the lower contrast found on a standard MACINTOSH monitor. It is generally used for images created on or for a MACINTOSH. This setting also works well with a PC if you are using higher than normal contrast PC images.

Rich Colors results in an image with deep contrast and saturated vibrant colors. It is generally used under bright lighting conditions. This setting works well to enhance colors of certain graphics and it may be useful when images created for a MACINTOSH are displayed from a PC.

Spreadsheets results in an image with contrast between a PC and MACINTOSH monitor. It is generally used for text-rich tables, such as financial displays. This setting factors in ambient light, subject matter, and personal preferences to deliver the right balance of contrast and brightness.

Graphics delivers the high contrast needed to project graphics and text against solid colored backgrounds.

V600UserGuide.book Page 13 Tuesday, March 21, 2000 8:26 AM

English

Adjusting the Display and Volume

The features available on the Adjust tab depend on your image source.

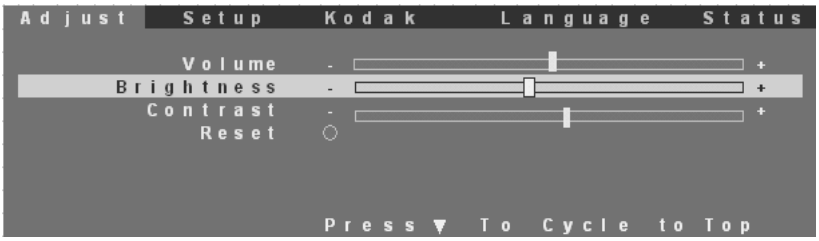

Computer Source

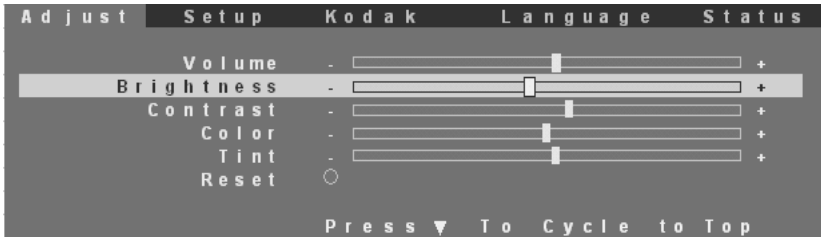

Video source

Note: We recommend using the KODAK Image Manager to optimize the display. Then, if further adjustments are needed, use the brightness and contrast settings on the Adjust tab.

1. Press Menu and use the Adjust + - buttons to move to the Adjust tab.
2. Use the Next button to move to the feature that you want to adjust.
3. Use the Adjust + - buttons to move the slider bars.

   If you wish to return to the factory default settings, use Next to highlight Reset and press Enter.

Note: The volume can also be adjusted from the remote control.

Brightness controls the intensity of the image.

Contrast controls the degree of difference between the lightest and darkest parts of the image.

Color controls the saturation of the colors.

Tint controls the red-green color balance.

V600UserGuide.book Page 14 Tuesday, March 21, 2000 8:26 AM

Setting Up the Image Source

The features that are available on the Setup tab depend on the type of image source that you are using.

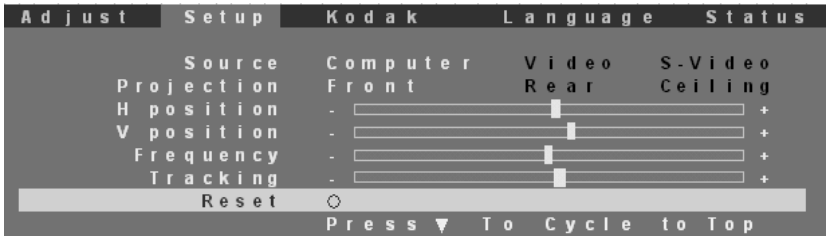

Computer Source

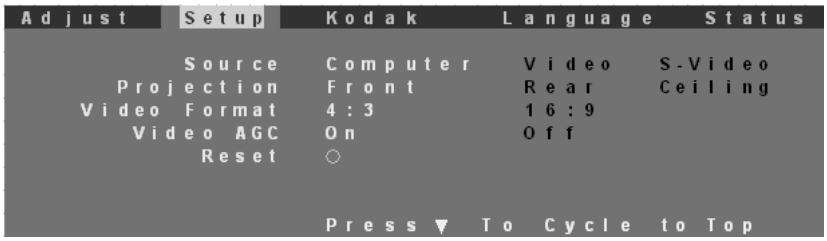

Video Source

1. Press Menu and use the Adjust + - buttons to go to the Setup tab.
2. Use the Next button to select a feature.
3. Use the Adjust + - buttons to select an option for the selected feature.

   If you wish to return to the factory default settings, use Next to highlight *Reset* and press Enter.

Source options are computer, video and S-video. When you change sources, a source status message appears indicating if the projector is receiving a signal from that source.

Signal is received:

No signal:

V600UserGuide.book Page 15 Tuesday, March 21, 2000 8:26 AM

Projection options are front, rear and ceiling.

- Front projection is used for projecting straight ahead onto a screen.
- Rear projection reverses the image if you wish to project from behind the screen.
- Use ceiling projection when you attach the projector to a permanent ceiling bracket. (To purchase the optional ceiling mount kit go to our Web site at `www.kodak.com/go/projectors`.)

H Position and *V Position* adjustments are available only for images from a computer.

Adjust *Frequency* and *Tracking* of images from a computer until the image is evenly spaced, fuzzy vertical lines disappear, or the projected image is as wide as the menu.

Video Format refers to the height and width ratio of the projected image. The 4:3 ratio is the standard format. Use the 16:9 ratio when projecting wide screen (anamorph) movies in 16:9 format.

We recommend leaving *AGC* (Automatic Gain Control) turned on. When it is turned on, the image is automatically adjusted if the video signal is too strong or too weak.

V600UserGuide.book Page 16 Tuesday, March 21, 2000 8:26 AM

Selecting a Language

The on-screen menus can be displayed in seven languages.

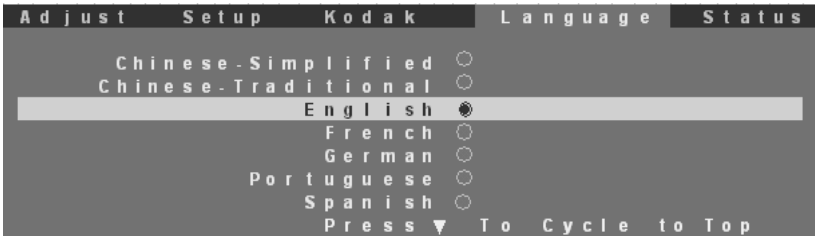

1. Press Menu and use the Adjust + - buttons to go to the Language tab.
2. Press Next to highlight the desired language.
3. Press Enter to select the language.

V600UserGuide.book Page 17 Tuesday, March 21, 2000 8:26 AM

English

Checking the Status

The information displayed on the Status tab depends on the type of image source you use.

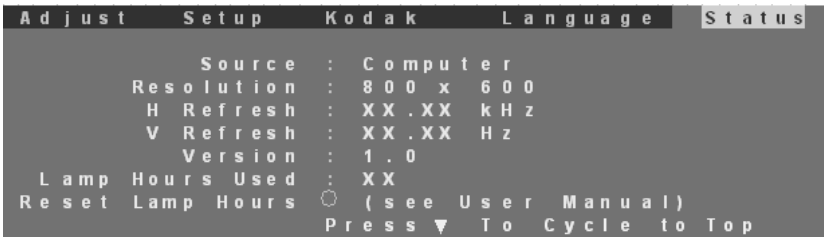

Computer Source

Video Source

The Reset Lamp Hours feature is the only item that can be adjusted on this screen. Refer to the Lamp Hours Used when you want to know how much longer your lamp will last. Estimated lamp life expectancy is 2,000 to 4,000 hours.

Important: *Only reset the lamp hours after you have installed a new lamp.*

To reset lamp hours

1. Press Menu and use the Adjust + - buttons to go to the Status tab.
2. Press Next to highlight Reset Lamp Hours.
3. Press Enter.

   The Lamp Hours Used number resets to zero.

V600UserGuide.book Page 18 Tuesday, March 21, 2000 8:26 AM

Turning Off the Projector

Turn off the projector and image sources in the order listed here.

Note: You might not be using all of these components for your presentation.

- Computer
- Projector
- Audio source if different from your video source or computer
- Video source such as VCR, DVD or digital camera.

To turn off the projector:

1. Press the Power button on the keypad or remote control.

   A confirmation screen appears.

2. Press the Power button again to confirm.

   The lamp turns off immediately but the fan continues to run until the projector cools down.

   The Power light continues to blink after the projector has cooled and as long as the live power cord is connected to the projector.

V600UserGuide.book Page 19 Tuesday, March 21, 2000 8:26 AM

English

Transporting the Projector

When you place the projector in the carrying case make sure the lens is positioned inside the lens notch of the foam insert. Secure the projector with the velcro strap.

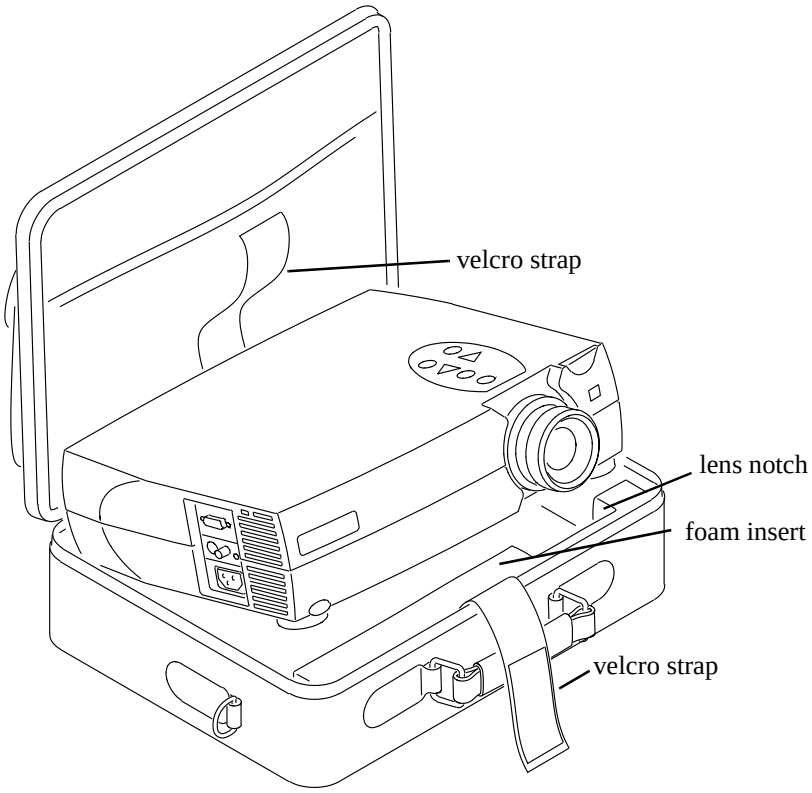

Important: *The carrying case provided with the projector is not designed to be checked through baggage. If you can not hand carry this projector make sure it is packed properly to prevent damage. The warranty does not cover damage from improper handling.*

A hard-sided case is available as an option. To purchase accessories, go to our Web site at `www.kodak.com/go/projectors`.

V600UserGuide.book Page 20 Tuesday, March 21, 2000 8:26 AM

Maintenance

Changing the Lamp Module

Important: *The lamp in the KODAK V600 Digital Projector and the KODAK V600 Zoom Digital Projector contains trace amounts of mercury. Some governments require special disposal of lamps containing mercury. Dispose of lamps in accordance with the law and any applicable local regulations.*

The lamp module should be replaced with a certified replacement part. To order a new lamp, contact your local dealer of KODAK products or visit our Web site at www.kodak.com/go/projectors

After you have changed the lamp module, make sure that you reset the lamp counter. See “To reset lamp hours” on page 17.

Warning: When replacing the lamp, be sure to turn off the power and unplug the power cord. To avoid burns, wait 30 minutes before opening the lamp module door.

Warning: When you open the lamp module door, be careful to not touch the hot surfaces inside.

Warning: Do not loosen or remove any screws other than those on the lamp module door and the lamp module. Doing so may result in electric shock.

To replace the lamp module:

1. Turn off the projector and let the projector cool for at least 30 minutes.

   The fan continues to run after the projector has been turned off.
2. Unplug the power cord from the projector.
3. Turn the projector upside down. With a flat head screw driver, loosen but do not remove the slotted screw in the lamp module door.

V600UserGuide.book Page 21 Tuesday, March 21, 2000 8:26 AM

4. Lift up on the screw side of the lamp module door. Then carefully remove the lamp module cover.

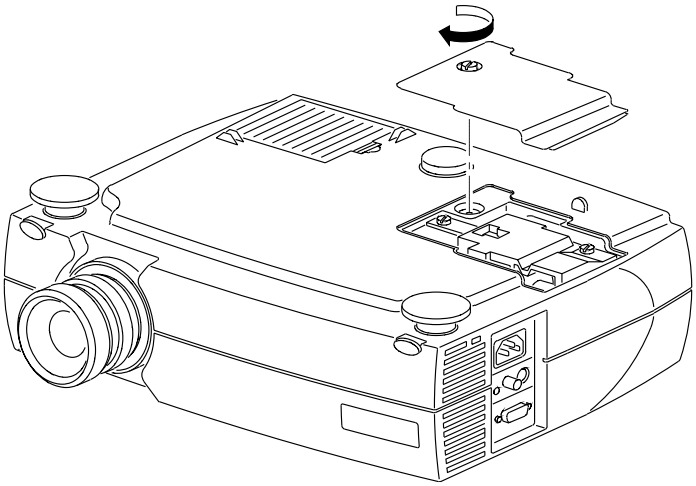

5. Loosen the two slotted screws on the lamp module bracket.

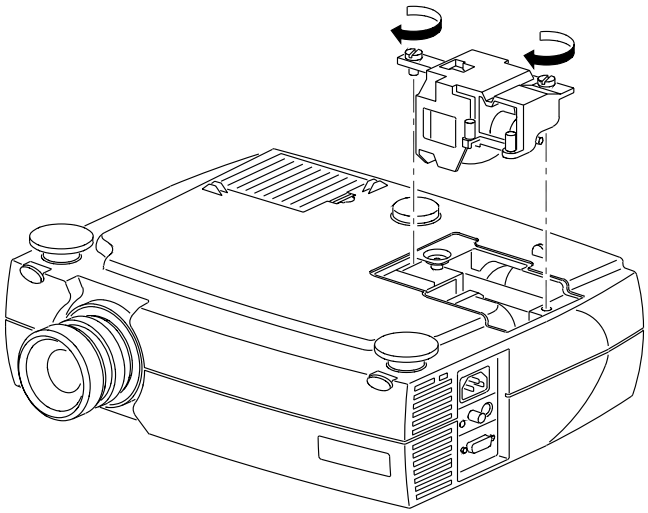

6. Gently lift and pull up on the metal wire to remove the lamp module.

Caution: Do not touch the glass portion of the new lamp module with your hands or allow it to touch other objects as this may damage it and shorten its operational life.

Caution: Do not drop the lamp module as the glass may shatter and cause injury.

V600UserGuide.book Page 22 Tuesday, March 21, 2000 8:26 AM

7. Carefully place the new lamp module into the projector, with the glass portion facing left. Make sure that it is inserted securely and that the two holes match the two pins of the inner engine case. Tighten the slotted screws.
8. Replace the lamp module door and tighten the screw.
9. Reset the lamp usage counter. See “To reset lamp hours” on page 17.

Important: *The only time that you should reset the counter is after you have replaced the lamp module.*

Cleaning the Projection Lens

1. Turn off the projector and allow it to cool.
2. Remove the lens cap.
3. Apply a non-abrasive camera lens cleaner to a soft, dry cloth.

Caution: Avoid using an excessive amount of camera lens cleaner. Do not use abrasive cleaners, solvents or other harsh chemicals as they might scratch the lens. Do not spill any camera lens cleaner on the exterior case as it may fade, deform or melt the exterior case.

4. Lightly wipe the cleaning cloth over the lens.
5. If you do not intend to use the projector immediately, replace the lens cap.

Cleaning the Exterior Case

1. Turn off the projector and allow it to cool.
2. To remove dirt or dust, gently wipe the exterior case with a soft, dry, lint-free cloth.
3. To remove stubborn dirt or stains, moisten a soft cloth with water and a neutral detergent and gently wipe the exterior case.

Caution: Do not use alcohol, benzene, thinner or o.ther chemical cleaners which may fade, deform or melt the exterior case. Do not apply the detergent solution to the projector lens as it may scratch the lens.

V600UserGuide.book Page 23 Tuesday, March 21, 2000 8:26 AM

Cleaning the Air Filter

To ensure proper ventilation inside your multimedia projector, the air filter should be periodically cleaned. More frequent cleaning may be required if you use your projector in a dusty or dirty environment.

Caution: If the air filter is not cleaned periodically, it can become clogged with dust and prevent proper ventilation. This may cause overheating and damage.

Important: *If the filter cannot be cleaned or becomes damaged or torn, it should be promptly replaced with an certified KODAK replacement part. Contact your dealer of KODAK products for additional information or visit our Web site at www.kodak.com/go/projectors*

1. Turn off the projector and wait for the fan to stop running.
2. Unplug the projector.
3. Turn the projector on its side so that the connection panel is facing upwards.

Note: Standing the projector on its side keeps dust from getting inside.

4. Locate the air filter cover on the bottom of the projector and slide the cover latch downward to remove the cover.

   The air filter is attached to the inside of the air filter cover.
5. Use a soft brush to clean the air filter being careful not to tear the filter or loosen it.

Caution: Installing a wet or damp air filter may damage your projector.

6. Replace the air filter cover on the projector. Make sure that it clicks into place.

Caution: Never replace the air filter cover without the air filter attached; this allows dust to get inside. Never operate your projector without the air filter cover in place. Doing so may damage your projector.

V600UserGuide.book Page 24 Tuesday, March 21, 2000 8:26 AM

Troubleshooting

If you don't find the answer to your problem here, visit our Web site at `www.kodak.com/go/projectors` for the latest updates on troubleshooting.

Power Indicator

The power indicator on the keypad provides you with information about the condition of the projector.

Light Status	Condition
Blinking	Lamp is off but live power cord is connected to the projector. Projector is in standby mode. OR Lamp is off and fan is running. Projector is cooling down.
Steady	Lamp is on and fan is running. Projector is ready.
Two blinks	Scaling chip is malfunctioning. Call KIC-D at 800-23kodak.
Three blinks	RAM is malfunctioning. Call KIC-D at 800-23kodak.
Four blinks	I2C bus is malfunctioning. Call KIC-D at 800-23kodak.
Five blinks	Lamp is malfunctioning. Call KIC-D at 800-23kodak.
Six blinks	Fan is malfunctioning. Call KIC-D at 800-23kodak.

V600UserGuide.book Page 25 Tuesday, March 21, 2000 8:26 AM

Image Quality

Problem	Solution
Color or text is not being projected.	Adjust the brightness up or down until the text is visible.
Some text or fonts are not sharp with a computer as an image source.	For optimal results, set the computer's resolution to 800 x 600. (Refer to your computer user manual.) But this projector can compress resolutions up to 1024 x 768.
Image isn't centered on the screen.	• Be sure that the projector is at a 90° angle to the screen. • Reposition the image. See "Setting Up the Image Source" on page 14.
Image is out of focus.	• Turn the projection lens to focus the image. • Make sure that the projection screen is at least 3 ft (.9 m) from the projector. • Check the projection lens to see if it needs cleaning.
Image and menus are upside down.	• If projecting from a ceiling mount, make sure that Ceiling Projection is selected on the Setup tab in the Menu. • If projecting from an upright position, make sure that Front or Rear projection is selected on the Setup tab in the Menu.
Image and menus are reversed from left to right.	• If projecting from behind a screen make sure that Rear Projection is selected on the Setup tab in the Menu. • If projecting in front of a screen, make sure that Front or Ceiling Projection is selected on the Setup tab in the Menu.

V600UserGuide.book Page 26 Tuesday, March 21, 2000 8:26 AM

Problem	Solution
Image appears flat with no contrast	To adjust the contrast: 1. Press Menu and use the Adjust + - buttons to go to the Adjust tab. 2. Use the Next button to highlight Contrast. 3. Use the Adjust + - buttons to increase or decrease the contrast.
Image appears washed out or dark.	• Check the projection lens to see if it needs cleaning. • To adjust the brightness: 1. Press Menu and use the Adjust + - buttons to go to the Adjust tab. 2. Use the Next button to highlight Brightness. 3. Use the Adjust + - buttons to increase or decrease the brightness.
Image is "noisy" or streaked.	• From the Setup tab in the menus, adjust the frequency and tracking manually to find an optimal setting. • Try connecting to another computer. The problem could be with your computer's video card.
Image is wider at the top or bottom of the screen.	This keystoning effect is caused by the projection angle not being perpendicular to the screen. For a more pleasing image result, raise or lower the front legs or prop up the back of the projector.
Image is wider at one side than the other	Make sure the projector is at a 90 degree angle to the screen.

V600UserGuide.book Page 27 Tuesday, March 21, 2000 8:26 AM

Problem	Solution
Projected colors don't match the computer or video source colors.	Use the KODAK Image Manager to select a setting that is more acceptable. Important: *The KODAK Image Manager settings work best if you select Reset from the Adjust Tab each time before selecting an Image Manager setting.* If further adjustment is needed, optimize the brightness, tint, color and contrast from the Adjust tab in the Menus.

V600UserGuide.book Page 28 Tuesday, March 21, 2000 8:26 AM

Sound

Problem	Cause and Solution
No sound.	• Adjust volume. • Verify audio / input connections. • Adjust audio source.
Poor sound quality.	• Make sure you are connected to the earphone jack on your laptop or line out jack on your desktop. • Make sure the volume setting on your computer is halfway.
No audio-out port on the image source.	You are not able to connect audio to the projector.

Remote Control

Problem	Cause and Solution
Projector responds poorly or not at all to the remote control.	• Make sure that the total distance from the remote to the projector is no more than 32 feet (10 m). • Point the remote control at the screen or at the front of the projector. • Make sure nothing is blocking the infrared sensor on the front of the projector. • Darken the room. The lighting might be effecting the remote control. • Replace the remote control batteries.

V600UserGuide.book Page 29 Tuesday, March 21, 2000 8:26 AM

Lamp

Problem	Cause and Solution
No light is coming from the lamp.	• Make sure that the power cord is properly connected to a fully functional AC electric outlet. The Power light blinks when the power is connected but the projector is not turned on. The Power light is a steady green when the lamp is running. • Make sure that the power cord is properly connected to the projector. • Make sure that you have removed the lens cap on the projector lens at the front of the projector. • Make sure you have pressed the Power button and the Power light is a steady green. • Check the projector's lamp to make sure that it is securely connected in the lamp module. • Make sure that the lamp module door is fully closed. • Make sure that the cable connectors do not have any bent pins. • Replace the lamp.
Lamp shuts off.	• A minor power surge may cause the lamp to shut off. Press the Power button twice to turn off the projector. (The Power light continues to blink and the fan continues to run until the projector cools down.) Wait at least three minutes, then press the Power button again. • Replace the lamp module.

V600UserGuide.book Page 30 Tuesday, March 21, 2000 8:26 AM

Image Source

Problem	Cause and Solution
The S-Video image source does not appear.	Some inexpensive cables are not compatible with the projector. Be sure to use the cable that came with your projector.
Only the start-up screen appears and not the image from the image source.	• Verify that the cables are connected correctly. See “Connecting the Projector” on page 6. • Verify that the proper image source is connected and that it is selected on the Setup tab of the menus. • Make sure that the image source is turned on. • Turn off everything and power up again in the proper order. See “Turning Off the Projector” on page 18. See “Starting the Presentation” on page 7. • Make sure that your laptop's external video port is turned on. See the computer manual for details.

V600UserGuide.book Page 31 Tuesday, March 21, 2000 8:26 AM

Problem	Cause and Solution
The image source is connected but a No Signal message appears.	• Verify that the cables are connected correctly. See “Connecting the Projector” on page 6. • Verify that the proper image source is connected and that it is selected on the Setup tab of the menus. • Make sure there are no bent pins in the connectors. • Make sure the image source is turned on. • Turn off everything and power up again in the proper order. See “Turning Off the Projector” on page 18. See “Starting the Presentation” on page 7. • Make sure that your laptop's external video port is turned on. See the computer manual for details.
MFG Mode screen appears instead of the image.	Turn off the projector and wait until the fan stops. Turn on the projector. Note: The MFG mode screen appears if you press the Power button at the same time that you plug in the power cord. This mode should only be used by service technicians.

V600UserGuide.book Page 32 Tuesday, March 21, 2000 8:26 AM

Safety

These safety precautions include information to prevent personal injury and damage to the projector.

Safety Definitions

Warning: Statements identify conditions or practices that could result in personal injury.
Caution: Statements identify conditions or practices that could result in damage to your equipment.

Warning: For information about use of a feature, please refer to this *User Guide.*

Warning: Hot surface. Do not touch.

Projector Safety

Warning: To replace the lamp, turn off the power and unplug the power cord. To avoid burns, wait 30 minutes before opening the lamp door. Follow all instructions provided in this *User Guide*. See “Changing the Lamp Module” on page 20.

Warning: When you open the lamp module door, be careful not to touch the hot surfaces inside.

Warning: Please use the power cord provided. Connect the power cord to a receptacle with a protective safety (earth) ground terminal.
Warning: Don’t look directly into the lens when the lamp is on. Doing so may cause eye injury.
Warning: Servicing your own projector may expose you to hazards or create potential hazards. Also, servicing your own projector will void the warranty. Refer all service to qualified service personnel. See “If You Need Assistance” on page 2.
Warning: In the unlikely event of the bulb rupturing, thoroughly clean the area behind the projector and discard any food that might have been contaminated with broken glass.
Warning: Do not loosen or remove any screws other than those on the lamp module door and the lamp module. Doing so may result in electric shock.
Caution: Don’t set liquids on the projector. Spilled liquids may damage your projector.
Caution: Don’t put the projector on a hot surface or in direct sunlight.
Caution: Do not drop the projector.

English

Caution: Never operate your projector without the lamp module or lamp module door. Doing so may damage the projector.
Caution: Proper ventilation is important. Don't block ventilation openings. Never operate this projector in an enclosed area. Do not place the projector on a tablecloth or other soft covering that may block the vents. With ceiling installations, use approved mounting hardware. Do not put the projector near heat ducts, air cleaners, transformers or other electrical devices. For permanent installations follow local codes.
Caution: Do not touch the glass portion of the new lamp module with your hands or allow it to touch other objects as this may damage it and shorten its operational life.
Caution: Do not drop the lamp module as the glass may shatter.

Battery Safety

- Read and follow all warnings and instructions supplied by the battery manufacturer.
- Keep batteries away from children.
- Store batteries in their original packaging.
- When inserting batteries, verify that the (+) and (-) terminals are aligned correctly.
- Replace all batteries of a set at the same time.
- Do not mix new batteries with used ones.
- Do not use batteries of different chemistries, capacities, brands or sizes together. Leakage could result.
- Do not disassemble, recharge, or short-circuit batteries.
- Do not subject batteries to high temperature or fire.
- Discard used batteries according to all applicable local and national regulations.
- In the unlikely event of contact with battery electrolyte, customers in the U.S. can contact the Kodak Information Center (KIC) at 1-800-242-2424. U.S. customers can also contact KIC for information regarding electrolyte removal from KODAK product components. Customers outside the U.S. can contact their local Kodak Customer Service representative.

V600UserGuide.book Page 34 Tuesday, March 21, 2000 8:26 AM

Specifications

Specification	V600	V600 Zoom
Weight in lbs. (kg)	7.5 (3.4)	7.6 (3.4)
Dimensions (inches) (WxDxH)	12.8 x 9.8 x 3.6 (with lens)	12.8 x 10.8 x 3.6 (with lens)
Dimensions (mm) (WxDxH)	325 x 250 x 92 (with lens)	325 x 275 x 92 (with lens)
Color Palette	16.7 million (24 bit)	16.7 million (24 bit)
Resolution	800 x 600	800 x 600
XGA compression (1024 x 768)	Yes	Yes
Three 0.9” panel polysilicone LCD	Yes	Yes
Projection lamp	120w UHP, ultra compact	120w UHP, ultra compact
Lamp life	Up to 4000 hours	Up to 4000 hours
User-replaceable lamp	Yes	Yes
Brightness (ANSI lumens - based on industry specification practices)	800	800
Contrast ratio (Full On/Off)	200:1	200:1

V600UserGuide.book Page 35 Tuesday, March 21, 2000 8:26 AM

English

Specification	V600	V600 Zoom
Projection Distances/ Image Sizes	0.9 m (2.95 ft) 0.57 m (1.875 ft) 3.66 m (12 ft) 2.29 m (7.5 ft) 10 m (32.8 ft) 6.35 m (20.6 ft)	0.9 m (2.95 ft) 0.4 m (1.33 ft) to 0.53 m (1.74 ft) 3.66 m (12 ft) 1.68 m (5.5 ft) to 2.19 m (7.17 ft) 10 m (32.8 ft) 4.67 m (15.3ft) to 6.1 m (20 ft)
Projection Lens	Fixed/manual focus	Manual zoom/focus
Zoom Factor	N/A	1.3x
Keystone Correction	10 degrees	10 degrees
Aspect Ratio	4:3, 16:9	4:3, 16:9
Audio (built in)	Stereo, 2 x 2 watts	Stereo, 2 x 2 watts
Video Compatibility – NTSC/NTSC 4.43 PAL B/D/G/H/I/K/L/N/M SECAM B/D/G/H/K/L	Yes	Yes
Computer compatibility	VGA/SVGA/XGA/ SXGA	VGA/SVGA/XGA/ SXGA
Vertical frequency (Hz)	56 – 85	56 – 85
Horizontal frequency (KHz)	30 – 90	30 – 90
MACINTOSH Compatibility	Yes	Yes
Audible noise – typical	42 measured	42 measured

V600UserGuide.book Page 36 Tuesday, March 21, 2000 8:26 AM

Specification	V600	V600 Zoom
Connections on projector		
Analog RGB (15 Pin HD)	Yes	Yes
Composite video (RCA)	Yes	Yes
Stereo Audio (1/8” mini-plug)	Yes	Yes
S-video	Yes	Yes
Power Supply		
Voltage (AC RMS)	100 - 240	100 - 240
Frequency (Hz)	50 – 60	50 – 60
Auto Sense	Yes	Yes
Typical Power Consumption (watts)	195	195
Operating Temperature Range	0 – 35 degrees C	0 – 35 degrees C
Storage Temperature Range	-20 – 70 degrees C	-20 – 70 degrees C
Humidity Range (relative)	10 – 95%	10 – 95%
Altitude (operating)	0 – 10,000 ft 0 – 3,048 m	0 – 10,000 ft 0 – 3,048 m
Altitude (storage)	0 – 40,000 ft. 0 – 12,192 m	0 – 40,000 ft 0 – 12,192 m

Warranty

WARRANTY TIME PERIOD

Kodak warrants the KODAK V600 Digital Projector and KODAK V600 Zoom Digital Projector (excluding lamps, which have an initial 90-day warranty from the date of purchase) to be free from malfunctions and defects in both materials and workmanship for two years from the date of purchase.

WARRANTY REPAIR COVERAGE

This warranty will be honored within the geographical location that the product was purchased.

If the equipment does not function properly during the warranty period due to defects in either materials or workmanship, Kodak will, at its option, either repair or replace the equipment without charge, subject to the conditions and limitations stated herein. Such repair will include all labor as well as any necessary adjustments and/or replacement parts.

If replacement parts are used in making repairs, these parts may be remanufactured, or may contain remanufactured materials. If it is necessary to replace the entire system, it may be replaced with a remanufactured system.

Kodak will also provide telephone assistance during the warranty period.

LIMITATIONS

WARRANTY SERVICE WILL NOT BE PROVIDED WITHOUT DATED PROOF OF PURCHASE.

THIS WARRANTY BECOMES NULL AND VOID IF YOU FAIL TO PACK YOUR DIGITAL PROJECTOR IN A MANNER CONSISTENT WITH THE ORIGINAL PRODUCT PACKAGING AND DAMAGE OCCURS DURING PRODUCT SHIPMENT.

THIS WARRANTY DOES NOT COVER: CIRCUMSTANCES BEYOND KODAK'S CONTROL; SERVICES OR PARTS TO CORRECT PROBLEMS RESULTING FROM THE USE OF ATTACHMENTS, ACCESSORIES, OR ALTERATIONS NOT MARKETED BY KODAK; SERVICE REQUIRED AS THE RESULT OF UNAUTHORIZED MODIFICATIONS OR SERVICE; MISUSE, ABUSE; FAILURE TO FOLLOW KODAK'S OPERATING, MAINTENANCE, OR REPACKAGING INSTRUCTIONS; OR FAILURE TO USE ITEMS SUPPLIED BY KODAK (SUCH AS ADAPTORS AND CABLES).

KODAK MAKES NO OTHER WARRANTIES, EXPRESS, IMPLIED, OR OF MERCHANTABILITY OR FITNESS FOR A PARTICULAR PURPOSE FOR THIS EQUIPMENT OR SOFTWARE.

REPAIR OR REPLACEMENT WITHOUT CHARGE ARE KODAK'S ONLY OBLIGATION UNDER THIS WARRANTY. KODAK WILL NOT BE RESPONSIBLE FOR ANY SPECIAL, CONSEQUENTIAL OR INCIDENTAL DAMAGES RESULTING FROM THE PURCHASE, USE, OR IMPROPER FUNCTIONING OF THIS EQUIPMENT REGARDLESS OF THE CAUSE. SUCH DAMAGES FOR WHICH KODAK WILL NOT BE RESPONSIBLE INCLUDE, BUT ARE NOT LIMITED TO, LOSS OF REVENUE OR PROFIT, DOWNTIME COSTS, LOSS OF USE OF THE EQUIPMENT, COST OF ANY SUBSTITUTE EQUIPMENT, FACILITIES OR SERVICES, OR CLAIMS OF YOUR CUSTOMERS FOR SUCH DAMAGES.

Depending on your geographical location, some limitations and exclusions may not apply.

Shipment of a unit from the customer to the KODAK Service Center will be at the customer's expense.

This warranty is not transferable from the original purchaser of the equipment.

HOW TO OBTAIN SERVICE

Please refer to the Service and Support section of your User's Guide for the support hotline designated to your location.

When returning a digital projector for repair, the unit shall be packed in its original packing materials. A problem report should also be enclosed with the equipment. If the original packaging has been discarded or is not available, packing will be at the owner's expense.

The repaired or replaced unit will be shipped from Kodak within five business days from the date of the digital projector receipt at the service center.

Unless a specific Kodak warranty is communicated to the purchaser in writing by a Kodak company, no other warranty or liability exists beyond the information contained above, even though defect, damage, or loss may be caused by negligence or other act.

To obtain warranty repair service contact your local Kodak representative. For assistance, refer to the Service and Support information in the KODAK Digital Projector User's Guide.

Eastman Kodak Company
343 State Street
Rochester, New York 14650

Kodak is a trademark of
Eastman Kodak Company.

PN 692934 3/2000 ©Eastman Kodak Company, 2000 Printed in Taiwan